GALFER Racing

CATALOGUE 2017

PADS - DISCS - LINES

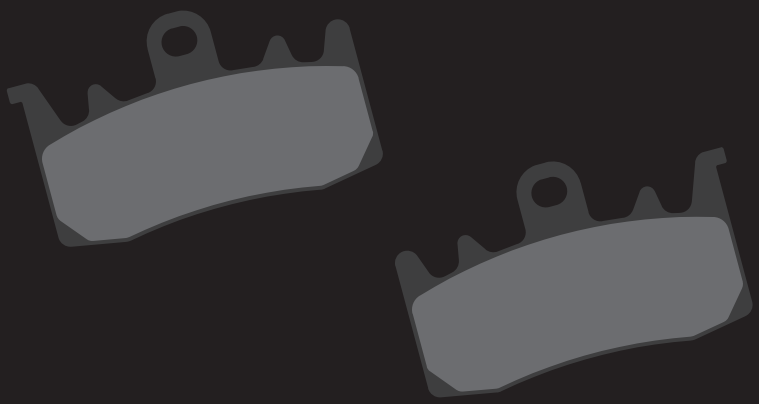

BETTER BRAKE PADS COMPOUNDS FOR COMPETITION
MEJORES COMPUESTOS DE PASTILLAS DE FRENO PARA COMPETIR

COMPOUND G1300 (2.0)

Last generation sintered compound designed for competition: Great initial deceleration with a powerful start and a progressive final braking performance. Great for riders who like a strong braking at the start and a solid lever feel. It works on all temperatures and in all conditions. These brake pads are not particularly aggressive on brake discs and offer a reduced wear level. Use in MotoGP (no carbon discs), Moto 2, Moto 3, WSBK, Superstock 1000, Supersport, etc.

Compuesto sinterizado de última generación especialmente desarrollado para competición. Gran deceleración inicial, con una entrada muy potente y un final de frenada progresivo. Muy estable durante toda la carrera. Ideal para pilotos que gustan de una enérgica frenada inicial y un tacto muy firme en la maneta. Funciona a cualquier temperatura y bajo todo tipo de condiciones. Pastilla no especialmente agresiva con el disco y con un nivel de consumo reducido. Para MotoGP (no carbon discs), Moto 2, Moto 3, WSBK, Superstock 1000, Supersport, etc.

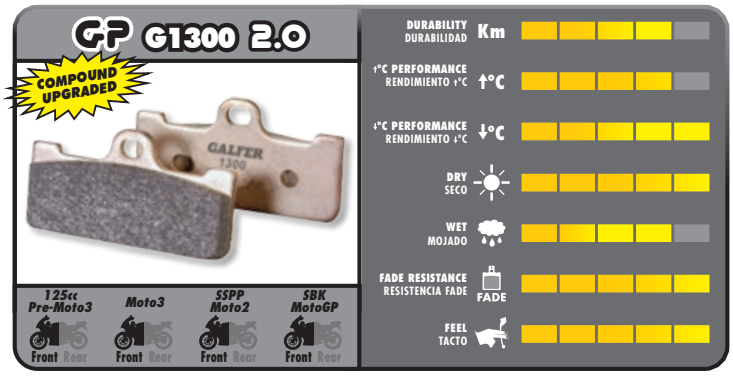

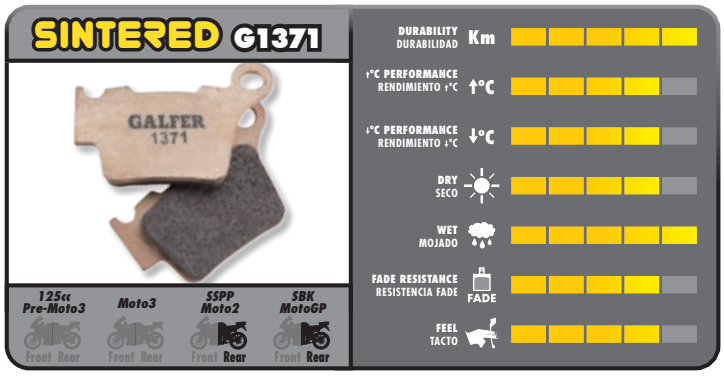

WHY DISC WAVE DESIGN?
¿PORQUÉ UN DISEÑO DE DISCO WAVE?

Disc wave — THE ORIGINAL WAVE

- **-15%** WEIGHT REDUCTION / REDUCCIÓN DE PESO
- BETTER COOLING / MEJOR REFRIGERACIÓN
- MORE BRAKING POWER / MÁS POTENCIA FRENANTE

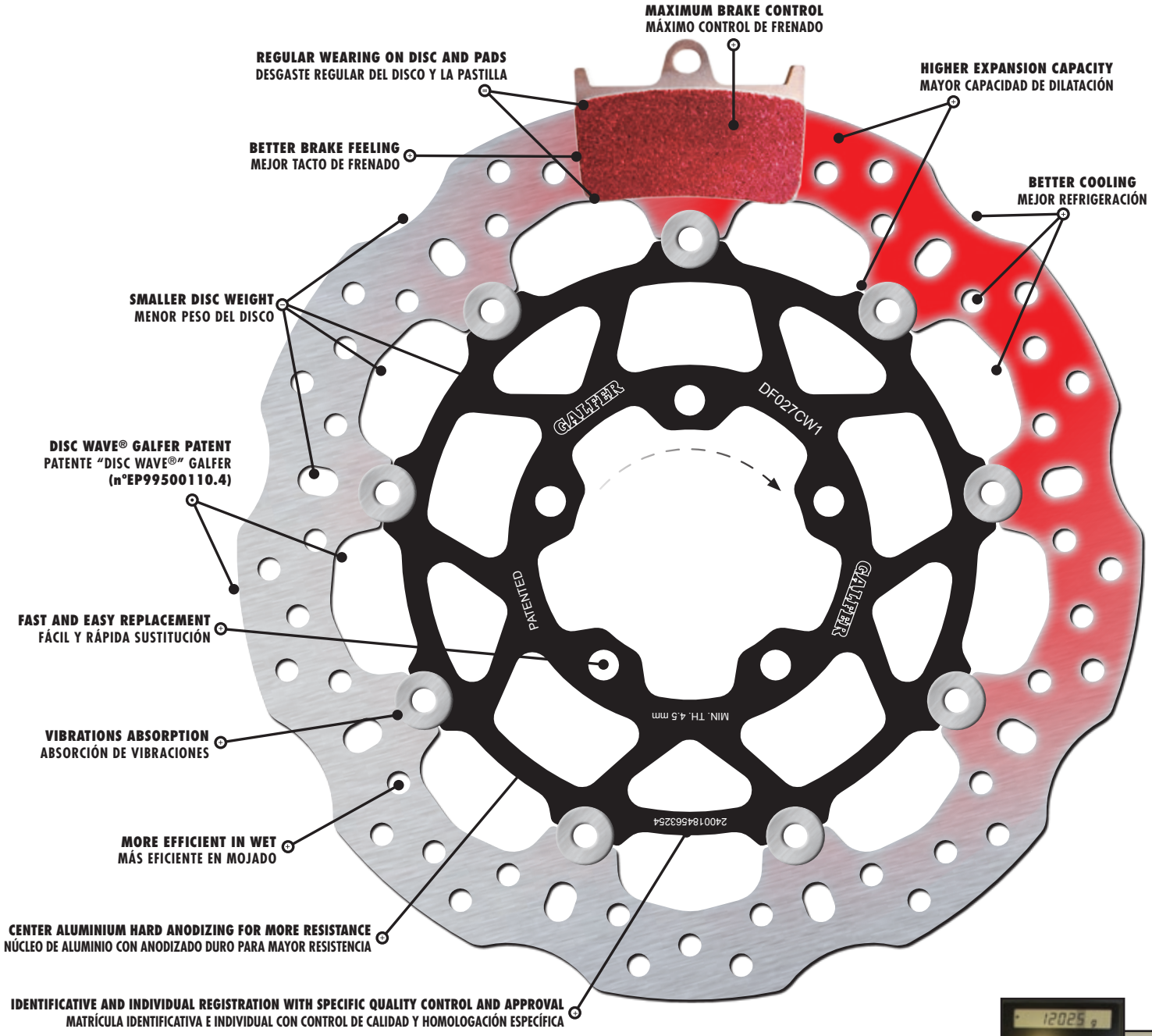

DISC WAVE® GALFER

CONSTANT POWER AND FEELING
POTENCIA Y TACTO CONSTANTES

Regular wearing on disc and pads
Desgaste regular del disco y las pastillas

Double wave perimeter, homogeneous pressure in the surface of the pads
Doble perímetro ondulado, presión homogenea en la superficie de la pastilla

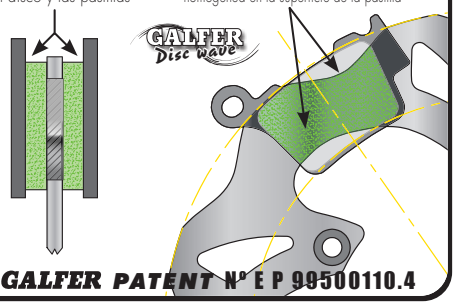

GALFER PATENT Nº E P 99500110.4

WAVE FAKE IMITATIONS

LOSS OF POWER AND FEELING
PÉRDIDA DE POTENCIA Y TACTO

Irregular wearing on disc and pads
Desgaste irregular del disco y las pastillas

Outside wave perimeter and inside circular perimeter
Perímetro exterior ondulado e interior circular

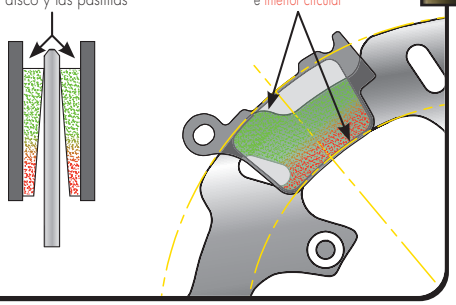

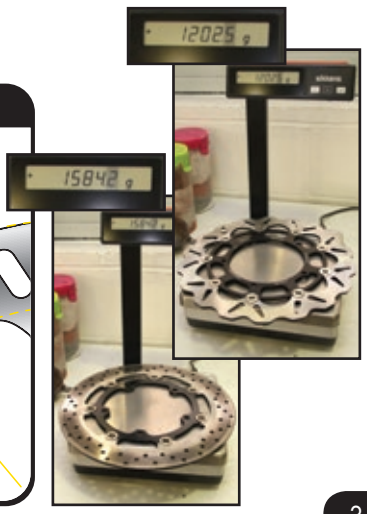

DISC REFERENCE	Ø ext	th.	Offset	Ø int	Ø ee	nº holes	Ø hole	Hole	Weight gr.	Category	Position	Brand
DF019W	187	4,0	88	88	110	3	10,5 x 12,5	Coliso	319	MOTO 3 / PRE	REAR	HONDA
DF023WMU	170	3,0	3	64	84	3	8,5		223	PRE MOTO 3	REAR	RMU
DF027CW1	296	4,5	17	58	74	6	6,5		1100	MOTO 3 / PRE	FRONT	HONDA
DF033CW1	290	4,5	17	58	74	6	6,5		1023	MOTO 3 / PRE	FRONT	HONDA
DF043W	186	3,4	3,4	88	110	3	10,5 x 12,5	Fresado	300	MOTO 3 / PRE	REAR	HONDA
DF044CW1	290	5,5	15	61	74	6	6,5		1210	MOTO 3	FRONT	KTM
DF045W	190	4,5	4,5	70	92	3	10,5	Fresado	467	MOTO 3	REAR	KTM
DF070CW1	310	5,0	12,5	94	110	6	6,5		1260	SSP	FRONT	HONDA
DF076CW1	320	5,5	15,25	94	110	6	6,5		1490	SBK	FRONT	HONDA
DF091CW1	320	5,0	15,25	74	90	6	6,5		1500	SBK	FRONT	HONDA
DF095CW1	296	4,5	4,5	60	80	6	8,5		1100	85cc	FRONT	BEON
DF096FLW1	195	3,5	3,5	88	110	3	10,3		615	85cc	REAR	BEON
DF100CW1	218	4,0	8	60	80	3	8,5		580	MOTO 3	FRONT	HONDA
DF101CW1	190	4,0	5	70	92	3	10,3	Fresado	420	MOTO 3	REAR	HONDA
DF102CW1	218	4,0	8	60,1	80	3	9,9	Fresado	580	MOTO 3	FRONT	KTM
DF103W1	187	3,5	88	88	110	3	10,5 x 12,5	Coliso	260	MOTO 3	REAR	MAHINDRA
DF104CW1	218	4,0	6	60	80	6	8,5	Fresado	580	MOTO 3	FRONT	TM RACING
DF105CW1	190	4,0	5	70	92	3	8,5	Fresado	420	MOTO 3	REAR	TM RACING
DF110CW1	290	60		12,5	80	6	8,3		1154	MOTO 2	FRONT	KALEX/SUTER
DF111CW1	217,75	4,5	10,25	69	86	3	8,3		680	MOTO 2	REAR	KALEX
DF112CW1	310	5,5	17	69	86	6	8,3		1160	MOTO 2	FRONT	TECH 3
DF113CW1	217,75	4,0	10	70	90	3	8,3		550	MOTO 2	REAR	SUTER
DF184CW2	300	5,8	80	80	100	5	10,5		1445	SSP	FRONT	KAWASAKI
DF193WAR	220	4,0	5	100	120	4	10,5		495	SSP / SBK	REAR	KAWASAKI
DF194CW2	330	5,8	5	80	100	5	10,5		1700	SBK	FRONT	KAWASAKI 2016
DF211CW1	330	5,8	12,4	70	90	5	10,6		1700	SBK	FRONT	KAWASAKI 2017
DF325CW1	320	5,0	5	102	120	6	8,2		1358	SBK	FRONT	SUZUKI 2017
DF348CW1	310	5,0	5	100	120	5	10,5		1250	SSP	FRONT	SUZUKI
DF358CW1	310	5,0	5	102	120	6	10,5		1275	SSP	FRONT	SUZUKI
DF358CW2	310	5,0	5	102	120	6	10,5		1425	SSP	FRONT	SUZUKI
DF370W	220	5,0	5	110	131	5	10,5	Fresado	662	SBK	REAR	SUZUKI 2017
DF475CW1	320	5,5	5,5	132	150	5	8,5		1419	SBK	FRONT	YAMAHA
DF482CW1	310	5,0	132	132	150	5	10,5		1200	SSP	FRONT	YAMAHA
DF755CW1	320	6,0	5	179	203	5	8,5		1410	SBK	FRONT	BMW
DF756W	220	5,0	5	119,5	135	5	6,6		615	SBK	REAR	BMW
DF817CW1	320	5,5	5	64	80	6	8,5		1450	SBK	FRONT	BMW
DF830CW1	320	5,0	5	80	102	5	8,5	Fresado	1380	SSP	FRONT	MV AUGUSTA
DF883CW2	320	5,5	10	64	80	6	8,5		1579	SBK	FRONT	APRILIA 2016
DF906CW1	310	5,0	5,0	83	100,5	5	10,5		1350	SSP	FRONT	TRIUMPH
DF952CW1	330	5,5	10,25	64	80	6	8,5		1477	SBK	FRONT	APRILIA 2017

Sizes in milimeters (mm) | Medidas en milimetros (mm)

Date: 10-10-2017

INDUSTRIAS GALFER, S.A. c/ctra. de Montmeló, 50 · 08403 Granollers · BARCELONA (E) · P. I. Circuit de Catalunya · Tel: +34 93 568 90 90 · info@galfer.es · www.galfermoto.com

CATEGORY	BRAND & MODEL	YEAR MODEL	FRONT			REAR	
			PADS (FD)	No.DF	DISCS (DF)	PADS (FD)	DISCS (DF)
85cc	BEON	17-		1	DF095CW1		DF096FLW1
PRE MOTO3	RMU	13-	FDP14002G1038	1	DF027/033CW1	FD224G1054	DF023W00MU
	BEON	13-	FD262G1375	1	DF027/033CW1	FD224G1054	DF043W
	MORIWAKI	13-	FD331G1300	1	DF027/033CW1	FD224G1054	DF019W
MOTO3	HONDA NSF 250 R (1 disc front)	12-	FD331G1300	1	DF027/033CW1	FD113G1054	DF019W
	KTM (1 disc front)	13-	FD168G1300	1	DF044CW1	FD441G1396	DF045W
	HONDA SUTER (2 discs front)	13-	FD391G1300	2	DF100CW1	FD113G1054	DF101CW1
	KTM (2 discs front)	13-	FD391G1300	2	DF102CW1	FD181G1054	DF101CW1
	MAHINDRA	13-	consult	2	DF100CW1	consult	DF103W1
	TM RACING	17-	consult	2	DF104CW1	consult	DF105CW1
SUPERSPORT 300	YAMAHA R-3	15-	FD485G1370	1	DF460CW1	FD484G1370	DF461W
	KAWASAKI NINJA 300R	13-	FD117G1375	1	DF205CW1	FD117G1370	DF206W
	KTM 390 DUKE	14-	FD450G1375	1	DF800CW	FD165G1371	DF790W
	HONDA CBR 500R	13-	FD266G1375	1	DF080W	FD103G1371	DF081W
MOTO2	KALEX	14-	FD478G1300	2	DF110CW1	FD181G1054	DF111CW1
	SUTER	14-	FD478G1300	2	DF110CW1	FD181G1054	DF113CW1
	MISTRAL 610 (TECH3)	14-	FD478G1300	2	DF112CW1	FD181G1054	consult
SUPERSPORT 600	YAMAHA R-6	05-16	FD178G1300	2	DF482CW1	FD134G1371	DF496W
	YAMAHA R-6	17-	FD178G1300	2	DF475CW1	FD134G1371	DF496W
	HONDA CBR 600 RR	07-	FD326G1300	2	DF070CW1	FD363G1371	DF013W
	KAWASAKI ZX6R	05-	FD371G1300	2	DF184CW2	FD167G1371	DF193W
	SUZUKI GSXR 600R	08-	FD325G1300	2	DF358CW1/2	FD363G1371	DF339W
	MV AUGUSTA F3 / BRUTALE (675/800cc)	11-	FD176G1300	2	DF830CW1	FD220G1371	DF831W
	TRIUMPH DAYTONA 675 R	13-	FD373G1300	2	DF906CW1	FD103G1371	DF907W
SUPERBIKE	KAWASAKI ZX10R	16	FD373G1300	2	DF194CW2	FD363G1371	DF193WAR
	KAWASAKI ZX10R	17-	FD373G1300	2	DF211CW1	FD363G1371	DF193WAR
	HONDA CBR 1000 RR SP	13-16	FD373G1300	2	DF076CW1	FD363G1371	DF013W
	HONDA CBR 1000 RR SP	17-	FD373G1300	2	DF091CW1	FD363G1371	DF013W
	BMW HP4	12-	FD373G1300	2	DF817CW1	FD165G1371	DF756W
	BMW S 1000 RR	09-	FD437G1300	2	DF755CW1	FD165G1371	DF756W
	SUZUKI GSX R 1000	12-16	FD373G1300	2	DF358CW1/2	FD363G1371	DF339W
	SUZUKI GSX R 1000	17-	FD373G1300	2	DF325CW1	FD363G1371	DF370W
	YAMAHA YZF R-1 / R-1 M	15-	FD178G1300	2	DF475CW1	FD363G1371	DF496W
	APRILIA RSV4 RR	15-16	FD373G1300	2	DF883CW2	FD220G1371	DF669W
	APRILIA RSV4 RR	17-	FD373G1300	2	DF952CW1	FD220G1371	DF669WA

Date: 10-10-2017

INDUSTRIAS GALFER, S.A. c/ctra. de Montmeló, 50 · 08403 Granollers · BARCELONA (E) · P. I. Circuit de Catalunya · Tel: +34 93 568 90 90 · info@galfer.es · www.galfermoto.com

GALFER FD 068

G1003
G1300

mm 69,6 x 51,0
8,2

A | A

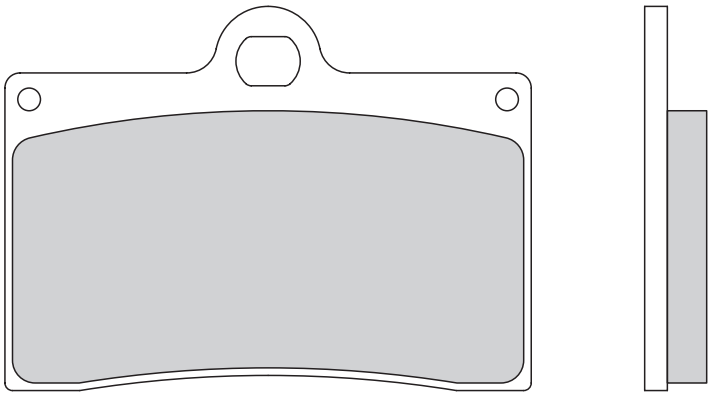

GALFER FD 103

G1371

mm 86,0 x 40,2
10,6

A | A[1]

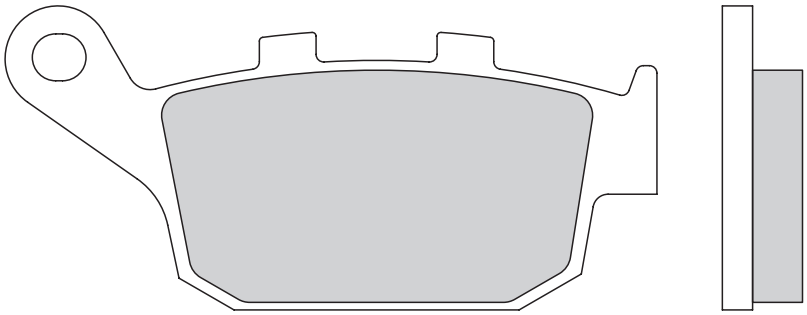

FD457 (th. 9,0mm) can replace **FD103** (not vice versa) | **FD457** (th. 9,0mm) puede sustituir **FD103** (no al revés)

GALFER FD 113

G1054

mm 52,0 x 36,6
8,3

A | A

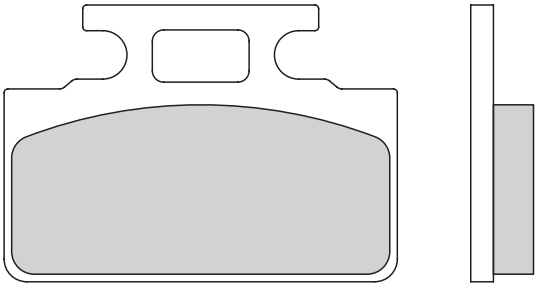

GALFER FD 117

G1370
G1375

mm 77,4 x 42,3
7,7

A | B

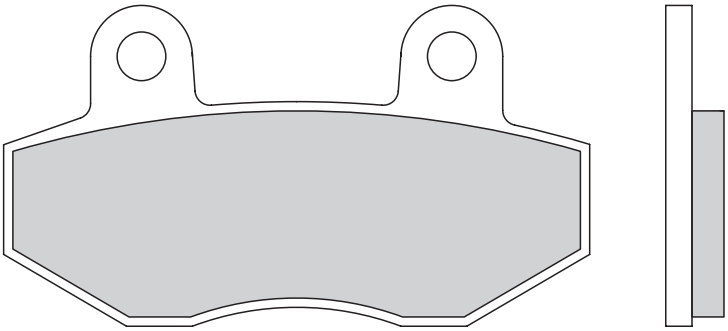

A B

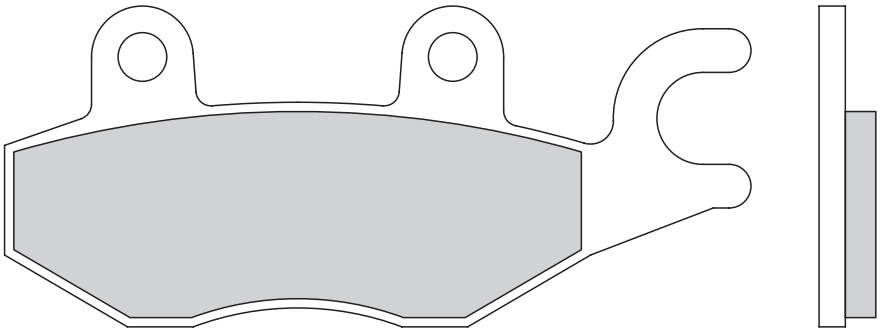

mm 98,8 x 42,4
7,5

A A1

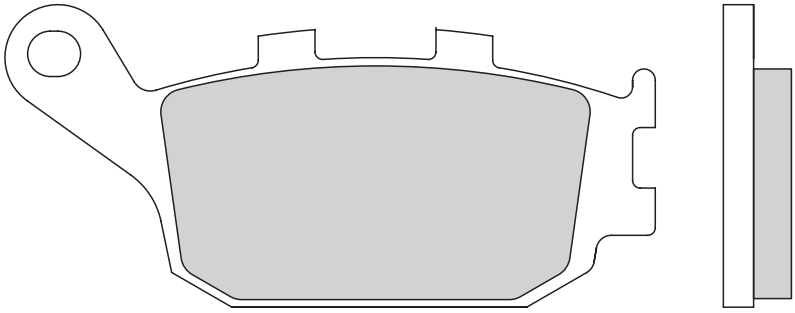

GALFER FD 134 G1371

mm 86,0 x 36,7
9,0

A A1

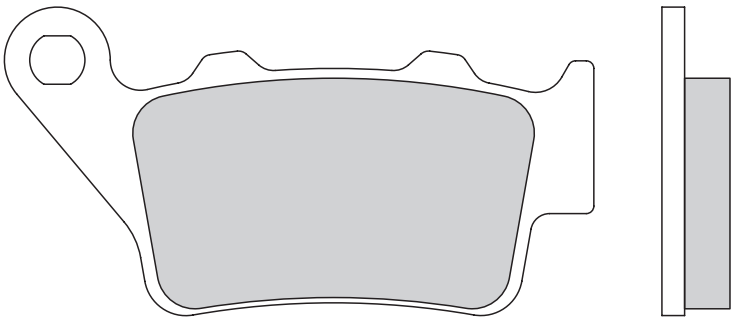

GALFER FD 165 G1371

mm 78,0 x 40,8
9,0

A B

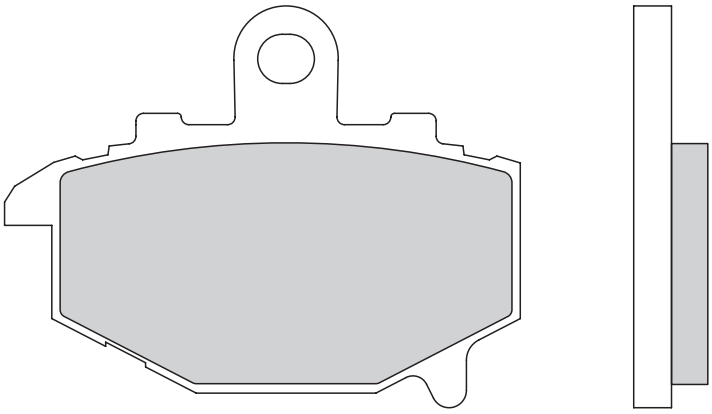

GALFER FD 167 G1371

mm 68,2 x 53,1
9,8

mm 89,4 x 51,2
8,8

A B

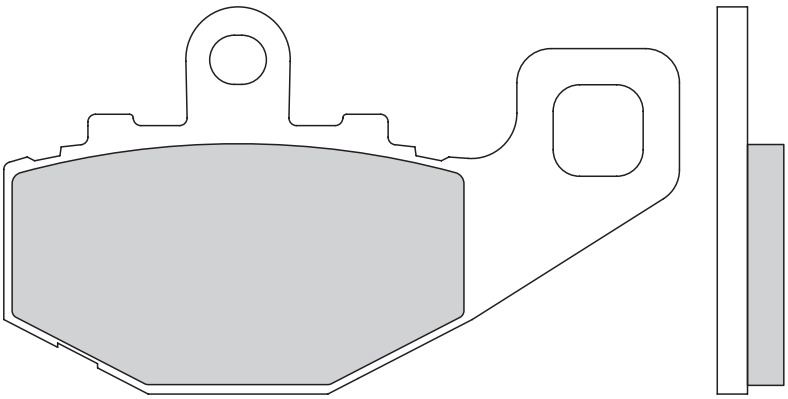

GALFER
FD 168 G1003

mm 77,4 x 42,8
8,4

A A

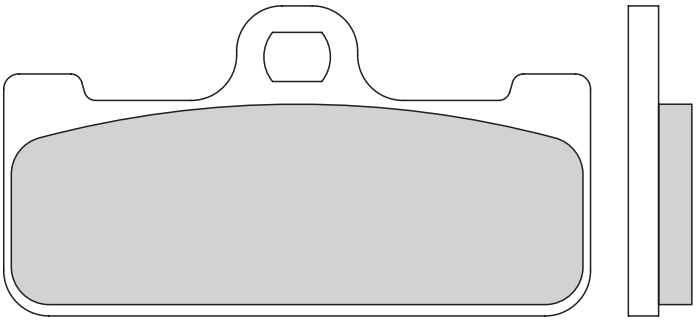

GALFER
FD 176 G1300

mm 75,0 x 55,5
8,7

A A

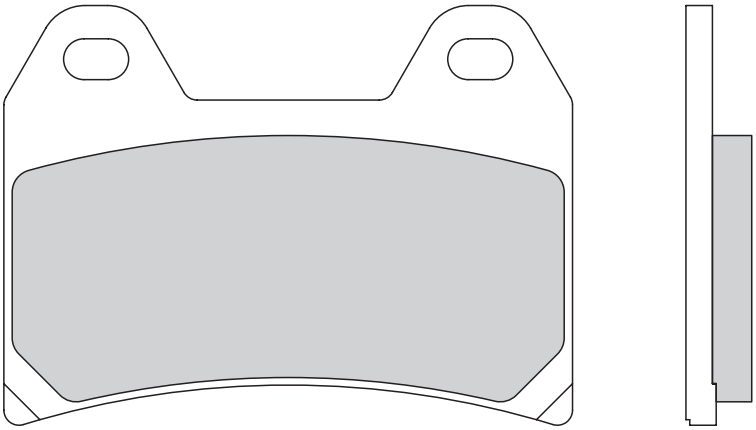

GALFER
FD 178 G1300 G1003

mm 69,0 x 50,6
8,8

A A

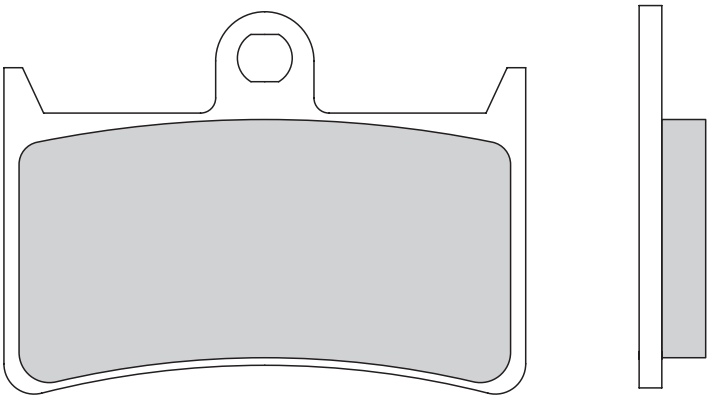

FD068 (th. 8,2mm) replace **FD178** in **G1003** compound (not vice versa) | **FD068** (th. 8,2mm) sustituye a **FD178** en compuesto **G1003** (no al revés)

A A

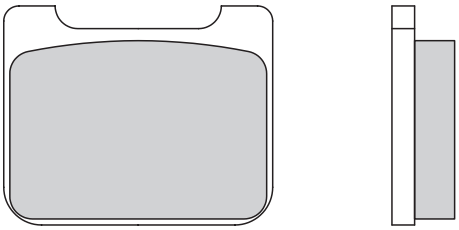

GALFER
FD
181
G1054

mm 35,6 x 29,0

8,3

A A

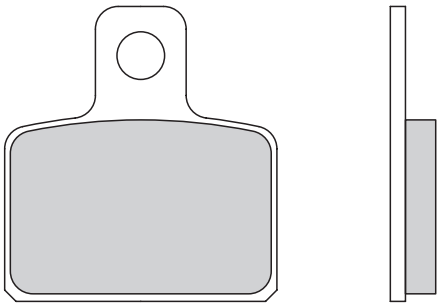

GALFER
FD
224
G1054

mm 36,0 x 39,0

6,0

A A[1]

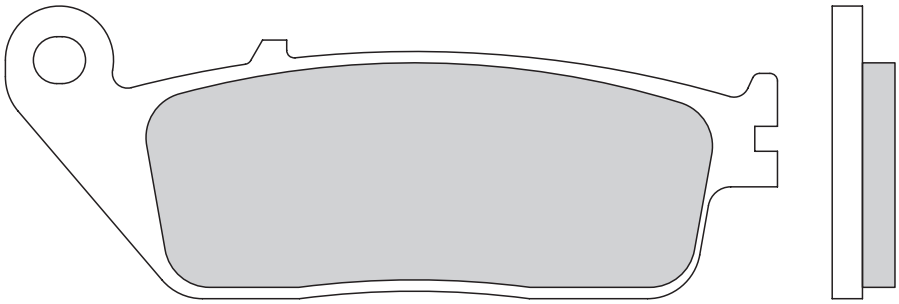

GALFER
FD
266
G1375

mm 102,1 x 38,7

8,3

A A

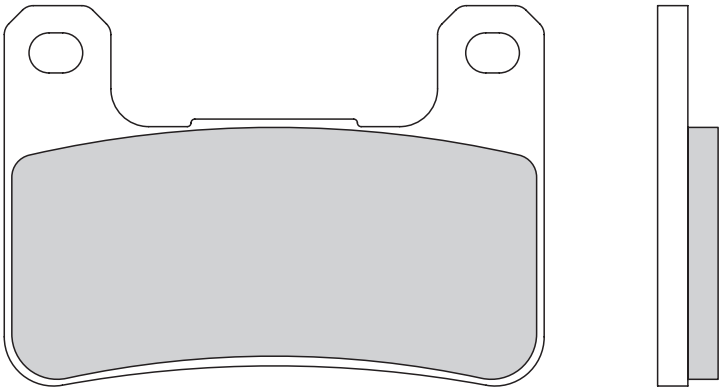

GALFER
FD
325
G1300
G1003

mm 71,4 x 50,0

8,0

GALFER FD 326 G1003

mm 74,3 x 47,1

7,9

A | A

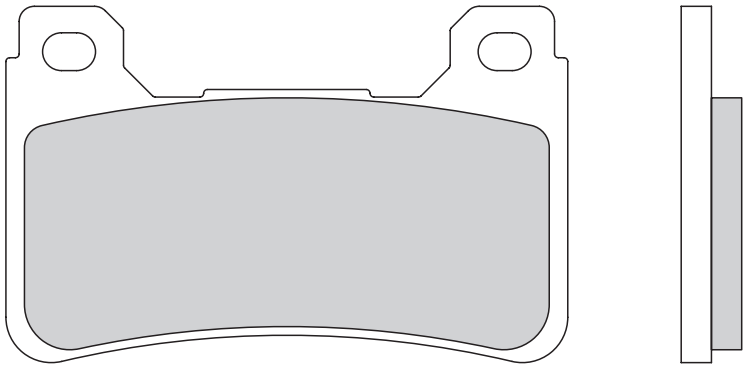

GALFER FD 363 G1371

mm 77,5 x 42,1

10,4

A | A[1]

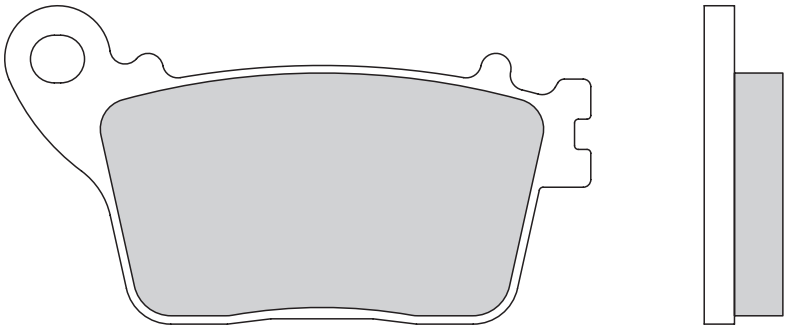

GALFER FD 365 G1300

mm 30,9 x 48,0

8,5

mm 61,9 x 44,8

8,5

A | B
2x

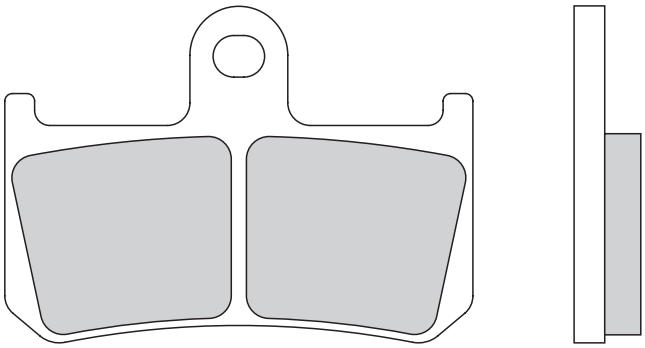

A | B
2x

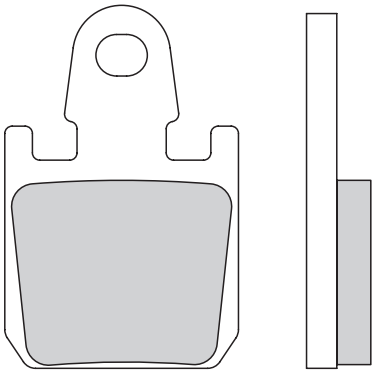

A A
4x

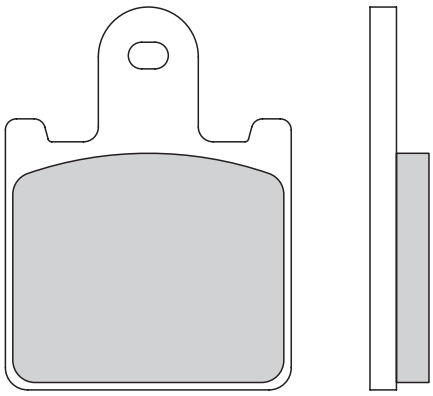

GALFER FD 371
G1300
G1003

mm 37,7 x 49,9
7,8

FD290 (th. 9,0mm) can replace **FD371** but without mounting springs (not vice versa) | **FD290** (th. 9,0mm) puede sustituir **FD371** pero sin el montaje de los muelles (no al revés)

A A

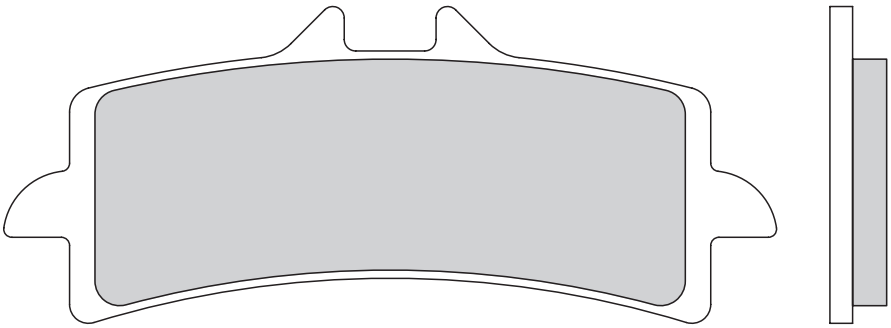

GALFER FD 373
G1300
G1003

mm 102,2 x 41,9
7,5

A A

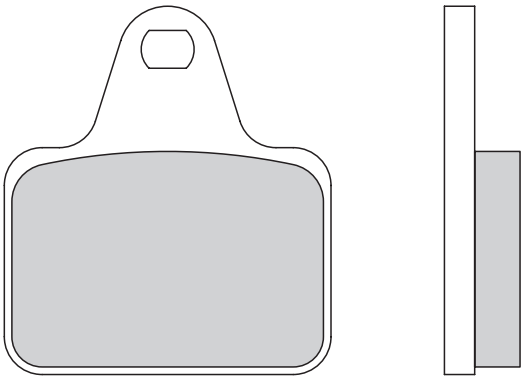

GALFER FD 391
G1003

mm 43,2 x 48,7
10,0

A A
4x

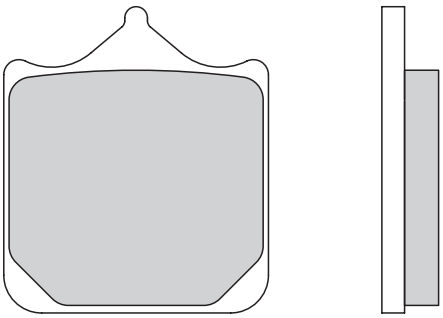

GALFER FD 437
G1300
G1003
G1375

mm 35,0 x 40,5
9,0

GALFER FD 450 G1375

mm	69,5 x 45,2
	8,8

A | A

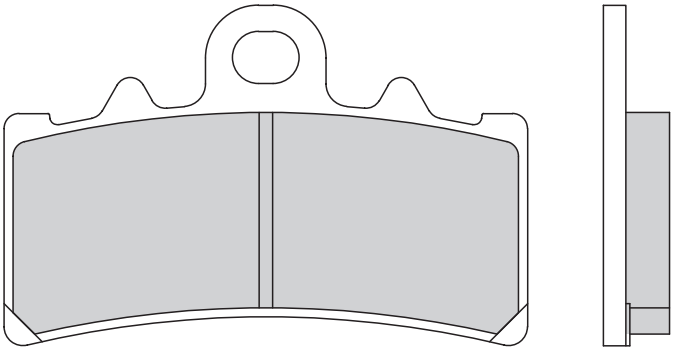

GALFER FD 485 G1370

mm	99,0 x 44,8
	8,5
mm	113,3 x 54,9
	8,5

A | B

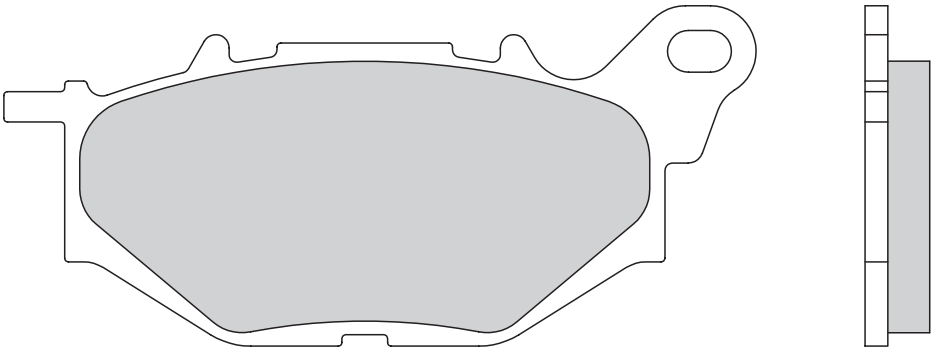

A | B

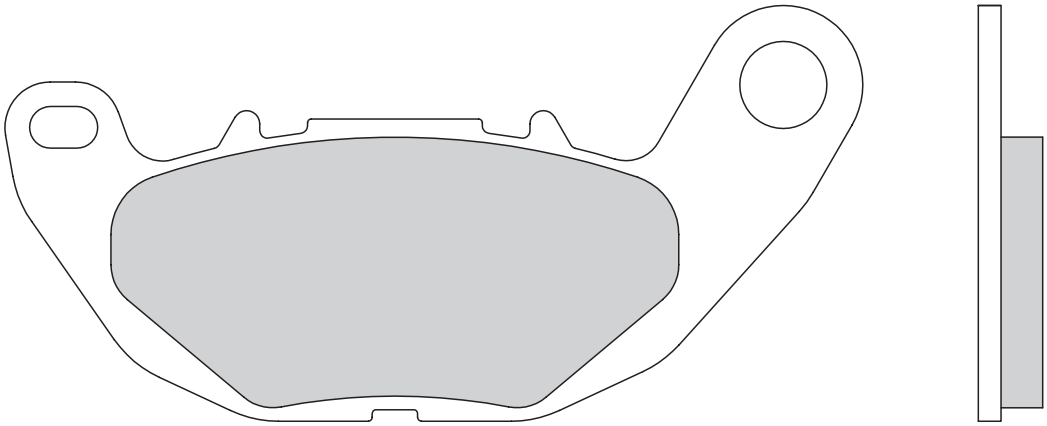

GALFER FD 478 G1003 G1300

mm	82,0 x 28,7
	9,5

A | A

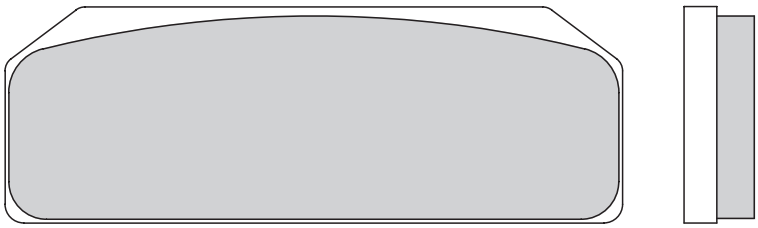

A B

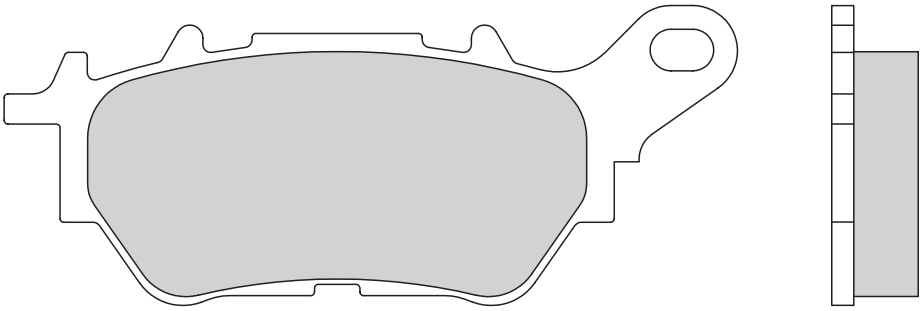

GALFER
FD
484
G1370

mm 97,0 x 39,7

11,5

A B

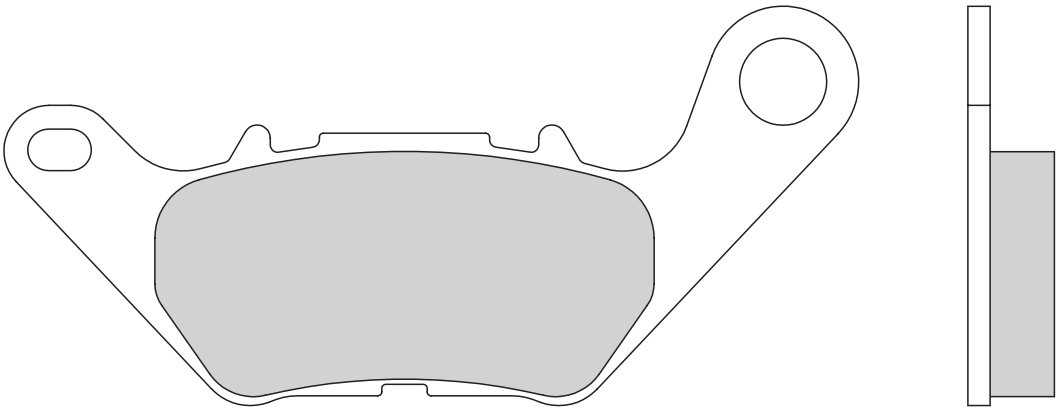

mm 113,0 x 52,8

11,5

A A

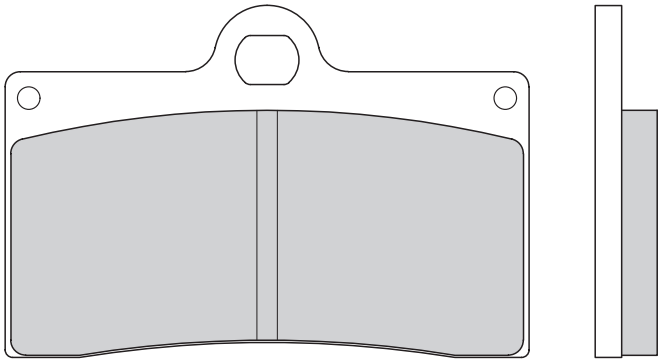

GALFER
FD
507
G1010

mm 69,5 x 46,7

8,2

A A

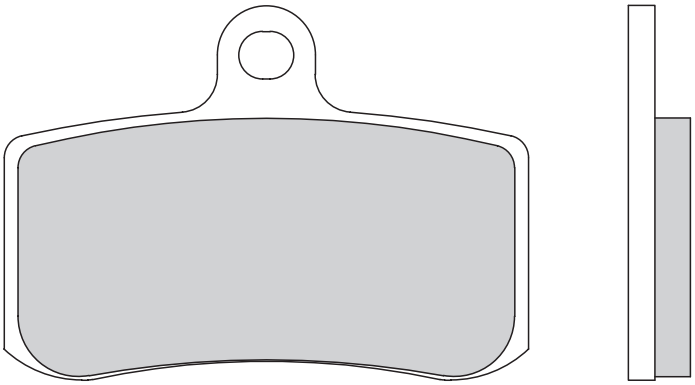

GALFER
FDP
14002
G1038

mm 69,5 x 49,6

8,2

GALFER DF 013 W

øext.	220 mm
øint.	105
	5,0

678 gr

GALFER DF 043 W

øext.	186 mm
øint.	88
	3,4

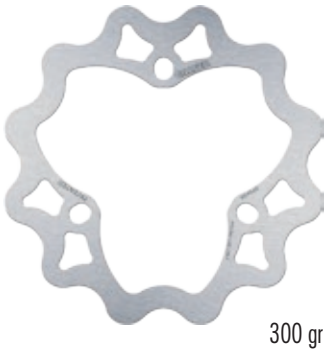

300 gr

GALFER DF 076 CW1

øext.	320 mm
øint.	94
	5,5
	15,25

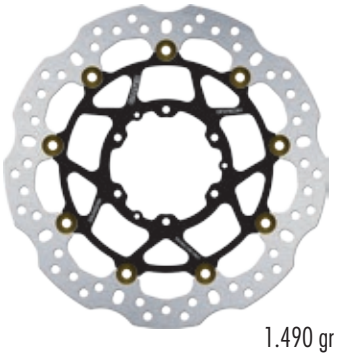

1.490 gr

GALFER DF 019 W

øext.	187 mm
øint.	88
	4,0

319 gr

GALFER DF 044 CW1

øext.	290 mm
øint.	61
	5,5
	15

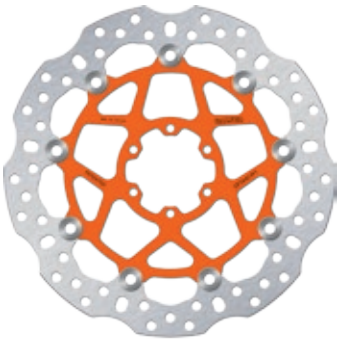

1.210 gr

GALFER DF 080 W

øext.	320 mm
øint.	211
	5,0

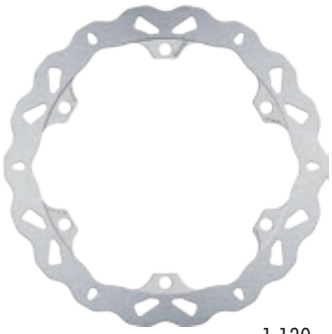

1.130 gr

GALFER DF 023 WOOMU

øext.	170 mm
øint.	64
	3,0

223 gr

GALFER DF 045 W

øext.	190 mm
øint.	70
	4,5

476 gr

GALFER DF 081 W

øext.	240 mm
øint.	116,5
	5,0

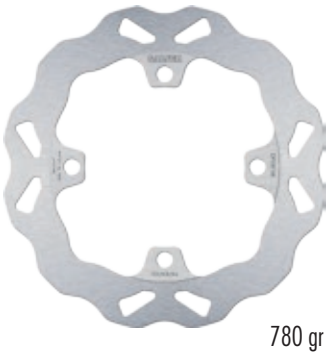

780 gr

GALFER DF 027 CW1

øext.	296 mm
øint.	58
	4,5
	17,0

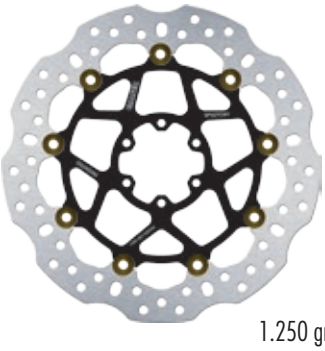

1.250 gr

GALFER DF 048 W

øext.	220 mm
øint.	105
	4,2

477 gr

GALFER DF 091 CW1

øext.	320 mm
øint.	74
	5,0
	15,25

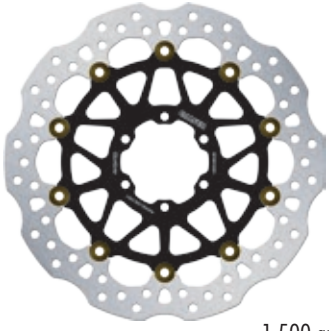

1.500 gr

GALFER DF 033 CW1

øext.	290 mm
øint.	58
	4,5
	17,0

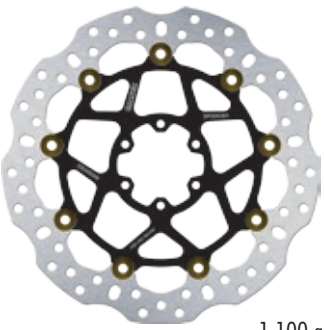

1.100 gr

GALFER DF 070 CW1

øext.	310 mm
øint.	94
	5,0
	12,5

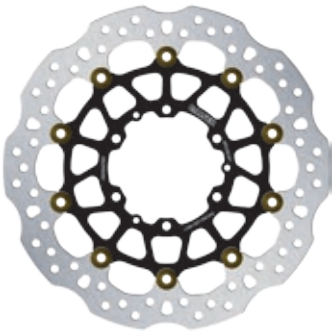

1.400 gr

GALFER DF 095 CW1

øext.	296 mm
øint.	60
	4,5
	6,0

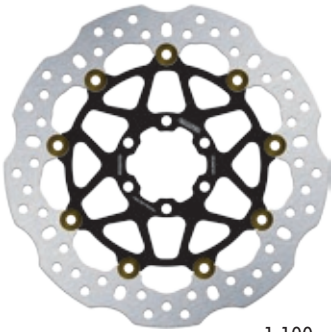

1.100 gr

GALFER DF 096 FLW1

øext.	195 mm
øint.	88
	3,5
	0,0

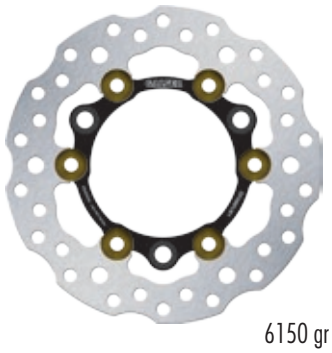

6150 gr

GALFER DF 104 CW1

øext.	218 mm
øint.	60
	4,0
	6,0

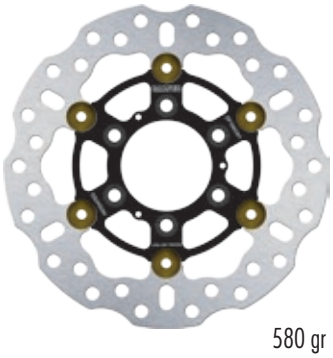

580 gr

GALFER DF 113 CW1

øext.	218 mm
øint.	70
	4,0
	10,0

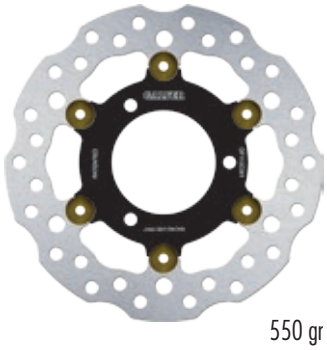

550 gr

GALFER DF 100 CW1

øext.	218 mm
øint.	60,1
	4,0
	6,0

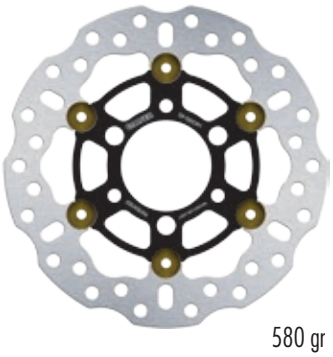

580 gr

GALFER DF 105 CW1

øext.	190 mm
øint.	70
	4,0

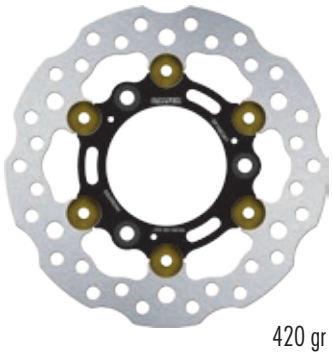

420 gr

GALFER DF 184 CW2

øext.	300 mm
øint.	80
	5,8
	0,0

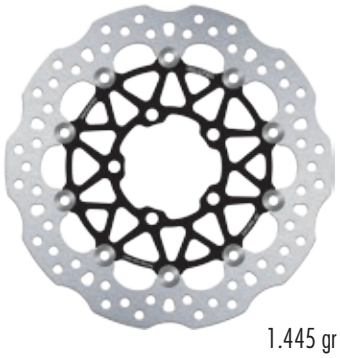

1.445 gr

GALFER DF 101 CW1

øext.	190 mm
øint.	70
	4,0

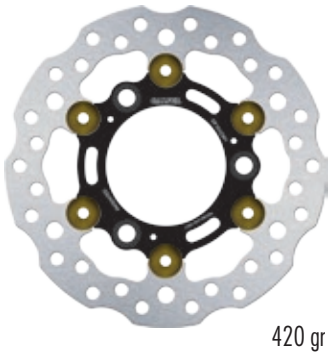

420 gr

GALFER DF 110 CW1

øext.	290 mm
øint.	60
	5,5
	12,5

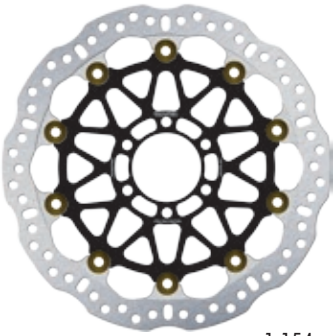

1.154 gr

GALFER DF 190 CW1

øext.	310 mm
øint.	80
	5,5
	0,0

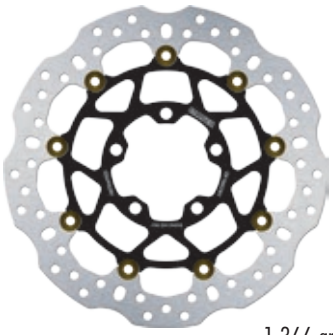

1.366 gr

GALFER DF 102 CW1

øext.	218 mm
øint.	60,1
	4,0
	6,0

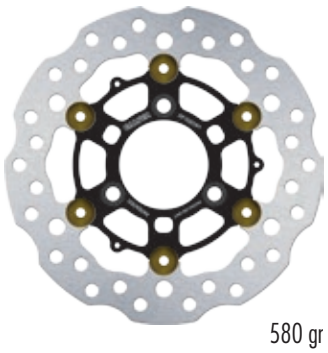

580 gr

GALFER DF 111 CW1

øext.	218 mm
øint.	69
	4,5
	10,25

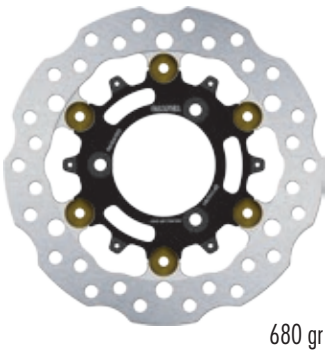

680 gr

GALFER DF 193 W

øext.	220 mm
øint.	100
	5,0

491 gr

GALFER DF 103 W1

øext.	187 mm
øint.	88
	3,5

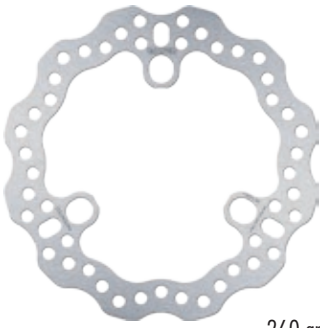

260 gr

GALFER DF 112 CW1

øext.	310 mm
øint.	69
	5,5
	17,0

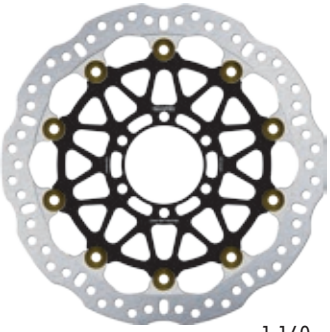

1.160 gr

GALFER DF 193 WA

øext.	220 mm
øint.	100
	5,0

495 gr

GALFER DF 194 CW2

øext.	330 mm
øint.	80
	5,8
	0,0

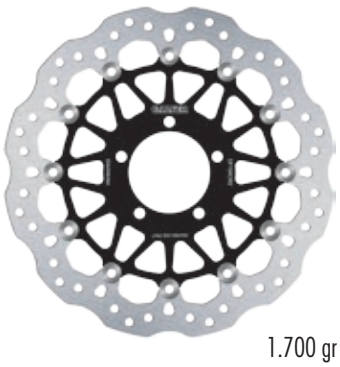

1.700 gr

GALFER DF 339 W

øext.	220 mm
øint.	89
	5,0

729 gr

GALFER DF 460 CW1

øext.	298 mm
øint.	132
	4,5
	0,0

1.030 gr

GALFER DF 205 CW1

øext.	290 mm
øint.	130
	4,5

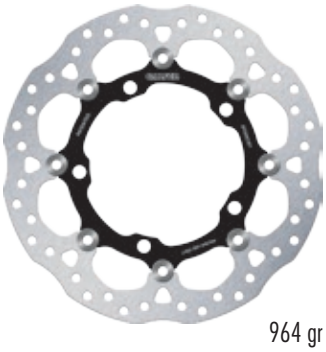

964 gr

GALFER DF 348 CW1

øext.	310 mm
øint.	100
	5,0
	0,0

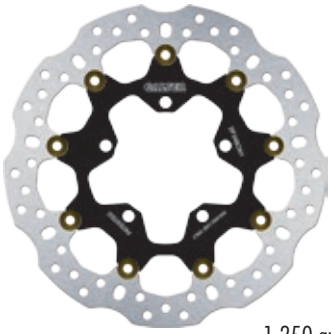

1.250 gr

GALFER DF 461 W

øext.	220 mm
øint.	105
	4,5

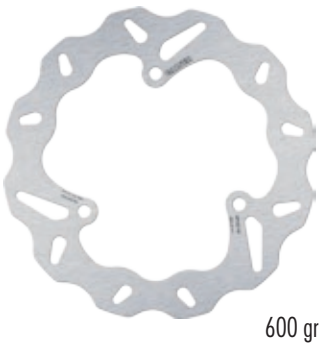

600 gr

GALFER DF 206 W

øext.	270 mm
øint.	110
	5,0

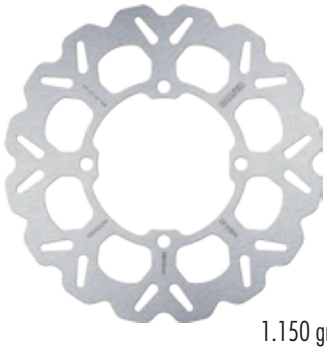

1.150 gr

GALFER DF 358 CW1

øext.	310 mm
øint.	102
	5,0
	0,0

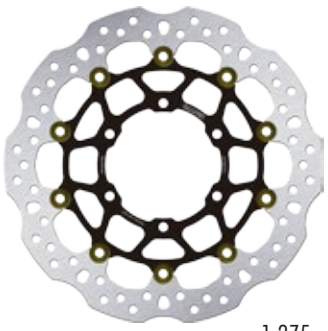

1.275 gr

GALFER DF 475 CW1

øext.	320 mm
øint.	132
	5,5
	0,0

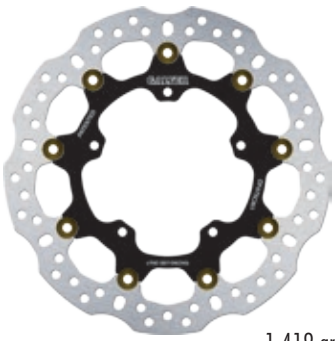

1.419 gr

GALFER DF 211 CW1

øext.	330 mm
øint.	70
	5,8
	12,4

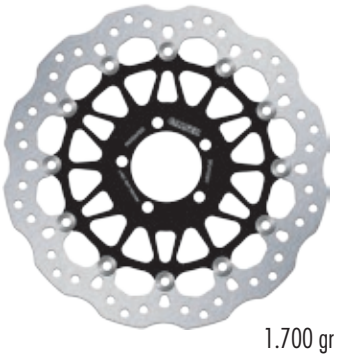

1.700 gr

GALFER DF 358 CW2

øext.	310 mm
øint.	102
	5,0
	0,0

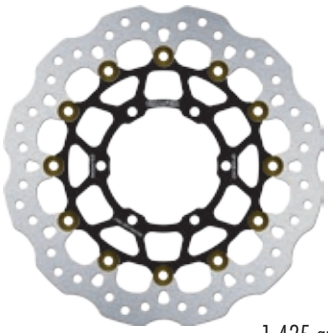

1.425 gr

GALFER DF 482 CW1

øext.	310 mm
øint.	132
	5,0
	0,0

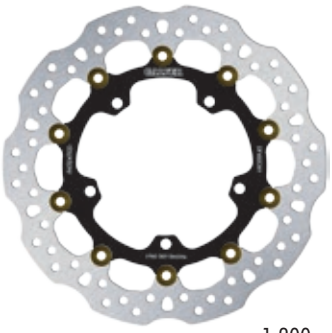

1.200 gr

GALFER DF 325 CW1

øext.	320 mm
øint.	102
	5,0
	0,0

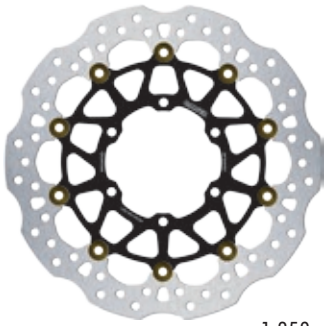

1.358 gr

GALFER DF 370 W

øext.	220 mm
øint.	110
	5,0

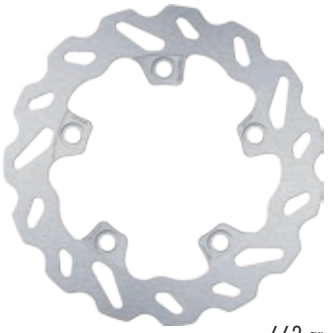

662 gr

GALFER DF 496 W

øext.	220 mm
øint.	105
	4,5

640 gr

GALFER DF 520 CW1-D

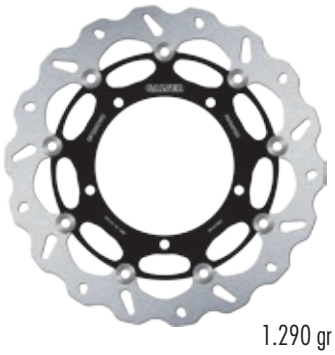

øext.	310 mm
øint.	132
	5,0
	0,0

1.290 gr

GALFER DF 800 CW

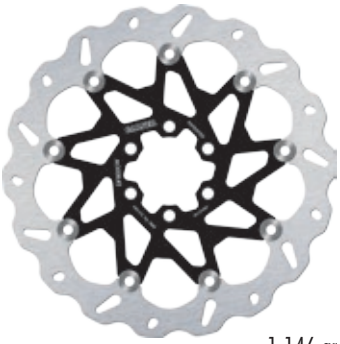

øext.	300 mm
øint.	60
	5,0

1.146 gr

GALFER DF 952 CW1

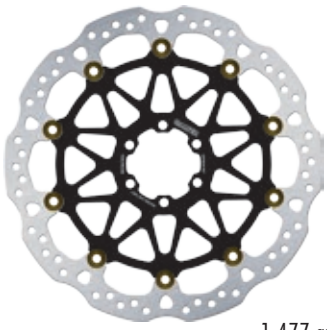

øext.	330 mm
øint.	64
	5,5

1.477 gr

GALFER DF 669 WA

OE

øext.	220 mm
øint.	102
	5,0

660 gr

GALFER DF 817 CW1

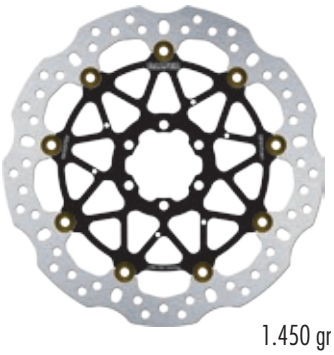

øext.	320 mm
øint.	64
	5,5

1.450 gr

GALFER DF 755 CW1

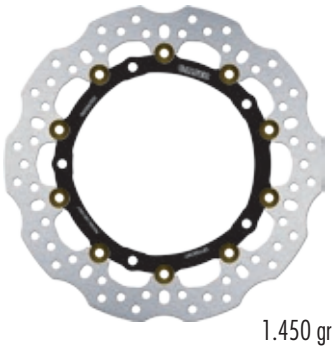

øext.	320 mm
øint.	179
	6,0

1.450 gr

GALFER DF 830 CW1

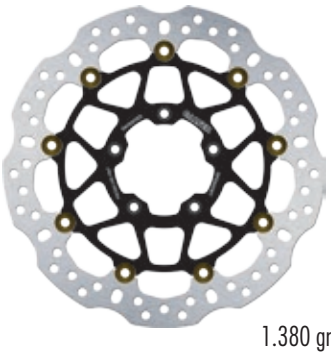

øext.	320 mm
øint.	80
	5,0

1.380 gr

GALFER DF 756 W

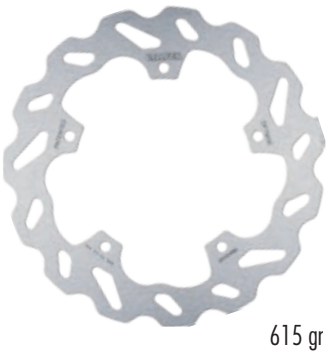

øext.	220 mm
øint.	120
	5,0

615 gr

GALFER DF 883 CW2

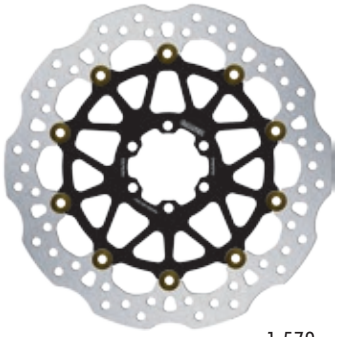

øext.	320 mm
øint.	64
	5,5
	10,25

1.579 gr

GALFER DF 790 W

øext.	230 mm
øint.	104
	4,0

567 gr

GALFER DF 906 CW1

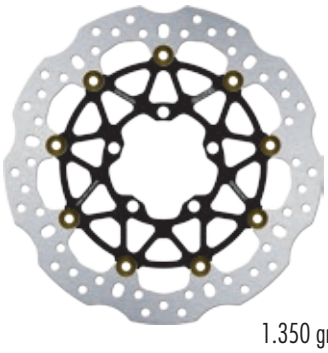

øext.	310 mm
øint.	83
	5,0

1.350 gr

NEW RACING DESIGN

GALFER Racing

Disc wave®

Approved by HRC

Used by Estrella Galicia, Gresini Racing & Leopard Racing

in MOTO GP (Moto3) 2017

the new CW1 brake discs

Ref. DF100CW1
ø 218 x 4,0 mm
HRC Moto3 Front

Ref. DF101CW1
ø 190 x 4,0 mm
HRC Moto3 Rear

GALFER Racing

NEW RACING DESIGN

Disc wave®

Used in WSBK

By GoEleven (Kawasaki), Evan Bros (Honda)

& Profile Racing (Triumph) in 2016 & 2017

the new Racing Disc Wave®

Ref. DF187CW2
ø 336 x 6,5 mm
Kawasaki ZX-10R Front

Ref. DF070CW1
ø 310 x 5,0 mm
HONDA CBR 600 RR Front

Ref. DF184CW2
ø 300 x 5,8 mm
Kawasaki ZX6R Front

Ref. DF906CW1
ø 310 x 5,0 mm
Triumph Daytona 675R Front

PICTURE	REF.	DESCRIPTION	NET PRICE
	1 TUBO	1 TUBE BRAIDED STEEL LINE 1 TUBO LATIGUILLOS METÁLICO	**34,60 €**
	3 VÍAS	3 LINES BRAIDED STEEL LINE ("T" CONNECTOR) 3 VÍAS LATIGUILLOS METÁLICO (CONECTOR "T")	**85,30 €**
	FK002D2QD	QUICK CONECT LINE (Assembly included) CONECTOR RAPIDO LATIGUILLO (Incluye el montaje)	**150 €**
	FK092D0915	TELEMETRY SENSOR ADAPTER ADAPTADOR SENSOR TELEMETRIA	**20 €**
	LF014R	RACING BRAKE FLUID 500ml LIQUIDO DE FRENOS RACING 500ml	**36 €**
	95998A01	BRAKE DISC CLEANER LIMPIADOR DE DISCOS DE FRENO	**5 €**

CATEGORY	BRAND & MODEL	YEAR MODEL	FRONT	REAR
			FK - BRAKE LINES	FK - BRAKE LINES
SSPP	YAMAHA R-6	05-	FK103C512	FK103C512
	HONDA CBR 600 RR	09-	FK103C588	FK103C588R
	KAWASAKI ZX6R	09-	FK103C584	FK103C719R
	SUZUKI GSXR 600R	11-	FK103C765	FK103C765R
SBK	KAWASAKI ZX10R	13-	FK103CE043	FK103CE043R
	HONDA CBR 1000 RR SP	08-	FK103C641	FK103C641R
	BMW S 1000 RR	09-	FK103CE009	FK103CE009R
	SUZUKI GSX R 1000	12-	FK103C773	FK103C700R
	YAMAHA YZF R-1 / R-1 M	15-	FK103CE056	FK103CE056R

Net prices without VAT valid only for competition sold in circuits | Precios netos sin IVA solo para competición de venta en circuitos. 04–04-2016