2010
2011

STEERING AND SUSPENSION PARTS

LENKUNGS UND AUFHANGUNGSTEILE

PIECES DE DIRECTION ET SUSPENSION

ROTULAS DE SUSPENSION Y DIRECCIÓN

PARTI SOSPENSIONE E STERZO

Oltre che sui cataloghi cartacei dei prodotti aftermarket di Ashika, è possibile trovare i prodotti Ashika anche in TecDoc, leader europeo nella produzione di catalogazione elettronica.

Ashika è "Fornitore di dati certificato" per TecDoc. Vale a dire che tutti i dati di Ashika presenti in TecDoc godono di ottima qualità, sono stati controllati e verificati da TecDoc, e supportati dagli specialisti di Ashika. I pezzi possono essere facilmente reperiti cliccando sul relativo veicolo e sul gruppo di prodotti. Quando vengono visualizzate le parti Ashika corrette, l'utente può visionare anche informazioni aggiuntive (ad es. dimensioni, caratteristiche o immagini).

Beside the paper catalogues of the Ashika Aftermarket products, Ashika products can also be found in TecDoc, European leader of electronic cataloguing.

Ashika is a "certified Data Supplier" to TecDoc. This means that all Ashika data in TecDoc is of the highest quality, controlled and checked by TecDoc, and maintenained by Japanparts' own specialists. Parts can easily be found just by clicking on the proper vehicle and product-group. When the correct Ashika part(s) is/are displayed, also additional information can be viewed (i.e. dimensions, remarks or pictures).

	The position of the steering parts is given in the traffic direction	Die Position der Teile ist angegeben in der Fahrrichtung	La position des pièces est indiquée dans le sens de la circulation
-> CHASxxx	Up to Chassis nr. xx	bis Fahrgestell Nr. xxx	Jusqu'au n° de Chassis xxx
adjusting bolt	adjustment bolt	Zentrierbolzen	boulon regable
Ashika code	Ashika code	Ashika Nummer	Ashika code
axial joint	axial joint	Axialgelenk	biellete de direction
ball joint	ball joint	Führungsgelenk	rotule de suspension
bolt	bolt	Bolzen	boulon
center	center	Mitte	milieu
centre rod	centre rod	Lenkstange	barre d'accouplement
CHASxxx ->	From Chassis nr. xx	ab Fahrgestell Nr. xxx	Apartir du n°de Chassis xxx
complete set	complete set	komplett Ausrüstung	necessaire complet
connecting piece	connecting piece	Stück	pièce de connection
Description	Description of the piece	Artikelbezeichnung	Description de la pièce
drag end	drag end	Lenkstange	Levier de Commande
exc.	Except	außer	Excepté
eye bolt	eye bolt	Hebelauge	boulon à oeil
gear box mounting	Gear box mounting	Getriebelager	Support boîte à vitesse
idler arm	idler arm	Lenkzwischenhebel	palier de direction
inner	Inner	Inner	Intérieur
king pin set	king pin set	Achsbolzensatz	jeu d'axes de fusée
left	Left	Links	à gauche
LHD/RHD	Left/Right hand drive	Links-/rechtslenkung	Conduite à gauche/à droite
link rod	Link rod	Lenkstange	barre d'accouplement
link rod stearing box	Link rod stearing box	Lenkstange lenkgetriebe	barre d'accouplement boîte de direction
lower	Lower	Unten	Inférieur
mounting	Mounting	Lagerung	Coussinet
mounting tool	Mounting tool	Montagegerät	Outil de montage
MS	Manual steering	Manuelle Lenkung	Direction non assistée
OE nr.	Original equiment number	Original Nummer	Référence d'origine
only for	Only for	nur für	Seulement pour
outer	Outer	Äußer	Extérieur
part of	Part of OE nr.	Teil von Original Nummer	Partie d'une OE nr.
pitman arm	Pitman arm	Zwischenradarm	Bras de renvoi
PS	Power steering	Servo Lenkung	Direction assistée
rear	Rear	Hinten	Arrière
repair kit	repair set	Rep. Satz	nécessaire de réparation
RHT/LHT	Right/Left Hand Thread	Rechts-/Linksgewinde	Filetage à gauche/à droite
right	Right	Rechts	à droite
rubber mounting rear axle	Rubber Mounting rear axle	Achslager	Support
silentblock	Silentblock	Silentblock	Silentbloc
sleeve	Bush	Buchse	Bague
stabiliser	stabilizer	pendelstütze	appui pendulaire
stabiliser bar	stabilizer	pendelstütze	appui pendulaire
stabiliser link	stabilizer	pendelstütze	appui pendulaire
stabiliser mounting	stabilizer mounting	Lagerbusche	coussinet de pallier
steering rack gaiter	steering rod gaiter	Lenkungsmanschette	gaine crémaillère
thrust rod	thrust rod	Druckstrebe	tirant
tie rod	tie rod	Spurstange	barre de direction
tie rod end	tie rod end	Kugelgelenk/Spurstangenkopf	rotule de direction
track control arm	track control arm	Querlenker	bras de suspension
track rod	track rod	Lenkstange	rotule de suspension
upper	Upper	Oben	Supérieur
without	Without	Ohne	Sans

PRODUCTS RANGE
PRODUKTE IM SORTIMENT
GAMME DE PRODUIT
GAMA DE PRODUCTOS
PRODOTTI IN GAMMA..... PAG. 3

MEASURES
MASSNAHMEN
MESURES
MEDIDAS
MISURE..... PAG. 6

CHEVROLET ..... PAG. 8

CHRYSLER..... PAG. 14

DAEWOO-CHEVROLET ..... PAG. 18

DAIHATSU..... PAG. 27

HONDA..... PAG. 41

HYUNDAI ..... PAG. 72

ISUZU ..... PAG. 99

JEEP..... PAG. 105

KIA ..... PAG. 109

LAND ROVER..... PAG. 130

MAHINDRA..... PAG. 140

MAZDA ..... PAG. 141

MITSUBISHI ..... PAG. 169

NISSAN ..... PAG. 210

SMART ..... PAG. 253

SSANGYONG ..... PAG. 255

SUBARU ..... PAG. 258

SUZUKI..... PAG. 269

TATA..... PAG. 289

TOYOTA..... PAG. 293

CROSS REFERENCE LIST
VERGLEICHSLISTE
LISTA DE REFERENCIAS CRUZADES
LISTE DE COMPARAISON
LISTA DI COMPARAZIONE..... PAG. 349

BUMP RUBBER KIT UNIVERSAL TYPE
UNIVERSALE DÄMPFERKAPPEN
SOUFFLET DE CARDAN
FUELLES AMTORIGUADORES UNIVERSALES
CUFFIE AMMORTIZZATORI UNIVERSALI..... PAG. 379

RUBBER PARTS LIST
MOTORAUFHÄNGUNG LISTE
LISTE SILENT BLOCS
LISTA TAPONES DE GOMA
LISTA PARTI IN GOMMA ..... PAG. 390

SOSPENSIONI / SUSPENSIONS LENKUNGS UND-AUFHÄNGUNGSTEILE SUSPENSION / SUSPENSIÓN		
	MA	AMMORTIZZATORI
		SHOCK ABSORBERS
		AMORTISSEURS
		STOSSDÄMPFER
		AMORTIZADORES
		AMORTIZADORES
	44	KIT CUSCINETTI RUOTA
		WHEELBEARING KITS
		KIT DE ROULEMENTS DE ROUES
		RADLAGERSÄTZE
		KIT PROTECTORES ROTA
		KIT COJINETES DE RUEDA
	GOM	GOMMINI
		RUBBERS
		SILENT BLOCS
		MOTORAUFHÄNGUNG
		BORRACHAS
		TAPONES DE GOMA
	72	TRAPEZIO
		SUSPENSION TRIANGLE
		TRIANGLE DE SUSPENSION
		TRAPEZ
		TRAPÉZIO
		TRAPECIO
	71 102	BRACCIO OSCILLANTE
		SUSPENSION ARMS
		BRAS OSCILLANTS
		SCHWENKARME
		BRAÇO OSCILADOR
		BRAZO OSCILANTE
	59	LEVE RINVIO STERZO
		STEERING RELAY
		LEVIERS DE RENVOI DE LA DIRECTION
		LENKRADHEBEL
		MANOBRA LIGEIRA DE REGRESSO DO VOLANTE
		LEVAS DE REENVÍO DE LA DIRECCIÓN
	53	TESTINE SOSPENSIONE
		BALL JOINT
		ROTULE (POUR SUSPENSION ET DIRECTION)
		AUFHÄNGEKÖPFE
		CABEÇAS DE SUSPENSÃO
		CABEZALES DE SUSPENSIÓN
	105	BARRE ACCOPPIAMENTO
		COUPLING BARS
		BARRES D'ACCOUPLEMENT
		PLEUELSTANGEN
		BARRAS DE JUNÇÃO
		BARRAS DE ACOPLAMIENTO

SOSPENSIONI / SUSPENSIONS LENKUNGS UND-AUFHÄNGUNGSTEILE SUSPENSION / SUSPENSIÓN		
	111	TESTA BARRA D'ACCOPPIAMENTO
		TIE-ROD END
		ROTULE DE BARRE DE CONNEXION
		SPURSTANGENKOPF
		CABEÇA BARRA DE JUNÇÃO
		CABEZA DE BARRA DE ACOPLAMIENTO
	26	BRACCIO OSCILLANTE, SOSPENSIONE RUOTA
		TRACK CONTROL ARM
		BRAS DE LIAISON, SUSPENSION DE ROUE
		LENKER, RADAUFHÄNGUNG
		BRAÇO OSCILADOR, SUSPENSÃO RODA
		BRAZO OSCILANTE, SUSPENSIÓN DE RUEDA
	52	LEVE RINVIO STERZO
		STEERING RELAY
		LEVIERS DE RENVOI DE LA DIRECTION
		LENKRADHEBEL
		MANOBRA LIGEIRA DE REGRESSO DO VOLANTE
		LEVAS DE REENVÍO DE LA DIRECCIÓN
	103	GIUNTO ASSIALE, ASTA TRASVERSALE
		AXIAL ROD, TIE ROD
		ROTULE DE DIRECTION INTÉRIEURE, BARRE DE CONNEXION
		AXIALGELENK, SPURSTANGE
		JUNTA AXIAL, FERRO TRANSVERSAL
		JUNTA AXIAL, ASTA TRANSVERSAL
	106	STABILIZZATORE, CHASSIS
		STABILISER, CHASSIS
		STABILISATEUR, CHASSIS
		STABILISATOR, FAHRWERK
		ESTABILIZADOR, CHASSI
		ESTABILIZADOR, CHASIS
	27	BARRA D'ACCOPPIAMENTO
		TIE ROD, STEERING
		BARRE DE CONNEXION SPURSTANGE
		BARRA DE JUNÇÃO
		BARRA DE ACOPLAMIENTO
	76	GIUNTO ASSIALE, ASTA TRASVERSALE
		AXIAL ROD, TIE ROD
		ROTULE DE DIRECTION INTÉRIEURE, BARRE DE CONNEXION
		AXIALGELENK, SPURSTANGE
		JUNTA AXIAL, FERRO TRANSVERSAL
		JUNTA AXIAL, ASTA TRANSVERSAL
	73	GIUNTO DI SUPPORTO/GUIDA
		SUPPORT/TEERING LINK
		ROTULE DE SUSPENSION
		TRAG/FÜHRUNGSGELENK
		JUNTA DE SUPORTE /GUIA
		JUNTA DE SOPORTE /GUÍA

The pictures as shown in the catalogue are not a reproduction of original drawings and are only mean for visual and identifying purposes and cannot be objected witch the original parts at all, Ashika declines any responsibility following improper uses of these pictures and possible mistakes.

I disegni riportati nel catalogo non sono riproduzioni di disegni originali e sono a solo uso visivo ed identificativo e non potranno costituire oggetto di contestazione con i pezzi originali, in ogni caso Ashika declina ogni responsabilità sull'uso improprio degli stessi e non risponderà di eventuali errori e/o omissioni.

Copyright by Ashika - Verona

All rights of reproduction are reserved for Ashika
Les droits de reproduction sont réservés à Ashika
Todos los derechos de la reproducción son reservados para Ashika
I diritti di riproduzione sono riservati ad Ashika

LETTURA DEL CODICE ASHIKA - THE KEY TO THE ASHIKA' CODE

ESEMPIO / EXAMPLE

GOM- 9 10

- 10 — PARTE NUMERICA / COUNTING POSITION
- 9 — COSTRUTTORE DEL VEICOLO / CAR MANUFACTURER
  - 0 = TATA - LADA - HUMMER
  - 1 = NISSAN
  - 2 = TOYOTA
  - 3 = MAZDA
  - 4 = HONDA
  - 5 = MITSUBISHI
  - 6 = DAIHATSU - PIAGGIO
  - 7 = SUBARU
  - 8 = SUZUKI - MARUTI
  - 9 = ISUZU - JEEP - OPEL - CHRYSLER
  - H = HYUNDAI
  - K = KIA
  - L = LAND ROVER
  - M = SMART
  - S = SSANGYONG
  - W = DAEWOO-CHEVROLET
- GOM — IDENTIFICA IL PRODOTTO / MAIN PRODUCT GROUP

FILTRI/FILTERS/FILTRES/FILTER/FILTROS/FILTROS		
	10	FILTRI OLIO
		OIL FILTERS
	20	FILTRI ARIA
		AIR FILTERS
	21	FILTRI ABITACOLO
		CABIN FILTERS
	30	FILTRI CARBURANTE
		FUEL FILTERS
	10-ECO	FILTRI OLIO ECO
		ECO OIL FILTERS
	30-ECO	FILTRI CARBURANTE ECO
		ECO FUEL FILTERS
	74	KIT FILTRI PER TAGLIANDO
		SERVICE FILTER KIT
	NEW 10-GAS	FILTRO DEPURAZIONE GPL
		GPL PURIFICATION FILTER
	NEW 99	SUPPORTO FILTRO
		FILTER SUPPORT

FRENANTE/BRAKES/BREMS/FREINAGE/FREIOS		
	50	PASTIGLIE FRENO ANT.
		BRAKE PADS FRONT
	51	PASTIGLIE FRENO POST.
		BRAKE PADS REAR
	60	DISCHI FRENO ANT.
		BRAKE DISCS FRONT
	61	DISCHI FRENO POST.
		BRAKE DISCS REAR
	55	GANASCE FRENO
		BRAKE SHOES
	56	TAMBURI FRENO
		BRAKE DRUMS
	65	CILINDRETTI FRENO DX
		REAR WHEEL CYLINDER RIGHT
	67	CILINDRETTI FRENO SX
		REAR WHEEL CYLINDER LEFT
	68	POMPE FRENO
		BRAKE MASTER CYLINDERS
	69	TUBI FRENO
		BRAKE HOSES
	KFR	KIT FRENO (2 dischi+1 past. ant.)
		BRAKE KIT (2 discs+1 pads front)
	KRR	KIT FRENO (2 dischi+1 past. post.)
		BRAKE KIT (2 discs+1 pads rear)
	114	KIT RIPARAZIONE POMPA FRENO
		REPAIR KIT, BRAKE MASTER CYLINDER
	120	KIT RIPARAZIONE PINZA FRENO
		BRAKE CALIPERS REPAIR KIT

FRIZIONI/CLUTCH/KUPPLUNG EMBRAYAGE/EMBRAGUE		
	80	DISCHI FRIZIONE
		CLUTCH DISC
	70	SPINGIDISCO FRIZIONE
		CLUTCH COVER
	90	CUSCINETTI FRIZIONE
		CLUTCH BEARING
	92	KIT FRIZIONE
		CLUTCH KITS
	91	VOLANI
		FLYWHEELS
	98	KIT FRIZIONE COMPLETO DI VOLANO
		CLUTCH KIT WITH FLYWHEEL
	54	BULLONE, PORTA CORONA DENTATA VOLANO
		BOLT, FLYWHEEL RING GEAR CARRIER VIS
	95	POMPE FRIZIONE
		CLUTCH MASTER CYLINDERS
	85	CILINDRETTI FRIZIONE
		CLUTCH SLAVE CYLINDERS
	123	KIT RIPARAZIONE POMPA FRIZIONE
		REPAIR KIT, CLUTCH MASTER CYLINDER
	124	KIT RIPARAZIONE CILINDRETTO FRIZIONE
		REPAIR KIT, CLUTCH SLAVE CYLINDER

DISTRIBUZIONE / DISTRIBUTION / VERTEILUNG DISTRIBUTION / DISTRIBUCIÓN		
	45	CUSCINETTI TENDICINGHIA
		TIMING BELT TENSIONERS
	40	CINGHIE DISTRIBUZIONE
		TIMING BELTS
	41	CATENE DISTRIBUZIONE
		TIMING CHAINS
	KCK	KIT DISTRIBUZIONE CATENA
		KIT TIMING CHAINS
	94	CINGHIA SERVIZI
		AUTOMOTIVE BELT
	109	CINGHIA SERVIZI MITSUBOSHI
		AUTOMOTIVE BELT MITSUBOSHI
	96	CINGHIE SERVIZI SCANALATE
		AUTOMOTIVE BELTS
	112	CINGHIA SERVIZI SCANALATA MITSUBOSHI
		AUTOMOTIVE BELT MITSUBOSHI
	KCT	KIT CINGHIA E TENDICINGHIA
		TIMING BELT KIT

RAFFREDDAMENTO / COOLING / ABKÜHLUNG REFROIDISSEMENT / ENFRIAMIENTO		
	35	POMPE ACQUA
		WATER PUMPS
	36	GIUNTI VISCOSI
		VISCOUS COUPLINGS
	38	VALVOLE TERMOSTATICHE
		THERMOSTATES
	22	VALVOLA TERMOSTATICA TAMA
		THERMOSTATE TAMA (made in japan)
	33	TAPPI RADIATORE
		RADIATOR CAPS

GIUNTI E CUFFIE / JOINTS AND BOOTS KUPPLUNGEN UND ACHSMANSCHETTEN COUPLEUR, SOUFFLET DE CARDAN / JUNTAS Y FUELLES		
	62	GIUNTI OMOCINETICI LATO RUOTA
		COSTANT VELOCITY JOINTS
	63	KIT CUFFIA
		BOOT KITS
	66	CROCIERE
		UNIVERSAL JOINTS
	63-0A	CUFFIE AMMORTIZZATORI UNIVERSALI PARAPOLVERE
		UNIVERSAL BUMP RUBBER KIT

IMPIANTO ELETTRICO / ELECTRICAL PARTS ELEKTRISCHE TEILE / ÉLECTRIQUE PARTS PARTES ELECTRICAS		
	002	ALTERNATORI
		ALTERNATORS
	003	MOTORINI AVVIAMENTO
		STARTERS
	64	BULBI ELETTROVENTOLA
		TEMP. SENSORS
	121	CALOTTE SPINTEROGENO
		DISTRIBUTOR CAPS
	01	CANDELETTE
		GLOW PLUGS
	DENSO	CANDELE
		SPARK PLUGS
	HKT	CANDELETTE HKT
		HKT GLOW PLUGS
	DENSO	CANDELETTE DENSO
		DENSO GLOW PLUGS
	43	SONDE LAMBDA UNIVERSALI
		UNIVERSAL OXIGEN SENSORS
	DENSO	SONDE LAMBDA DENSO
		OXIGEN SENSORS DENSO
	05	POMPE BENZINA
		FUEL PUMP

IMPIANTO ELETTRICO / ELECTRICAL PARTS ELEKTRISCHE TEILE / ÉLECTRIQUE PARTS PARTES ELECTRICAS		
	77	REGOLATORI
		REGULATORS
	97	SPAZZOLE ACCENSIONE
		ROTOR ARMS
	SA-X	SPAZZOLE TERGICRISTALLO
		WIPER BLADES
	SA-F	SPAZZOLE TERGICRISTALLO UNIVERSALI FLAT
		UNIVERSAL FLAT WIPER BLADES
	SA-RE	REFILL UNIVERSALI PER SPAZZOLE NORMALI
		UNIVERSAL REFILL FOR NORMAL WIPER BLADES/WIPER BLADES
	SA-RE70VL SA-RE75BH	REFILL UNIVERSALI PER SPAZZOLE/FLAT VALEO (70CM)/BOSCH (75CM)
		UNIVERSAL REFILL FOR WIPER BLADES AND FOR BOSCH AND VALEO FLAT WIPER BLADES
		KIT CAVI ACCENSIONE
		ELECTRIC-CABLE IGNITION KIT
	78	BOBINA DI ACCENSIONE
		COIL, IGNITION
	13	CONDENSATORE
		CONDENSER, IGNITION
	06	KIT CONTATTI ACCENSIONE
		CONTACT BREAKER
	08 09 07	GRUPPO UNIVERSALE KOITO
		INSERT, HEADLIGHT KOITO
	00	INTERRUTTORE STOP
		INTERRUPTEUR DES FEUX DE FREINS
	12	INTERRUTTORE TEMPERATURA, VENTOLA RADIATORE
		TEMPERATURE SWITCH, RADIATOR FAN
	11	PRESSOSTATO OLIO
		OIL PRESSURE SWITCH
	06	SPINTEROGENO
		DISTRIBUTOR
	02	SENSORE MASSA ARIA
		MASS SENSOR
	75	CORPO FARFALLATO ELETTRICO
		THROTTLE HOUSING
		SENSORE TEMPERATURA ARIA ASPIRATA
		SENDER UNIT, INTAKE AIR TEMPERATURE

MOTORE / ENGINE / MOTOR / MOTEUR / MOTOR		
	16	ALBERI A CAMME
		CAMSHAFTS
	18	ALBERI MOTORE
		CRANKSHAFTS

MOTORE / ENGINE / MOTOR / MOTEUR / MOTOR		
	NEW 122	PULEGGIA ALBERO MOTORE CRANK SHAFT PULLEYS
	47	GUARNIZIONI COPERCHIO VALVOLE VALVES COVER GASKETS
	46	GUARNIZIONI TESTATA HEAD GASKETS
	48	KIT GUARNIZIONI TESTATA HEAD GASKETS SET
	39	KIT PISTONI PISTONS KIT
	49	KIT GUARNIZIONI MOTORE FULL SET GASKET
	15	VALVOLE ENGINE VALVES
		TESTATE CYLINDER HEADS
		COLLETTORE DI ASPIRAZIONE INDUCTION MANIFOLD
	23	BIELLE CONNECTING ROADS
	05	BOCCOLA BIELLA PISTON PIN BUSHINGS
	34	FASCIA ELASTICA PISTON RING
	86	BRONZINA BANCO MAIN BEARINGS

MOTORE / ENGINE / MOTOR / MOTEUR / MOTOR		
	82	BRONZINA DI BIELLA BIG END BEARINGS
	19	KIT CANNE CILINDRO MOTORE CYLINDER LINER KITS
	17	BILANCIERI VALVOLE BALANCES VALVES
	89 83	BRONZINA ALBERO A CAMME CAMSHAFT BEARINGS
	79	RASAMENTI THRUST WASHERS
	115	BULLONI TESTATA CYLINDER HEAD BOLT
		VALVOLA RICIRCOLO GAS DI SCARICO EXHAUST GAS RECIRCULATION VALVE VANNE EGR
		POMPA OLIO OIL PUMP
		INIETTORE INJECTOR
		MOTORE COMPLETO COMPLETE ENGINE
		TURBINA TURBOCHARGER

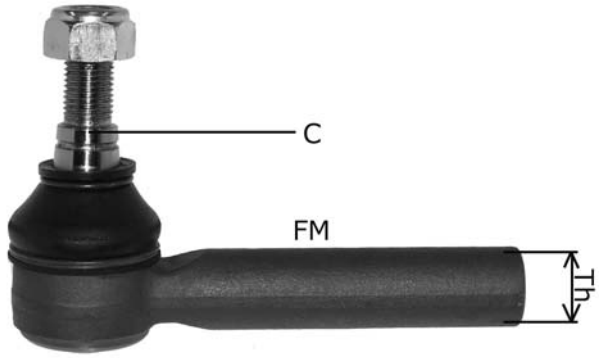

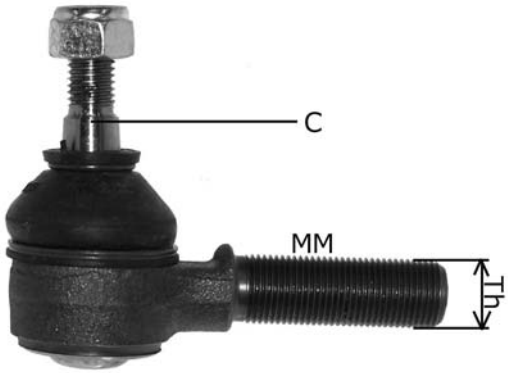

IT	GB	D	F	ESP
L Lunghezza	L Length	L Länge	L Longueur	L Longitud
D Diametro	D Diameter	D Durchmesser	D Diamètre	D Diámetro
C Diametro cono piccolo	C Smallest cone diameter	C Kleinster Konusdurchmesser	C Diamètre mineur du cone	C Diámetro más pequeño cono
Th Caratteristiche filettatura	Th Thread features	Th Gewindeabmessung	Th Caractéristiques du filet	Th Características rosca
FM Filettatura interna	FM Internal thread	FM Innengewinde	FM Filetage intérieur	FM Rosca interior
MM Filettatura esterna	MM External thread	MM Aussengewinde	MM Filetage extérieur	MM Rosca externa

O.E.M. names and numbers are used for reference purposes only Ashika assumes no responsibility for possible errors

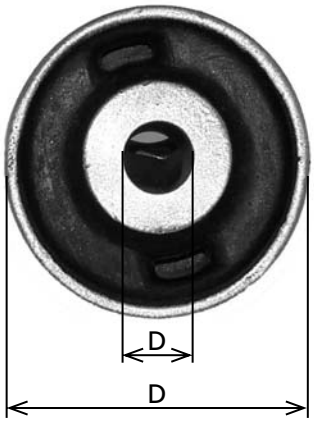

IT	GB	D	F	ESP
L Lunghezza	L Length	L Länge	L Longueur	L Longitud
D Diametro	D Diameter	D Durchmesser	D Diamètre	D Diámetro
C Diametro cono piccolo	C Smallest cone diameter	C Kleinster Konusdurchmesser	C Diamètre mineur du cone	C Diámetro más pequeño cono
Th Caratteristiche filettatura	Th Thread features	Th Gewindeabmessung	Th Caractéristiques du filet	Th Características rosca
FM Filettatura interna	FM Internal thread	FM Innengewinde	FM Filetage intérieur	FM Rosca interior
MM Filettatura esterna	MM External thread	MM Aussengewinde	MM Filetage extérieur	MM Rosca externa

CHEVROLET CAPTIVA

CAPTIVA 06/2006 ->

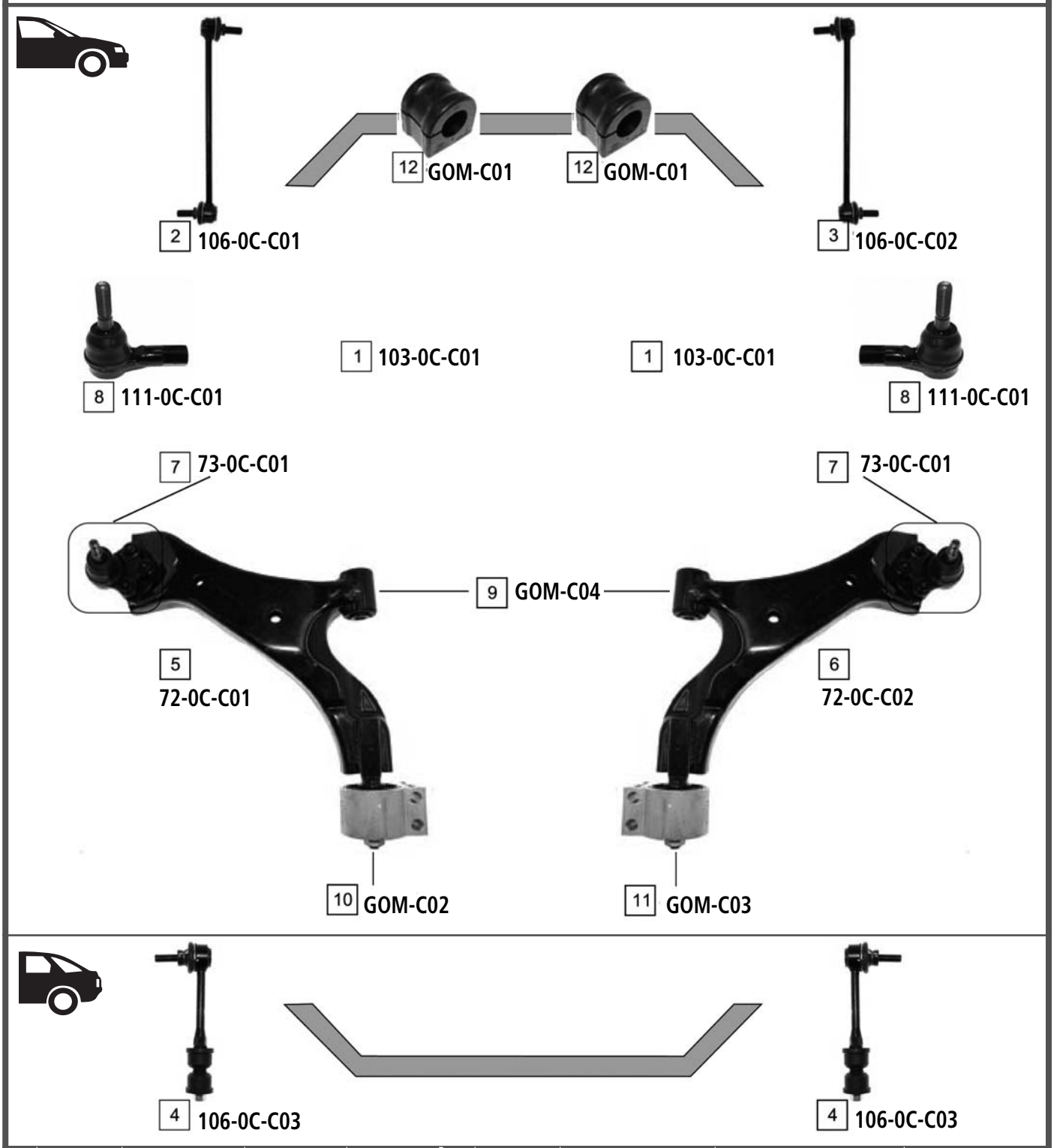

Ref.	ASHIKA CODE	Description	OEM	Measures	Ref.	ASHIKA CODE	Description	OEM	Measures
1	103-0C-C01	Axial Joint	Part of	-	7	73-0C-C01	Ball Joint	Part of 72-0C-C01 / 72-0C-C02	c: 15,2
2	106-0C-C01	Stabiliser Link Left	48 06 304	L: 286	8	111-0C-C01	Tie Rod End	96626667	c: 12,5 th: FM14X1.5 R
3	106-0C-C02	Stabiliser Link Right	48 06 305	L: 286	9	GOM-C04	Silentblock For Susp.Arm	Part of 72-0C-C01 / 72-0C-C02	d: 14,2
4	106-0C-C03	Stabiliser Link	96626150	L: 165	10	GOM-C02	Silentblock For Susp.Arm	Part of 72-0C-C01	d: 14,2
5	72-0C-C01	Tca Left Wbj	96819161	c: 15,2	11	GOM-C03	Silentblock For Susp.Arm	Part of 72-0C-C02	d: 14,2
6	72-0C-C02	Tca Right Wbj	48 06 301	c: 15,2	12	GOM-C01	Stabiliser Mounting	96810751	d: 26

O.E.M. names and numbers are used for reference purposes only Ashika assumes no responsibility for possible errors

EVANDA / EPICA **03/2005 ->**

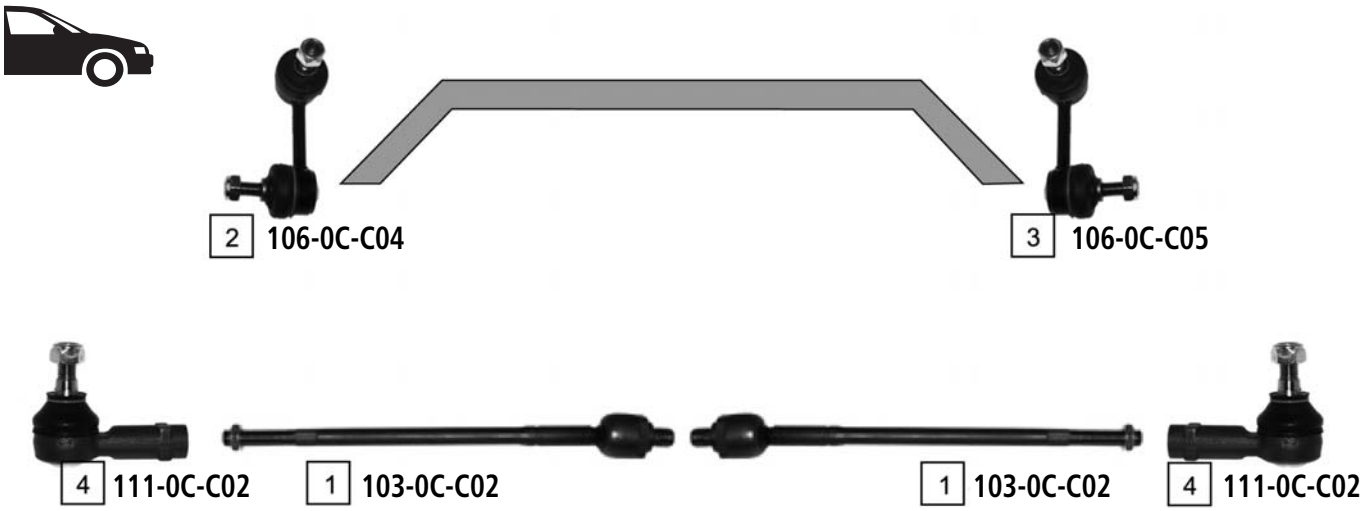

Ref.	ASHIKA CODE	Description	OEM	Measures	Ref.	ASHIKA CODE	Description	OEM	Measures
1	**103-0C-C02**	Axial Joint	93740701	th:MM16X1.5R L:358	3	**106-0C-C05**	Stabiliser Link Right	96225858	L:79
2	**106-0C-C04**	Stabiliser Link Left	96225859	L:79	4	**111-0C-C02**	Tie Rod End	93740710	c: 13.2 th:FM14X1.5R

KALOS **03/2005 ->**

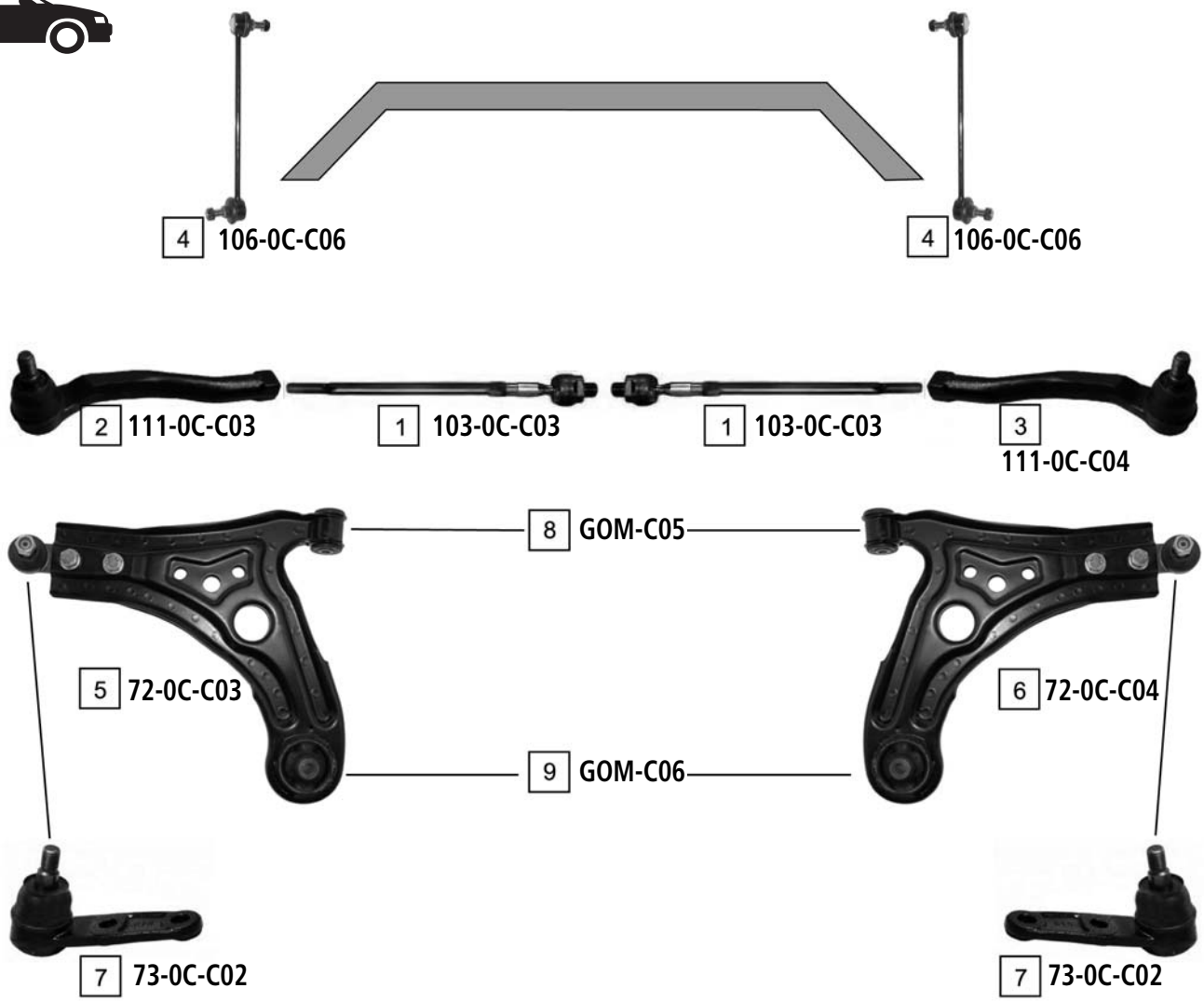

Ref.	ASHIKA CODE	Description	OEM	Measures	Ref.	ASHIKA CODE	Description	OEM	Measures
1	**103-0C-C03**	Axial Joint	No OE Ref	th: MM16X1.5R L:200	6	**72-0C-C04**	TCA Right	96535082	c: 14.8
2	**111-0C-C03**	Tie Rod End Left	9374-0722	c:13.2 th:FM12X1.5R	7	**73-0C-C02**	Ball Joint	96535089	c: 14.8
3	**111-0C-C04**	Tie Rod End Right	9374-0723	c:13.2 th:FM12X1.5R	8	**GOM-C05**	Silentblock For Susp.Arm	Part of 72-0C-C03 / 72-0C-C04	d: 28
4	**106-0C-C06**	Stabiliser Link	96391875	L: 260	9	**GOM-C06**	Silentblock For Susp.Arm	Part of 72-0C-C03 / 72-0C-C04	d: 60
5	**72-0C-C03**	TCA Left	96535081	c: 14.8					

O.E.M. names and numbers are used for reference purposes only Ashika assumes no responsibility for possible errors

LACETTI - NUBIRA 03/2005 ->

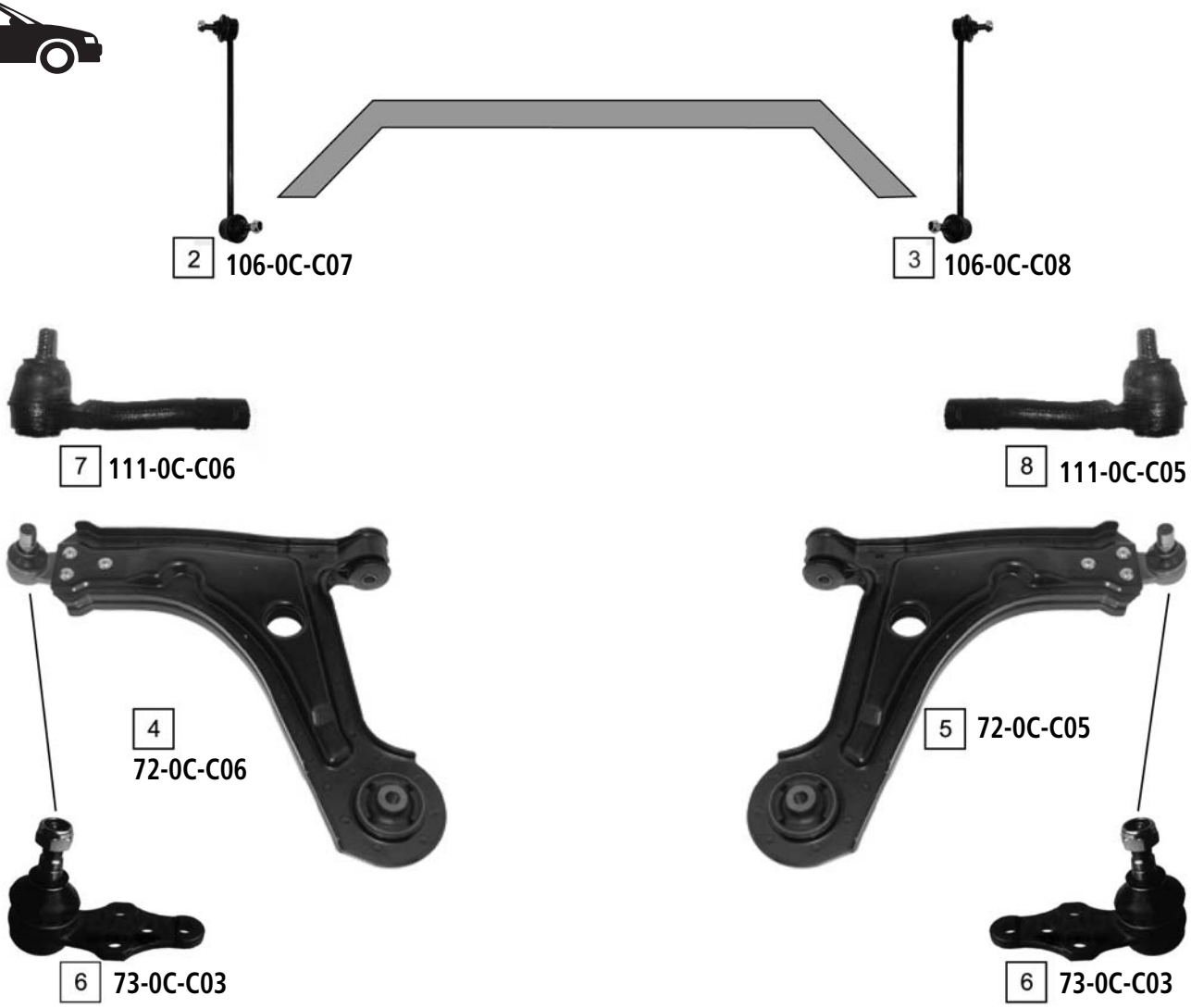

Ref.	ASHIKA CODE	Description	OEM	Measures	Ref.	ASHIKA CODE	Description	OEM	Measures
1	106-0C-C09	Stabiliser Link	96391876	L: 246	5	72-0C-C05	TCA Right	9639 1851	c: 18.2
2	106-0C-C07	Stabiliser Link	96403099	L: 271	6	73-0C-C03	Ball Joint	9649 0218	c: 18
3	106-0C-C08	Stabiliser Link	96403100	L: 271	7	111-0C-C06	Tie Rod End Left	96407485	c:13.3 th:FM14X1.5R
4	72-0C-C06	TCA Left	9639 1850	c: 18.2	8	111-0C-C05	Tie Rod End Right	96407486	c:13.3 th:FM14X1.5R

MATIZ **03/2005 ->**

MS

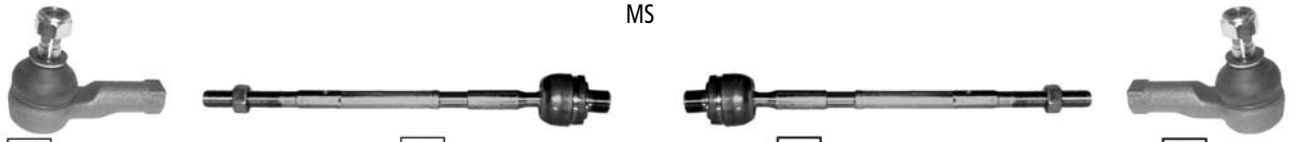

3 111-0W-D55 | 1 103-0W-D54 | 1 103-0W-D54 | 3 111-0W-D55

PS

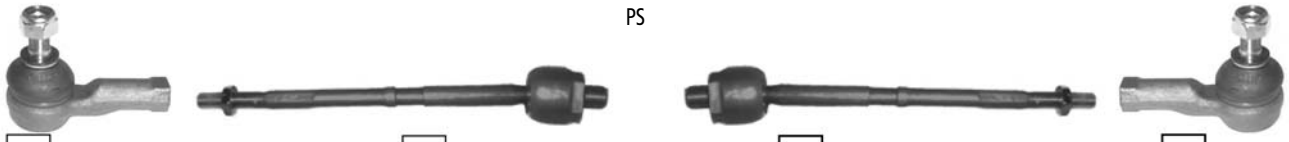

4 111-0D-D56 | 2 111-0W-D99 | 2 111-0W-D99 | 4 111-0D-D56

5 71-08-803 | 6 GOM-C07 | 5 71-08-803

Ref.	ASHIKA CODE	Description	OEM	Measures	Ref.	ASHIKA CODE	Description	OEM	Measures
1	**103-0W-D54**	Axial Joint	9374 1074	th: MM16X1.5R L:250	4	**111-0D-D56**	Tie Rod End	KBJ 029	c: 12.5 th: FM12X1.5R
2	**111-0W-D99**	Axial Joint	9374 1092	th: MM16X1.5R L:251	5	**71-08-803**	TCA	9631-6765	c:15
3	**111-0W-D55**	Tie Rod End	48810-A78B00	c:12.5 th:FM12X1.5R	6	**GOM-C07**	Silentblock For Susp.Arm	9638 0613	d: 27.5

O.E.M. names and numbers are used for reference purposes only Ashika assumes no responsibility for possible errors

TACUMA - REZZO 03/2005 ->

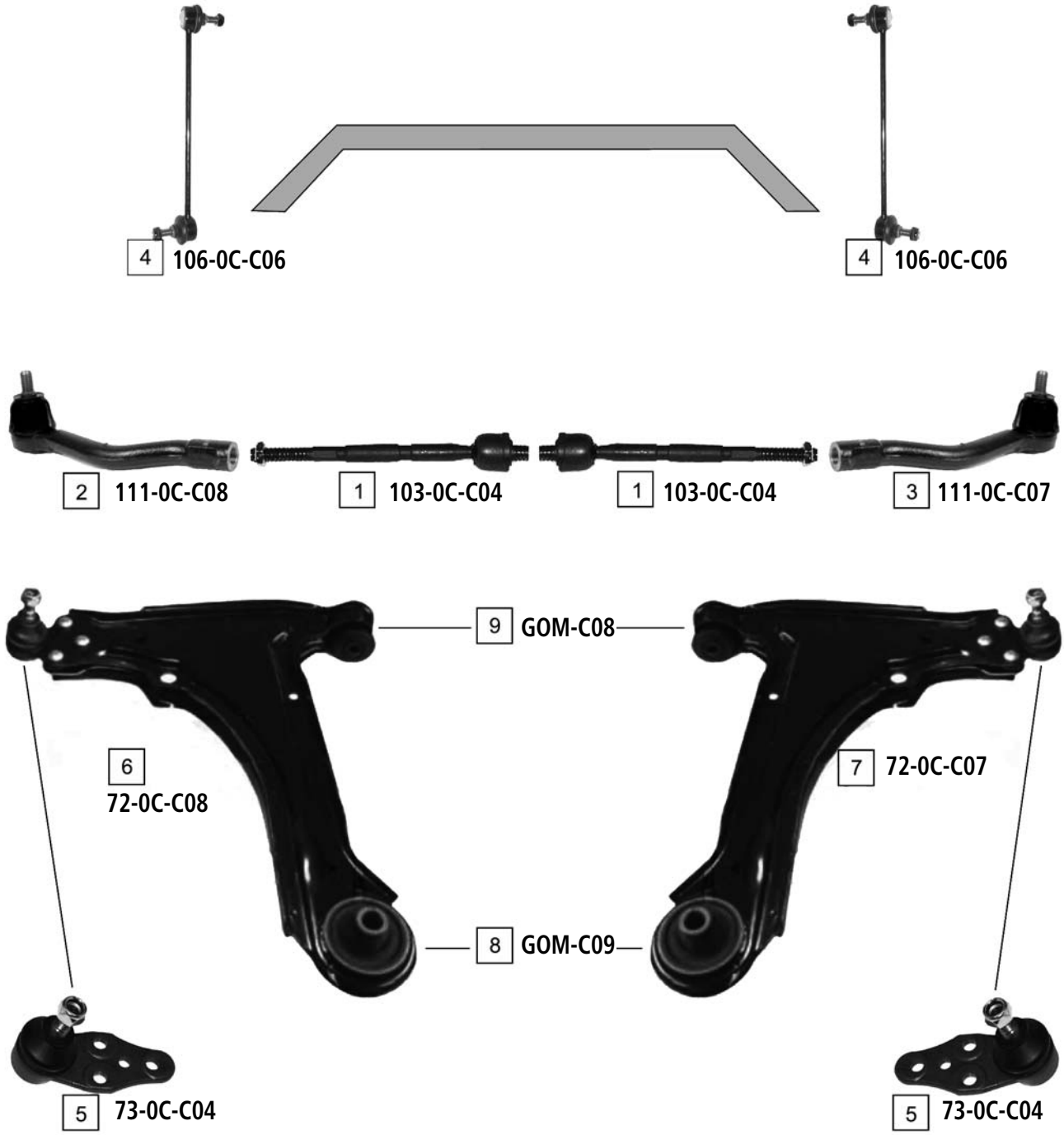

Ref.	ASHIKA CODE	Description	OEM	Measures	Ref.	ASHIKA CODE	Description	OEM	Measures
1	103-0C-C04	Axial Joint	521564	th: MM16X1.5R L:240	6	72-0C-C08	TCA Left	96378347	
2	111-0C-C08	Tie Rod End Left	96261378	c:13.2 th:FM14X1.5R	7	72-0C-C07	TCA Right	96378348	
3	111-0C-C07	Tie Rod End Right	96261379	c:13.2 th:FM14X1.5R	8	GOM-C09	Silentblock For Susp.Arm	96261107	
4	106-0C-C06	Stabiliser Link	96391875	L: 260	9	GOM-C08	Silentblock For Susp.Arm	96378346	
5	73-0C-C04	Ball Joint	96261108	c: 16					

PT CRUISER **06/2000 ->**

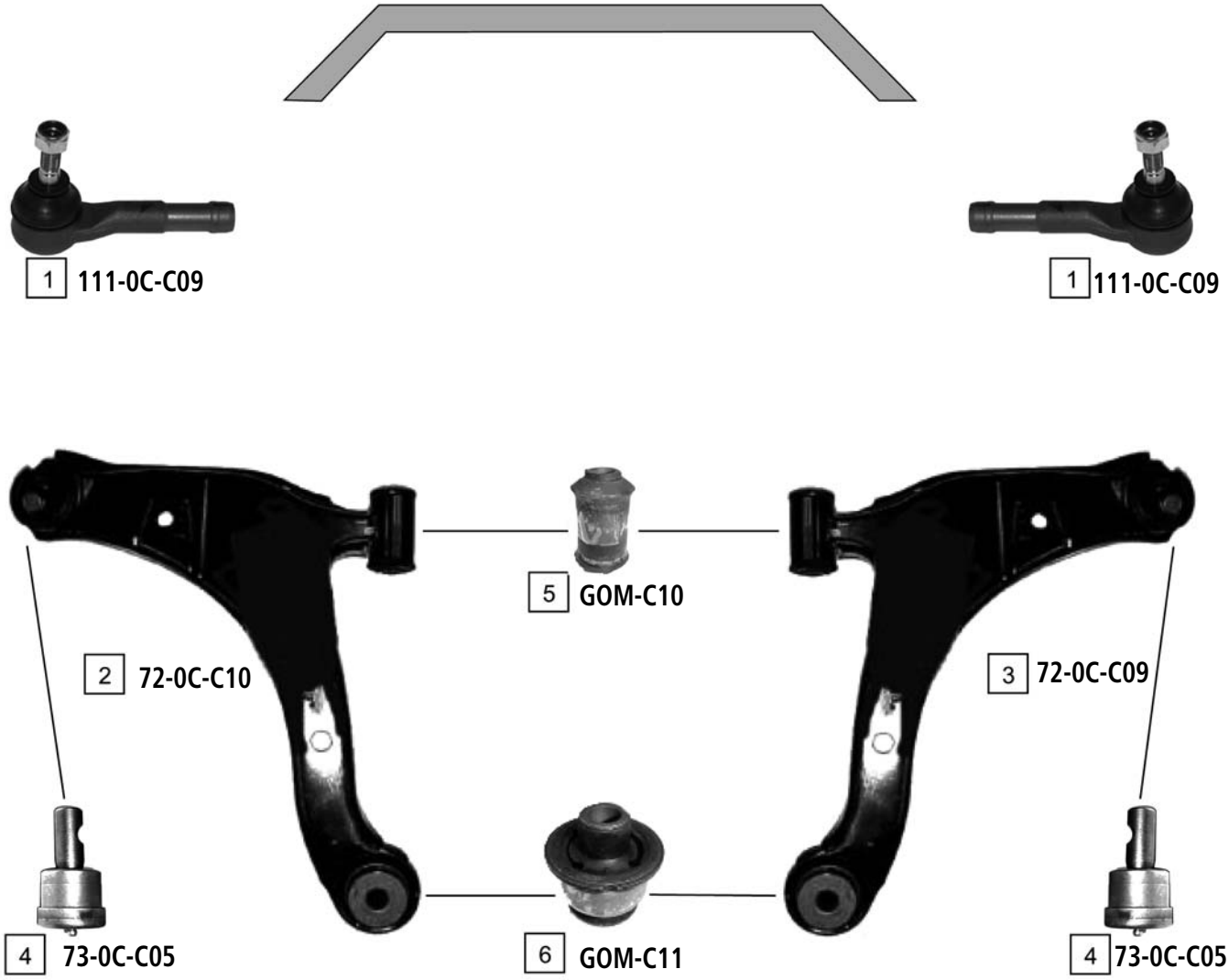

Ref.	ASHIKA CODE	Description	OEM	Measures	Ref.	ASHIKA CODE	Description	OEM	Measures
1	**111-0C-C09**	Tie Rod End	4762861-AA	c:12.5 th:FM14X1.5R	4	**73-0C-C05**	Ball joint	4656 010	c: 18
2	**72-0C-C10**	TCA Left Wbj	4656 731AH		5	**GOM-C10**	Silentblock For Susp.Arm	Part of 72-0C-C10 / 72-0C-C09	
3	**72-0C-C09**	TCA Right Wbj	4656 730AH		6	**GOM-C11**	Silentblock For Susp.Arm	4656 012AC	

O.E.M. names and numbers are used for reference purposes only Ashika assumes no responsibility for possible errors

VOYAGER I (ES) **01/1984 - 01/1995**

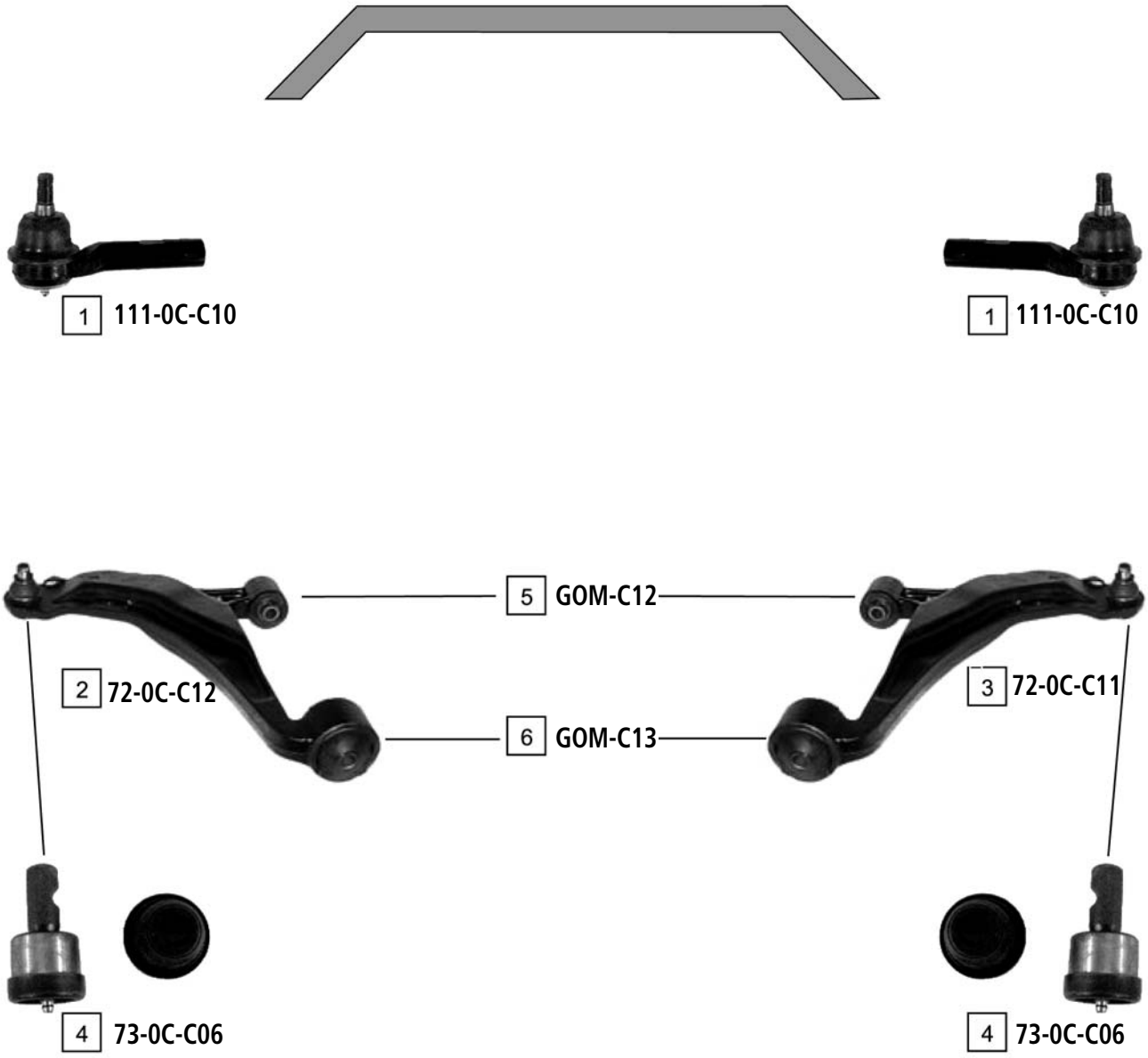

Ref.	ASHIKA CODE	Description	OEM	Measures	Ref.	ASHIKA CODE	Description	OEM	Measures
1	**111-0C-C10**	Tie Rod End	52744700	c:12.8 th:MM14X1.5R	4	**73-0C-C06**	Ball Joint	4694 747	c: 18
2	**72-0C-C12**	TCA Left Wbj	4728885	c:18	5	**GOM-C12**	Silentblock For Susp.Arm	272084	d: 39
3	**72-0C-C11**	TCA Right Wbj	4728884	c:18	6	**GOM-C13**	Silentblock For Susp.Arm	5272098	d: 58

VOYAGER II (GS) **01/1995 - 03/2001**

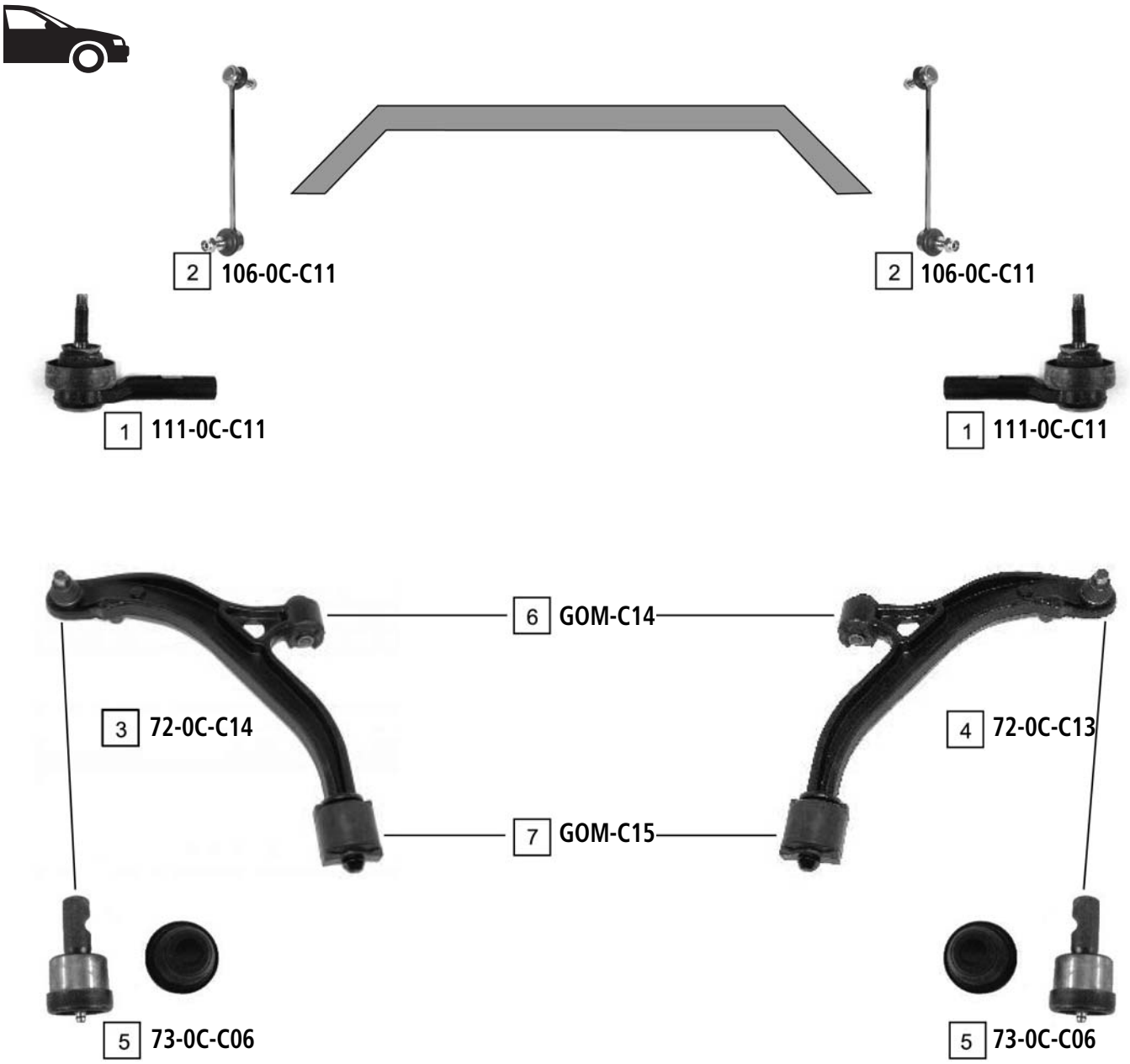

Ref.	ASHIKA CODE	Description	OEM	Measures	Ref.	ASHIKA CODE	Description	OEM	Measures
1	**111-0C-C11**	Tie Rod End	4797706	c: 12.5 th: FM14X1.5R	5	**73-0C-C06**	Ball Joint	4694 747	c: 18
2	**106-0C-C11**	Stabiliser Link	4743 669AA	L: 310	6	**GOM-C14**	Silentblock For Susp.Arm	Part of 72-0C-C14 / 72-0C-C13	d: 39.3
3	**72-0C-C14**	TCA Left	4694761-C	c: 18	7	**GOM-C15**	Silentblock For Susp.Arm	Part of 72-0C-C14 / 72-0C-C13	d: 18.2
4	**72-0C-C13**	TCA Right	4694760-C	c: 18					

O.E.M. names and numbers are used for reference purposes only Ashika assumes no responsibility for possible errors

VOYAGER III (RG) **02/2000->**

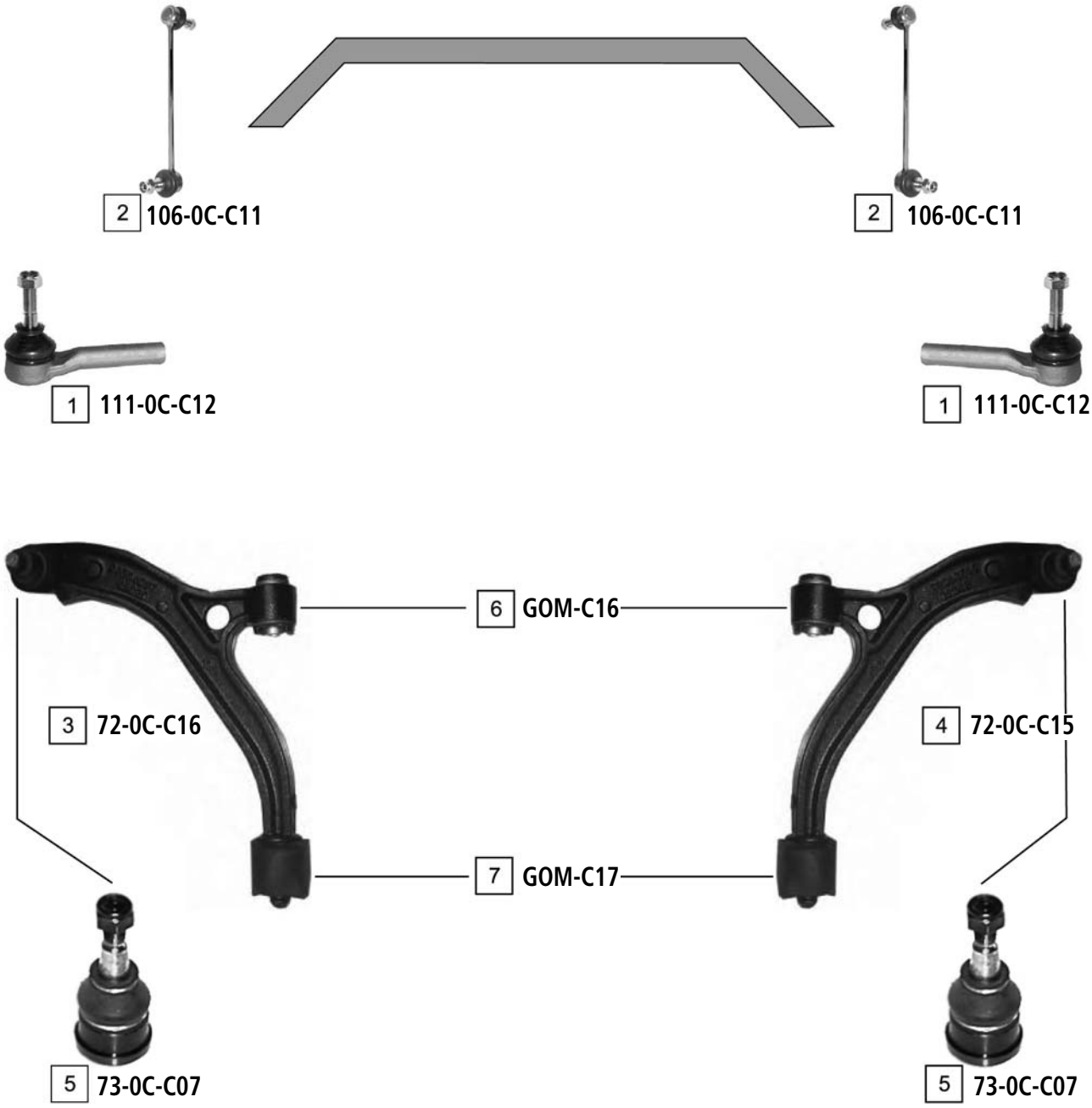

Ref.	ASHIKA CODE	Description	OEM	Measures	Ref.	ASHIKA CODE	Description	OEM	Measures
1	**111-0C-C12**	Tie Rod End	5066 373AA	c: 12.5 th: FM14X1.5R	5	**73-0C-C07**	Ball Joint	Part of 72-0C-C16/72-0C-C15	c: 13.5
2	**106-0C-C11**	Stabiliser Link	4743 669AA	L: 310	6	**GOM-C16**	Silentblock For Susp.Arm	Part of 72-0C-C16/72-0C-C15	
3	**72-0C-C16**	TCA Left	4766543-AA	c: 13.5	7	**GOM-C17**	Silentblock For Susp.Arm	4743095-AA	
4	**72-0C-C15**	TCA Right	4766542-AA	c: 15.3					

DAEWOO
KALOS

KALOS (KLAS) **09/2002->**

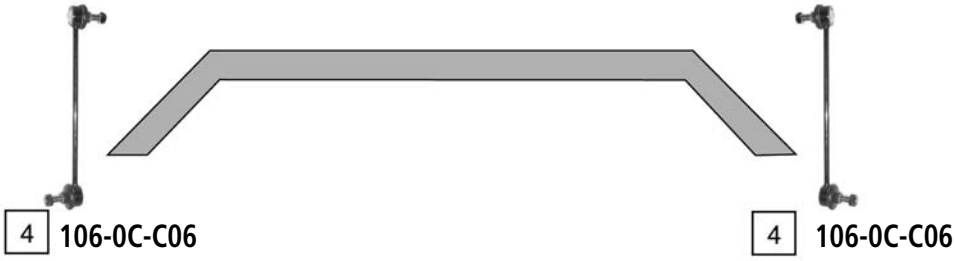

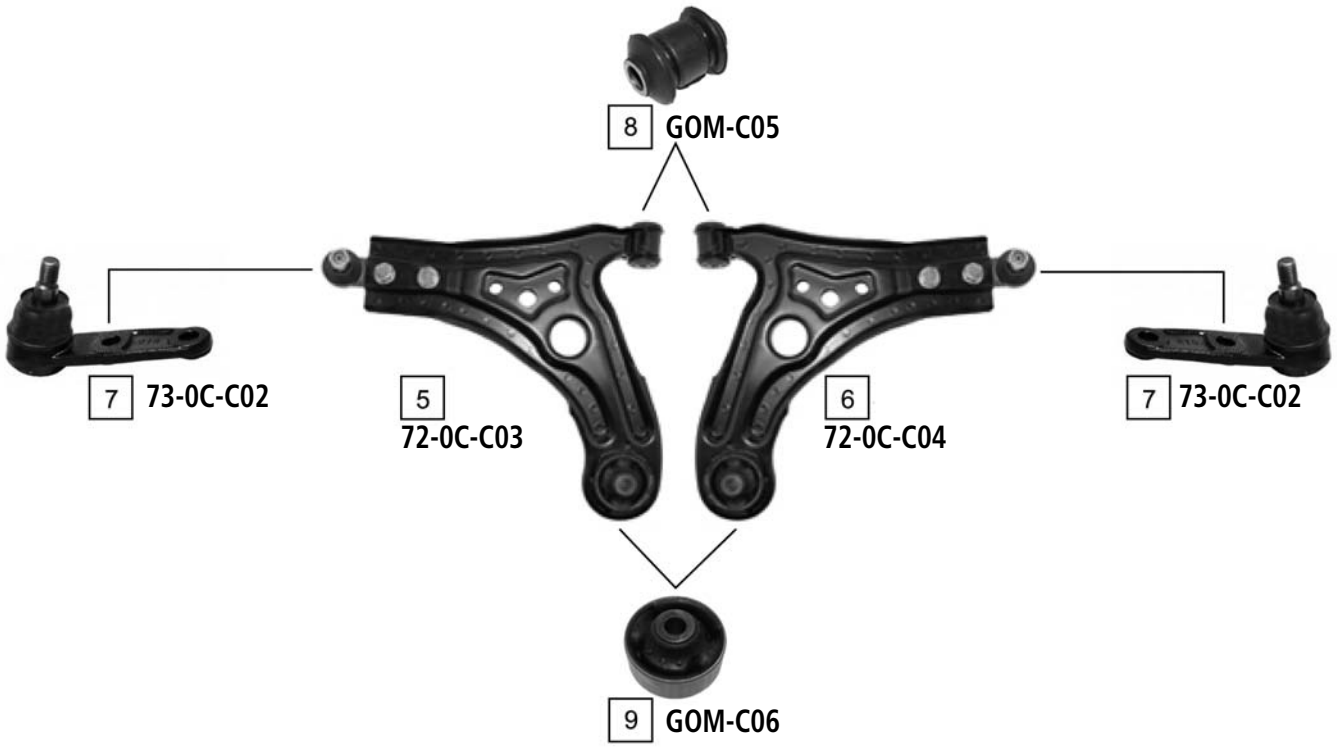

Ref.	ASHIKA CODE	Description	OEM	Measures	Ref.	ASHIKA CODE	Description	OEM	Measures
1	**103-0C-C03**	Axial Joint	-	th: MM16X1.5R L:200	6	**72-0C-C04**	TCA Right	96535082	c: 14.8
2	**111-0C-C03**	Tie Rod End Left	9374-0722	c:13.2 th:FM14X1.5R	7	**73-0C-C02**	Ball Joint	96535089	c: 14.8
3	**111-0C-C04**	Tie Rod End Right	9374-0723	c:13.2 th:FM14X1.5R	8	**GOM-C05**	Silentblock For Susp.Arm	Part of 72-0C-C03 / 72-0C-C04	d: 28
4	**106-0C-C06**	Stabiliser Link	96391875	L: 260	9	**GOM-C06**	Silentblock For Susp.Arm	Part of 72-0C-C03 / 72-0C-C04	d: 60
5	**72-0C-C03**	TCA Left	96535081	c: 14.8					

O.E.M. names and numbers are used for reference purposes only Ashika assumes no responsibility for possible errors

KORANDO (KJ) **01/1999->**

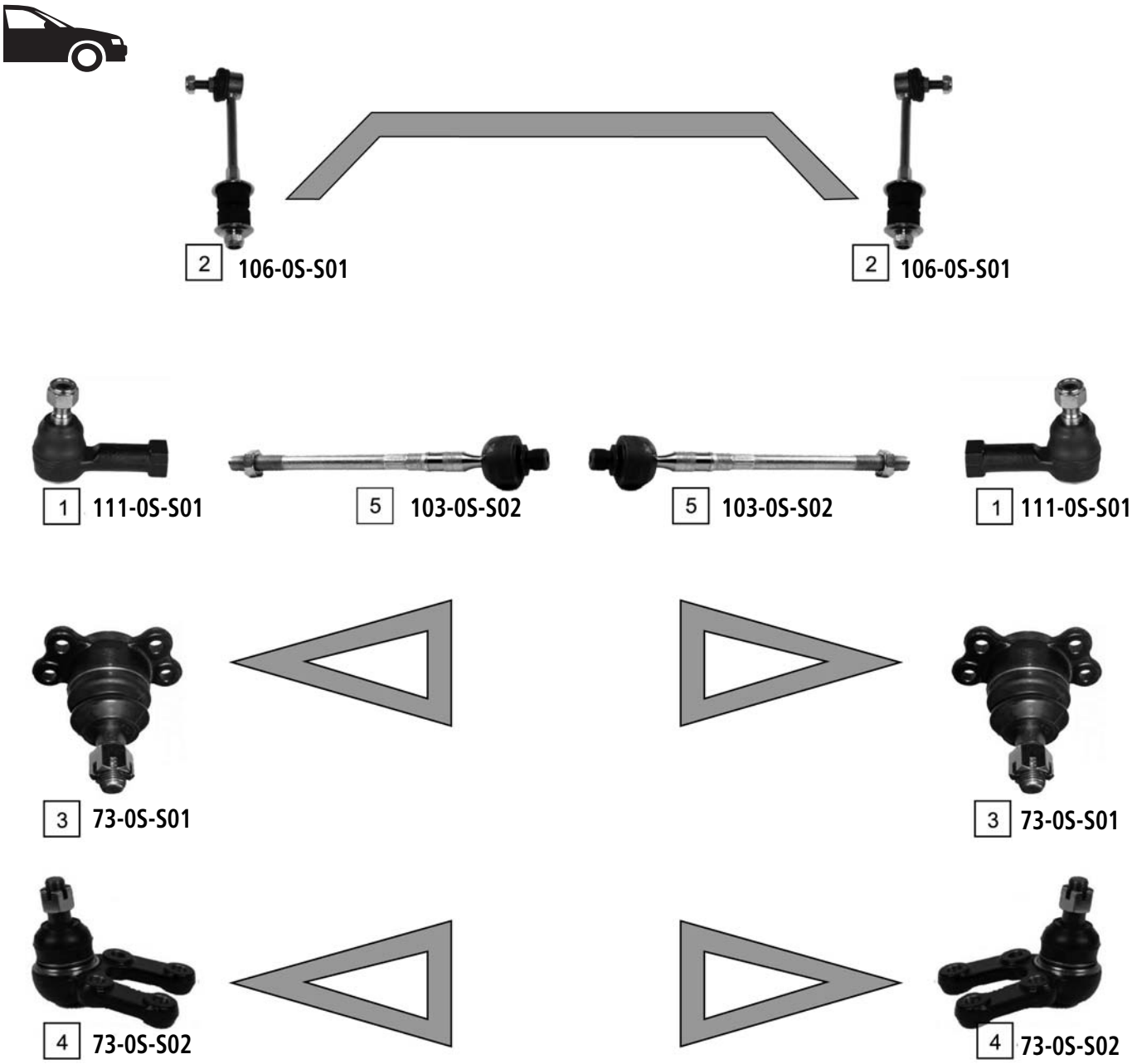

Ref.	ASHIKA CODE	Description	OEM	Measures	Ref.	ASHIKA CODE	Description	OEM	Measures
1	**111-0S-S01**	Tie Rod End	4666005501	c:16 th:FM14X1.5R	4	**73-0S-S02**	Ball Joint	4450505001	c:17.6
2	**106-0S-S01**	Stabiliser Link	4475005001		5	**103-0S-S02**	Axial Joint	Part of	
3	**73-0S-S01**	Ball Joint	4443003011	c:17.6					

DAEWOO
LANOS-ESPERO-NEXIA

LANOS	05/1997->
ARANOS	01/1991-01/1995
EXPERO (KLEJ)	10/1991-09/1999
NEXIA-RACER-CIELO (KLETN)	02/1995-08/1997

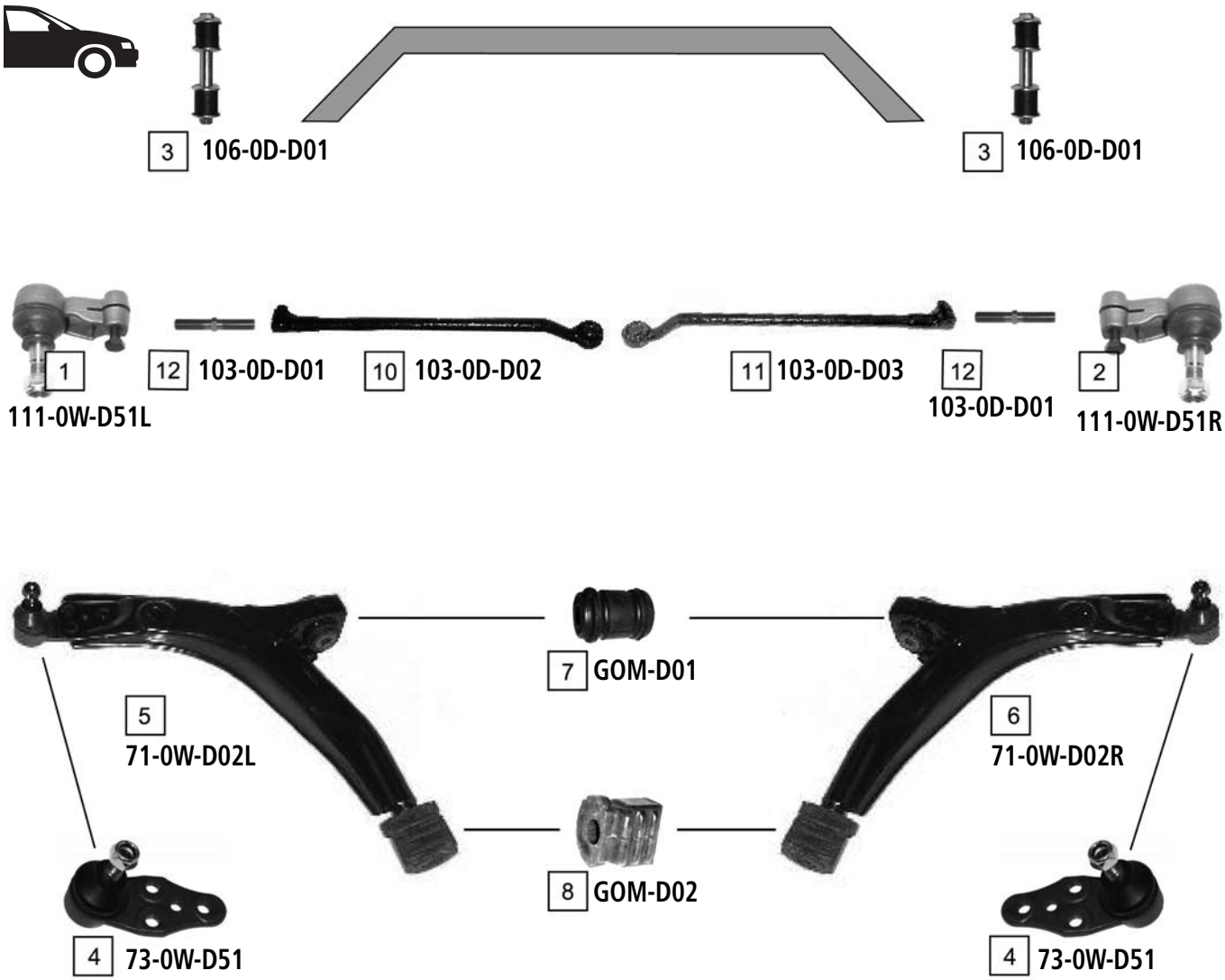

Ref.	ASHIKA CODE	Description	OEM	Measures	Ref.	ASHIKA CODE	Description	OEM	Measures
1	111-0W-D51L	Tie Rod End Left	324.039	c:13 th:FM16X1.5R	7	GOM-D01	Silentblock For Susp.Arm	352349	d: 39.6
2	111-0W-D51R	Tie Rod End Right	324.038	c:13 th:FM16X1.5L	8	GOM-D02	Silentblock For Susp.Arm	352335	d: 55.4
3	106-0D-D01	Stabiliser Link	1603 148	L:190	9	GOM-D03	Silentblock For Susp.Arm	4 02 645	d: 59.1
4	73-0W-D51	Ball Joint Lower	1.603.120	c: 13.4	10	103-0D-D02	Axial Joint	078 48 281	
5	71-0W-D02L	TCA Left	352 123	c: 13.4	11	103-0D-D03	Axial Joint	078 48 282	
6	71-0W-D02R	TCA Right	352.124	c: 13.4	12	103-0D-D01	Adjusting Bolt	322575	-

O.E.M. names and numbers are used for reference purposes only Ashika assumes no responsibility for possible errors

LEGANZA (KLAV) **06/1997-12/2002**

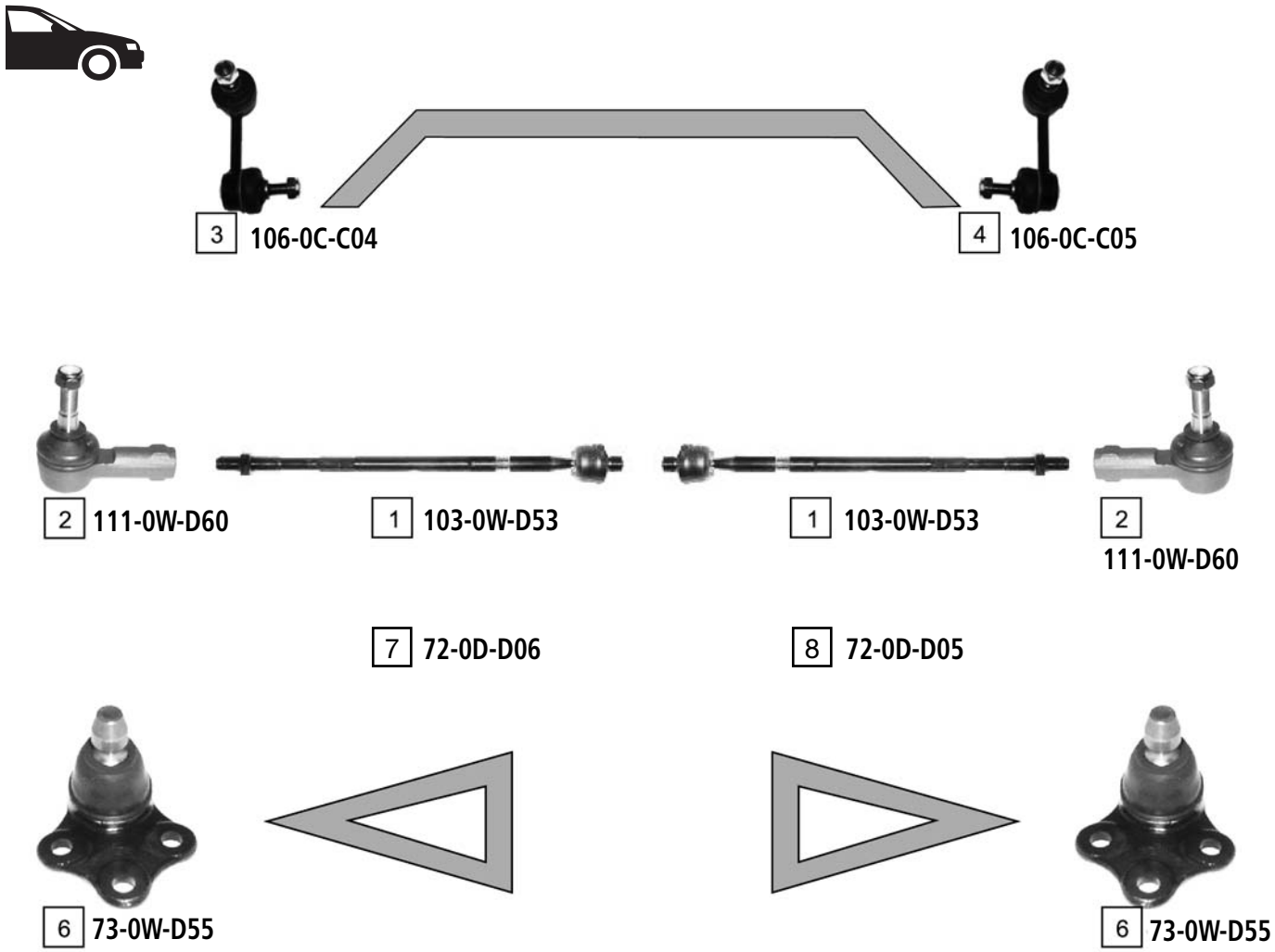

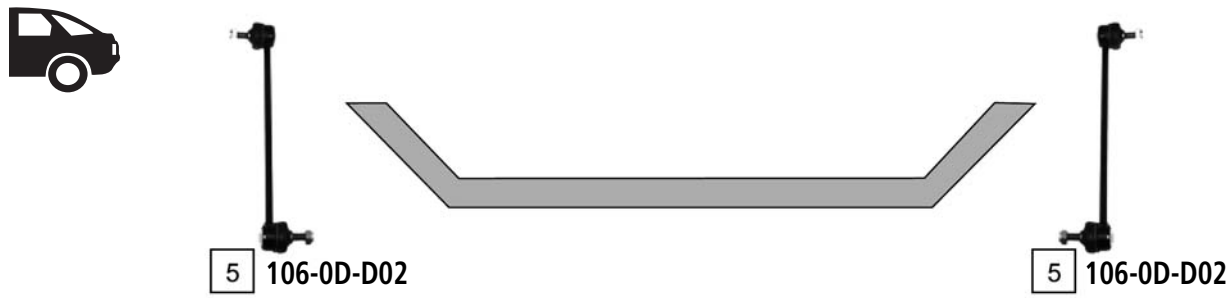

Ref.	ASHIKA CODE	Description	OEM	Measures	Ref.	ASHIKA CODE	Description	OEM	Measures
1	**103-0W-D53**	Axial Joint	520898	th:MM16X1.5R L:360	5	**106-0D-D02**	Stabiliser Link	96207628	L:267
2	**111-0W-D60**	Tie Rod End	9620 5809	c:13.2 th:FM14X1.5R	6	**73-0W-D55**	Ball Joint	9621 3119	c: 18
3	**106-0C-C04**	Stabiliser Link Left	96225859	L:79	7	**72-0D-D06**	TCA Left	96213117	
4	**106-0C-C05**	Stabiliser Link Right	96225858	L:79	8	**72-0D-D05**	TCA Right	96213118	

MATIZ (KLYA) **09/1998->**

MS

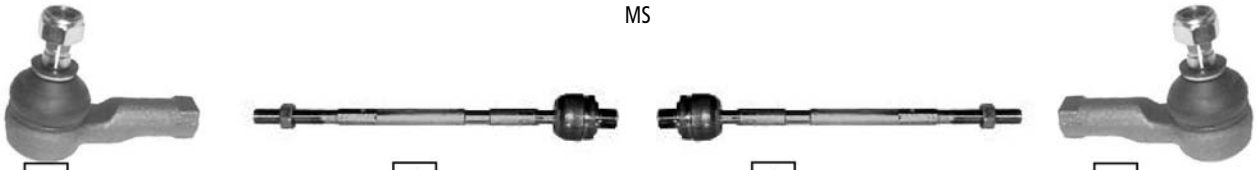

3 111-0W-D55 | 1 103-0W-D54 | 1 103-0W-D54 | 3 111-0W-D55

PS

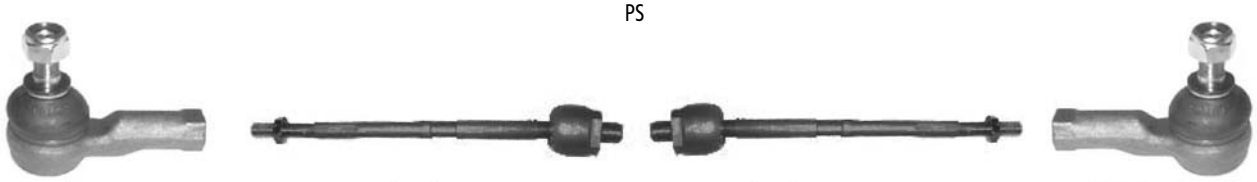

4 111-0D-D56 | 2 111-0W-D99 | 2 111-0W-D99 | 4 111-0D-D56

5 71-08-803 | 6 GOM-C07 | 5 71-08-803

Ref.	ASHIKA CODE	Description	OEM	Measures	Ref.	ASHIKA CODE	Description	OEM	Measures
1	**103-0W-D54**	Axial Joint	9374 1074	th:MM16X1.5R L:250	4	**111-0D-D56**	Tie Rod End	KBJ 029	c:12.5 th:FM12X1.5R
2	**111-0W-D99**	Axial Joint	9374 1092	th:MM16X1.5R L:251	5	**71-08-803**	TCA	9631-6765	c: 15
3	**111-0W-D55**	Tie Rod End	48810-A78B00	c:12.5 th:FM12X1.5R	6	**GOM-C07**	Silentblock For Susp.Arm	9638 0613	d: 27.5

O.E.M. names and numbers are used for reference purposes only Ashika assumes no responsibility for possible errors

MUSSO (FJ) **01/1999->**

2 106-0S-S01

2 106-0S-S01

1 111-0S-S01

5 103-0S-S02

5 103-0S-S02

1 111-0S-S01

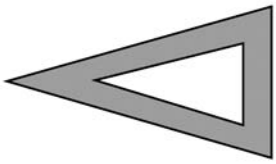

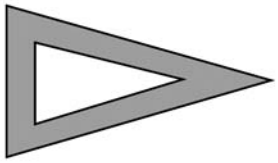

3 73-0S-S01

3 73-0S-S01

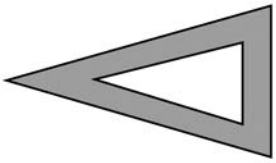

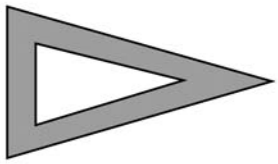

4 73-0S-S02

4 73-0S-S02

Ref.	ASHIKA CODE	Description	OEM	Measures	Ref.	ASHIKA CODE	Description	OEM	Measures
1	**111-0S-SO1**	Tie Rod End	4666005501	c:16 th:FM14X1.5R	4	**73-0S-SO2**	Ball Joint	4450505001	c:17.6
2	**106-0S-SO1**	Stabiliser Link	4475005001		5	**103-0S-SO2**	Axial Joint	Part of	
3	**73-0S-SO1**	Ball Joint	4443003011	c:17.6					

NUBIRA (KLAJ) **05/1997-07/2003**

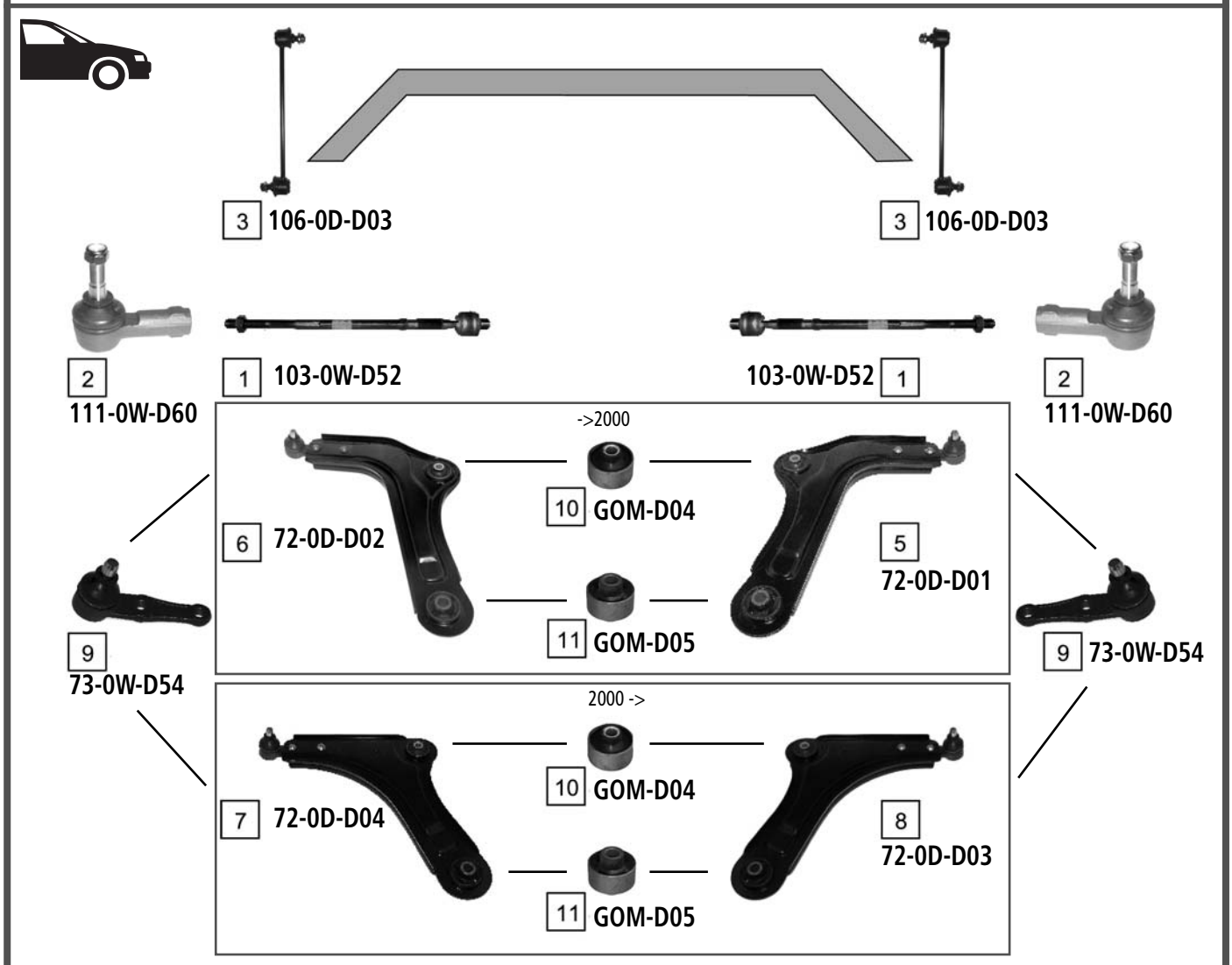

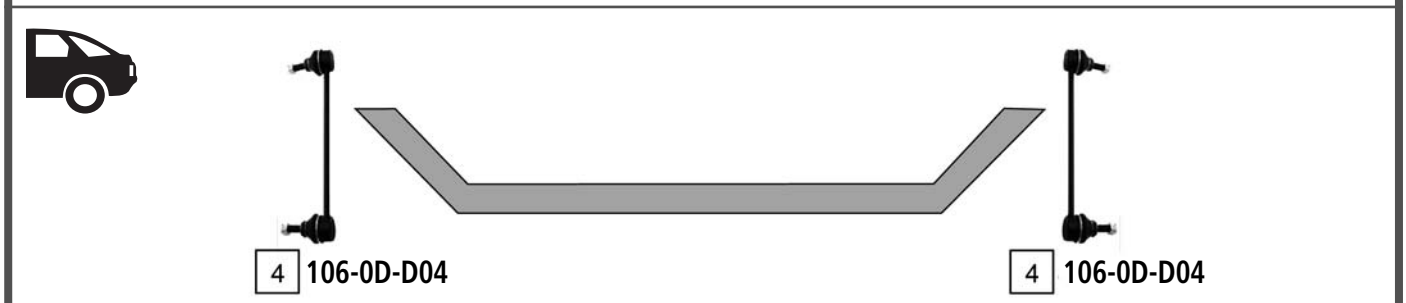

Ref.	ASHIKA CODE	Description	OEM	Measures	Ref.	ASHIKA CODE	Description	OEM	Measures
1	**103-0W-D52**	Axial Joint	520672	th:MM16X1.5 L:345	7	**72-0D-DO4**	TCA Left	96 268 454	
2	**111-0W-D60**	Tie Rod End	96205809	c:13.2 th:FM14x1.5R	8	**72-0D-DO3**	TCA Right	96 268 455	
3	**106-0D-DO3**	Stabilisatorstang	96300627	L:268	9	**73-0W-D54**	Ball Joint	9630 0648	c:16
4	**106-0D-DO4**	Stabiliser link	9630 0222	L:247	10	**GOM-DO4**	Silentblock For Susp.Arm	Part of 72-0D-D02 / 72-0D-D01/ 72-0D-D04/72-0D-D03	d:49.3
5	**72-0D-DO1**	TCA Right	96 268 440	c:16	11	**GOM-DO5**	Silentblock For Susp.Arm	Part of 72-0D-D02 / 72-0D-D01/ 72-0D-D04/72-0D-D03	d:52.5
6	**72-0D-DO2**	TCA Left	96 268 439	c:16					

O.E.M. names and numbers are used for reference purposes only Ashika assumes no responsibility for possible errors

REZZO (KLAU) - TACUMA **09/2000->**

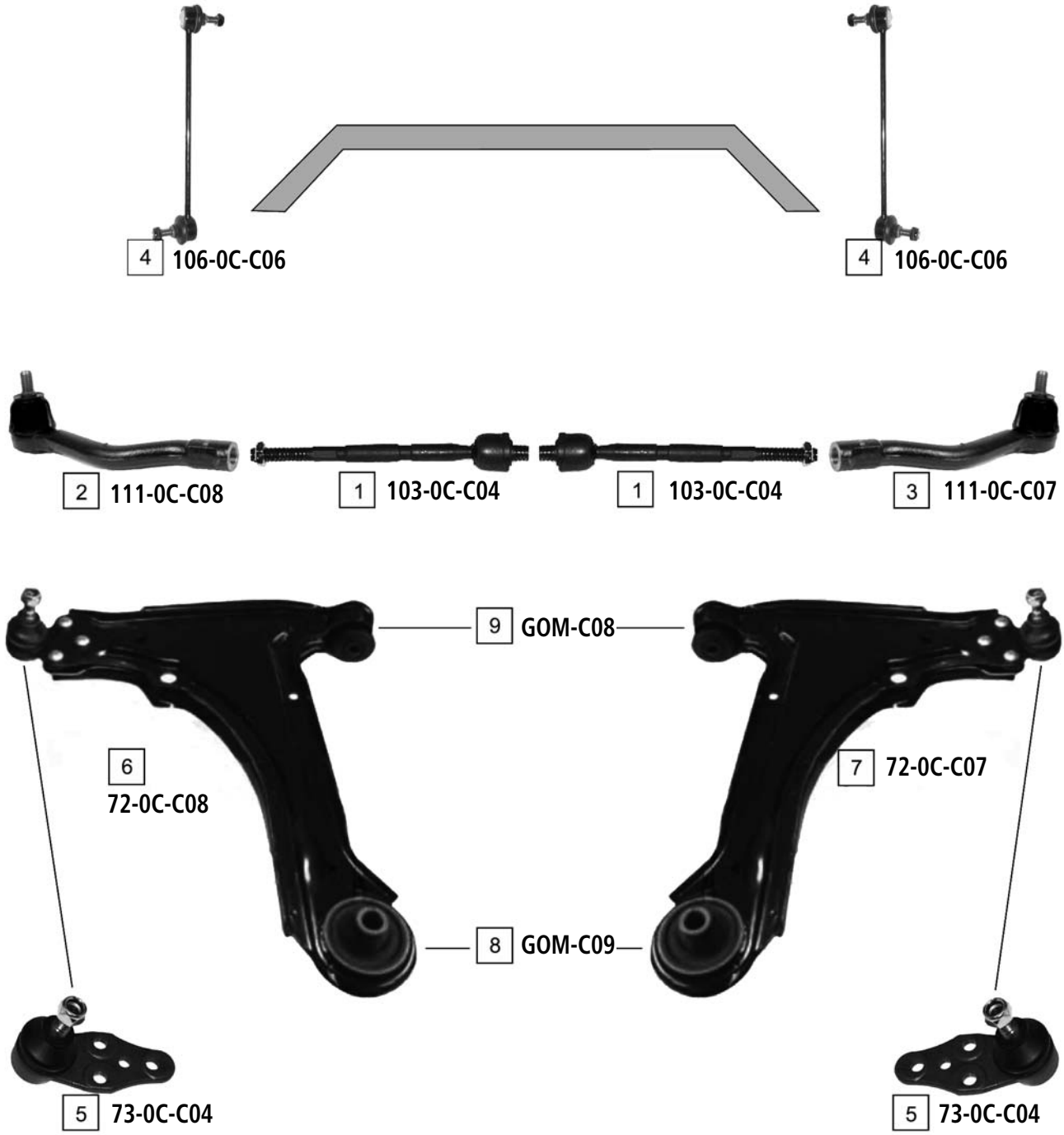

Ref.	ASHIKA CODE	Description	OEM	Measures	Ref.	ASHIKA CODE	Description	OEM	Measures
1	**103-0C-C04**	Axial Joint	521564	th: MM16X1.5R L:240	6	**72-0C-C08**	TCA Left	96378347	
2	**111-0C-C08**	Tie Rod End Left	96261378	c:13.2 th:FM14X1.5R	7	**72-0C-C07**	TCA Right	96378348	
3	**111-0C-C07**	Tie Rod End Right	96261379	c:13.2 th:FM14X1.5R	8	**GOM-C09**	Silentblock For Susp.Arm	96261107	
4	**106-0C-C06**	Stabiliser Link	96391875	L: 260	9	**GOM-C08**	Silentblock For Susp.Arm	96378346	
5	**73-0C-C04**	Ball Joint	96261108	c: 16					

TICO (KLY3) **02/1995-12/2000**

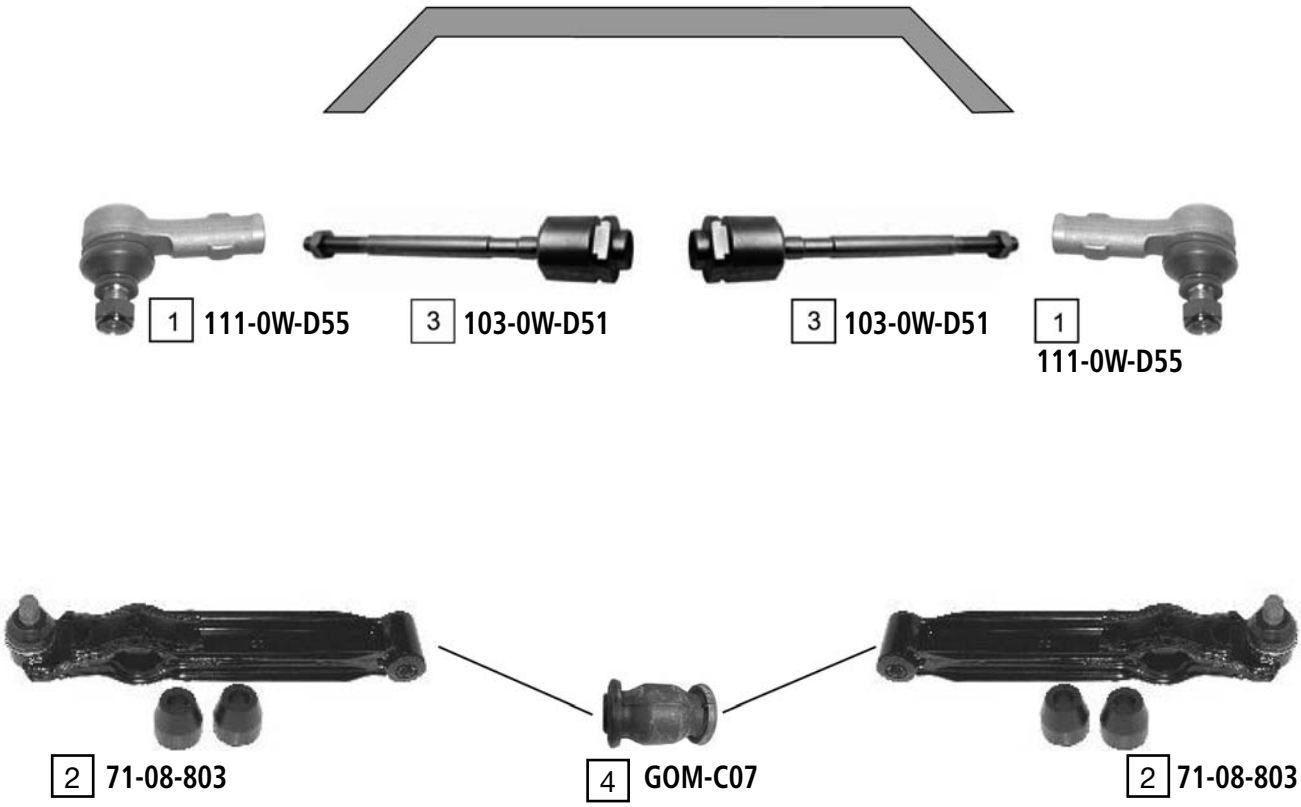

Ref.	ASHIKA CODE	Description	OEM	Measures	Ref.	ASHIKA CODE	Description	OEM	Measures
1	**111-0W-D55**	Tie Rod End	9612-9753	c:12.6 th:FM12X1.5R	3	**103-0W-D51**	Axial Joint	48830 A78B00-000	th:FM14X1.5R L:228
2	**71-08-803**	TCA	96316765	c: 15	4	**GOM-C07**	Silentblock For Susp.Arm	96380613	D: 27.5

O.E.M. names and numbers are used for reference purposes only Ashika assumes no responsibility for possible errors

APPLAUSE I - II (A101, A111) **06/1989-07/1997**

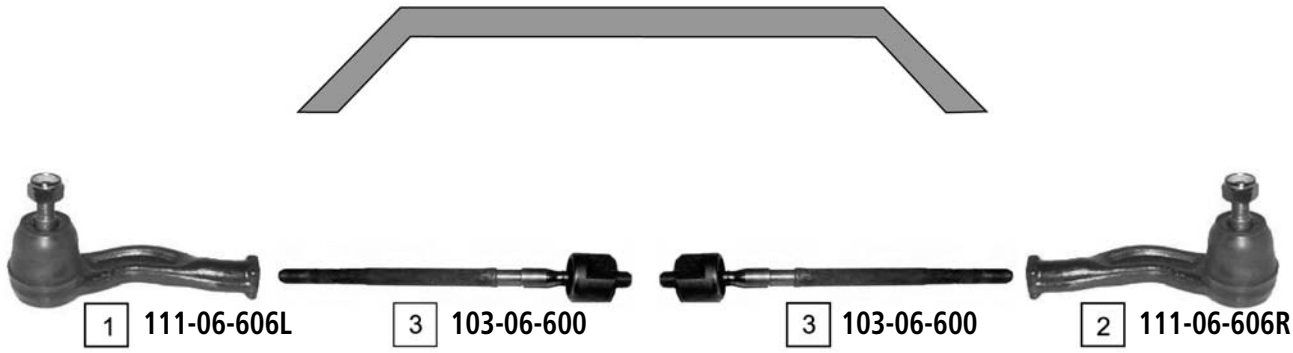

Ref.	ASHIKA CODE	Description	OEM	Measures	Ref.	ASHIKA CODE	Description	OEM	Measures
1	**111-06-606L**	Tie Rod End Left	4504787781	c:12 th:FM12X1.25R	3	**103-06-600**	Axial Joint	45503 87102	th:MM12X1.25R L:252
2	**111-06-606R**	Tie Rod End Right	45046-87781	c:12 th:FM12X1.25R					

CHARADE II (G11, G30) **01/1983-12/1986**

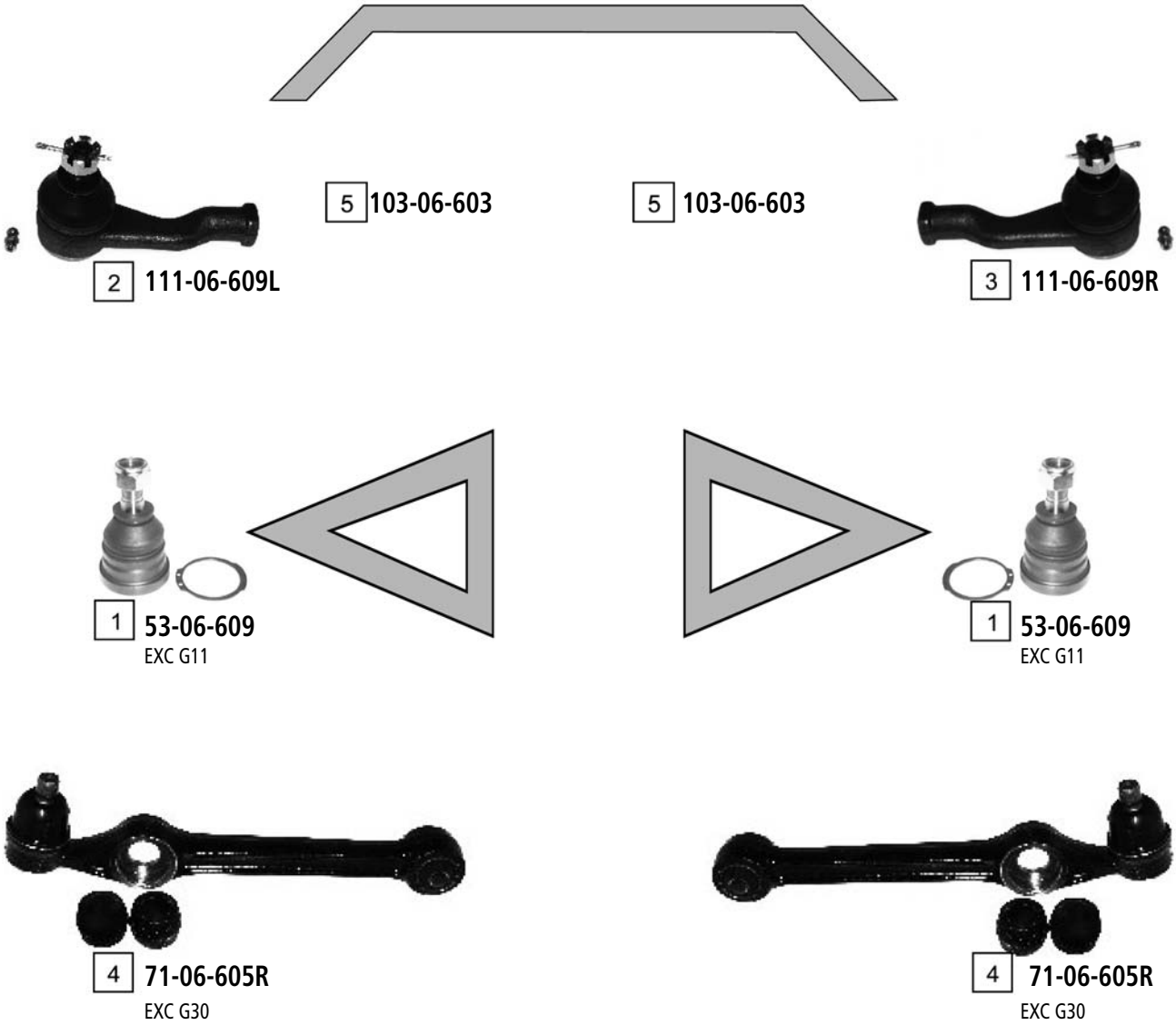

Ref.	ASHIKA CODE	Description	OEM	Measures	Ref.	ASHIKA CODE	Description	OEM	Measures
1	**53-06-609**	Ball Joint Lower	43308-12030	c:14.5	4	**71-06-605R**	TCA Upper	48068-87705	c:15
2	**111-06-609L**	Tie Rod End Left	45047-87780	c:12 th:FM12X1.25R	5	**103-06-603**			
3	**111-06-609R**	Tie Rod End Right	45046-87282	c:12 th:FM12X1.25R					

O.E.M. names and numbers are used for reference purposes only Ashika assumes no responsibility for possible errors

CHARADE III (G100, G101, G102) **01/1987 - 01/1993**

MS 01/1989->

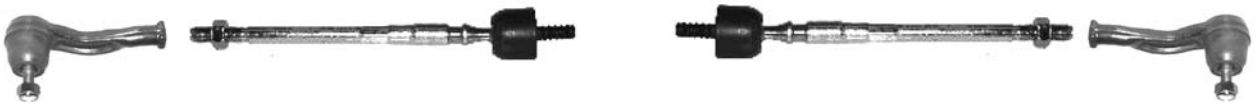

5 **111-06-606L** 3 **103-06-605** 3 **103-06-605** 6 **111-06-606R**

PS 01/1990->

5 **111-06-606L** 4 **103-06-606** 4 **103-06-606** 6 **111-06-606R**

1 **71-06-698**

2 **71-06-699**

Ref.	ASHIKA CODE	Description	OEM	Measures	Ref.	ASHIKA CODE	Description	OEM	Measures
1	**71-06-698**	TCA Left	48069-87706	c:16	4	**103-06-606**	Axial Joint	45503-87706	th:MM12X1.25R L:230
2	**71-06-699**	TCA Right	48068-87706	c:16	5	**111-06-606L**	Tie Rod End Left	4504787781	c:12 th:FM12X1.25R
3	**103-06-605**	Axial Joint	45503-87708	th:MM11X1.5R L:240	6	**111-06-606R**	Tie Rod End Right	45046-87781	c:12 th:FM12X1.25R

CHARADE IV (G200, G202, G203) **01/1993-12/1996**

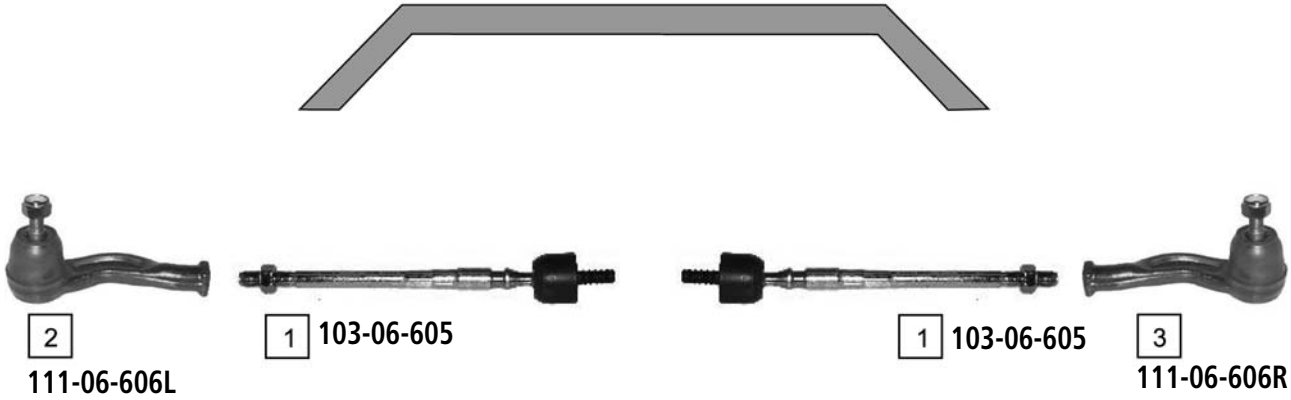

Ref.	ASHIKA CODE	Description	OEM	Measures	Ref.	ASHIKA CODE	Description	OEM	Measures
1	**103-06-605**	Axial Joint	45503-87708	th:MM11X1.5R L:240	3	**111-06-606R**	Tie Rod End Right	45046-87781	c:12 th:FM12X1.25R
2	**111-06-606L**	Tie Rod End Left	4504787781	c:12 th:FM12X1.25R					

O.E.M. names and numbers are used for reference purposes only Ashika assumes no responsibility for possible errors

CHARMANT (A) **11/1981 - 01/1989**

A10, A20, A30, A40, A45

1 111-06-604

1 111-06-604

A35, A55, A60

3 108-06-622

4 103-02-201

4 103-02-201

3 108-06-622

2 53-06-609

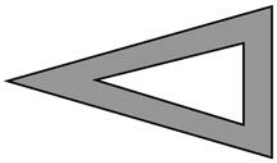

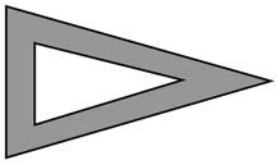

2 53-06-609

Ref.	ASHIKA CODE	Description	OEM	Measures	Ref.	ASHIKA CODE	Description	OEM	Measures
1	**111-06-604**	Tie Rod End	45046 19065	c:12.9 th:MM14X1.5L	3	**108-06-622**	Tie Rod	45460-19125	-
2	**53-06-609**	Ball Joint Lower	43308-12030	c:14.5	4	**103-02-201**	Axial Joint	45503-10020	th:MM14X1.5R L:146

DAIHATSU
CUORE

CUORE II (L80, L81)	09/1985-12/1990
CUORE III (L201)	08/1990-12/1994
CUORE IV (L501)	01/1995-11/1996

1 111-06-609L

2 111-06-609R

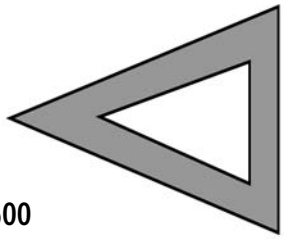

3 73-06-600

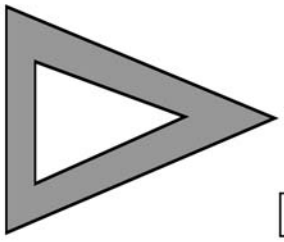

3 73-06-600

Ref.	ASHIKA CODE	Description	OEM	Measures	Ref.	ASHIKA CODE	Description	OEM	Measures
1	111-06-609L	Tie Rod End Left	45047-87780	c:12 th:FM12X1.25R	3	73-06-600	Ball Joint	48068 87206	
2	111-06-609R	Tie Rod End Right	45046-87282	c:12 th:FM12X1.25R					

O.E.M. names and numbers are used for reference purposes only Ashika assumes no responsibility for possible errors

CUORE V (L5) **10//1996 - 10/1998**

MS

3 111-06-609L 6 103-06-607 6 103-06-607 4 111-06-609R

PS

3 111-06-609L 5 103-06-608 5 103-06-608 4 111-06-609R

1 71-06-602

2 71-06-601

Ref.	ASHIKA CODE	Description	OEM	Measures	Ref.	ASHIKA CODE	Description	OEM	Measures
1	**71-06-602**	TCA Left Wbj	49069-97202		4	**111-06-609R**	Tie Rod End Right	45046-87282	c:12 th:FM12X1.25R
2	**71-06-601**	TCA Right Wbj	49068-97202		5	**103-06-608**	Axial Joint	45503-97204	th:MM14X1.5R L:224
3	**111-06-609L**	Tie Rod End Left	45047-87780	c:12 th:FM12X1.25R	6	**103-06-607**	Axial Joint	45503-97203	th:MM14X1.5R L:224

CUORE VI - VII **10/1998 ->**

-> 09/1999 MS

5 111-06-609L 8 103-06-607 8 103-06-607 6 111-06-609R

10/1999 -> PS

9 111-06-612 7 103-06-608 7 103-06-608 10 111-06-611

-> 03/2002

3 71-06-604 4 71-06-603

04/2002 ->

1 71-06-606 2 71-06-605

Ref.	ASHIKA CODE	Description	OEM	Measures	Ref.	ASHIKA CODE	Description	OEM	Measures
1	**71-06-606**	TCA Left	48069-97203		6	**111-06-609R**	Tie Rod End Right	45046-87282	c:12 th:FM12X1.25R
2	**71-06-605**	TCA Right	48068-97203		7	**103-06-608**	Axial Joint	45503-97204	th:MM14X1.5R L:224
3	**71-06-604**	TCA Left	48069-97202		8	**103-06-607**	Axial Joint	45503-97203	th:MM14X1.5R L:224
4	**71-06-603**	TCA Right	48068-97202		9	**111-06-612**	Tie Rod End Left	45047-97203	
5	**111-06-609L**	Tie Rod End Left	45047-87780	c:12 th:FM12X1.25R	10	**111-06-611**	Tie Rod End Right	45046-97203	

O.E.M. names and numbers are used for reference purposes only Ashika assumes no responsibility for possible errors

FEROZA (F300) **10-1988 ->**

1 **111-06-602L**

2 **111-06-602R**

Ref.	ASHIKA CODE	Description	OEM	Measures	Ref.	ASHIKA CODE	Description	OEM	Measures
1	**111-06-602L**	Tie Rod End Left	45047 87303	c:16.4 th:MM20X1.5L	2	**111-06-602R**	Tie Rod End Right	45046 87680	c:16.3 th:MM20X1.5L

GRAN MOVE (G3) **10/1996 - 07/2002**

-> 06/1998

8 **111-06-614**

6 **103-06-609**

6 **103-06-609**

9 **111-06-613**

07/1998 ->

1 **111-06-616**

7 **103-06-610**

7 **103-06-610**

2 **111-06-617**

4 **72-06-600**
-> 06/1998

5 **72-06-601**
-> 06/1998

3 **106-06-600**

3 **106-06-600**

Ref.	ASHIKA CODE	Description	OEM	Measures	Ref.	ASHIKA CODE	Description	OEM	Measures
1	**111-06-616**	Tie Rod End Left	45047-97204-000		6	**103-06-609**	Axial Joint	45503-87710	th:MM12X1.25R L:234
2	**111-06-617**	Tie Rod End Right	45046-97204-000		7	**103-06-610**	Axial Joint	45503-87714	th:MM12X1.25R L:234
3	**106-06-600**	Stabiliser Link	48802-87703	L:55.5	8	**111-06-614**	Tie Rod End Left	45047-87706	
4	**72-06-600**	TCA	48069-87710		9	**111-06-613**	Tie Rod End Right	45046-87707	
5	**72-06-601**	TCA	48068-87711						

O.E.M. names and numbers are used for reference purposes only Ashika assumes no responsibility for possible errors

HIJET **03/1982 ->**

1
111-06-607L

2
111-06-607R

3
71-06-608

4
71-06-607

Ref.	ASHIKA CODE	Description	OEM	Measures	Ref.	ASHIKA CODE	Description	OEM	Measures
1	**111-06-607L**	Tie Rod End Left	4504687503	c:11.8 th:FM14X1.5L	3	**71-06-608**		48068-87501-000	
2	**111-06-607**	Tie Rod End Right	45046-87503	c:11.8 th:FM14X1.5R	4	**71-06-607**		48069-87501-000	

MOVE (L6, L9) **10/1996 ->**

3 **111-06-609L**

5 **103-06-611**

5 **103-06-611**

4 **111-06-609R**

1 **71-06-610**

2 **71-06-609**

Ref.	ASHIKA CODE	Description	OEM	Measures	Ref.	ASHIKA CODE	Description	OEM	Measures
1	**71-06-610**	TCA	48069-87209		4	**111-06-609R**	Tie Rod End Right	45046-87282	c:12th:FM12X1.25R
2	**71-06-609**	TCA	48068-87209		5	**103-06-611**	Axial Joint	45503-87215	th:MM11X1.2R L:202
3	**111-06-609L**	Tie Rod End Left	45047-87780	c:12th:FM12X1.25R					

O.E.M. names and numbers are used for reference purposes only Ashika assumes no responsibility for possible errors

ROCKY (F7, F8) 02/1985 - 04/1993
WILDCAT/ROCKY (F70, F75) 02/1985 - 04/1987

1
111-06-602L

2
111-06-602R

Ref.	ASHIKA CODE	Description	OEM	Measures	Ref.	ASHIKA CODE	Description	OEM	Measures
1	111-06-602L	Tie Rod End Left	45047 87303	c:16.4 th:MM20X1.5L	2	111-06-602R	Tie Rod End Right	45046 87680	c:16.3 th:MM20X1.5L

TERIOS (J1) **10/1997-10/2005**

4 **111-06-610** 3 **103-06-612** 3 **103-06-612** 4 **111-06-610**

1 **72-06-602**

2 **72-06-603**

Ref.	ASHIKA CODE	Description	OEM	Measures	Ref.	ASHIKA CODE	Description	OEM	Measures
1	**72-06-602**	TCA Left	43069-87401	c: 15	3	**103-06-612**	Axial Joint	45460-87401	th: MM14X1.5R L:295
2	**72-06-603**	TCA Right	43068-87401	c: 15	4	**111-06-610**	Tie Rod End	45046-87401	

O.E.M. names and numbers are used for reference purposes only Ashika assumes no responsibility for possible errors

ACCORD III (CA4 - CA5) **11/1985 - 12/1989**

1 111-04-401 5 103-04-403

5 103-04-403 1 111-04-401

3 26-04-491

UPPER

4 26-04-492

2 73-04-404

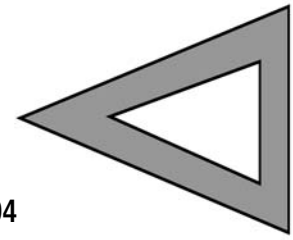

LOWER

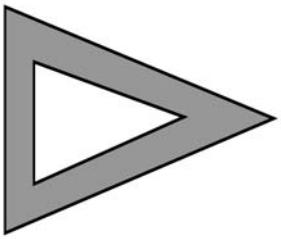

2 73-04-404

Ref.	ASHIKA CODE	Description	OEM	Measures	Ref.	ASHIKA CODE	Description	OEM	Measures
1	**111-04-401**	Tie Rod End Left	53540-611-010	c: 13 th: FM12X1.25R	4	**26-04-492**	TCA Upper Right	51459-SE0-000	c:12.9
2	**73-04-404**	Ball Joint Lower	51220 SE0 000	c:14.5	5	**103-04-403**	Axial Joint	53521-SA0-003	
3	**26-04-491**	TCA Upper Left	51469-SE0-000	c:12.9					

ACCORD IV (CB1-CB3-CB5-CB7) **01/1990 - 03/1993**

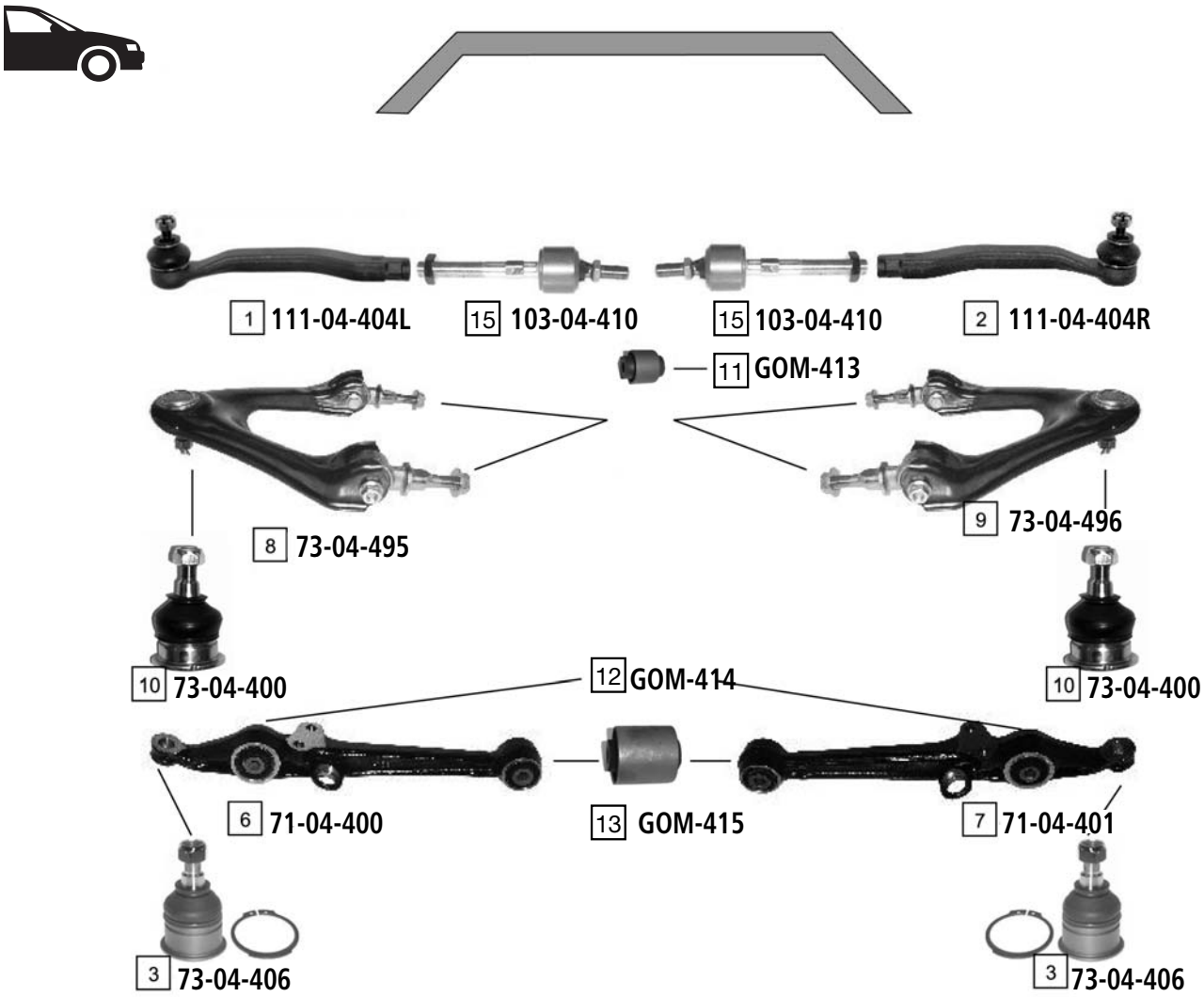

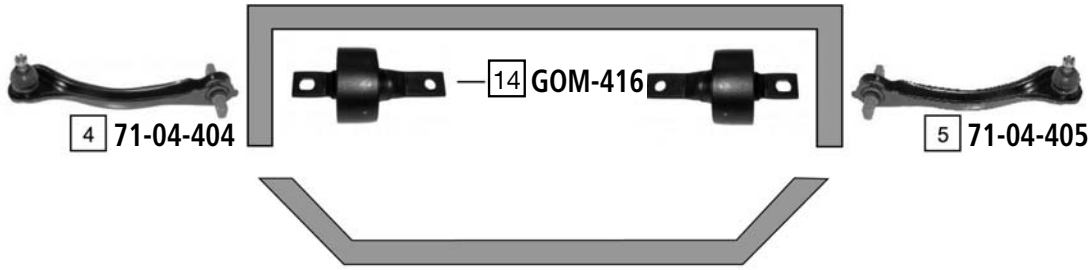

Ref.	ASHIKA CODE	Description	OEM	Measures	Ref.	ASHIKA CODE	Description	OEM	Measures
1	**111-04-404L**	Tie Rod End Left	53560-SM4-003	c:12.8 th:FM14X1.5R	9	**73-04-496**	TCA Right	51355 SM4 040	c:12.9
2	**111-04-404R**	Tie Rod End Right	53540-SM4-003	c:12.8 th:FM14X1.5R	10	**73-04-400**	Ball Joint	Part of 73-04-495 73-04-496	c:12.6
3	**73-04-406**	Ball Joint Lower	51220-SM4-013	c:16	11	**GOM-413**	Silentblock For Susp.Arm	52365-SM4-005	d: 34
4	**71-04-404**	TCA Left	52400 SM1 A03	c:12.7	12	**GOM-414**	Silentblock For Susp.Arm	51810-SM4-004	d: 42
5	**71-04-405**	TCA Right	53390 SM1 A03	c:12.7	13	**GOM-415**	Silentblock For Susp.Arm	51393-SM4-013	d: 35
6	**71-04-400**	TCA Left	51365-SM4-040		14	**GOM-416**	Silentblock For Susp.Arm	52370-SR3-J00	d: 80
7	**71-04-401**	TCA Right	51355-SM4-040		15	**103-04-410**	Axial Joint	53521-SM4-013	th:MM12X1.25R L:140
8	**73-04-495**	TCA Left	51460 SV4 000	c:12.9					

O.E.M. names and numbers are used for reference purposes only Ashika assumes no responsibility for possible errors

ACCORD VI (CE-CF) **02/1996 - 10/1998**

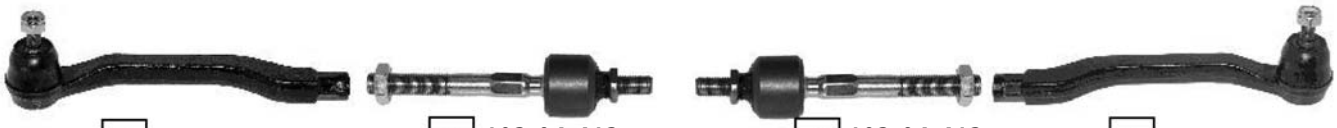

2 111-04-407L 1 103-04-413 1 103-04-413 3 111-04-407R

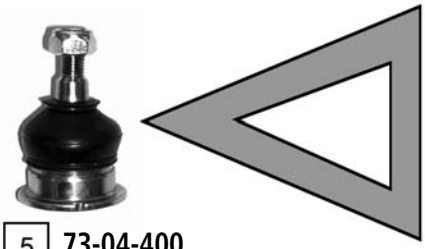

5 73-04-400

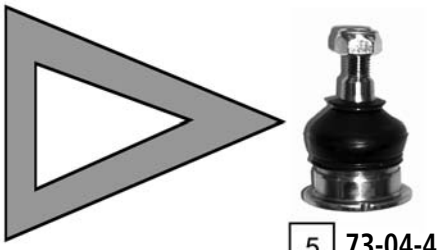

5 73-04-400

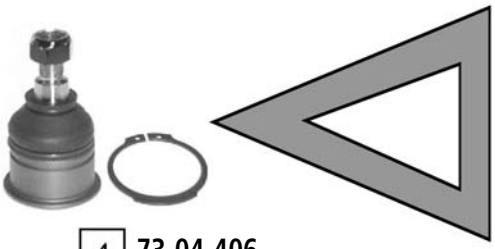

4 73-04-406

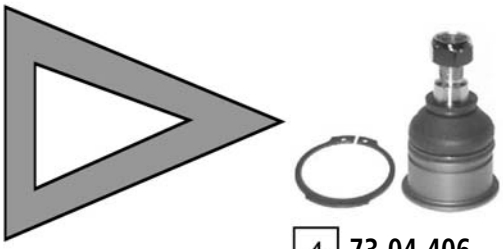

4 73-04-406

Ref.	ASHIKA CODE	Description	OEM	Measures	Ref.	ASHIKA CODE	Description	OEM	Measures
1	**103-04-413**	Axial Joint	53010-SV4-000	th:MM12X1.25R L:151	4	**73-04-406**	Ball Joint Lower	51220-SM4-013	c:16
2	**111-04-407L**	Tie Rod End Left	53560-SV4-003	c:12.6 th:FM14X1.5R	5	**73-04-400**	Ball Joint		c:12.6
3	**111-04-407R**	Tie Rod End Right	53540-SV4-003	c:12.6 th:FM14X1.5R					

ACCORD VII (CG) **02/1998 - 03/2002**

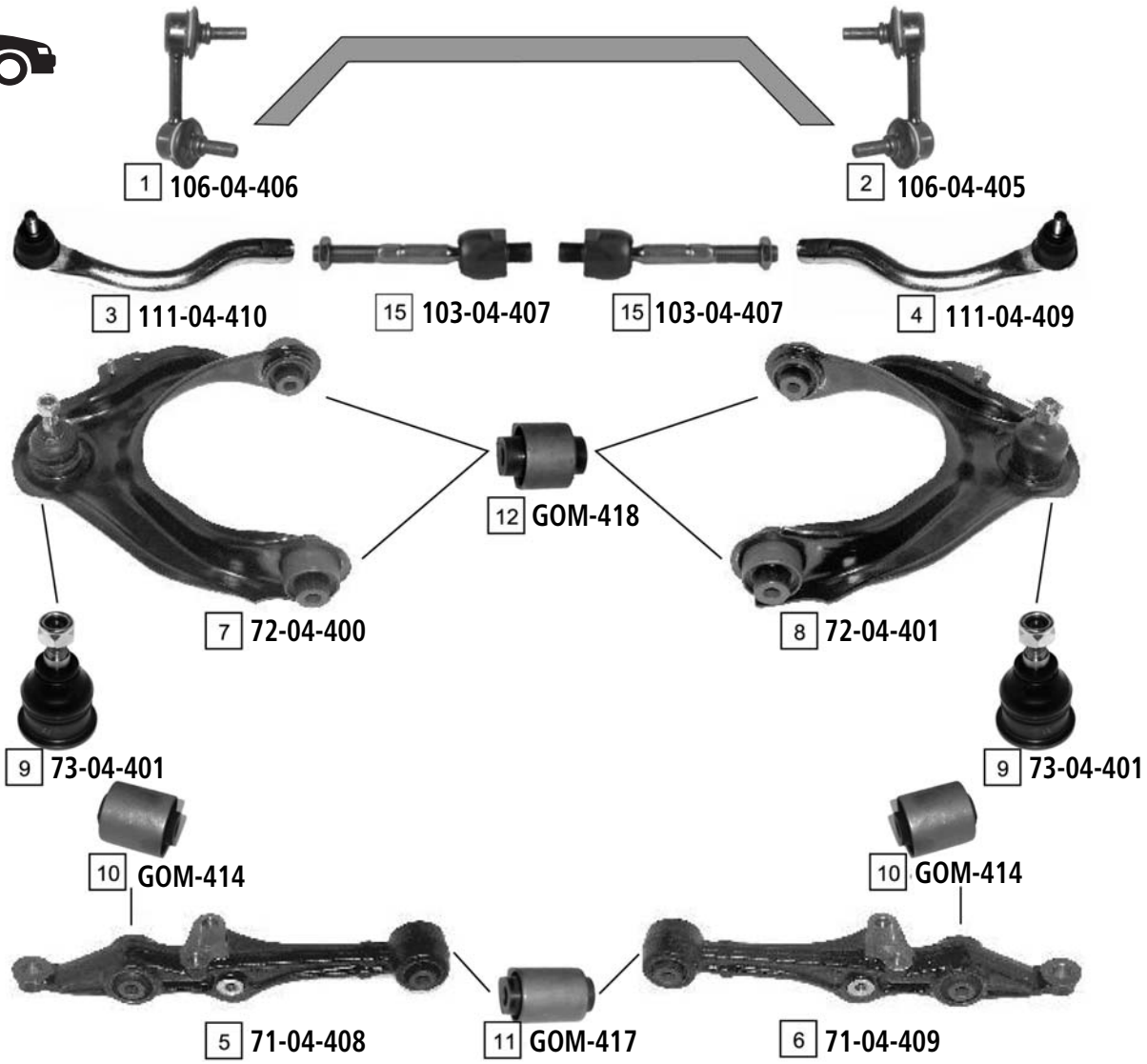

Ref.	ASHIKA CODE	Description	OEM	Measures	Ref.	ASHIKA CODE	Description	OEM	Measures
1	**106-04-406**	Stabiliser Link Left	51321-S84-A01	L:72	9	**73-04-401**	Ball Joint	Part of 72-04-400 72-04-401	c:12.7
2	**106-04-405**	Stabiliser Link Right	51320-S84-A01	L:72	10	**GOM-414**	Silentblock For Susp.Arm	51810-SM4-004	d:42
3	**111-04-410**	Tie Rod End Left	53560-S1A-E01	c:12.6 th:MM14X1.5R	11	**GOM-417**	Silentblock For Susp.Arm	51810-S1A-E00	
4	**111-04-409**	Tie Rod End Right	53540-S1A-E01	c:12.6 th:MM14X1.5R	12	**GOM-418**	Silentblock For Susp.Arm	51450-S1A-E01*	d:38.4
5	**71-04-408**	TCA Left	51365-S1A-E00	c:15.5	13	**106-04-408**	Stabiliser Link Left	52325 S84 A01	L:113
6	**71-04-409**	TCA Right	51355-S1A-E00	c:15.5	14	**106-04-407**	Stabiliser Link Right	52320 S84 A01	L:113
7	**72-04-400**	TCA Left	51460 S1A E01	c:12.7	15	**103-04-407**	Axial Joint	53010 S84 A01	th:MM16X1.5R L:142
8	**72-04-401**	TCA Right	51450-S1A-E01	c:12.7					

O.E.M. names and numbers are used for reference purposes only Ashika assumes no responsibility for possible errors

ACCORD VIII (CL - CM) 02/2003 ->

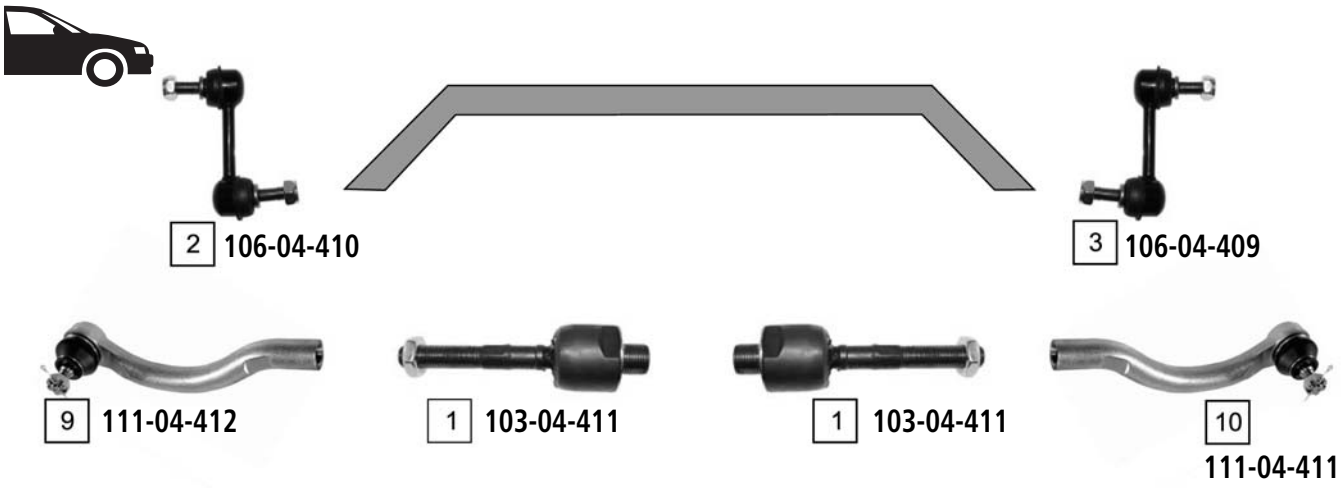

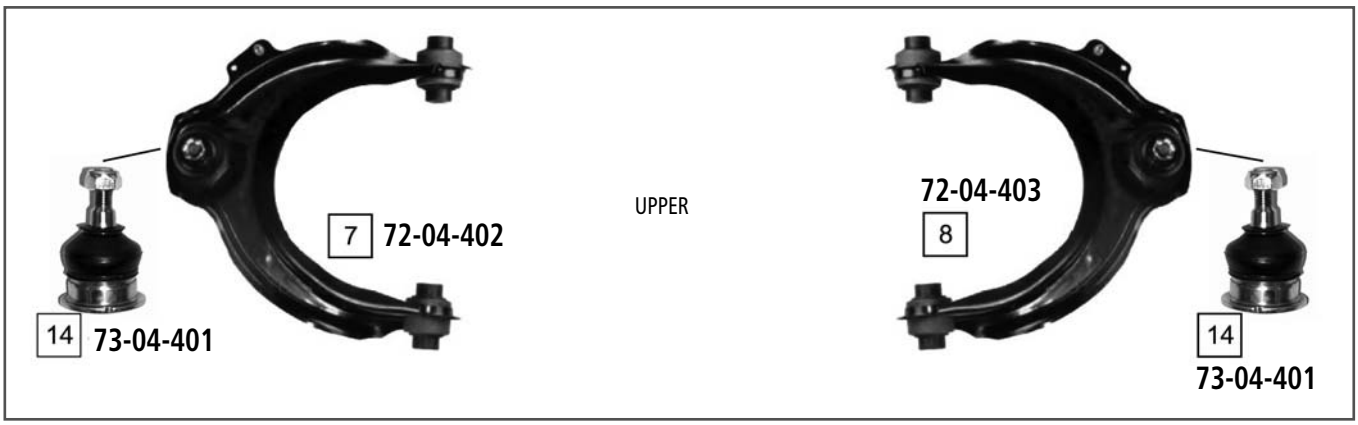

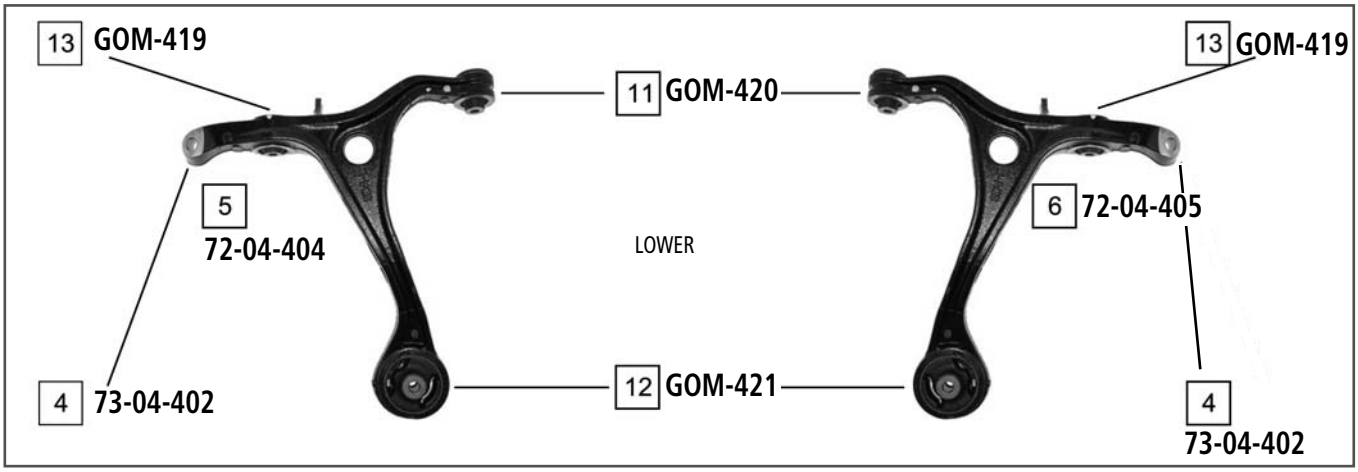

Ref.	ASHIKA CODE	Description	OEM	Measures	Ref	ASHIKA CODE	Description	OEM	Measures
1	103-04-411	Axial Joint	53010 SDA A01	th:MM18X1.5R L:123	8	72-04-403	TCA Right	51450 SDA A01	
2	106-04-410	Stabiliser Link Left	51321 SEA E01	L:80.5	9	111-04-412	Tie Rod End Left	53560 SDA A01	
3	106-04-409	Stabiliser Link Right	51320 SEA E01	L:80.5	10	111-04-411	Tie Rod End Right	53540 SDA A01	
4	73-04-402	Ball Joint	Part of 72-04-404 / 72-04-405		11	GOM-420	Silentblock For Susp.Arm	51391 SEA 004	
5	73-04-404	TCA Left	51360 SEA E01		12	GOM-421	Silentblock For Susp.Arm	51393 SEA 004	
6	72-04-405	TCA Right	51350 SEA E01		13	GOM-419	Silentblock For Susp.Arm	51810 SDA A01	
7	72-04-402	TCA Left	51460 SDA A01		14	73-04-401	TCA Right	51355 SM4 040	c:12.9

ACCORD COUPE (CD7-CD9) **09/1993 - 02/1998**

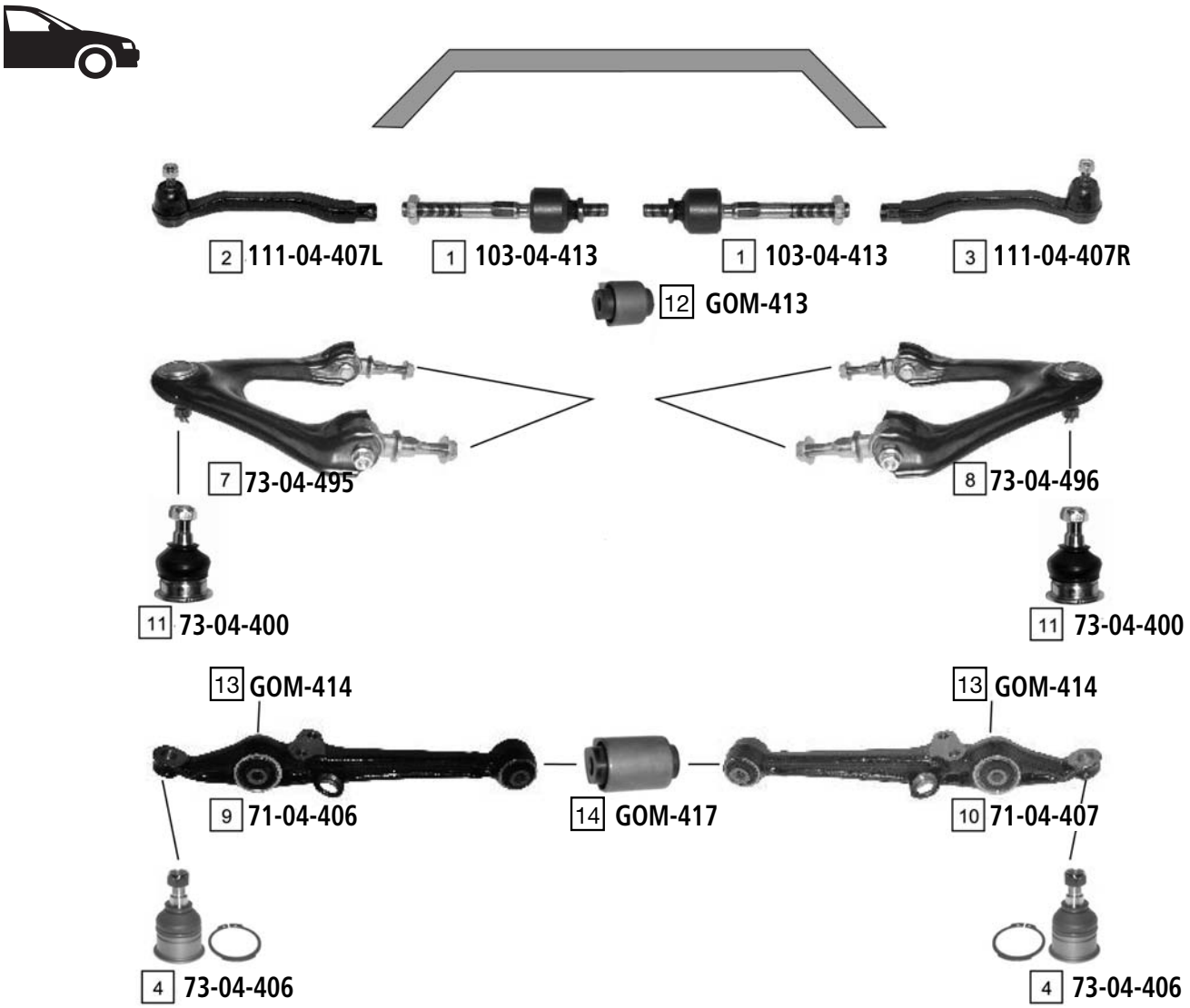

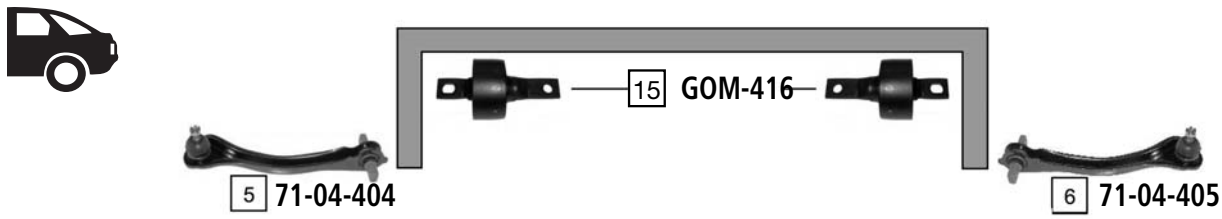

Ref.	ASHIKA CODE	Description	OEM	Measures	Ref	ASHIKA CODE	Description	OEM	Measures
1	**103-04-413**	Axial Joint	53010-SV4-000	th:MM12X1.25R L:151	9	**71-04-406**	TCA Left	51365-SV7-A00	c:15.5
2	**111-04-407L**	Tie Rod End Left	53560-SV4-003	c:12.6 th:MM14X1.5R	10	**71-04-407**	TCA Right	51355-SV7-A00	c:15.5
3	**111-04-407R**	Tie Rod End Right	53540-SV4-003	c:12.6 th:MM14X1.5R	11	**73-04-400**	Ball Joint	Part of 73-04-495/73-04-496	c:12.6
4	**73-04-406**	Ball Joint Lower	51220-SM4-013	c:16	12	**GOM-413**	Silentblock For Susp.Arm	52365-SM4-005	d:34
5	**71-04-404**	TCA Left	52400 SM1 A03	c:12.7	13	**GOM-414**	Silentblock For Susp.Arm	51810-SM4-004	d:42
6	**71-04-405**	TCA Right	52390 SM1 A03	c:12.7	14	**GOM-417**	Silentblock For Susp.Arm	51355-S1A-E00	
7	**73-04-495**	TCA Left	51460 SV4 000	c:12.9	15	**GOM-416**	Silentblock For Susp.Arm	52370-SR3-J00	d:80
8	**73-04-496**	TCA Right	51355 SM4 040	c:12.9					

O.E.M. names and numbers are used for reference purposes only Ashika assumes no responsibility for possible errors

CIVIC II **09/1983 - 11/1987**

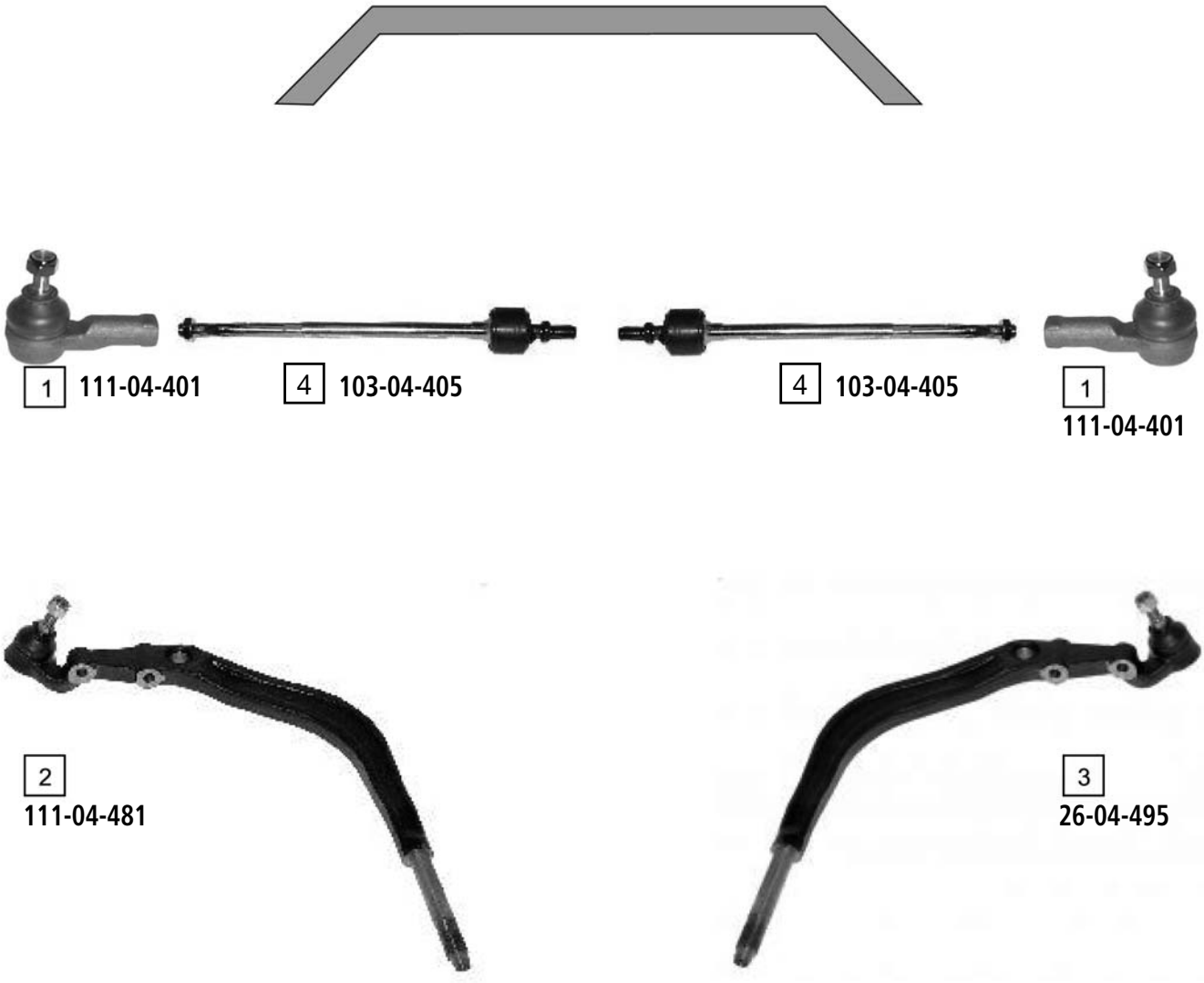

Ref.	ASHIKA CODE	Description	OEM	Measures	Ref.	ASHIKA CODE	Description	OEM	Measures
1	**111-04-401**	Tie Rod End	53540-611-010	c:13 th:FM12X1.25R	3	**26-04-495**	TCA Right	51351 SB2 013	c:14.5
2	**111-04-481**	TCA Left	51361-SB2-013	c:14.5	4	**103-04-405**	Axial Joint	53521-SB2-003	th:MM12X1.25R L:278

CIVIC III (EC-ED-EE) **09/1987 - 07/1991**

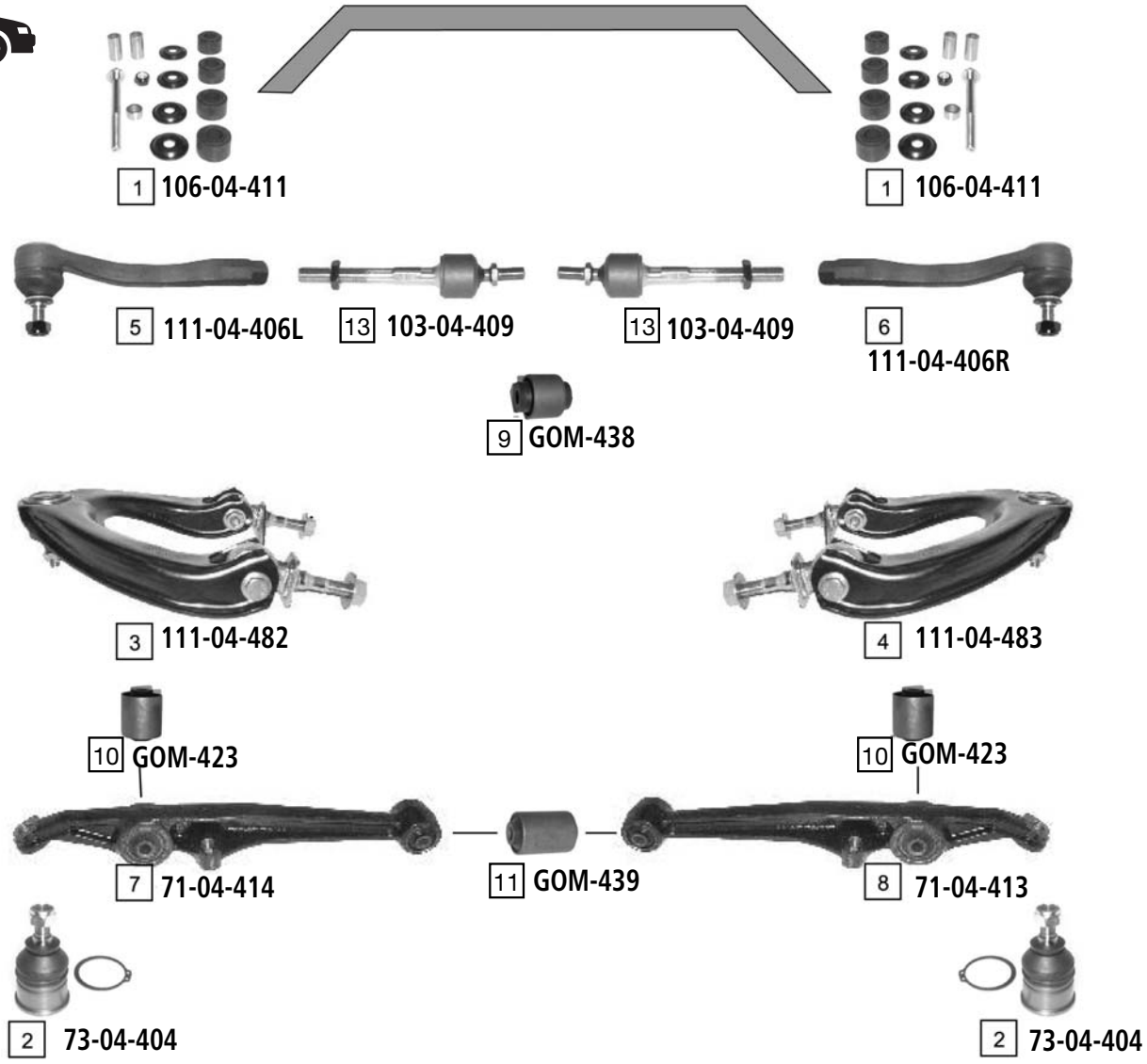

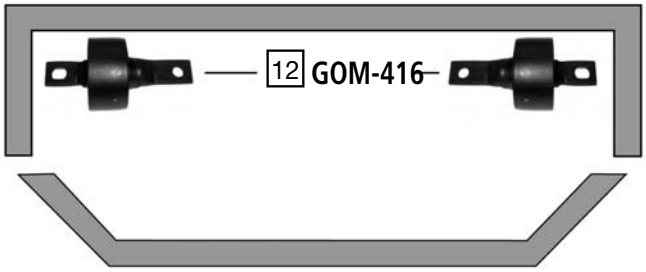

Ref.	ASHIKA CODE	Description	OEM	Measures	Ref.	ASHIKA CODE	Description	OEM	Measures
1	**106-04-411**	Stabiliser Link	90112 SE0 000	L:100	8	**71-04-413**	TCA Right	51355-SH3-020	
2	**73-04-404**	Ball Joint Lower	51220 SE0 000	c: 14.5	9	**GOM-438**	Silentblock For Susp.Arm	51450-SH3-023	d:29
3	**111-04-482**	TCA Upper Left	51460-SH3-000	c: 12.9	10	**GOM-423**	Silentblock For Susp.Arm	51350-SR3-A02	d:40
4	**111-04-483**	TCA Upper Right	51450 SH3 020	c: 12.9	11	**GOM-439**	Silentblock For Susp.Arm	51355-SH3-020	d:32.1
5	**111-04-406L**	Tie Rod End	53560-SH3-003	c:12.9 th:FM14X1.5R	12	**GOM-416**	Silentblock For Susp.Arm	52370-SR3-J00	d:80
6	**111-04-406R**	Tie Rod End	53540-SH3-003	c:12.9 th:FM14X1.5R	13	**103-04-409**	Axial Joint	53521-SH3-003	th:MM12x1,25R L:160
7	**71-04-414**	TCA Left	51365-SH3-020						

O.E.M. names and numbers are used for reference purposes only Ashika assumes no responsibility for possible errors

CIVIC IV (MA-MB-EG-EH-EJ) **08/1991 - 01/1997**

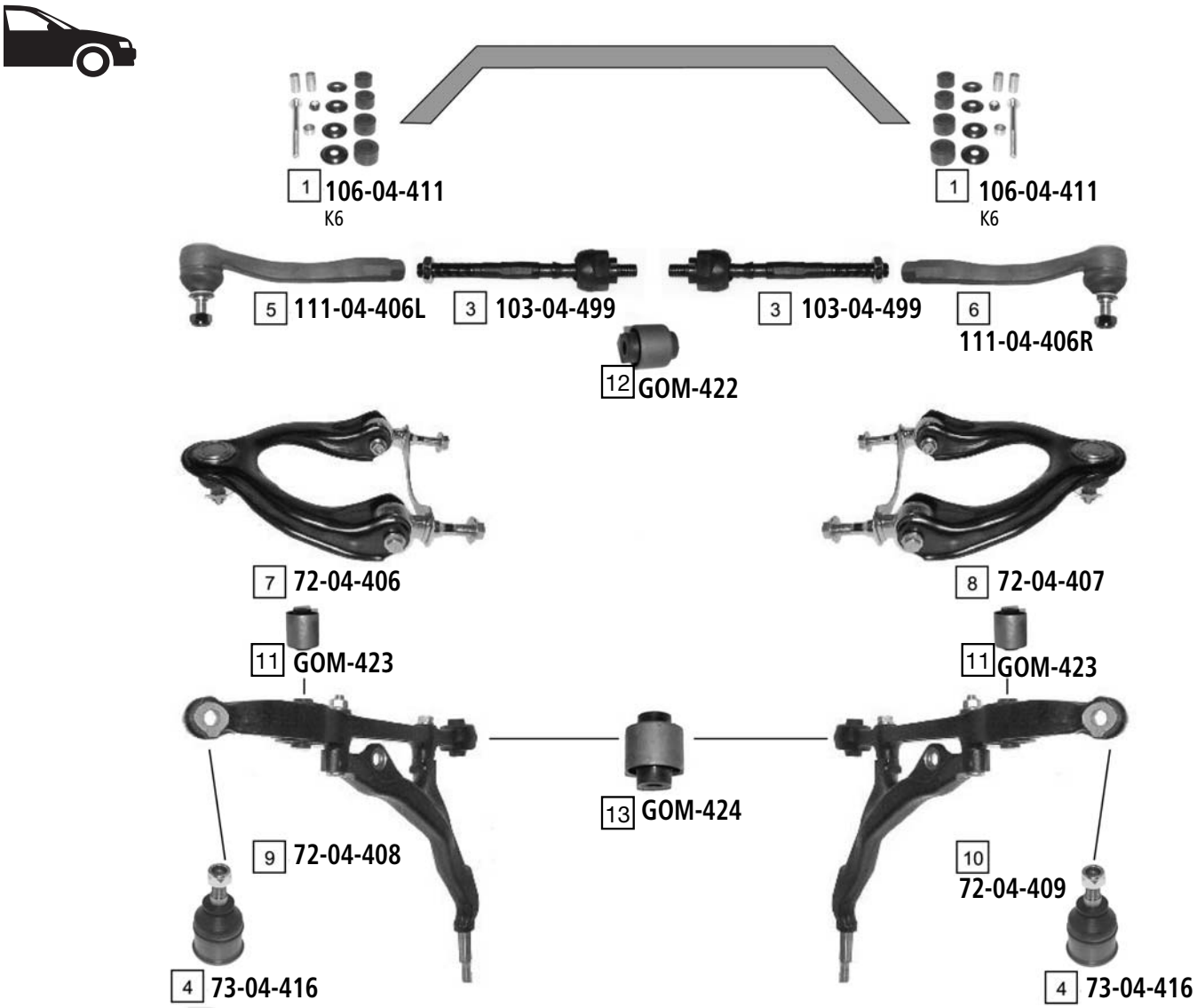

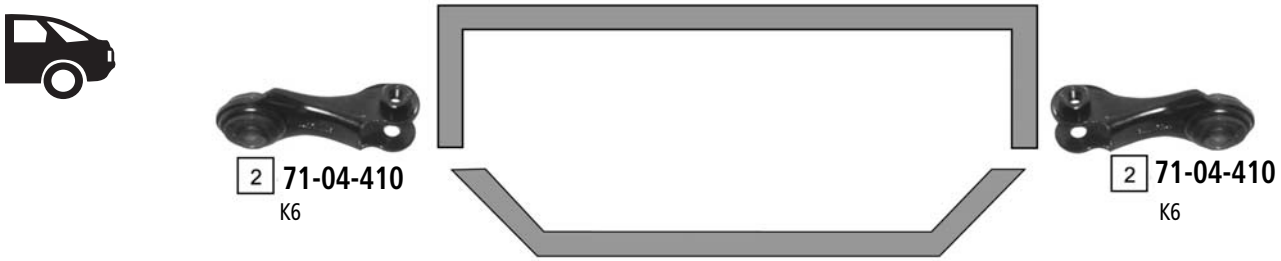

Ref	ASHIKA CODE	Description	OEM	Measures	Ref	ASHIKA CODE	Description	OEM	Measures
1	106-04-411	Stabiliser Link	90112 SE0 000	L:100	8	72-04-407	TCA	51450-SR3-023	c:12.9
2	71-04-410	Stabiliser Link	51312-SR3-000	L:75	9	72-04-408	TCA Left	51360-SR3-020	c:13.4
3	103-04-499	Axial Joint	53010-SR3-010	th:MM12X1.25R L:175	10	72-04-409	TCA Right	51350-SR3-020	
4	73-04-416	Ball Joint	51220 S04 003	c:14	12	GOM-423	Silentblock For Susp.Arm	51350-SR3-A02	d:40
5	111-04-406L	Tie Rod End Left	53560-S04-003	c:12.9 th:FM14x1.5R	13	GOM-422	Silentblock For Susp.Arm	51450-SR3-023	d:34
6	111-04-406R	Tie Rod End Right	53540-S04-003	c:12.9 th:FM14x1.5R	15	GOM-424	Silentblock For Susp.Arm	51360-SR3-A02	d:37
7	72-04-406	TCA	51460-SR3-023	c:12.9					

CIVIC V (EJ9-EK1-EK3-EK4-MB-MC) **11/1995 - 02/2001**

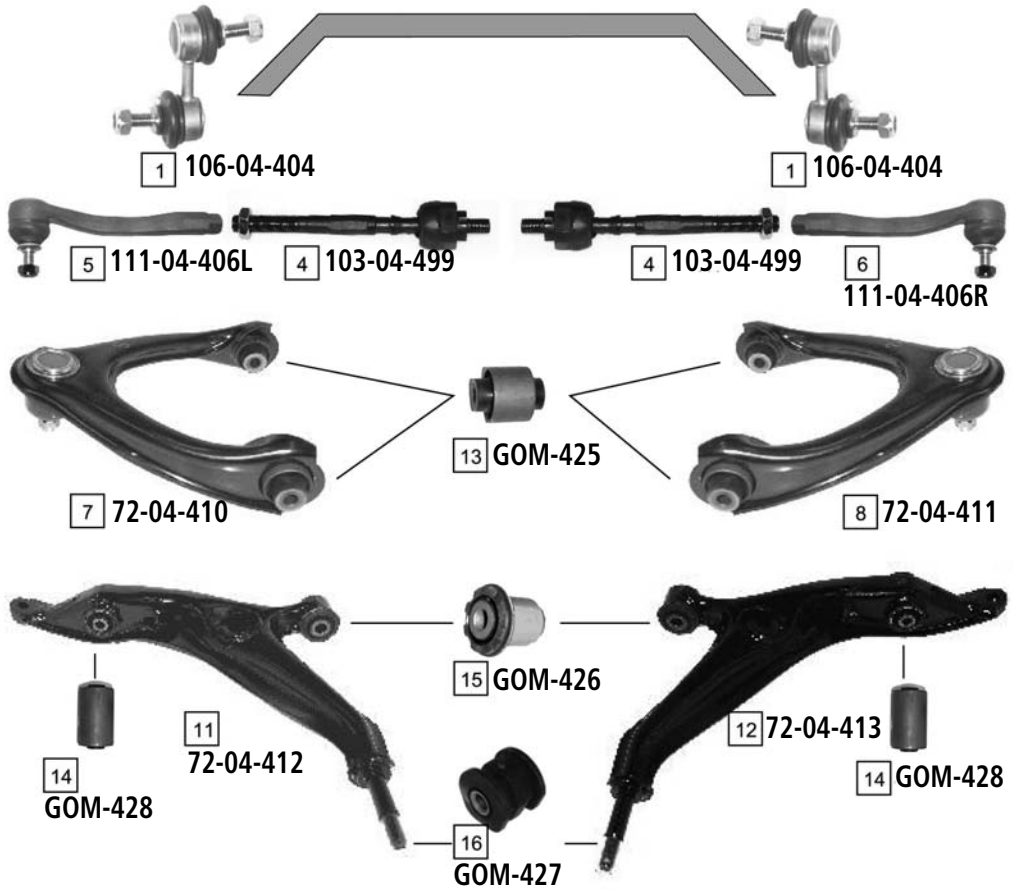

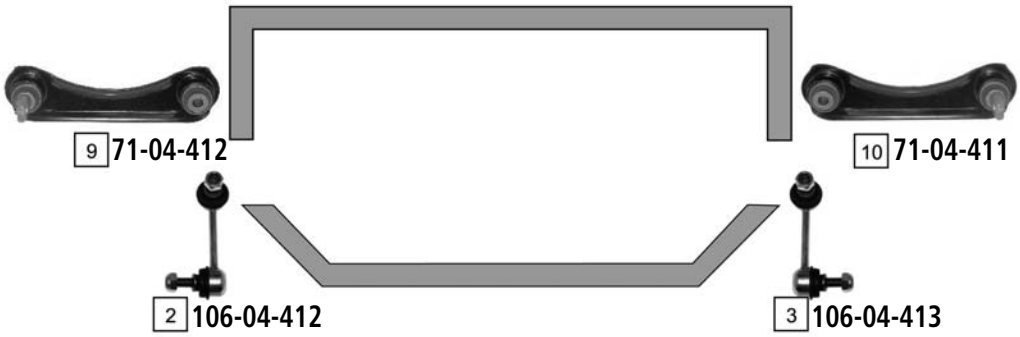

Ref	ASHIKA CODE	Description	OEM	Measures	Ref	ASHIKA CODE	Description	OEM	Measures
1	**106-04-404**	Stabiliser Link	51320-S04-003		9	**71-04-412**	TCA Left	52390-SR3-000	
2	**106-04-412**	Stabiliser Link Left	52321-S04-003	L:90	10	**71-04-411**	TCA Right	51460-SZ3-013	
3	**106-04-413**	Stabiliser Link Right	52320-S04-003	L:90	11	**72-04-412**	TCA Left	51360 S04 G00	c:14
4	**103-04-499**	Axial Joint	53010-SR3-010	th:MM12X1.25R L:175	12	**72-04-413**	TCA Right	51350 S04 000	c:13.5
5	**111-04-406L**	Tie Rod End Left	53560-S04-003	c:12.9 th:FM14X1.5R	13	**GOM-425**	Silentblock For Susp.Arm	51450-S04-023	d:34
6	**111-04-406R**	Tie Rod End Right	53540-S04-003	c:12.9 th:FM14X1.5R	14	**GOM-428**	Silentblock For Susp.Arm	Part of 72-04-412 / 72-04-413	d:40.1
7	**72-04-410**	TCA Left	51450-S01-023	c:12.8	15	**GOM-426**	Silentblock For Susp.Arm	51350-S04-000	d:37
8	**72-04-411**	TCA Right	52400-SR3-000	c:12.8	16	**GOM-427**	Silentblock For Susp.Arm	51391 S04 005	

O.E.M. names and numbers are used for reference purposes only Ashika assumes no responsibility for possible errors

CIVIC VI (EU-EP-EM) 02/2001 - 12/2005

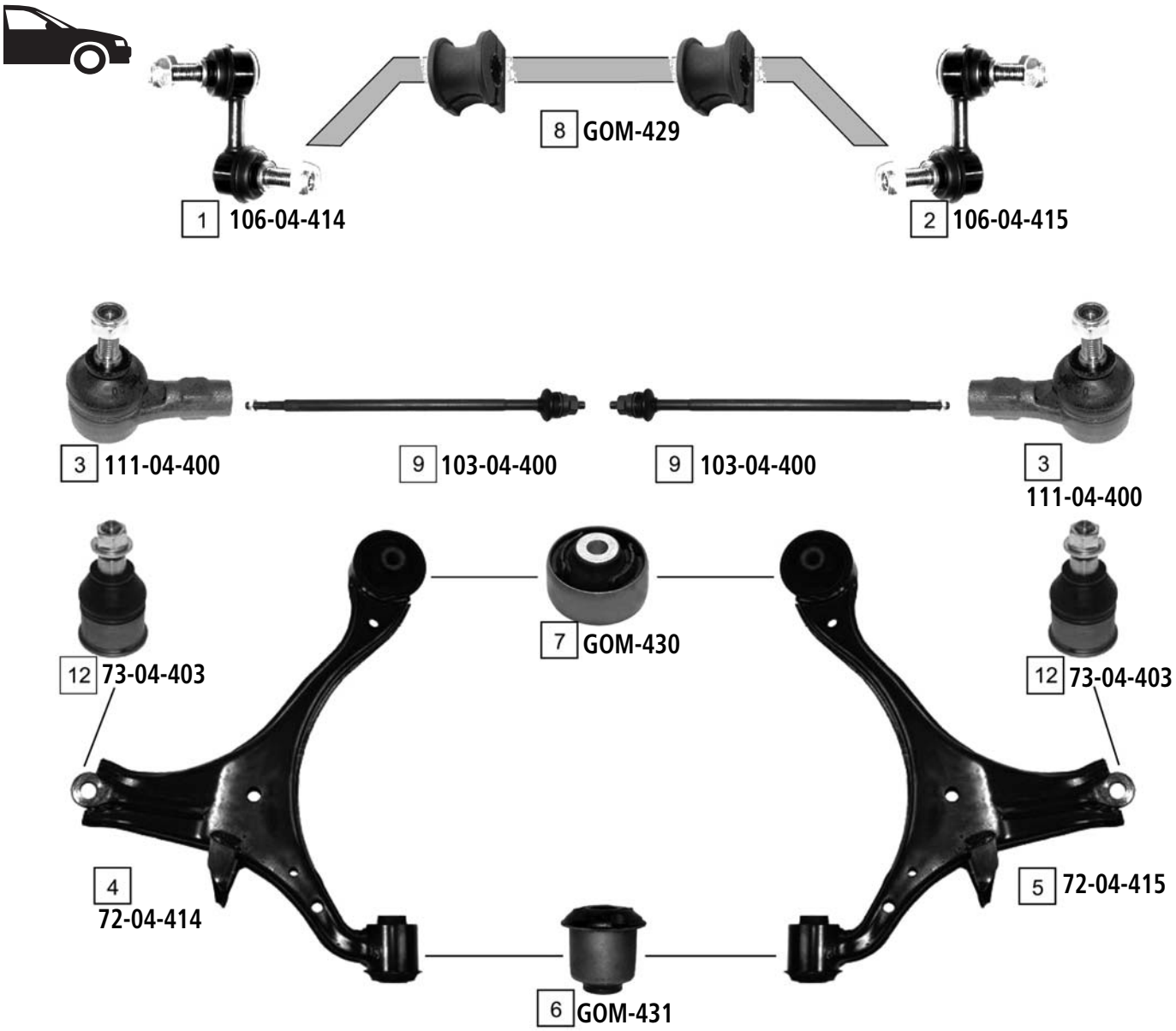

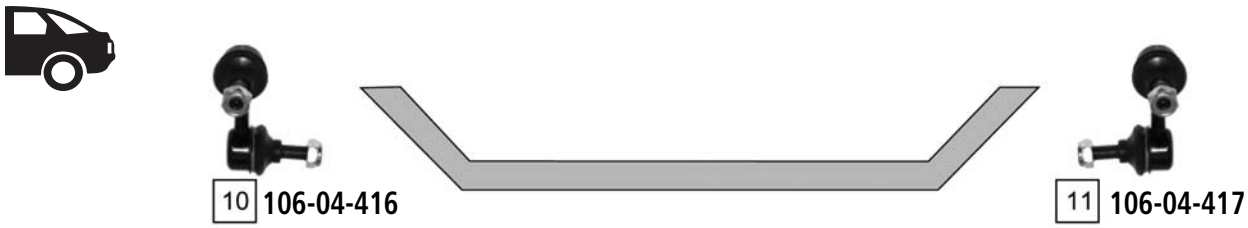

Ref.	ASHIKA CODE	Description	OEM	Measures	Ref	ASHIKA CODE	Description	OEM	Measures
1	106-04-414	Stabiliser Link Left	51321-S5A-003	L:55.5	7	GOM-430	Silentblock For Susp.Arm	51391 S5A 024	d:65
2	106-04-415	Stabiliser Link Right	51320-S5A-003	L:55	8	GOM-429	Stabiliser Mounting	51306-S6D-005	d:24.8
3	111-04-400	Tie Rod End	53541-S5A-003	c:12.7 th:FM14x1.5R	9	103-04-400	Axial Joint	53521 S5A 003	th:MM14X1.25R L:502
4	72-04-414	Tca Left Wobj	51360-S6D-G00	c:15.5	10	106-04-416	Stabiliser Link Left	52321 S5A 013	L:72.5
5	72-04-415	Tca Right Wobj	51350-S6D-G00	c:15.5	11	106-04-417	Stabiliser Link Right	52320 S5A 013	
6	GOM-431	Silentblock For Susp.Arm	51392-S5A-004	d:42.2	12	73-04-403	Ball Joint	51220 S5A 003	-

CIVIC VII **01/2006->**

1.4 -1.8

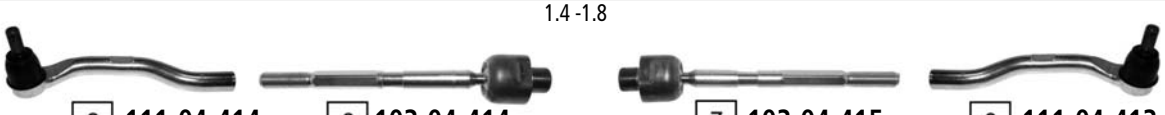

2.2 D

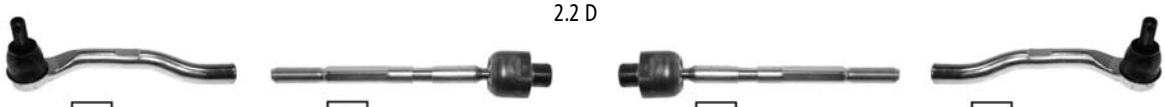

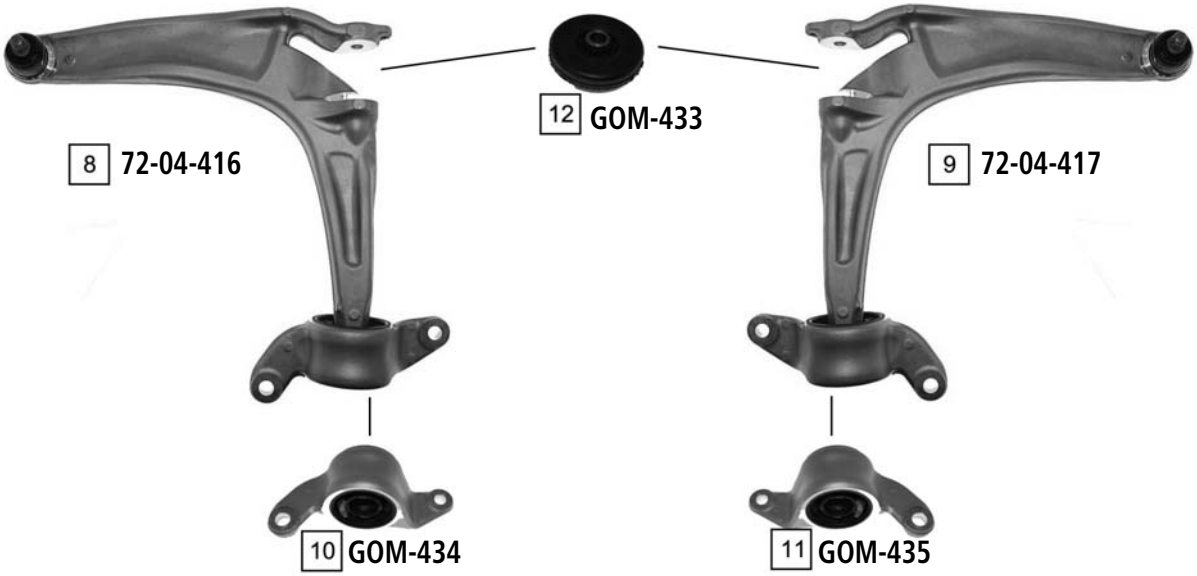

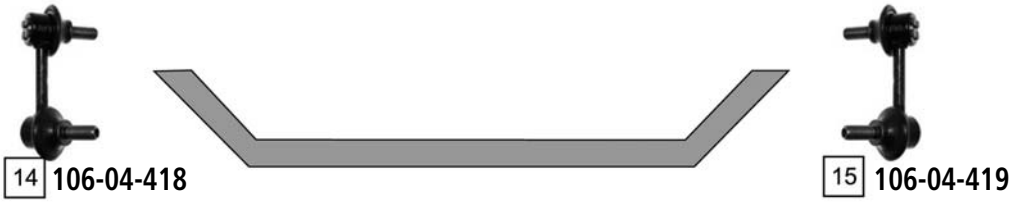

Ref	ASHIKA CODE	Description	OEM	Measures	Ref	ASHIKA CODE	Description	OEM	Measures
1	106-04-400	Stabiliser Link	51320 SMG E01		9	72-04-417	TCA Right Wbj	51350 SMG E05	
2	111-04-414	Tie Rod End Left	53560 SMG 003		10	GOM-434	Silentblock For Susp.Arm	51396 SMG E03	
3	111-04-413	Tie Rod End Right	53540 SMG 003		11	GOM-435	Silentblock For Susp.Arm	51395 SMG E03	
4	111-04-416	Tie Rod End Left	53560 SMJ 003		12	GOM-433	Silentblock For Susp.Arm	51398 SMG E01	
5	111-04-415	Tie Rod End Right	53540 SMJ 003		13	GOM-432	Stabiliser Mounting	51306 SMG E02	
6	103-04-414	Axial Joint	53010 SMG E01		14	106-04-418	Stabiliser Link Left	52321 SNA A01	
7	103-04-415	Axial Joint	53011 SMG E01		15	106-04-419	Stabiliser Link Right	52320 SNA A01	
8	72-04-416	TCA Left Wbj	51360 SMG E05						

O.E.M. names and numbers are used for reference purposes only Ashika assumes no responsibility for possible errors

CONCERTO (HW) **08/1989 - 10/1996**

1 **111-04-487**

1 **111-04-487**

2 **111-04-488**

3 **111-04-489**

Ref.	ASHIKA CODE	Description	OEM	Measures	Ref	ASHIKA CODE	Description	OEM	Measures
1	111-04-487	Tie Rod End	GSJ 1011	c:12.9 th:FM14X1.5R	3	111-04-489	TCA Right	GSJ 1086	c:15
2	111-04-488	TCA Left	GSJ 1085	c:15					

CR-V I (RD) **10/1995 - 06/2002**

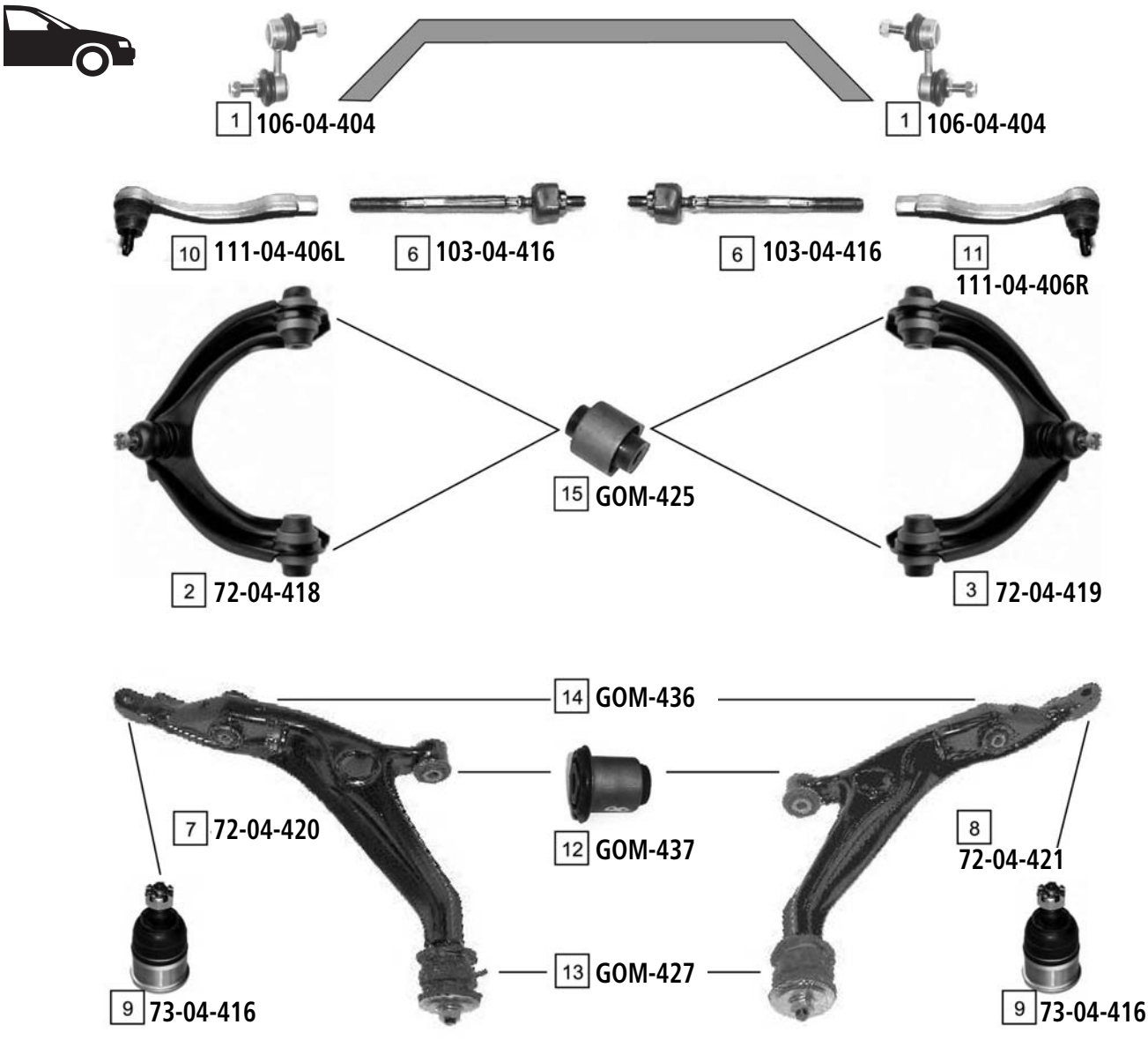

Ref	ASHIKA CODE	Description	OEM	Measures	Ref	ASHIKA CODE	Description	OEM	Measures
1	**106-04-404**	Stabiliser Link	51320-S04-003		9	**73-04-416**	Ball Joint	51220-S04-003	
2	**72-04-418**	TCA Left	51460-S10-020	c:12.7	10	**111-04-406L**	Tie Rod End Left	53560-S04-003	c:12.7 th:FM14X1.5R
3	**72-04-419**	TCA Right	51450-S10-020	c:12.7	11	**111-04-406R**	Tie Rod End Right	53540-S04-003	c:12.7 th:FM14X1.5R
4	**106-04-420**	Stabiliser Link Left	52321 S10 003	L:125	12	**GOM-437**	Silentblock For Susp.Arm	Part of 72-04-420 / 72-04-421	
5	**106-04-421**	Stabiliser Link Right	53320 S10 003	L:125	13	**GOM-427**	Silentblock For Susp.Arm	51391 S04 005	
6	**103-04-416**	Axial Joint	53010-S10-000	th:MM12X1.25R L:202	14	**GOM-436**	Silentblock For Susp.Arm	Part of 72-04-420 / 72-04-421	
7	**72-04-420**	TCA Left	51360-S10-G00		15	**GOM-425**	Silentblock For Susp.Arm	51450-S04-023	d:34
8	**72-04-421**	TCA Right	51350-S10-G00						

O.E.M. names and numbers are used for reference purposes only Ashika assumes no responsibility for possible errors

CR-V II 07/2002 - 09/2006

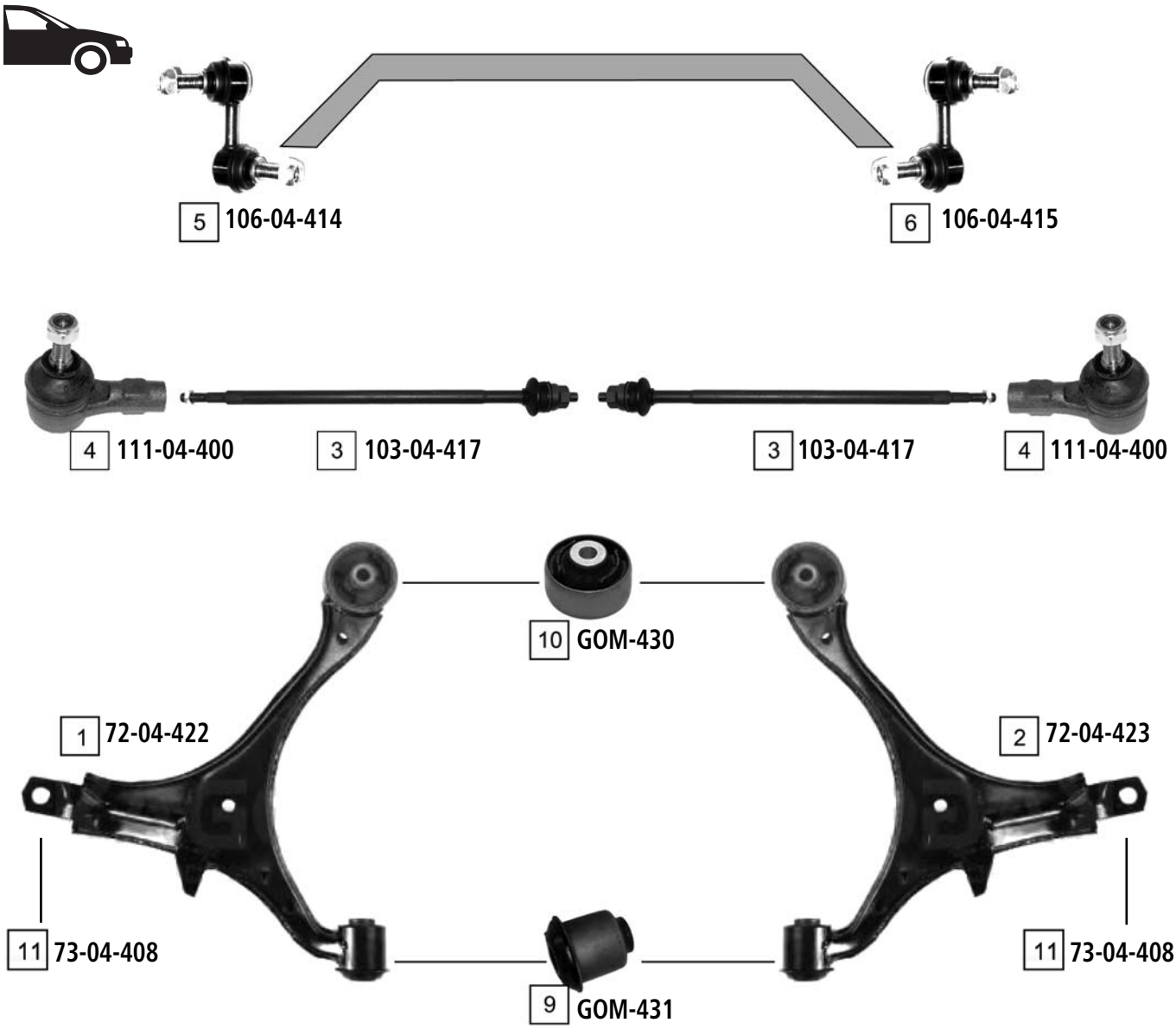

Ref.	ASHIKA CODE	Description	OEM	Measures	Ref	ASHIKA CODE	Description	OEM	Measures
1	72-04-422	TCA Left	51360 S9A 010	c:15	7	106-04-422	Stabiliser Link Left	52321 S9A 003	L:89.5
2	72-04-423	TCA Right	51350 S9A 010	c:15	8	106-04-423	Stabiliser Link Right	52320 S9A 003	L:89.5
3	103-04-417	Axial Joint	53521-S9A-003	th:MM14X1.25R L:547	9	GOM-431	Silentblock For Susp.Arm	51392-S5A-004	d :42.2
4	111-04-400	Tie Rod End	53541-S5A-003	c:12.7 th:FM14X1.5R	10	GOM-430	Silentblock For Susp.Arm	51391 S5A 024	d :65
5	106-04-414	Stabiliser Link Left	51321-S5A-003	L:55.5	11	73-04-408	Ball Joint		
6	106-04-415	Stabiliser Link Right	51320-S5A-003	L:55					

CRX I (AF-AS) **07/1983 - 09/1987**

1 **111-04-401** 4 **103-04-405** 4 **103-04-405** 1 **111-04-401**

2 **111-04-481**

3 **26-04-495**

Ref	ASHIKA CODE	Description	OEM	Measures	Ref	ASHIKA CODE	Description	OEM	Measures
1	**111-04-401**	Tie Rod End	53450-611-010	c:13 th:FM12X1.25R	3	**26-04-495**	TCA Right	51351 SB2 013	c:14.5
2	**111-04-481**	TCA Left	51361-SB2-013	c:14.5	4	**103-04-405**	Axial Joint	53521-SB2-003	th:MM12X1.25R L:278

O.E.M. names and numbers are used for reference purposes only Ashika assumes no responsibility for possible errors

CRX II (ED-EE) 09/1987 - 02/1992

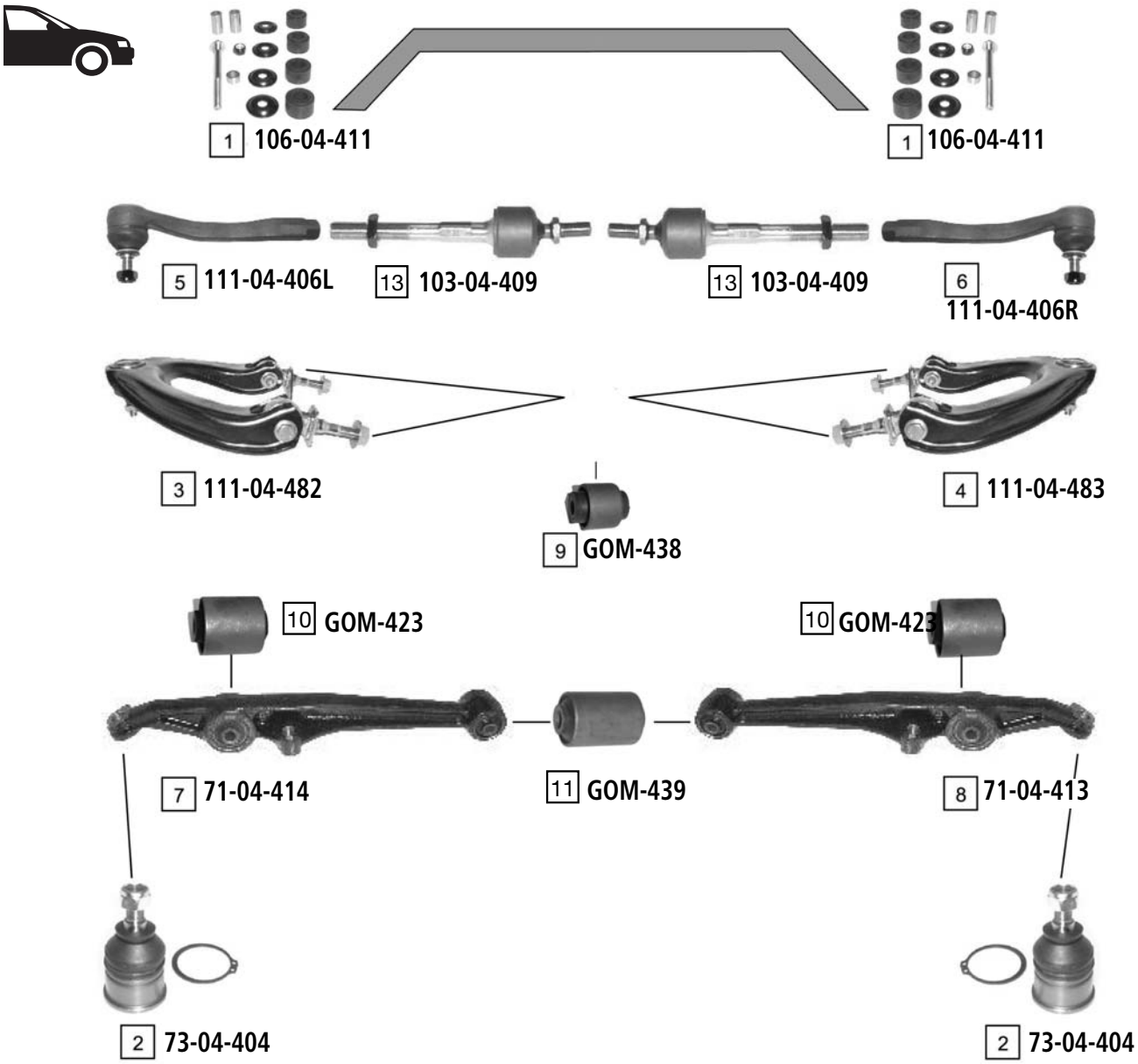

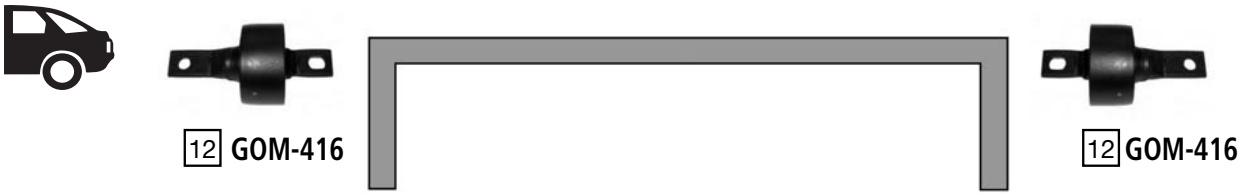

Ref.	ASHIKA CODE	Description	OEM	Measures	Ref	ASHIKA CODE	Description	OEM	Measures
1	106-04-411	Stabiliser Link	90112 SE0 000	L:100	8	71-04-413	TCA Right	51355-SH3-020	
2	73-04-404	Ball Joint Lower	51220 SE0 000	c:14.5	9	GOM-438	Silentblock For Susp.Arm	51450-SH3-023	d:29
3	111-04-482	TCA Upper Left	51460-SH3-000	c:12.9	10	GOM-423	Silentblock For Susp.Arm	51350-SR3-A02	d:40
4	111-04-483	TCA Upper Right	51450 SH3 020	c:12.9	11	GOM-439	Silentblock For Susp.Arm	51355-SH3-020	d:32.1
5	111-04-406L	Tie Rod End	53560-SH3-003	c:12.9 th:FM14X1.5R	12	GOM-416	Silentblock For Susp.Arm	52370-SR3-J00	d:80
6	111-04-406R	Tie Rod End	53540-SH3-003	c:12.9 th:FM14X1.5R	13	103-04-409	Axial Joint	53521-SH3-003	th:MM12X1,25R L:160
7	71-04-414	TCA Left	51365-SH3-020						

HR-V (GH) **03/1999 - 07/2006**

1 106-04-424

2 106-04-425

6 111-04-417

3 103-04-418

3 103-04-418

6 111-04-417

4 72-04-424

5 72-04-425

Ref	ASHIKA CODE	Description	OEM	Measures	Ref	ASHIKA CODE	Description	OEM	Measures
1	**106-04-424**	Stabiliser Link Left	51321-S2H-003	L:148	4	**72-04-424**	TCA	51360-S2H-G01	c:16
2	**106-04-425**	Stabiliser Link Right	51320-S2H-003	L:148	5	**72-04-425**	TCA	51350-S2H-G01	c:16
3	**103-04-418**	Axial Joint	53010 S2H J01	th:MM14X1.5R L:307	6	**111-04-417**	Tie Rod End	53540-SX8-T01	c:13.5 th:FM12X1.25

O.E.M. names and numbers are used for reference purposes only Ashika assumes no responsibility for possible errors

INTEGRA (DA_) **10/1985 - 08/1989**

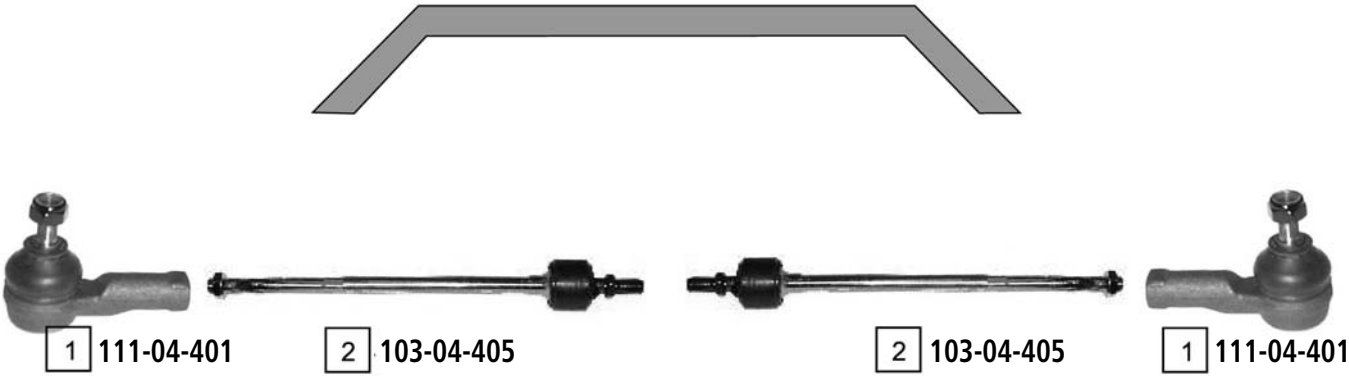

Ref.	ASHIKA CODE	Description	OEM	Measures	Ref	ASHIKA CODE	Description	OEM	Measures
1	**111-04-401**	Tie Rod End	53540-611-010	c:13 th: FM12X1.25R	2	**103-04-405**	Axial Joint	53521-SB2-003	th:MM12X1.25R L:278

JAZZ (AA) **10/1983 - 10/1986**

1 **111-04-401**

4 **103-04-405**

4 **103-04-405**

1 **111-04-401**

2 **111-04-481**

3 **26-04-495**

Ref	ASHIKA CODE	Description	OEM	Measures	Ref	ASHIKA CODE	Description	OEM	Measures
1	**111-04-401**	Tie Rod End	53540-611-010	c:13 th:FM12X1.25R	3	**26-04-495**	TCA Right	51351 SB2 013	c:14.5
2	**111-04-481**	TCA Left	51361-SB2-013	c:14.5	4	**103-04-405**	Axial Joint	53521-SB2-003	th: MM12X1.25R L:278

O.E.M. names and numbers are used for reference purposes only Ashika assumes no responsibility for possible errors

JAZZ (GD) 03/2002->

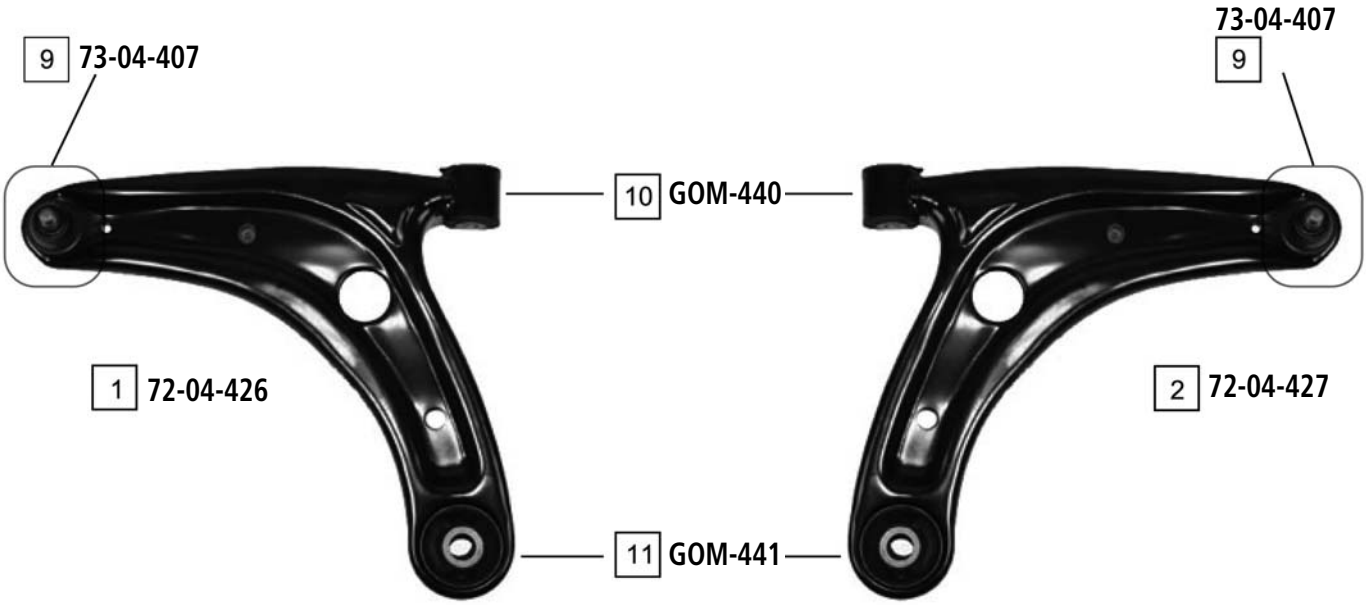

Ref.	ASHIKA CODE	Description	OEM	Measures	Ref	ASHIKA CODE	Description	OEM	Measures
1	**72-04-426**	TCA Left	51360 SAA E01		7	**111-04-418**	Tie Rod End Left	53560-SAA-003	c:12.6 th:FM12X1.25
2	**72-04-427**	TCA Right	51350 SAA E01		8	**111-04-419**	Tie Rod End Right	53540-SAA-003	c:12.6 th:FM12X1.25
3	**106-04-426**	Stabiliser Link Left	51321-SAA-003	L:300	9	**73-04-407**	Ball Joint	Part of 72-04-426 / 72-04-427	c:16
4	**106-04-427**	Stabiliser Link Right	51320-SAA-003		10	**GOM-440**	Silentblock For Susp.Arm	Part of 72-04-426 / 72-04-427	
5	**103-04-420**	Axial Joint	53011-SAA-J01	th:MM16X1R L:211	11	**GOM-441**	Silentblock For Susp.Arm	Part of 72-04-426 / 72-04-427	
6	**103-04-419**	Axial Joint	53010-SAA-J01	th:MM16X1R L:211					

LEGEND I (HS, KA) **01/1986 - 12/1990**

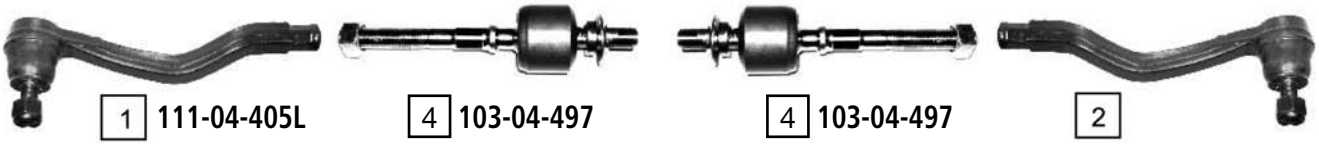

1 **111-04-405L**

4 **103-04-497**

4 **103-04-497**

2 **111-04-405R**

3 **73-04-499**

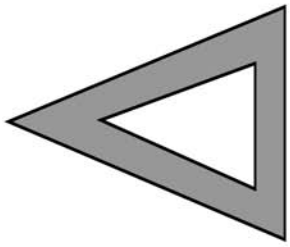

LOWER

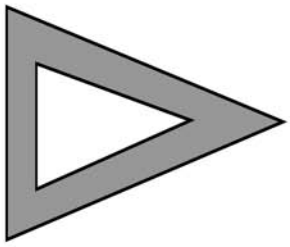

3 **73-04-499**

5 **111-04-484**

6 **111-04-485**

Ref	ASHIKA CODE	Description	OEM	Measures	Ref	ASHIKA CODE	Description	OEM	Measures
1	**111-04-405L**	Tie Rod End	53560-SD4-003	c:14 th:FM12X1.25R	4	**103-04-497**	Axial Joint	53521-SD4-003	th:MM12X1.25R L:136
2	**111-04-405R**	Tie Rod End	53540-SD4-003	c:14 th:FM12X1.25R	5	**111-04-484**	Tie Rod End		
3	**73-04-499**	Ball Joint Lower	51220-SD4-004	c:18	6	**111-04-485**	Tie Rod End		

O.E.M. names and numbers are used for reference purposes only Ashika assumes no responsibility for possible errors

LEGEND II (KA7) **01/1991 - 02/1996**

9 106-04-428 9 106-04-428

2 111-04-402L 1 103-04-495 1 103-04-495 3 111-04-402R

5 72-04-428 6 72-04-429

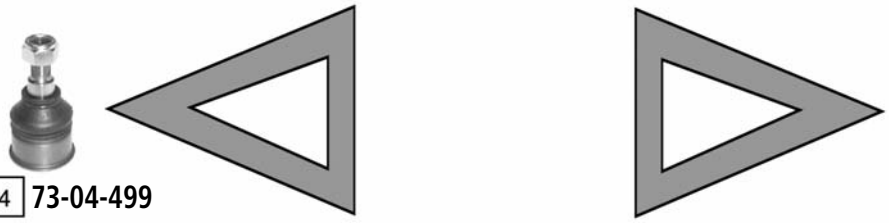

4 73-04-499 4 73-04-499

7 26-04-410L 8 26-04-410R

Ref.	ASHIKA CODE	Description	OEM	Measures	Ref	ASHIKA CODE	Description	OEM	Measures
1	**103-04-495**	Axial Joint	53521-SP0-004	th:MM16X1.25R L:126	6	**72-04-429**	TCA	51450-SP0-033	c:12.8
2	**111-04-402L**	Tie Rod End	53560-SP0-013		7	**26-04-410L**	TCA	52400-SP0-013	c:14
3	**111-04-402R**	Tie Rod End	53540-SP0-013		8	**26-04-410R**	TCA	51390-SP0-013	c:14
4	**73-04-499**	Ball Joint Lower	51220-SD4-004	c:18	9	**106-04-428**	Stabiliser Link	51320 SP0 003	L:78.5
5	**72-04-428**	TCA	51460-SP0-033	c:12.8					

LEGEND III (KA9) **02/1996->**

-> CHAS WC002641

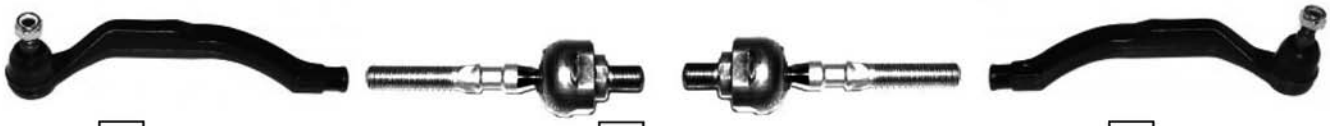

3 **111-04-420** 2 **103-04-421** 4 **111-04-421**

CHAS WC002642 ->

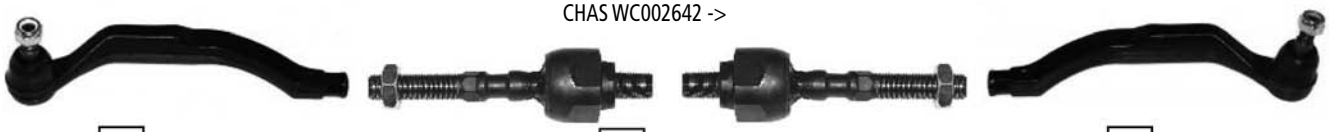

3 **111-04-420** 1 **103-04-422** 4 **111-04-421**

5 **72-04-430**

6 **72-04-431**

Ref	ASHIKA CODE	Description	OEM	Measures	Ref	ASHIKA CODE	Description	OEM	Measures
1	**103-04-422**	Axial Joint	53010-SW5-003	th:MM14X1.25R L:122	4	**111-04-421**	Tie Rod End	53540-SZ3-003	
2	**103-04-421**	Axial Joint	53010-SW5-000	th:MM14X1.25R L:122	5	**72-04-430**	TCA	51450-SZ3-013	c:12.8
3	**111-04-420**	Tie Rod End	53560-SZ3-003		6	**72-04-431**	TCA	51460-SZ3-901	c:12.8

O.E.M. names and numbers are used for reference purposes only Ashika assumes no responsibility for possible errors

LOGO (GA3) 03/1999 - 03/2002

1 106-04-430

2 106-04-429

6 111-04-417

3 103-04-423

3 103-04-423

6 111-04-417

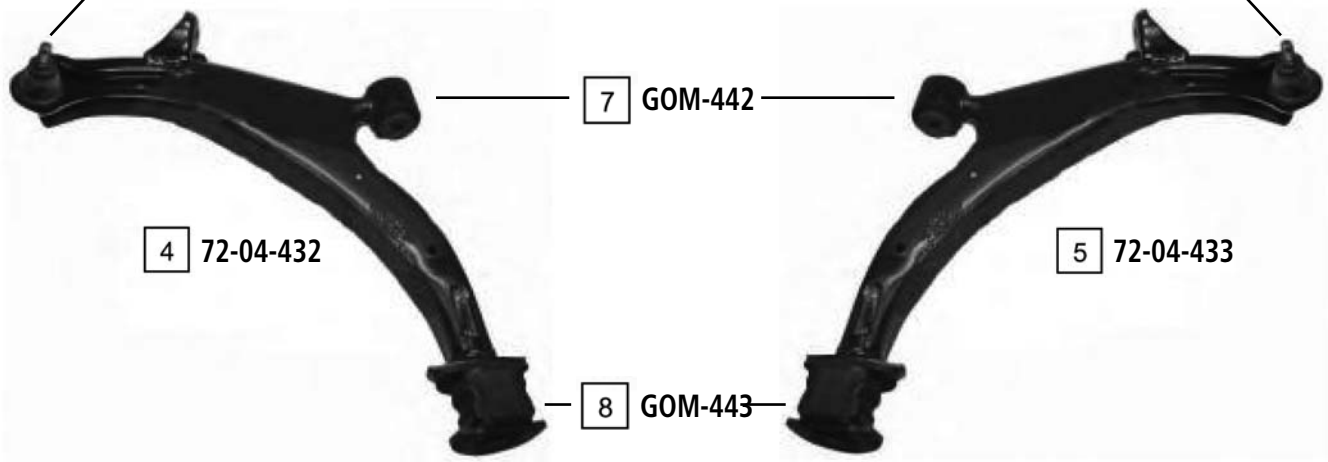

Ref.	ASHIKA CODE	Description	OEM	Measures	Ref	ASHIKA CODE	Description	OEM	Measures
1	**106-04-430**	Stabiliser Link Left	51321-S2G-003	L:55	6	**111-04-417**	Tie Rod End	53540-SX8-T01	c:13.5 th:FM12X1.25
2	**106-04-429**	Stabiliser Link Right	51320-S2G-003	L:55	7	**GOM-442**	Silentblock For Susp.Arm	Part of 72-04-432 / 72-04-433	
3	**103-04-423**	Axial Joint	53010-S50-003	th:MM14X1.5R L:300	8	**GOM-443**	Silentblock For Susp.Arm	Part of 72-04-432 / 72-04-433	
4	**72-04-432**	TCA Left	51360 S50 G01	c:14.5	9	**73-04-409**	Ball Joint	Part of 72-04-432 / 72-04-433	
5	**72-04-433**	TCA Right	51350 S50 G01						

PRELUDE I (SN) **11/1978 - 10/1982**

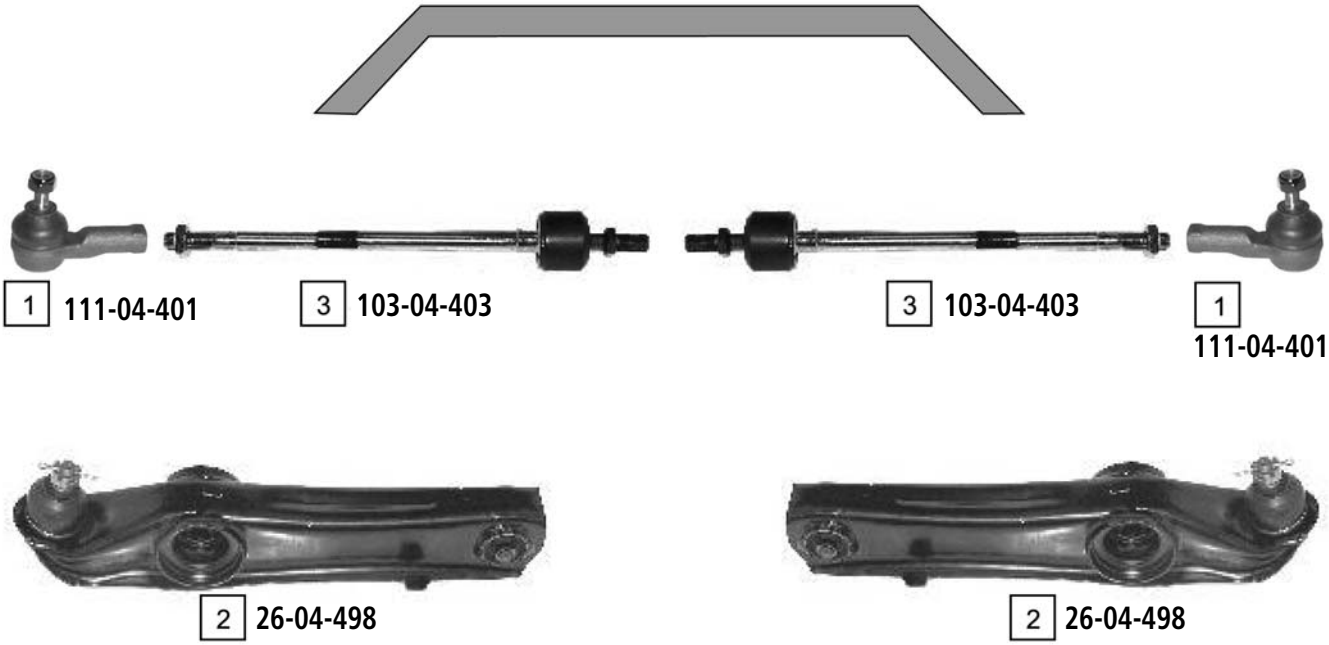

Ref	ASHIKA CODE	Description	OEM	Measures	Ref	ASHIKA CODE	Description	OEM	Measures
1	**111-04-401**	Tie Rod End	53540-611-010	c:13 th:FM12X1.25R	3	**103-04-403**	Axial Joint	53521-SA0-003	
2	**26-04-498**	TCA	51350-692-000	c:14.4					

O.E.M. names and numbers are used for reference purposes only Ashika assumes no responsibility for possible errors

PRELUDE II (AB) **11/1983 - 04/1987**

1 111-04-401 4 103-04-406 4 103-04-406 1 111-04-401

2 73-04-405 UPPER 2 73-04-405

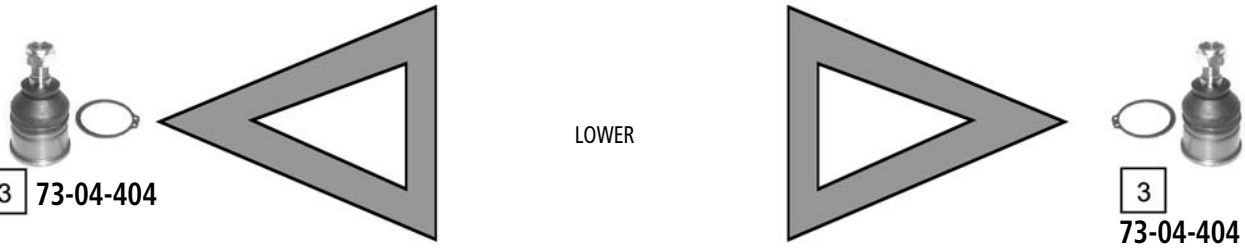

3 73-04-404 LOWER 3 73-04-404

Ref.	ASHIKA CODE	Description	OEM	Measures	Ref	ASHIKA CODE	Description	OEM	Measures
1	111-04-401	Tie Rod End	53540-611-010	c:13 th:FM12X1.25R	3	73-04-404	Ball Joint Lower	51220 SEO 000	c:14.5
2	73-04-405	Ball Joint	51270SB0003	c:13	4	103-04-406	Axial Joint	53540-SF1-004	

PRELUDE III (BA) **04/1986 - 01/1992**

2 111-04-499 4 103-04-406 4 103-04-406 2 111-04-499

3 111-04-486 UPPER 3 111-04-486

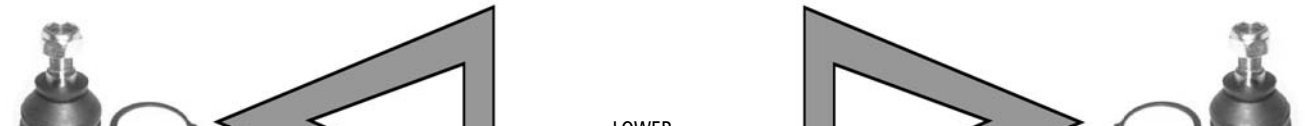

1 73-04-404 LOWER 1 73-04-404

Ref	ASHIKA CODE	Description	OEM	Measures	Ref	ASHIKA CODE	Description	OEM	Measures
1	**73-04-404**	Ball Joint Lower	51220 SEO 000	c:14.5	3	**111-04-486**	Ball Joint Upper	51270-SF1-003	c:13
2	**111-04-499**	Tie Rod End	53540 SF1004	c:14 th:FM12X1.25R	4	**103-04-406**	Axial Joint	53540-SF1-004	

O.E.M. names and numbers are used for reference purposes only Ashika assumes no responsibility for possible errors

PRELUDE IV (BB) **02/1992 - 09/1996**

THREAD HOUSING M14X1.5

4 **111-04-422** 2 **103-04-496** 2 **103-04-496** 5 **111-04-423**

THREAD HOUSING M14X1.25

4 **111-04-422** 3 **103-04-498** 3 **103-04-498** 5 **111-04-423**

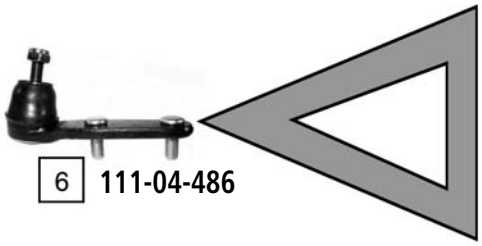

6 **111-04-486**

UPPER

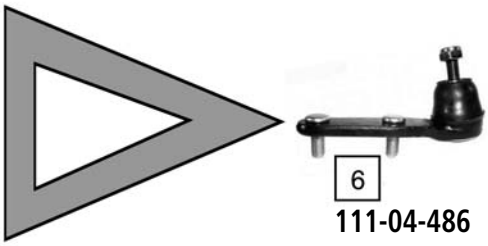

6 **111-04-486**

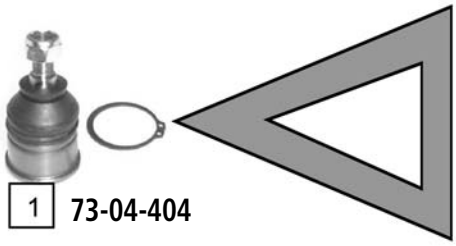

1 **73-04-404**

LOWER

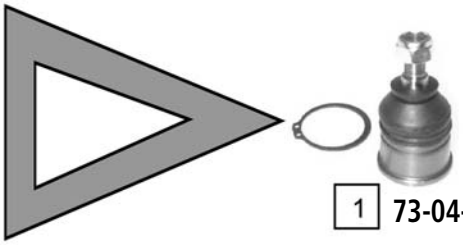

1 **73-04-404**

Ref.	ASHIKA CODE	Description	OEM	Measures	Ref	ASHIKA CODE	Description	OEM	Measures
1	**73-04-404**	Ball Joint Lower	51220 SE0 000	c:14.5	4	**111-04-422**	Tie Rod End Left	53560 SS0 003	
2	**103-04-496**	Axial Joint	53010-SS0-000	th:MM14X1,5R L:125	5	**111-04-423**	Tie Rod End Right	53540 SS0 003	
3	**103-04-498**	Axial Joint	53010-SS0-000	th:MM14X1,5R L:125	6	**111-04-486**	Ball Joint UPPER	51270-SF1-003	c:13

PRELUDE V (BB) **10/1996 - 10/2000**

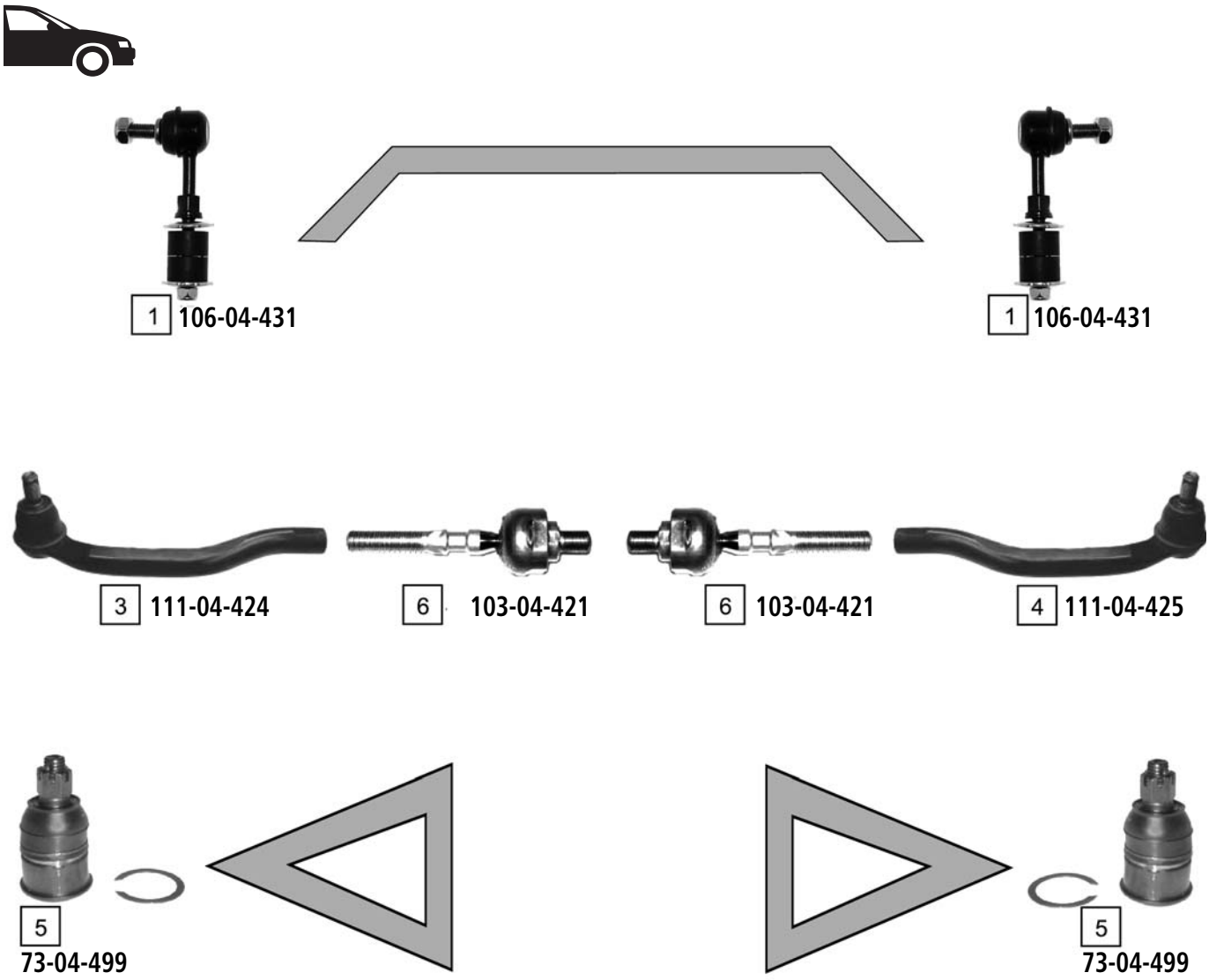

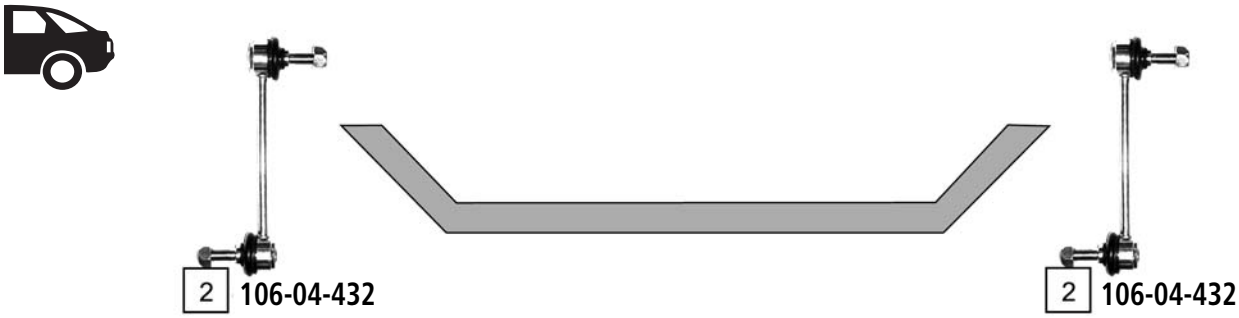

Ref	ASHIKA CODE	Description	OEM	Measures	Ref	ASHIKA CODE	Description	OEM	Measures
1	**106-04-431**	Stabiliser Link	51320-S30-003		4	**111-04-425**	Tie Rod End	53540-S30-005	
2	**106-04-432**	Stabiliser Link	52320-S30-003	L:165	5	**73-04-499**	Ball Joint	51220-SL5-013	c:18.5
3	**111-04-424**	Tie Rod End	53560-S30-005		6	**103-04-421**	Axial Joint	53010-SW5-000	th:MM14X1.25R L:122

O.E.M. names and numbers are used for reference purposes only Ashika assumes no responsibility for possible errors

QUINTET (SU) **02/1980 - 12/1984**

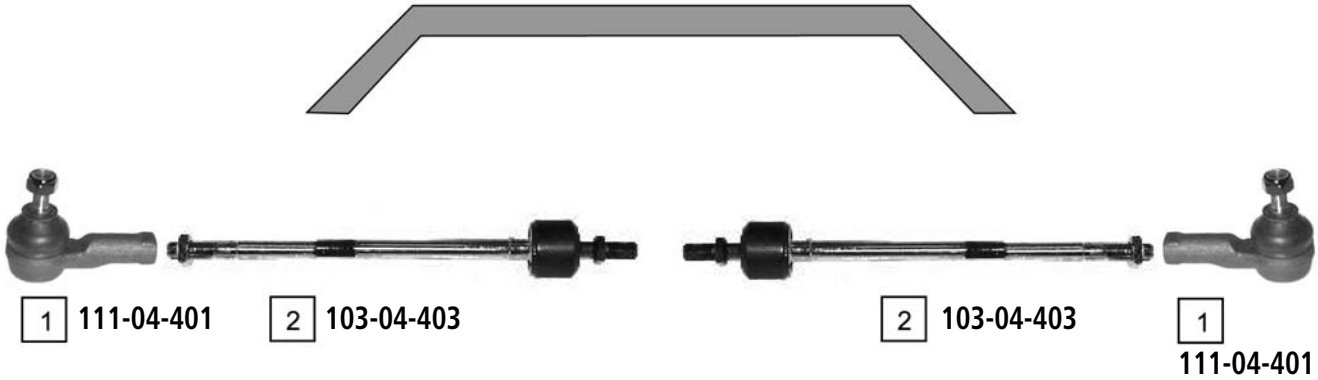

Ref.	ASHIKA CODE	Description	OEM	Measures	Ref	ASHIKA CODE	Description	OEM	Measures
1	**111-04-401**	Tie Rod End	53540-611-010	c:13 th:FM12X1.25R	2	**103-04-403**	Axial Joint	53521-SA0-003	

ACCENT (X-3) **07/1994 - 01/2000**

10 106-0H-H01

10 106-0H-H01

6 111-0H-H57

PS

3 103-0H-H01 3 103-0H-H01

MS

2 103-0H-H53 2 103-0H-H53

6 111-0H-H57

7 GOM-H03

4 73-0H-H54L

5 73-0H-H54R

8 GOM-H04

9 GOM-H05

1 73-0H-H57

1 73-0H-H57

Ref	ASHIKA CODE	Description	OEM	Measures	Ref	ASHIKA CODE	Description	OEM	Measures
1	**73-0H-H57**	Ball Joint	54520 31600	c:15	6	**111-0H-H57**	Tie Rod End	56820-28500	c:13.6 th:FM14X1.5R
2	**103-0H-H53**	Axial Joint	56540-22000	th:MM16X1.5R L:296.	7	**GOM-H03**	Silentblock For Susp.Arm	54551 02000	d:35
3	**103-0H-H01**	Axial Joint	57755-22000	th:MM16X1.5R L:295	8	**GOM-H04**	Silentblock For Susp.Arm	54555 22100	
4	**73-0H-H54L**	TCA Left	54500-22200		9	**GOM-H05**	Silentblock For Susp.Arm	54556 22100	
5	**73-0H-H54R**	TCA Right	54501-22200		10	**106-0H-H01**	Stabiliser Link	54825 22000	

O.E.M. names and numbers are used for reference purposes only Ashika assumes no responsibility for possible errors

ACCENT (LC) 01/2000 ->

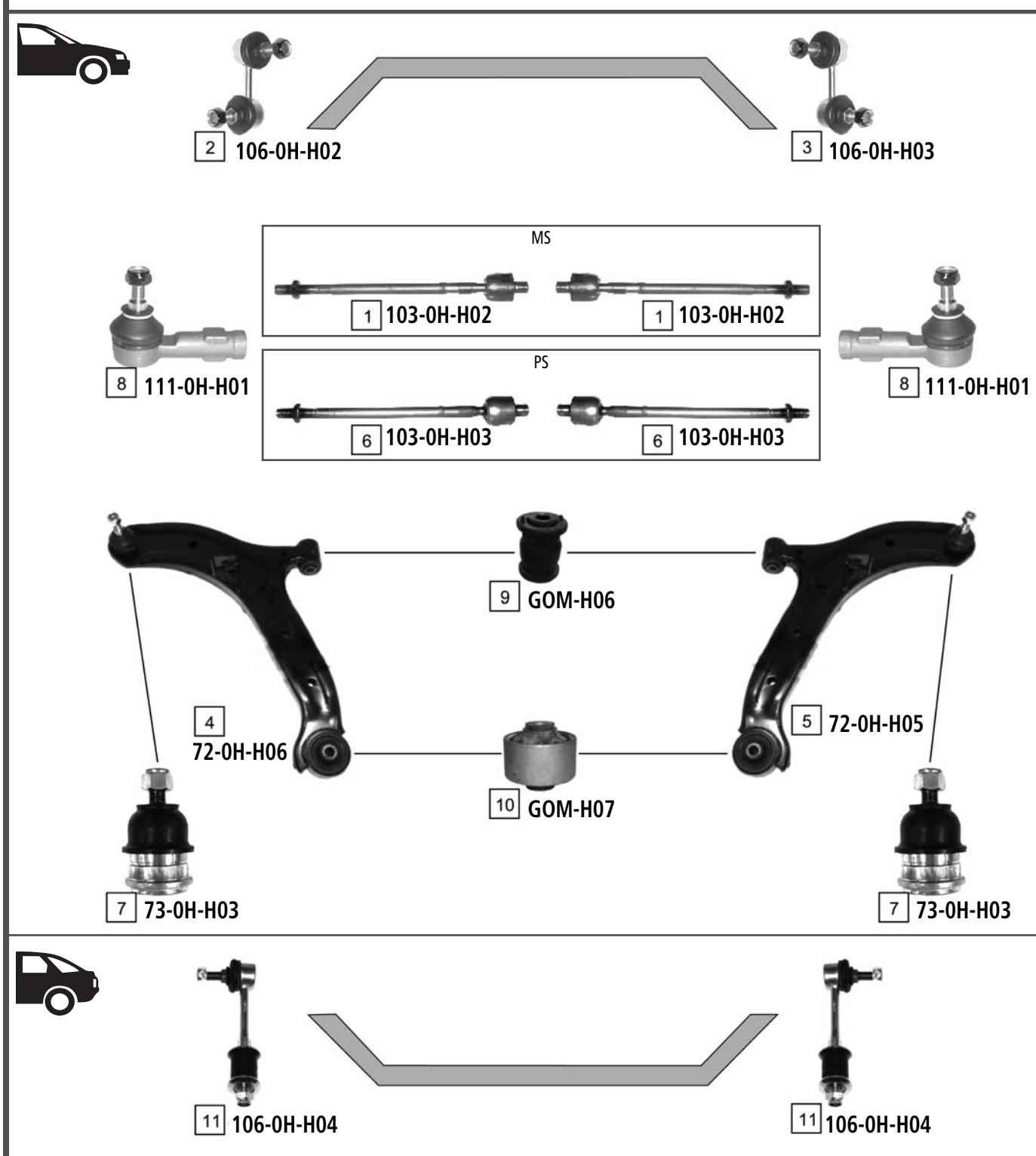

Ref.	ASHIKA CODE	Description	OEM	Measures	Ref	ASHIKA CODE	Description	OEM	Measures
1	**103-0H-H02**	Axial Joint	56540-25000	th:MM16X1.5R L:305	7	**73-0H-H03**	Ball Joint	54503-25A00	c:15
2	**106-0H-H02**	Stabiliser Link Left	54830-25010	L:60	8	**111-0H-H01**	Tie Rod End	56820-25000	c:13.8 th:FM14X1.5R
3	**106-0H-H03**	Stabiliser Link Right	54830-25020	L:60	9	**GOM-H06**	Silentblock For Susp.Arm	54551 25000	
4	**72-0H-H06**	TCA Left	54500-25000	c:15	10	**GOM-H07**	Silentblock For Susp.Arm	54555 25000	
5	**72-0H-H05**	TCA Right	54501-25000	c:15	11	**106-0H-H04**	Stabiliser Link	55830 25000	
6	**103-0H-H03**	Axial Joint	57730 43010	th:MM16X1.5R L:292					

ACCENT (MC) 12/2005 ->

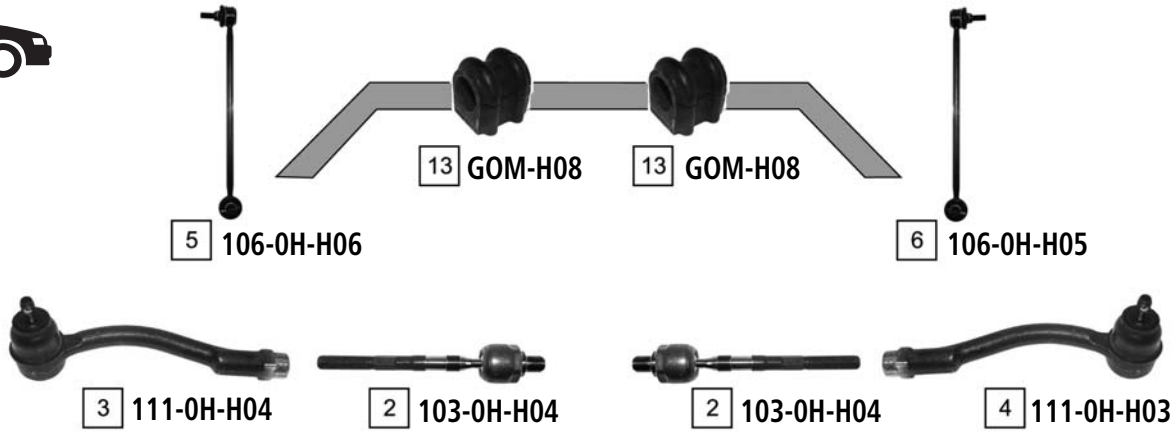

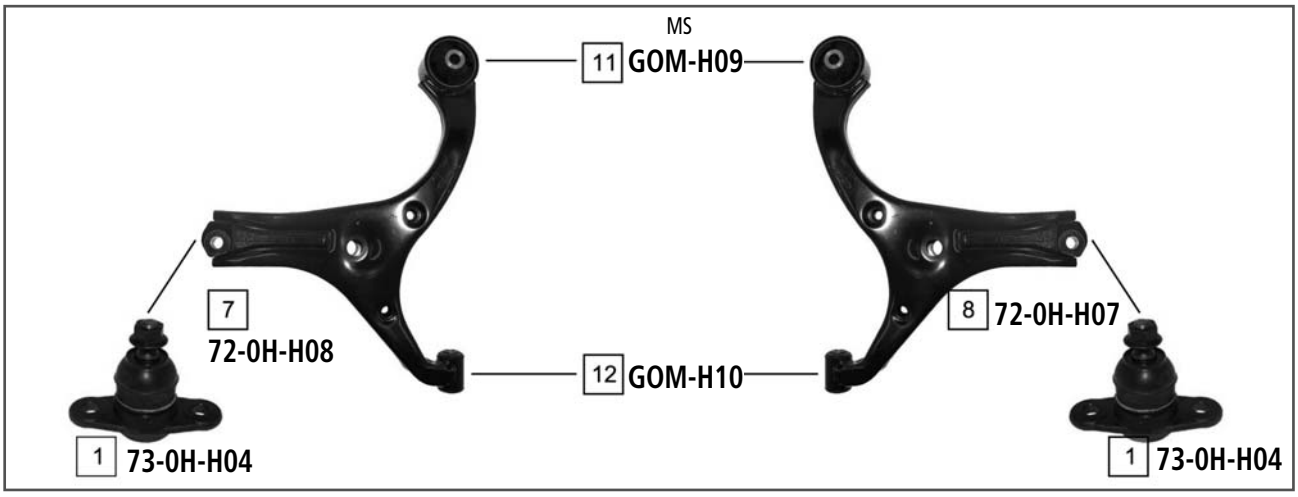

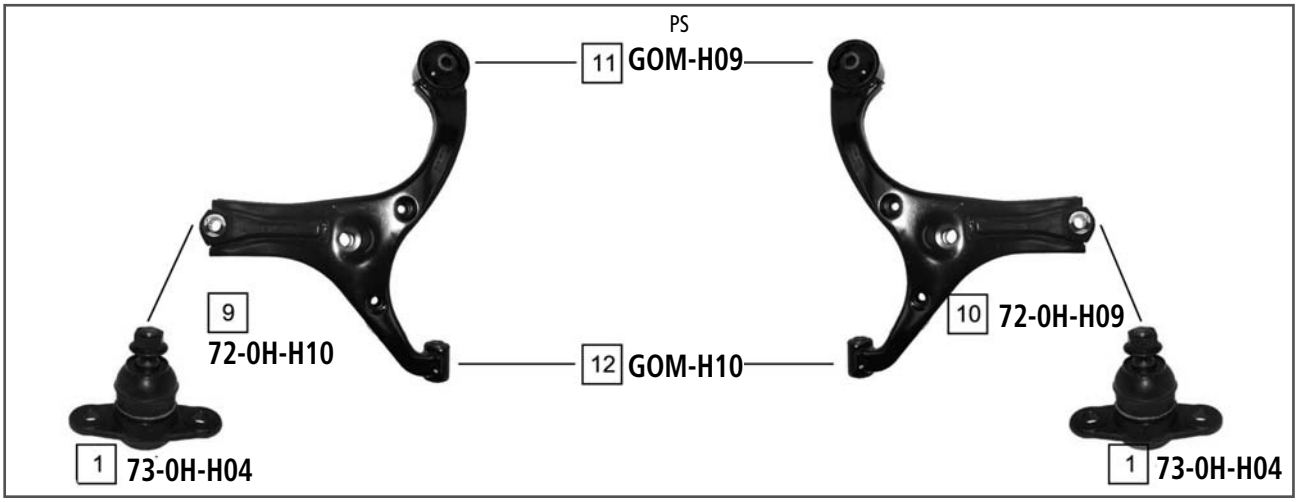

Ref	ASHIKA CODE	Description	OEM	Measures	Ref	ASHIKA CODE	Description	OEM	Measures
1	73-0H-H04	Ball Joint	51760 1G000		8	72-0H-H07	TCA Right	54501 1E100	
2	103-0H-H04	Axial Joint	57724 1E000	th:MM16X1.5R L:195	9	72-0H-H10	TCA Left	54500 1E000	
3	111-0H-H04	Tie Rod End Left	56820 1E000		10	72-0H-H09	TCA Right	54501 1E000	
4	111-0H-H03	Tie Rod End Right	56820 1E900		11	GOM-H09	Silentblock For Susp.Arm	54584 1G000	
5	106-0H-H06	Stabiliser Link Left	54830 1G000	L:285.5	12	GOM-H10	Silentblock For Susp.Arm	54551 1E000	
6	106-0H-H05	Stabiliser Link Right	54840 1G000	L:285.5	13	GOM-H08	Stabiliser Mounting	54812 1G100	
7	72-0H-H08	TCA Left	54500 1E100						

O.E.M. names and numbers are used for reference purposes only Ashika assumes no responsibility for possible errors

ATOS (MX) 02/1998 ->

8 106-0H-H07

8 106-0H-H07

MS

1 111-0H-H82

1 111-0H-H82

PS

2 103-0H-H05

2 103-0H-H05

7 111-0H-H95

7 111-0H-H95

9 GOM-H03

4 72-0H-H04

5 72-0H-H03

6 73-0H-H02

6 73-0H-H02

10 GOM-H04

11 GOM-H05

3 111-0H-H91

3 111-0H-H91

Ref.	ASHIKA CODE	Description	OEM	Measures	Ref	ASHIKA CODE	Description	OEM	Measures
1	111-0H-H82	Axial Joint	56540-02000		7	111-0H-H95	Tie Rod End	56820-02500	c:13.8 th:FM12X1.25
2	103-0H-H05	Axial Joint	57755-02000		8	106-0H-H07	Stabiliser Link	54820 02000	L:70
3	111-0H-H91	Stabiliser Link	55530-29000	L:130	9	GOM-H03	Silentblock For Susp.Arm	54551 02000	d:35
4	72-0H-H04	TCA Left	54500 02050	c:14.5	10	GOM-H04	Silentblock For Susp.Arm	54555 22100	
5	72-0H-H03	TCA Right	54501 02050	c:14.5	11	GOM-H05	Silentblock For Susp.Arm	54556 22100	
6	73-0H-H02	Ball Joint	54530-02050	c:13.35					

COUPE (RD) **08/1996 - 02/2002**

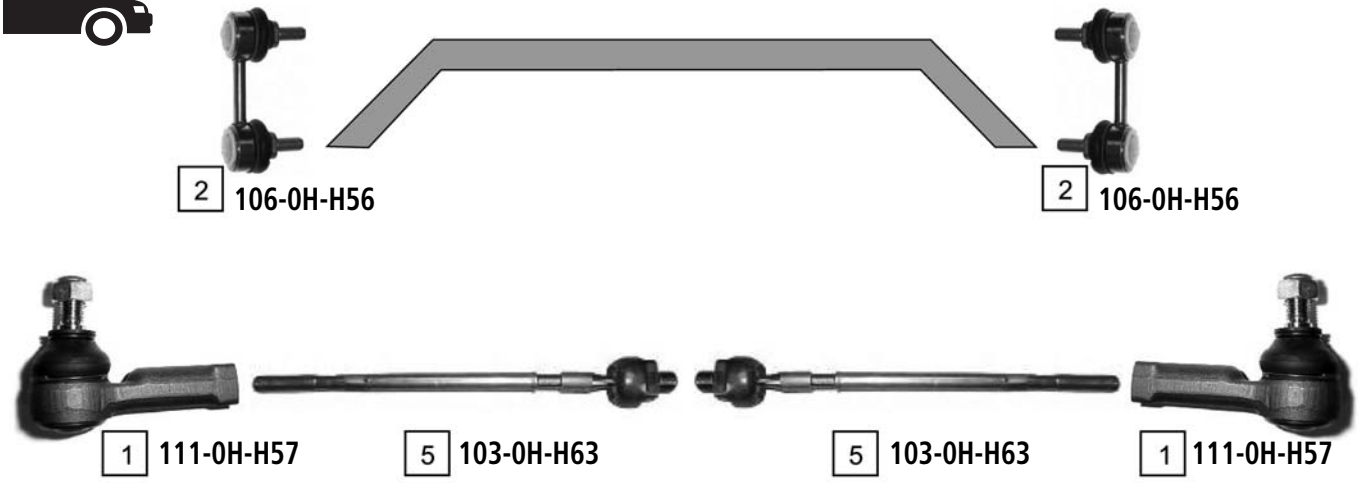

Ref	ASHIKA CODE	Description	OEM	Measures	Ref	ASHIKA CODE	Description	OEM	Measures
1	**111-0H-H57**	Tie Rod End	56820-28500	c:13.6 th:FM14X1.5R	5	**103-0H-H63**	Axial Joint	57730 29000	th:MM16X1.5R L:317
2	**106-0H-H56**	Stabiliser Link	54830-29000	L:70.5	6	**73-0H-H55L**	TCA	54500-29000	
3	**111-0H-H91**	Stabiliser Link	55530-29000	L:130	7	**73-0H-H55R**	TCA	54501-29000	
4	**73-0H-H57**	Ball Joint	54520 31600	c:15					

O.E.M. names and numbers are used for reference purposes only Ashika assumes no responsibility for possible errors

COUPE (GK) 03/2002 ->

Ref.	ASHIKA CODE	Description	OEM	Measures	Ref	ASHIKA CODE	Description	OEM	Measures
1	**106-0H-H09**	Stabiliser Link	54840 2C000	L:286	5	**72-0H-H12**	TCA Left	54500-2C000	
2	**106-0H-H08**	Stabiliser Link	54830-2C000	L:286	6	**72-0H-H11**	TCA Right	54501-2C000	
3	**103-0H-H06**	Axial Joint	57724-2D000	th:MM16X1.5R L:327	7	**73-0H-H03**	Ball Joint	54503-25A00	c:15
4	**111-0H-H01**	Tie Rod End	56820-25000	c:13.8 th:FM14X1.5R					

ELANTRA (XD) **06/2000 ->**

1 106-0H-H53

1 106-0H-H53

5 111-0H-H01

2 103-0H-H06

2 103-0H-H06

5 111-0H-H01

3 72-0H-H14

4 72-0H-H13

6 73-0H-H03

6 73-0H-H03

7 111-0H-H91

7 111-0H-H91

Ref	ASHIKA CODE	Description	OEM	Measures	Ref	ASHIKA CODE	Description	OEM	Measures
1	**106-0H-H53**	Stabiliser Link	54830 34500	L:52	5	**111-0H-H01**	Tie Rod End	56820-25000	c:13.8 th:FM14X1.5R
2	**103-0H-H06**	Axial Joint	57724-2D000	th:MM16X1.5R L:327	6	**73-0H-H03**	Ball Joint	54503-25A00	c:15
3	**72-0H-H14**	TCA	54500 2D000		7	**111-0H-H91**	Stabiliser Link	55530-29000	L:130
4	**72-0H-H13**	TCA	54501 2D000						

O.E.M. names and numbers are used for reference purposes only Ashika assumes no responsibility for possible errors

GALLOPER II (JK-01) 08/1998 ->

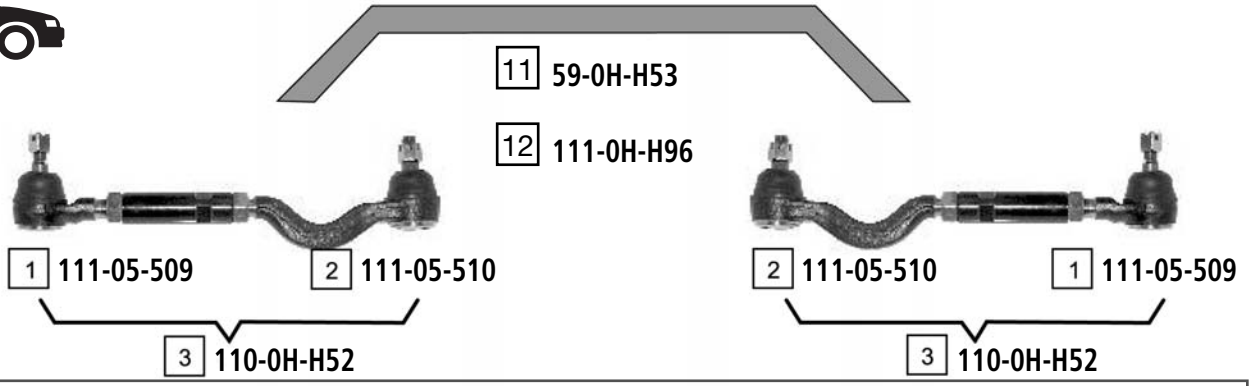

UPPER

LOWER

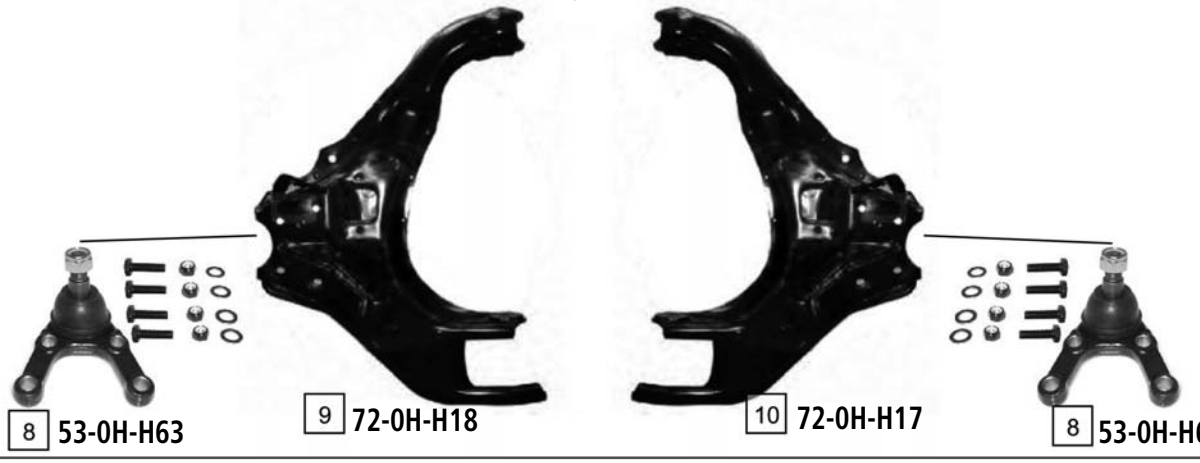

Ref.	ASHIKA CODE	Description	OEM	Measures	Ref	ASHIKA CODE	Description	OEM	Measures
1	**111-05-509**	Tie Rod End	MB241171	c:13.6 th:MM16X1.5L	7	**111-0H-H98**	Ball Joint UPPER Right	54431-44000	
2	**111-05-510**	Tie Rod End	MB241206	c:13.8 th:MM16X1.5R	8	**53-0H-H63**	Ball Joint	HB212-100	c:19.5
3	**110-0H-H52**	Tie Rod	HB568-100		9	**72-0H-H18**	TCA Left	HB212003	
4	**72-0H-H16**	TCA	MB109630A		10	**72-0H-H17**	TCA Right	HB212004	
5	**72-0H-H15**	TCA	MB109631A		11	**59-0H-H53**		MB673525B	
6	**111-0H-H97**	Ball Joint UPPER Left	54417-44000		12	**59-0H-H96**		MB673525A	

GETZ (TB) **09/2002 ->**

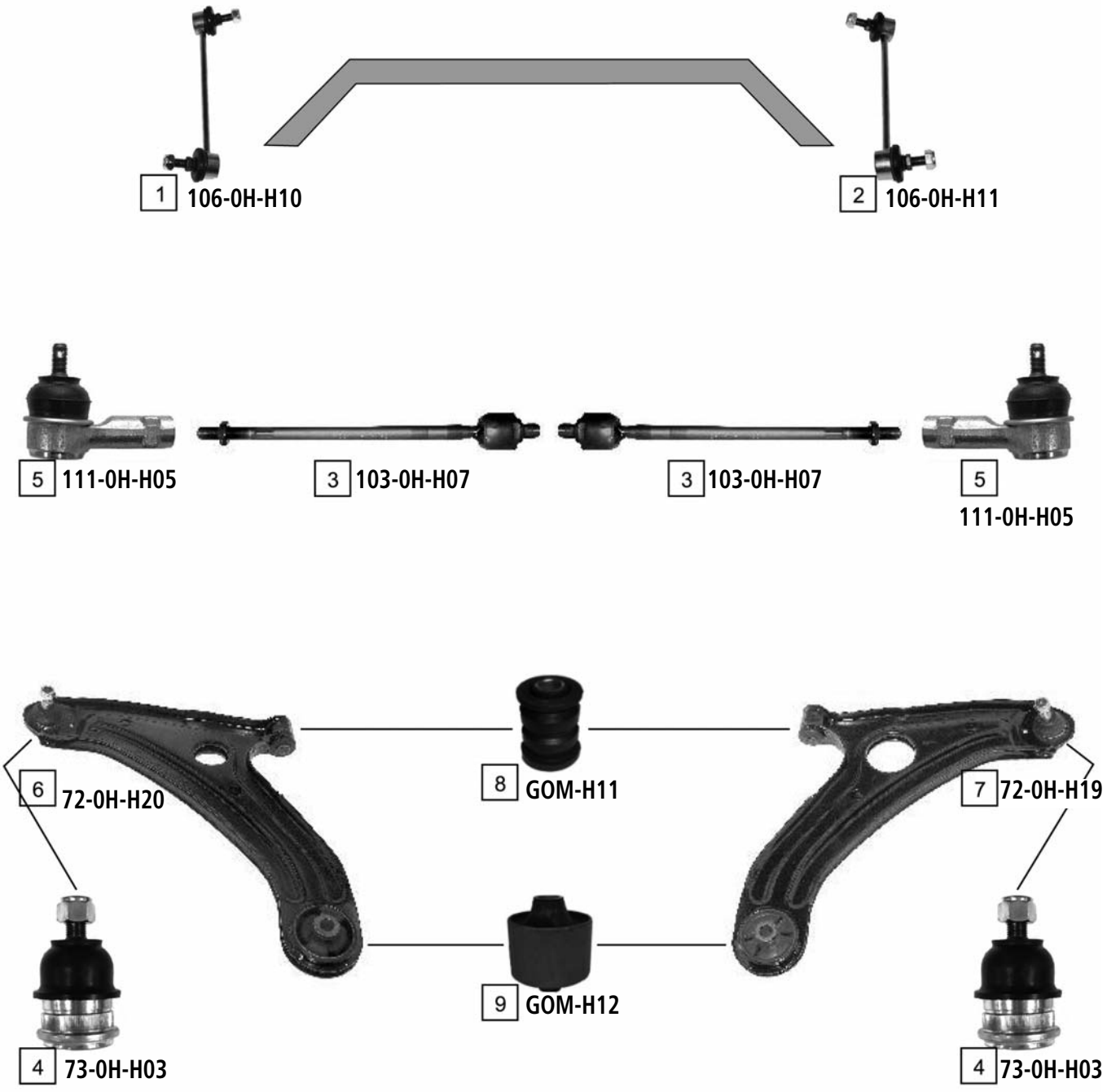

Ref	ASHIKA CODE	Description	OEM	Measures	Ref	ASHIKA CODE	Description	OEM	Measures
1	**106-0H-H10**	Stabiliser Link Left	54830-1C000	L:198	6	**72-0H-H20**	TCA Left	54500-1C000	c:15
2	**106-0H-H11**	Stabiliser Link Right	54840-1C000	L:198	7	**72-0H-H19**	TCA Right	54501-1C000	c:15
3	**103-0H-H07**	Axial Joint	57755-1C000	th:MM16X1.5R L:316	8	**GOM-H11**	Silentblock For Susp.Arm	Part of 72-0H-H20 / 72-0H-H19	d:32.8
4	**73-0H-H03**	Ball Joint	54503-25A00	c:15	9	**GOM-H12**	Silentblock For Susp.Arm	Part of 72-0H-H20 / 72-0H-H19	d:63.3
5	**111-0H-H05**	Tie Rod End	56820-3B000	c:13.4 th:FM14X1.5R					

O.E.M. names and numbers are used for reference purposes only Ashika assumes no responsibility for possible errors

H1 / H200 / STAREX

01/1996 - 11/2002

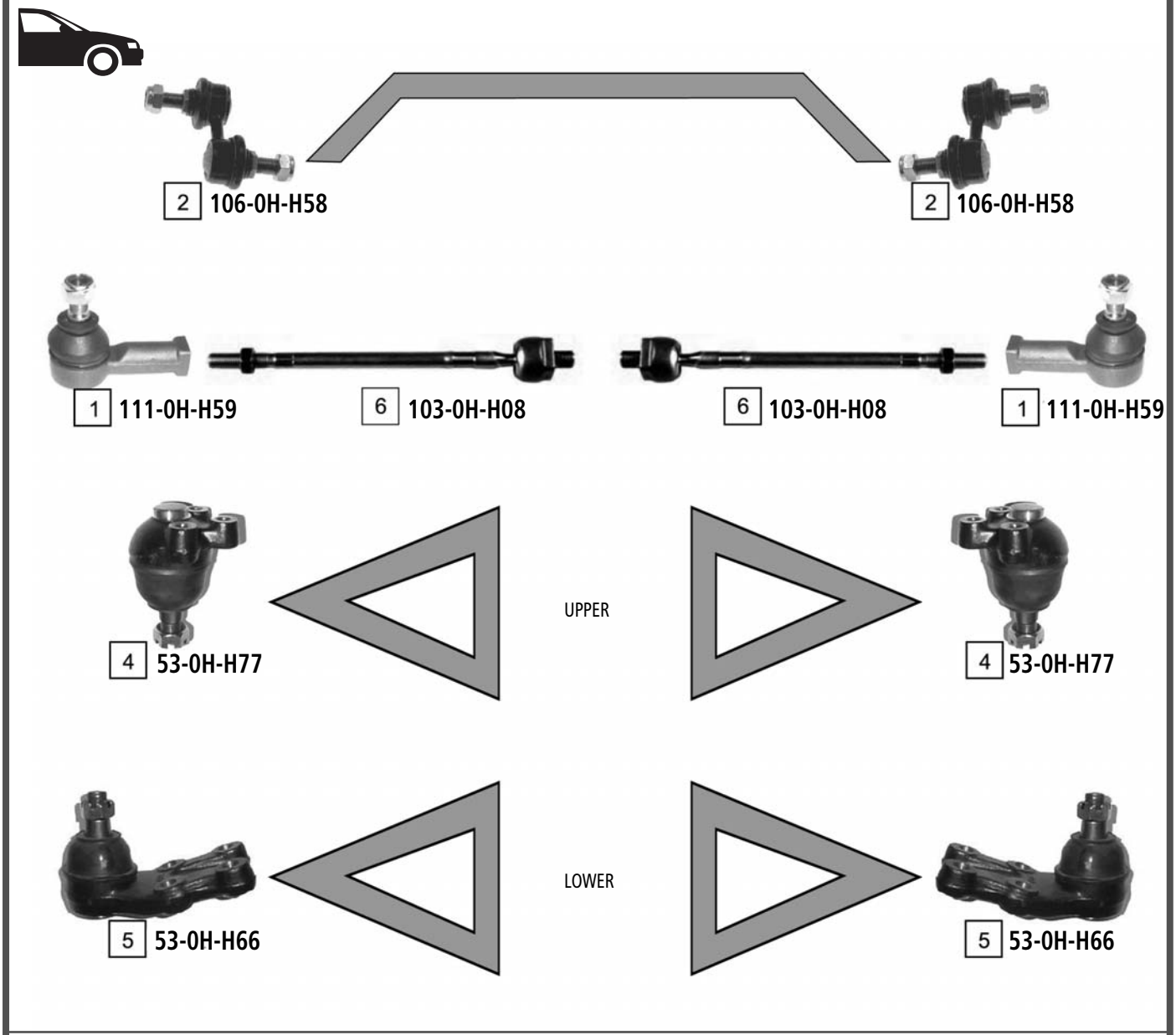

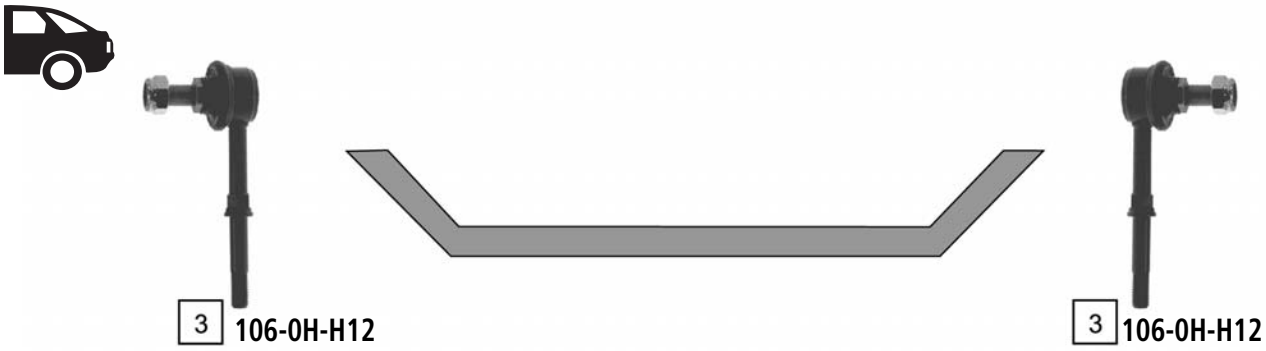

Ref.	ASHIKA CODE	Description	OEM	Measures	Ref	ASHIKA CODE	Description	OEM	Measures
1	**111-0H-H59**	Tie Rod End	56872 43010	c:13.7 th:FM14X1.5L	4	**53-0H-H77**	Ball Joint Upper	54417 43A00	c:17.6
2	**106-0H-H58**	Stabiliser Link	54830-4A003	L:54	5	**53-0H-H66**	Ball Joint	54530-4AA00	c:19.5
3	**106-0H-H12**	Stabiliser Link	55530-4A001		6	**103-0H-H08**	Axial Joint	57729 4A000	th:MM16X1.5R L:292

H100 **07/1993 - 02/2004**

9 111-0H-H59

MS

4 103-0H-H02 4 103-0H-H02

PS

8 103-0H-H03 8 103-0H-H03

9 111-0H-H59

UPPER

PICK UP

10 53-0H-H77

10 53-0H-H77

VAN

7 111-0H-H001

13 111-0H-H003

14 111-0H-H002

7 111-0H-H001

LOWER

PICK UP

1 73-05-514

5 71-0H-H02

12 GOM-H13

6 71-0H-H01

1 73-05-514

VAN

1 73-05-514

2 111-0H-H005

11 GOM-H14

3 111-0H-H004

1 73-05-514

Ref	ASHIKA CODE	Description	OEM	Measures	Ref	ASHIKA CODE	Description	OEM	Measures
1	**73-05-514**	Ball Joint Lower		c:19.6	8	**103-0H-H03**	Axial Joint	57730 43010	th:MM16X1.5R L:292
2	**111-0H-H005**	TCA	54510 43152	c:19.5	9	**111-0H-H59**	Tie Rod End	56872 43010	c:13.7 th:FM14X1.5R
3	**111-0H-H004**	TCA	54540 43152	c:19.5	10	**53-0H-H77**	Ball Joint Upper	54417 43A00	c:17.6
4	**103-0H-H02**	Axial Joint	56540-25000	th:MM16X1.5R L:305	11	**GOM-H14**	Silentblock For Susp.Arm	Part of 111-0H-H005/111-0H-H004	d:45.8
5	**71-0H-H02**	TCA Left	54510 4B001	c:19.6	12	**GOM-H13**	Silentblock For Susp.Arm	Part of 71-0H-H02/71-0H-H01	d:42.3
6	**71-0H-HO1**	TCA Right	54540 4B001	c:19.6	13	**111-0H-H003**	TCA Left	54410 43004	
7	**111-0H-H001**	Ball Joint Upper	54417 43000		14	**111-0H-H002**	TCA Right	54430 43004	

O.E.M. names and numbers are used for reference purposes only Ashika assumes no responsibility for possible errors

LANTRA I (J-1) **10/1990 - 11/1995**

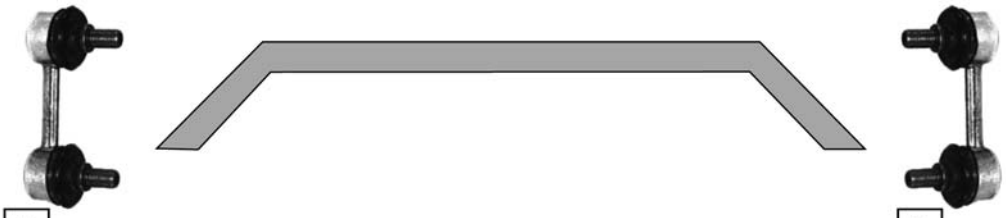

7 **106-0H-H51**

7 **106-0H-H51**

5 **111-0H-H57**
PS 05/1992 ->

4 **111-0H-H54**
MS -> 04/1992

1 **103-0H-H55**
ALL -> 04/1992

1 **103-0H-H55**
ALL -> 04/1992

2 **103-0H-H01**
PS -> 05/1993

2 **103-0H-H01**
PS -> 05/1993

3 **103-0H-H56**
PS 06/1993 ->

3 **103-0H-H56**
PS 06/1993 ->

5 **111-0H-H57**
PS 05/1992 ->

4 **111-0H-H54**
MS -> 04/1992

6 **53-0H-H54**

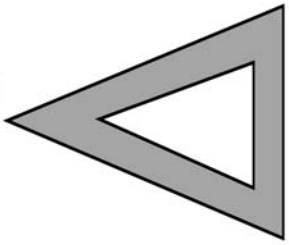

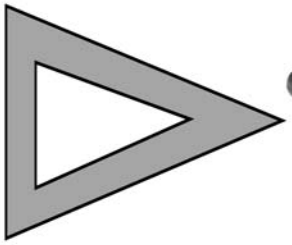

6 **53-0H-H54**

Ref.	ASHIKA CODE	Description	OEM	Measures	Ref	ASHIKA CODE	Description	OEM	Measures
1	**103-0H-H55**	Axial Joint	57730-28000		5	**111-0H-H57**	Tie Rod End	56820-28500	c:13.6 th:FM14X1.5R
2	**103-0H-H01**	Axial Joint	57755-22000	th:MM16X1.5R L:295	6	**53-0H-H54**	Ball Joint	5453028000	c:15
3	**103-0H-H56**	Axial Joint	56540 28020	th:MM16X1.5R L:298	7	**106-0H-H51**	Stabiliser Link	54830 28000	L:61
4	**111-0H-H54**	Tie Rod End	56820-28000	c:13.4 th:FM12X1.25					

LANTRA II (J-2) **11/1995 - 06/2000**

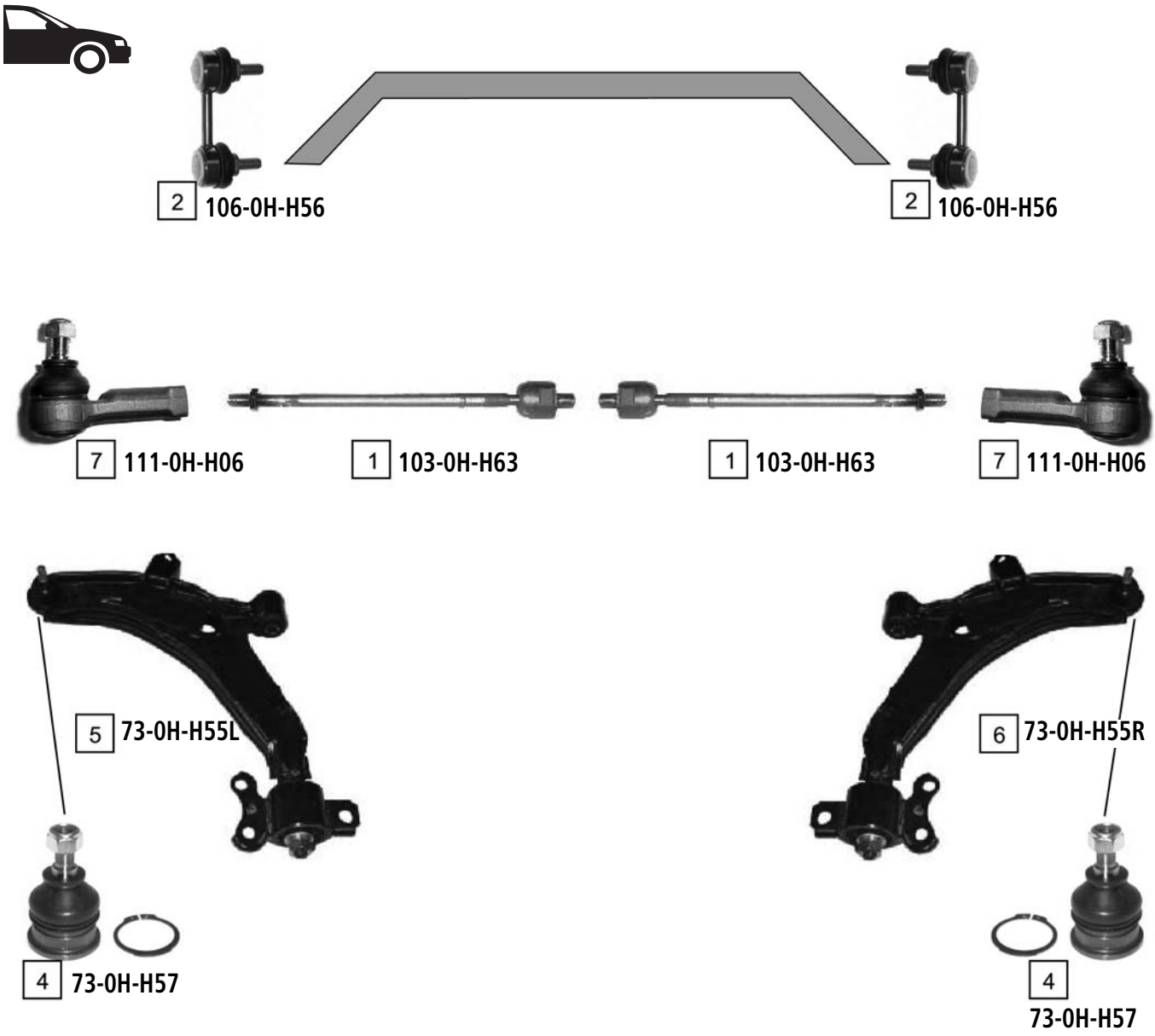

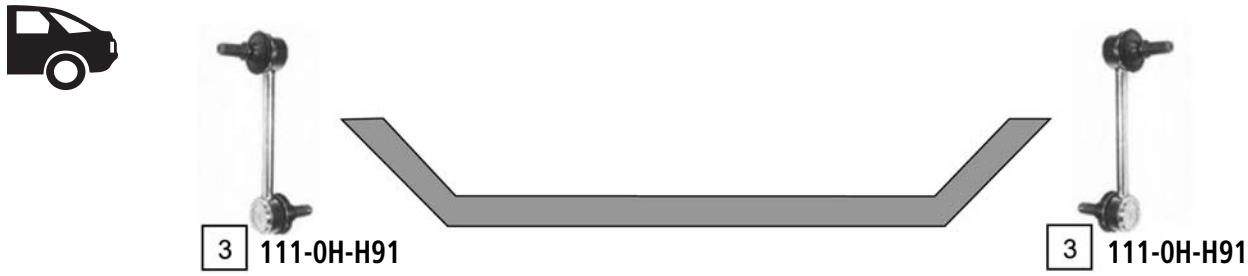

Ref	ASHIKA CODE	Description	OEM	Measures	Ref	ASHIKA CODE	Description	OEM	Measures
1	**103-0H-H63**	Axial Joint	57730 29000	th:MM16X1.5R L:317	5	**73-0H-H55L**	TCA	54500-29000	
2	**106-0H-H56**	Stabiliser Link	54830-29000	L:70.5	6	**73-0H-H55R**	TCA	54501-29000	
3	**111-0H-H91**	Stabiliser Link	55530-29000	L:130	7	**111-0H-H06**	Tie Rod End	56820-22000	c:13.6 th:FM14X1.5R
4	**73-0H-H57**	Ball Joint	54520 31600	c:15					

O.E.M. names and numbers are used for reference purposes only Ashika assumes no responsibility for possible errors

MATRIX (FC) 06/2001 ->

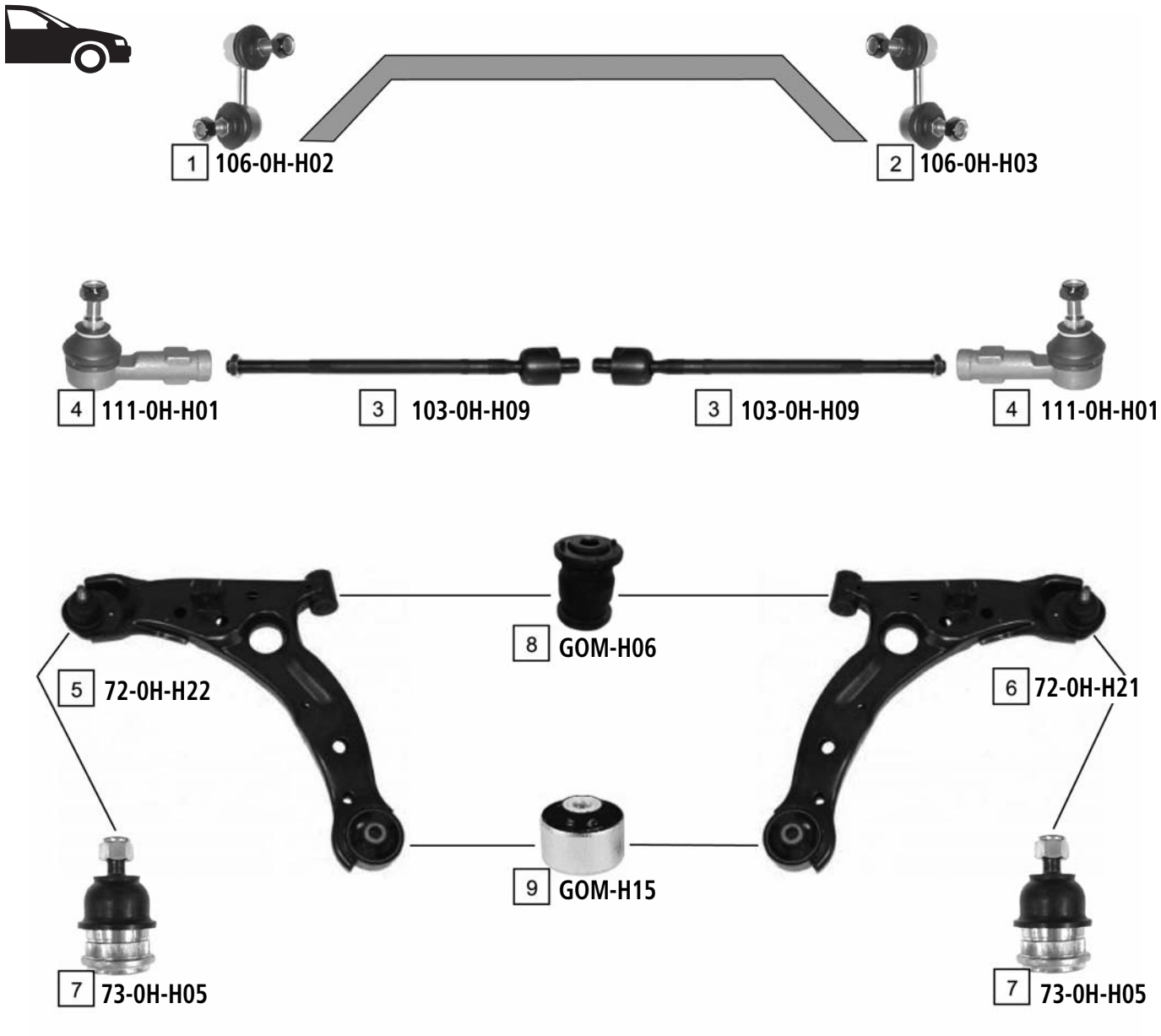

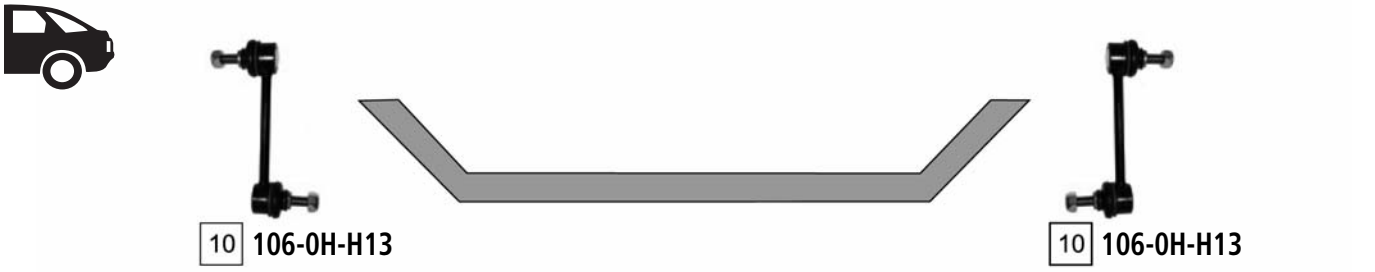

Ref.	ASHIKA CODE	Description	OEM	Measures	Ref	ASHIKA CODE	Description	OEM	Measures
1	**106-0H-H02**	Stabiliser Link Left	54830-25010	L:60	6	**72-0H-H21**	TCA Right	54501-17000	
2	**106-0H-H03**	Stabiliser Link Right	54830-25020	L:60	7	**73-0H-H05**	Ball Joint	54503-38A00	
3	**103-0H-H09**	Axial Joint	57755-17000	th:MM16X1.5R L:322	8	**GOM-H06**	Silentblock For Susp.Arm	54551 25000	
4	**111-0H-H01**	Tie Rod End	56820-25000	c:13.8 th:FM14X1.5R	9	**GOM-H15**	Silentblock For Susp.Arm	54584-17000	
5	**72-0H-H22**	TCA Left	54500-17000		10	**106-0H-H13**	Stabiliser Link	55530 17000	L:128.5

PONY
EXCEL I

04/1974 - 01/1989

-> 06/1986

6 **111-0H-H52**

6 **111-0H-H52**

PS 07/1986 ->

1 **111-0H-H53**

3 **103-05-501**

3 **103-05-501**

1 **111-0H-H53**

MS 07/1986 ->

1 **111-0H-H53**

2 **103-0H-H53**

2 **103-0H-H53**

1 **111-0H-H53**

-> 06/1986

7 **53-05-505**

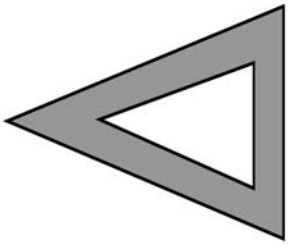

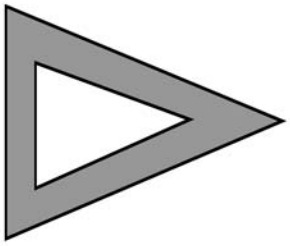

7 **53-05-505**

07/1986 ->

5 **53-0H-H52L**

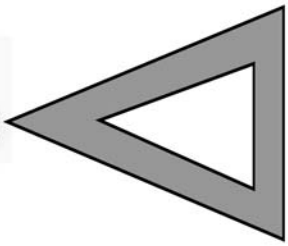

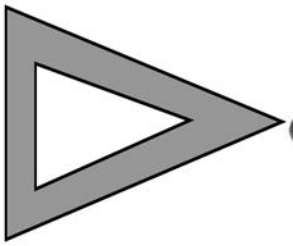

4 **53-0H-H52R**

Ref	ASHIKA CODE	Description	OEM	Measures	Ref	ASHIKA CODE	Description	OEM	Measures
1	**111-0H-H53**	Tie Rod End	56820-21000	c:13.45 th:FM14X1.5	5	**53-0H-H52L**	Ball Joint Lower Left	54530 21000	c:13.5
2	**103-0H-H53**	Axial Joint	56540-22000	th:MM16X1.5R L:296	6	**111-0H-H52**	Tie Rod End	56820 11060	c:12.5 th:MM14X1.5L
3	**103-05-501**	Axial Joint	MB122135	th:FM18X1.5R L:297	7	**53-05-505**	Ball Joint	MB001696	c:15
4	**53-0H-H52R**	Ball Joint Lower Right	54540 21000	c:13.5					

O.E.M. names and numbers are used for reference purposes only Ashika assumes no responsibility for possible errors

PONY (X-2) 10/1989 - 01/1995
S COUPE (SLC) 02/1990 - 05/1996

MS

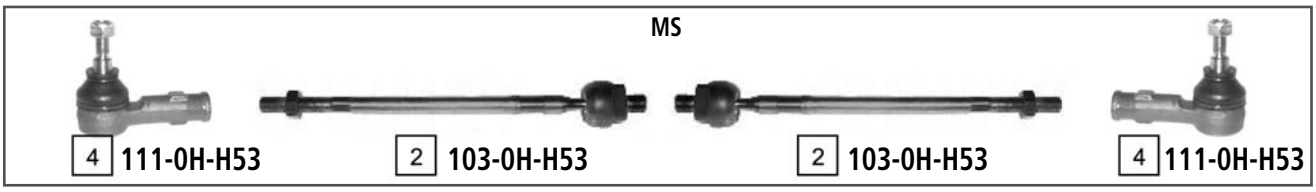

PS EXC TRW

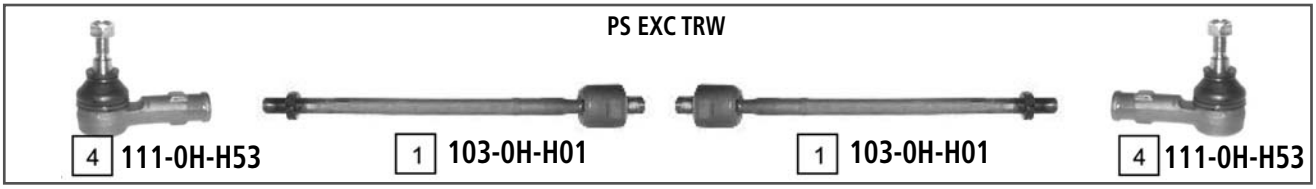

PS TRW

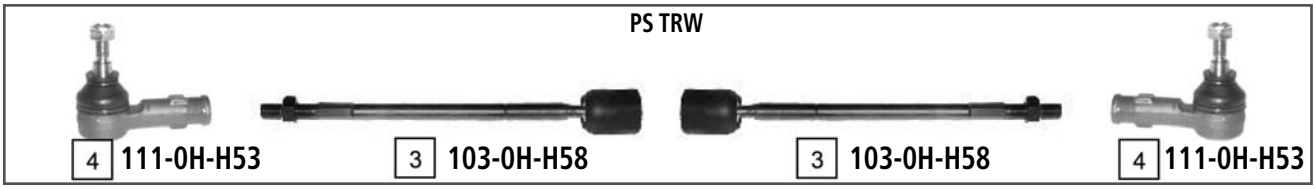

Ref.	ASHIKA CODE	Description	OEM	Measures	Ref	ASHIKA CODE	Description	OEM	Measures
1	**103-0H-H01**	Axial Joint	57755-22000	th:MM16X1.5R L:295	5	**73-0H-H53**	Ball Joint	54530-24A00	c:15
2	**103-0H-H53**	Axial Joint	56540-22000	th:MM16X1.5R L:296	6	**106-05-501**	Stabiliser Link	4056 A014	L:60
3	**103-0H-H58**	Axial Joint	57730-24100	th:FM14X1.5R L:303	7	**72-0H-H24**	TCA Left	54502 24001	
4	**111-0H-H53**	Tie Rod End	56820-21110	c:13.3 th:FM14X1.5R	8	**72-0H-H23**	TCA Right	54503 24001	

SANTA FE (SM) **01/2002 - 02/2006**

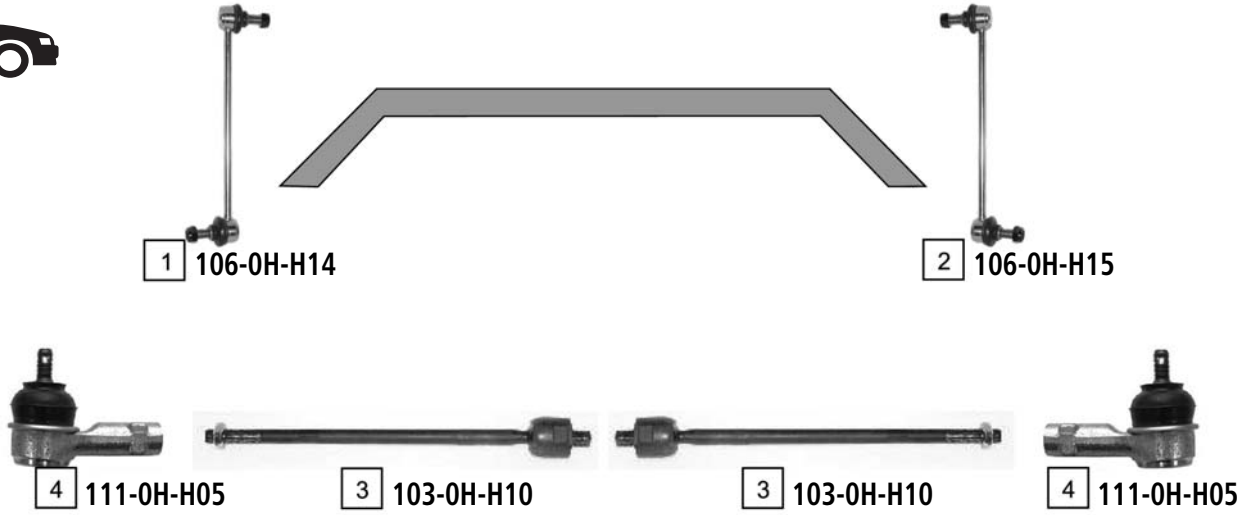

Ref	ASHIKA CODE	Description	OEM	Measures	Ref	ASHIKA CODE	Description	OEM	Measures
1	**106-0H-H14**	Stabiliser Link Left	54830-26000	L:264	6	**72-0H-H02**	TCA Right Wbj	54502-26000	
2	**106-0H-H15**	Stabiliser Link Right	54840-26000	L:264	7	**73-0H-H01**	Ball Joint	54503-3BA00	c:20
3	**103-0H-H10**	Axial Joint	57785-26200	th:MM16X1.5R L:328	8	**106-0H-H16**	Stabiliser Link Left	55530 26600	L:117
4	**111-0H-H05**	Tie Rod End	56820-3B000	c:13.4 th:FM14X1.5R	9	**106-0H-H17**	Stabiliser Link Left	55540 26600	L:117
5	**72-0H-H01**	TCA Left Wbj	54501-26000						

O.E.M. names and numbers are used for reference purposes only Ashika assumes no responsibility for possible errors

SANTA FE 03/2006 ->

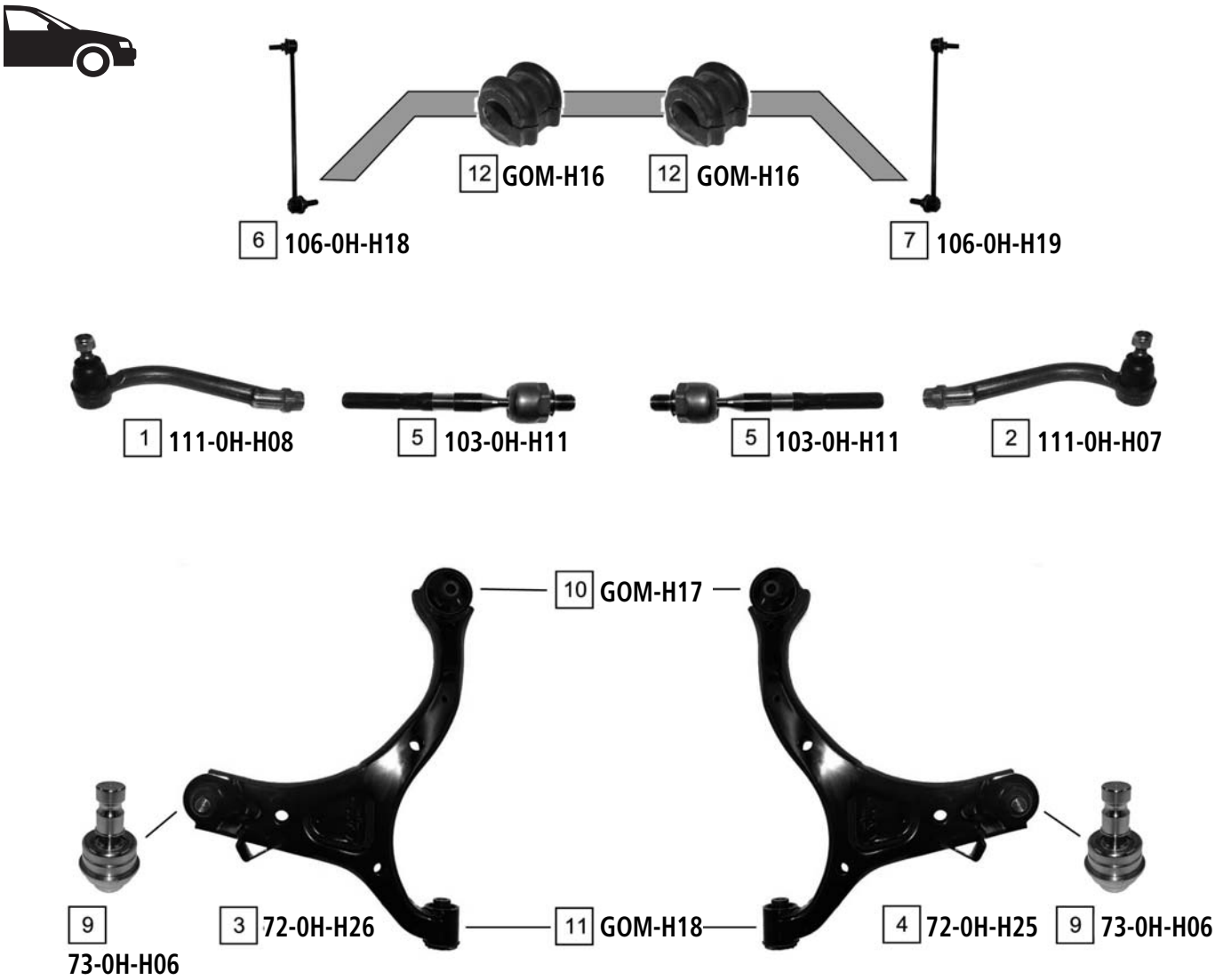

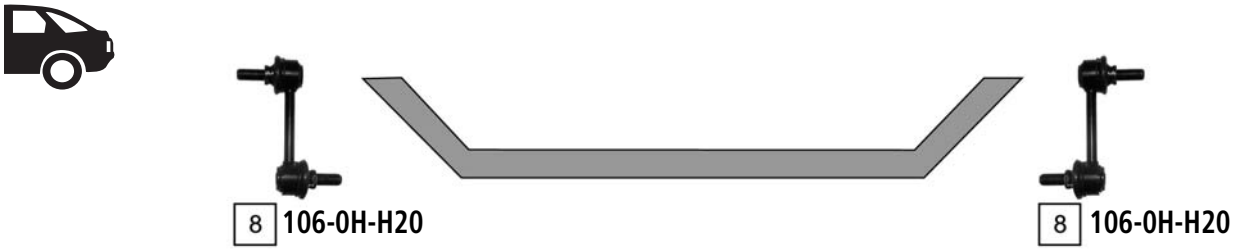

Ref.	ASHIKA CODE	Description	OEM	Measures	Ref	ASHIKA CODE	Description	OEM	Measures
1	111-0H-H08	Tie Rod End Left	56820 2B000		7	106-0H-H19	Stabiliser Link Right	54840 2B000	
2	111-0H-H07	Tie Rod End Right	56820 2B900		8	106-0H-H20	Stabiliser Link	55530 2B000	
3	72-0H-H26	TCA Left Wbj	54500 2B100		9	73-0H-H06	Ball Joint	54530 2B000	
4	72-0H-H25	TCA Right Wbj	54501 2B100		10	GOM-H17	Silentblock For Susp.Arm	54584 2B000	
5	103-0H-H11	Axial Joint	57724 2B000		11	GOM-H18	Silentblock For Susp.Arm	54551 2B000	
6	106-0H-H18	Stabiliser Link Left	54830 2B000		12	GOM-H16	Stabiliser Mounting	54813 3K100	

SONATA I (Y-2) **09/1988 - 10/1993**

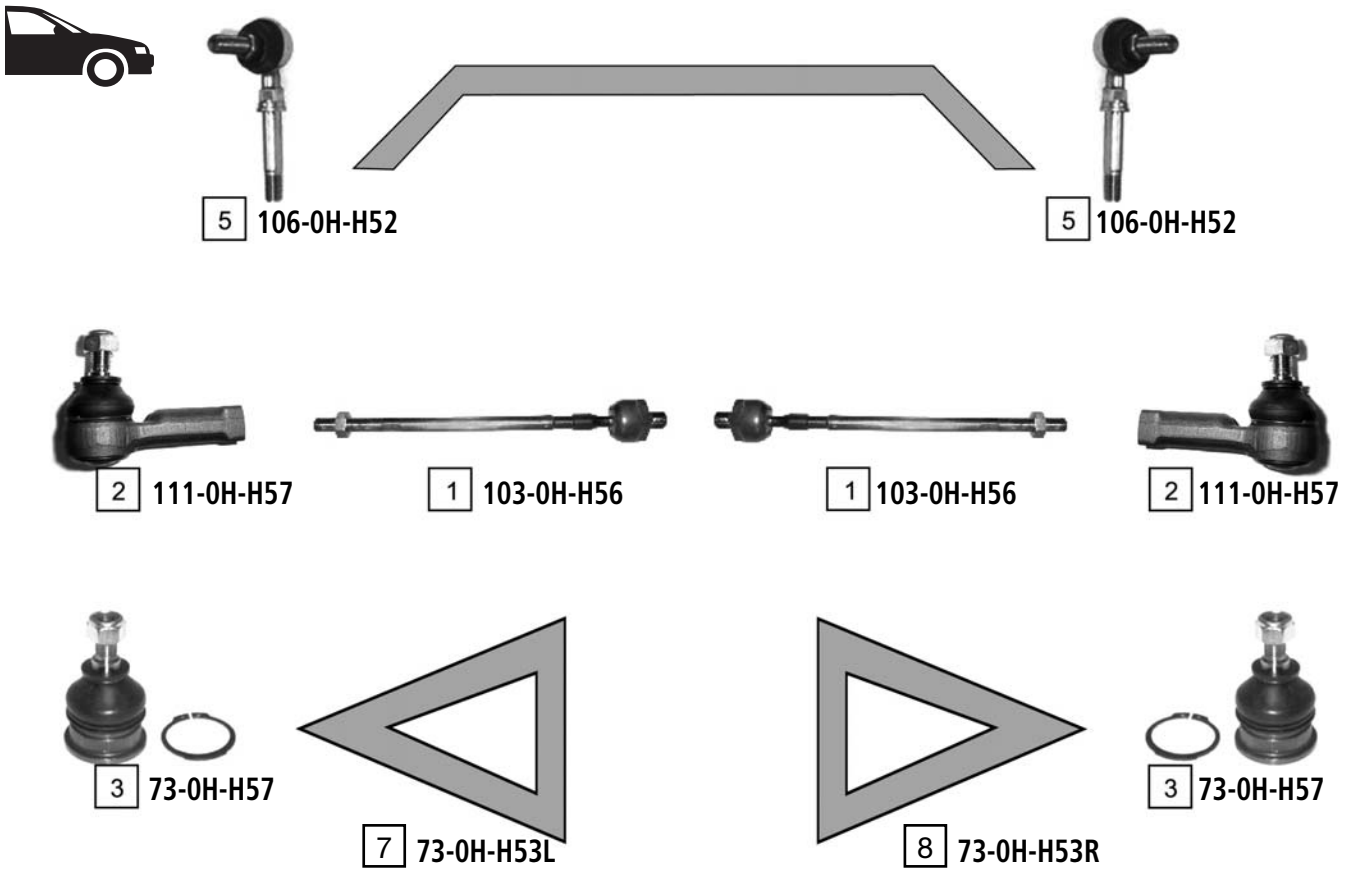

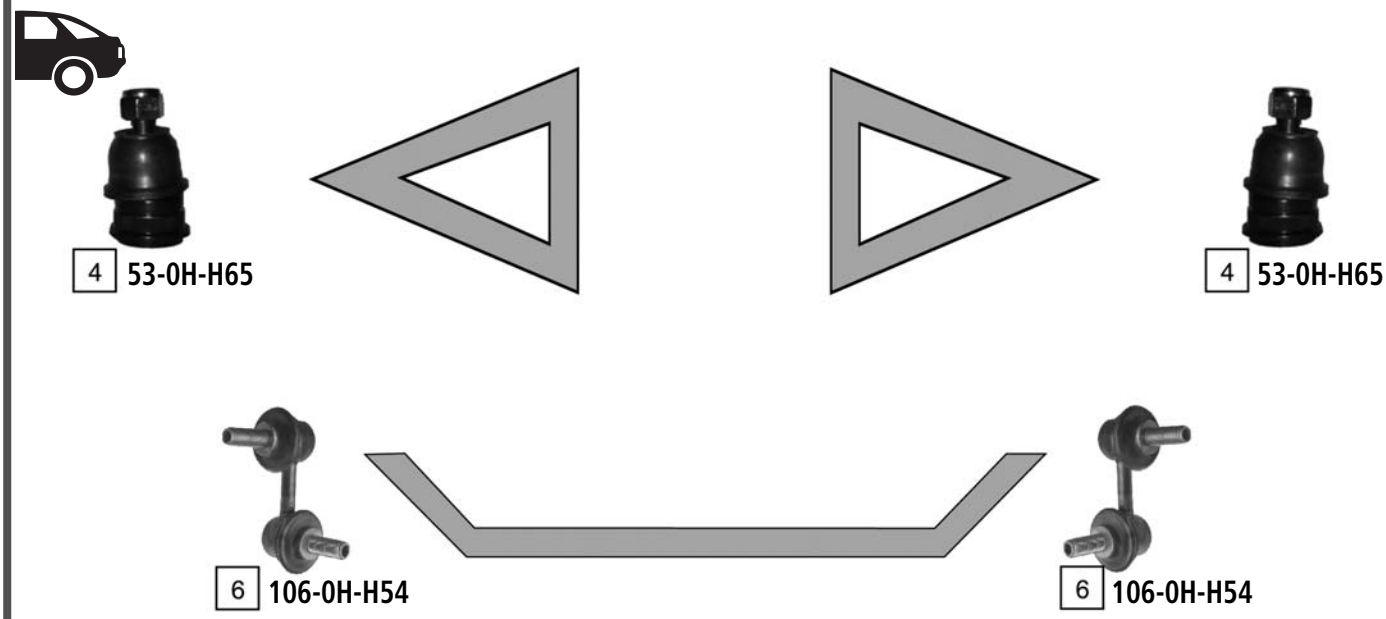

Ref	ASHIKA CODE	Description	OEM	Measures	Ref	ASHIKA CODE	Description	OEM	Measures
1	**103-0H-H56**	Axial Joint	56540 28020	th:MM16X1.5R L:298	5	**106-0H-H52**	Stabiliser Link	54830 36000	-
2	**111-0H-H57**	Tie Rod End	56820-28500	c: 13,6 th: FM14X1.5R	6	**106-0H-H54**	Stabiliser Link	55580-37020	L:60
3	**73-0H-H57**	Ball Joint	54520 31600	c: 15	7	**73-0H-H53L**	Ball Joint		
4	**53-0H-H65**	Ball Joint	55130 34A00	c:16.2	8	**73-0H-H53R**	Ball Joint		

O.E.M. names and numbers are used for reference purposes only Ashika assumes no responsibility for possible errors

SONATA II (Y-3) **05/1993 - 06/1998**

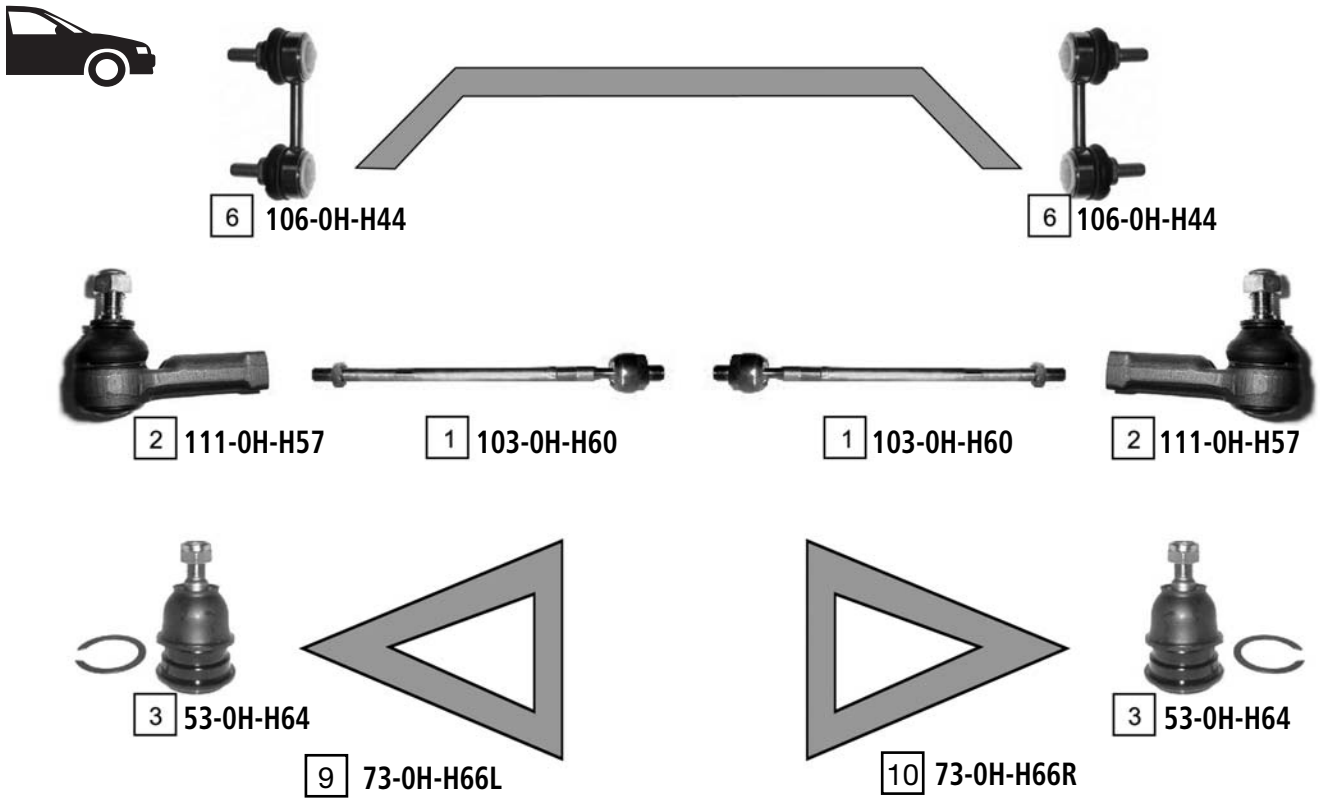

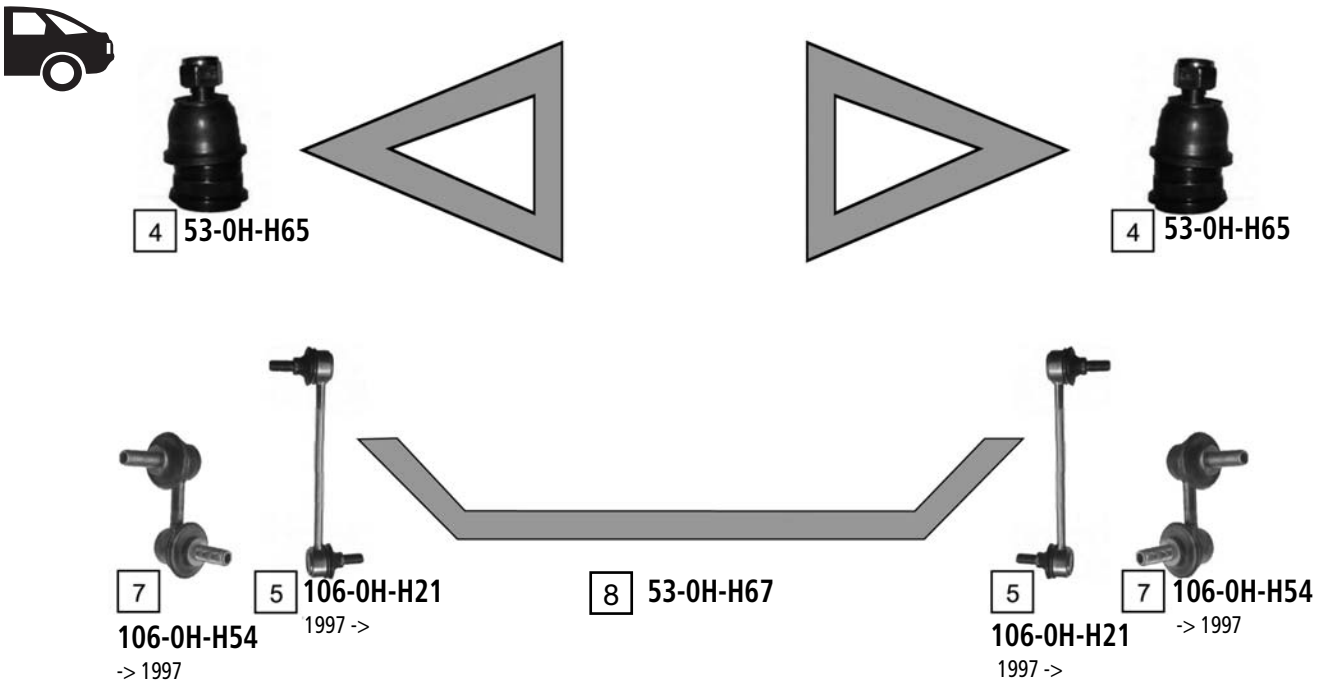

Ref.	ASHIKA CODE	Description	OEM	Measures	Ref	ASHIKA CODE	Description	OEM	Measures
1	**103-0H-H60**	Axial Joint	57716 34000	th:MM16X1.5R L:322	6	**106-0H-H44**	Stabiliser Link	54830 34000	L:52
2	**111-0H-H57**	Tie Rod End	56820-28500	c:13.6 th:FM14X1.5R	7	**106-0H-H54**	Stabiliser Link	55580-37020	L:60
3	**53-0H-H64**	Ball Joint	54503 34A00	c:15	8	**53-0H-H67**	Ball Joint	5520134000	
4	**53-0H-H65**	Ball Joint	55130 34A00	c:16.2	9	**73-0H-H66L**	Ball Joint	5450034000	
5	**106-0H-H21**	Stabiliser Link	55530-38000	L:180	10	**73-0H-H66R**	Ball Joint	5450134000	

SONATA III **03/1998 - 10/2001**

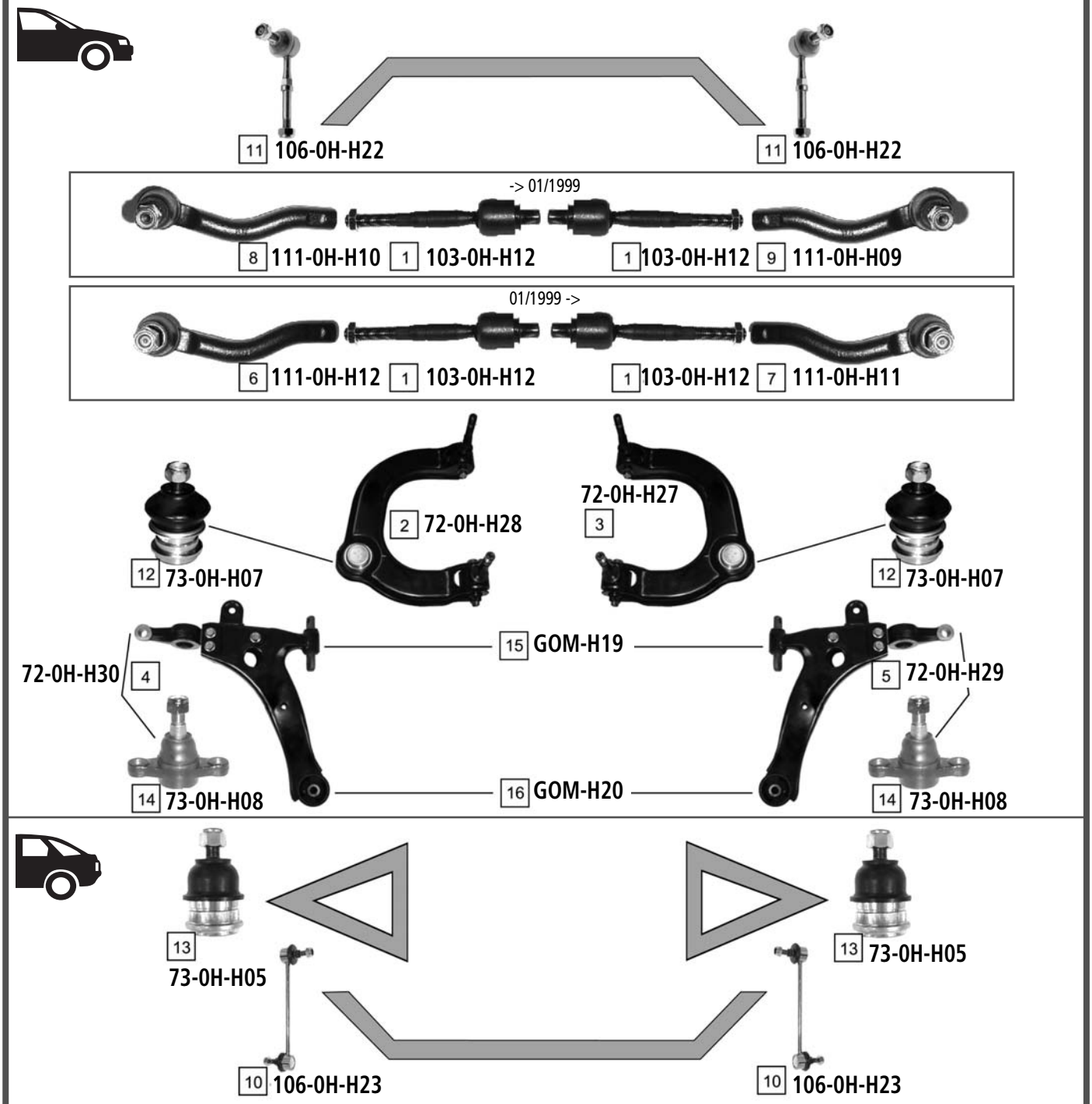

Ref	ASHIKA CODE	Description	OEM	Measures	Ref	ASHIKA CODE	Description	OEM	Measures
1	103-0H-H12	Axial Joint	57724-38000		9	111-0H-H09	Tie Rod End Right	57780-38010	
2	72-0H-H28	TCA	54410-38000	c:13.2	10	106-0H-H23	Stabiliser Link	55530-38600	L:193.5
3	72-0H-H27	TCA	54420-38000	c:13.2	11	106-0H-H22	Stabiliser Link	54830-38100	
4	72-0H-H30	TCA	54500 38000		12	73-0H-H07	Ball Joint	54403 38A00	c:13.4
5	72-0H-H29	TCA	54501 38000		13	73-0H-H05	Ball Joint	54503-38A00	
6	111-0H-H12	Tie Rod End Left	56820-38000	th:FM14X1.5R	14	73-0H-H08	Ball Joint	51760 38000	c:18
7	111-0H-H11	Tie Rod End Right	56820-38900	th:FM14X1.5R	15	GOM-H19	Silentblock For Susp.Arm	54551 38000	
8	111-0H-H10	Tie Rod End Left	57780-38000		16	GOM-H20	Silentblock For Susp.Arm	54584 38000	

O.E.M. names and numbers are used for reference purposes only Ashika assumes no responsibility for possible errors

SONATA IV **10/2001 - 01/2005**

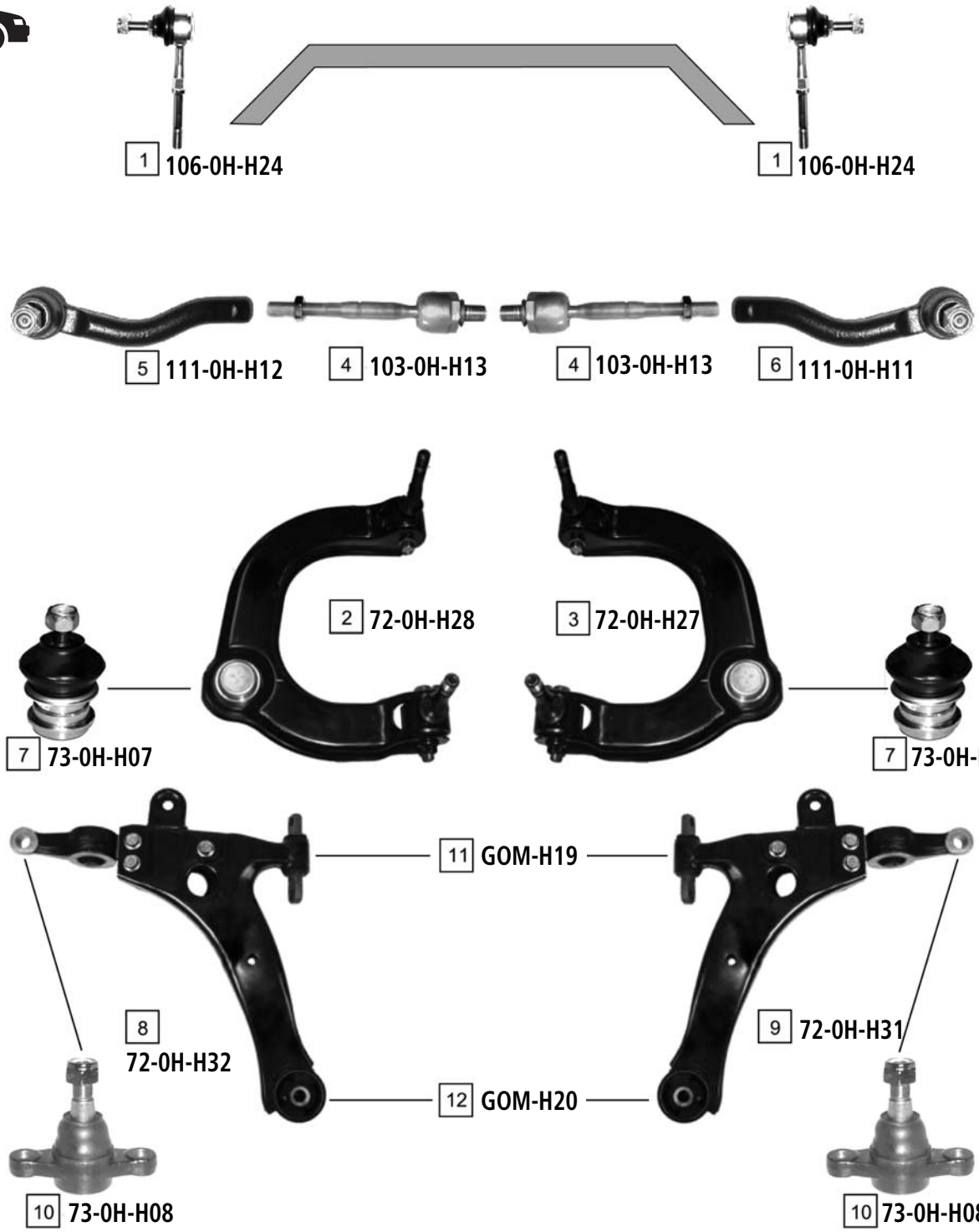

Ref.	ASHIKA CODE	Description	OEM	Measures	Ref	ASHIKA CODE	Description	OEM	Measures
1	**106-0H-H24**	Stabiliser Link	54830-38110		7	**73-0H-H07**	Ball Joint	54403 38A00	c:13.4
2	**72-0H-H28**	TCA	54410-38000	c:13.2	8	**72-0H-H32**	TCA Left	54500-38011	
3	**72-0H-H27**	TCA	54420-38000	c:13.2	9	**72-0H-H31**	TCA Right	54501-38011	
4	**103-0H-H13**	Axial Joint	57724-38010	th:MM16X1.5R L:171	10	**73-0H-H08**	Ball Joint	51760 38000	c:18
5	**111-0H-H12**	Tie Rod End Left	56820-38000	th:FM14X1.5R	11	**GOM-H19**	Silentblock For Susp.Arm	54551 38000	-
6	**111-0H-H11**	Tie Rod End Right	56820-38900	th:FM14X1.5R	12	**GOM-H20**	Silentblock For Susp.Arm	54584 38000	-

SONATA V (NF) **01/2005 ->**

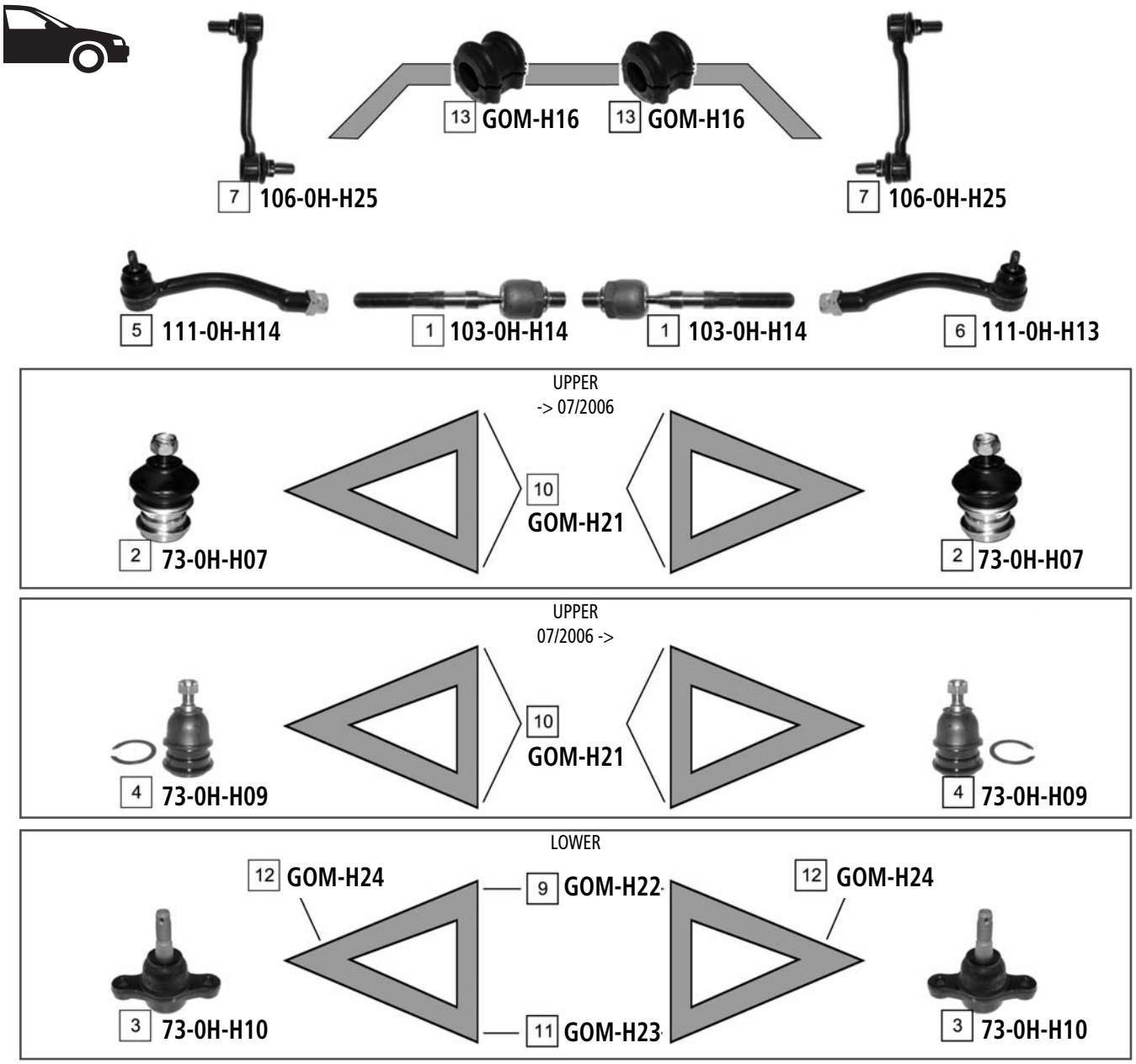

Ref	ASHIKA CODE	Description	OEM	Measures	Ref	ASHIKA CODE	Description	OEM	Measures
1	103-0H-H14	Axial Joint	57724 3K000	th:MM16X1.5R L:178	8	106-0H-H26	Stabiliser Link	55530 3K001	L:80
2	73-0H-H07	Ball Joint	54403 38A00	c:13.4	9	GOM-H22	Silientblock For Susp.Arm	54584 3K000	
3	73-0H-H10	Ball Joint	51760 3K000	c:15.1	10	GOM-H21	Silientblock For Susp.Arm	54443 3K000	
4	73-0H-H09	Ball Joint	54430 3F600	c:13.5	11	GOM-H23	Silientblock For Susp.Arm	54551 3K000	
5	111-0H-H14	Tie Rod End Left	56820 3K000	c:13.4 th:MM16X1.5R	12	GOM-H24	Silientblock For Susp.Arm	54552 3K000	
6	111-0H-H13	Tie Rod End Right	56820 3K010	c:13.4 th:MM16X1.5R	13	GOM-H16	Satbiliser Mounting	54813 3K100	
7	106-0H-H25	Stabiliser Link	54830 3L000	L:150					

O.E.M. names and numbers are used for reference purposes only Ashika assumes no responsibility for possible errors

TERRACAN (HP) **12/2001 ->**

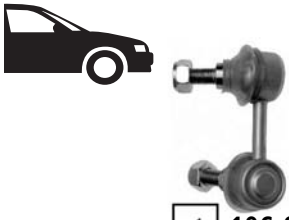

1 106-0H-H28

2 106-0H-H27

6 111-0H-H69

3 105-0H-H01

7 111-0H-H70

7 111-0H-H70

3 105-0H-H01

6 111-0H-H69

4 73-0H-H11

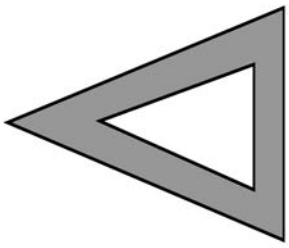

UPPER

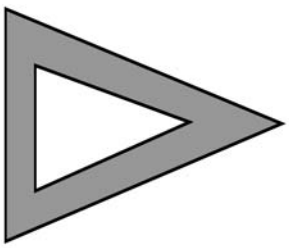

4 73-0H-H11

5 73-0H-H12

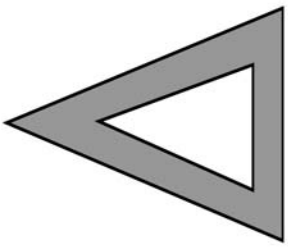

LOWER

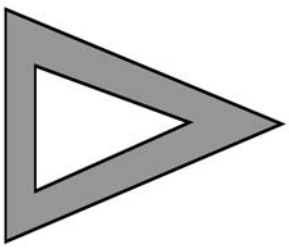

5 73-0H-H12

Ref.	ASHIKA CODE	Description	OEM	Measures	Ref	ASHIKA CODE	Description	OEM	Measures
1	**106-0H-H28**	Stabiliser Link	54822-H1000	L:67	5	**73-0H-H12**	Ball Joint Lower	54550-H1000	
2	**106-0H-H27**	Stabiliser Link	54823-H1000	L:67	6	**111-0H-H69**	Tie Rod End	5B000037	
3	**105-0H-H01**	Tie Rod	56850-H1011		7	**111-0H-H70**	Tie Rod End	5B000036	
4	**73-0H-H11**	Ball Joint UPPER	54440-H1000						

TRAJET (FO) **03/2000 ->**

2 106-0H-H30

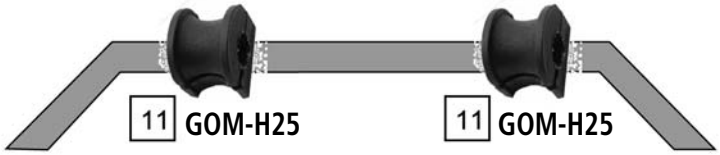

11 GOM-H25

11 GOM-H25

3 106-0H-H29

6 111-0H-H05
RHD

1 103-0H-H15

1 103-0H-H15

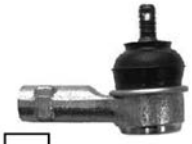

6 111-0H-H05
RHD

7 111-0H-H15
LHD

7 111-0H-H15
LHD

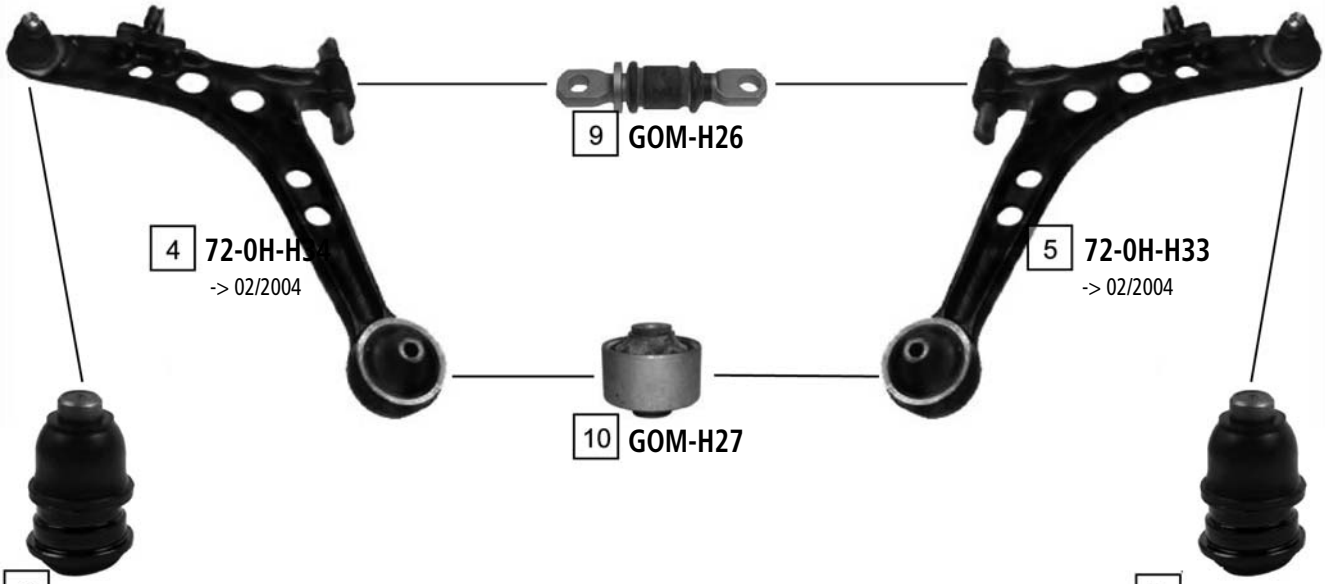

9 GOM-H26

4 72-0H-H34
-> 02/2004

5 72-0H-H33
-> 02/2004

10 GOM-H27

8 73-0H-H13
-> 02/2004

8 73-0H-H13
-> 02/2004

Ref.	ASHIKA CODE	Description	OEM	Measures	Ref	ASHIKA CODE	Description	OEM	Measures
1	**103-0H-H15**	Axial Jpint	57724 3A000	th: MM16X1.5R L:295	7	**111-0H-H15**	Tie Rod End	57780-3B000	
2	**106-0H-H30**	Stabiliser Link	54830 3A000	L:60	8	**73-0H-H13**	Ball Joint	54530 3B000	c: 19.9
3	**106-0H-H29**	Stabiliser Link	54840 3A000	L:60	9	**GOM-H26**	Silentblock For Susp. Arm	54551 3A000	
4	**72-0H-H34**	TCA Left Wbj	54501 3A100		10	**GOM-H27**	Silentblock For Susp. Arm	54555 3A100	
5	**72-0H-H33**	TCA Right Wbj	54502 3A100		11	**GOM-H25**	Stabiliser Mounting	54813-3A000	
6	**111-0H-H05**	Tie Rod End	56820-3B000	c: 13.4 th: FM14X1.5R					

O.E.M. names and numbers are used for reference purposes only Ashika assumes no responsibility for possible errors

TUCSON **09/2004 ->**

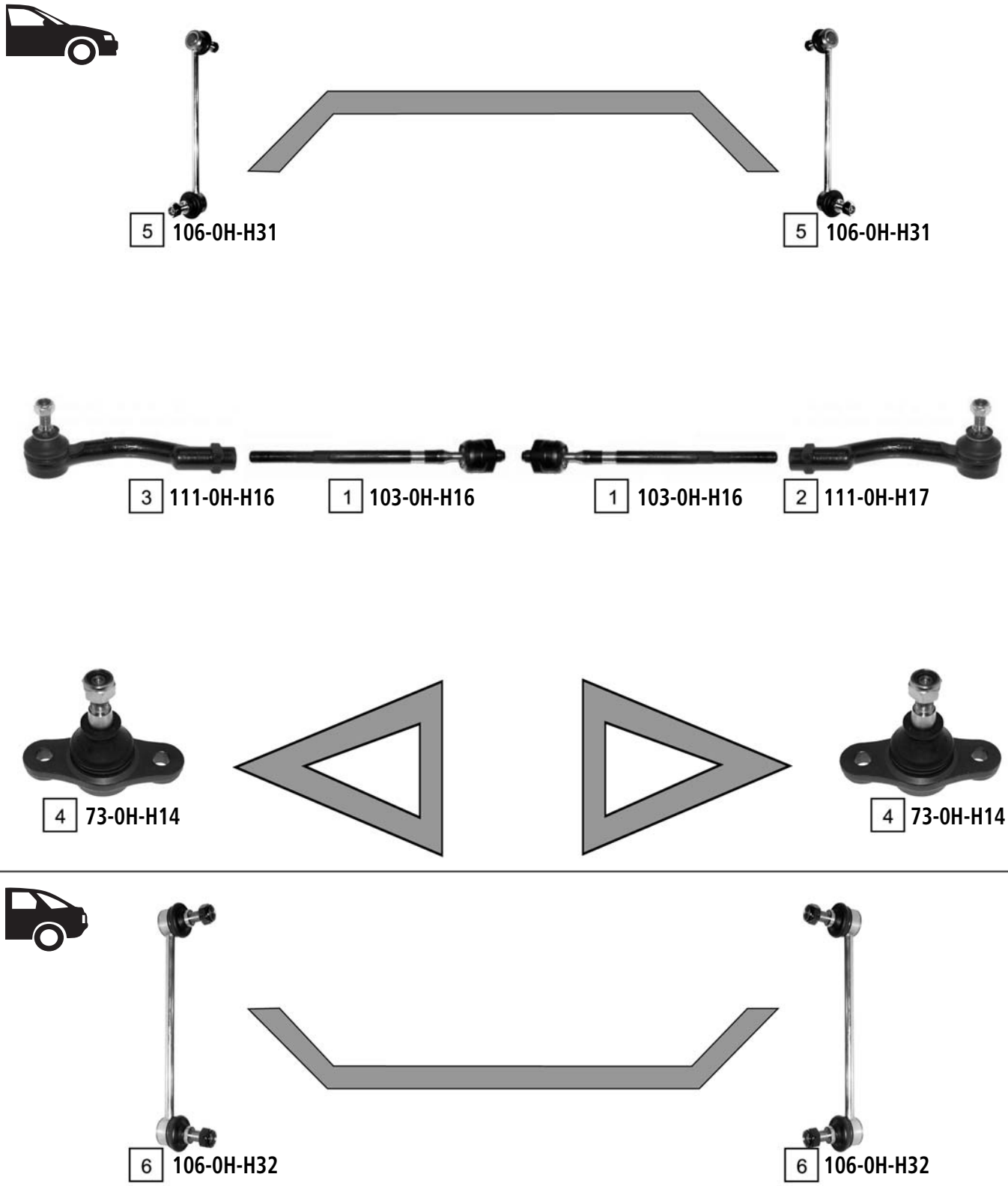

Ref.	ASHIKA CODE	Description	OEM	Measures	Ref	ASHIKA CODE	Description	OEM	Measures
1	**103-0H-H16**	Axial Joint	57724 2E000	th: MM16X1.5R L:243	4	**73-0H-H14**	Ball Joint	51760 2E000	c: 14.5
2	**111-0H-H17**	Tie Rod End Left	56820 2E000	c: 13.3 th: FM10X1.5R	5	**106-0H-H31**	Stabiliser Link	54830 2E000	L:238
3	**111-0H-H16**	Tie Rod End Rght	56820 2E900	c: 13.3 th: FM10X1.5R	6	**106-0H-H32**	Stabiliser Link	55530 2E000	L:220

XG (25 - 30) 04/1999 ->

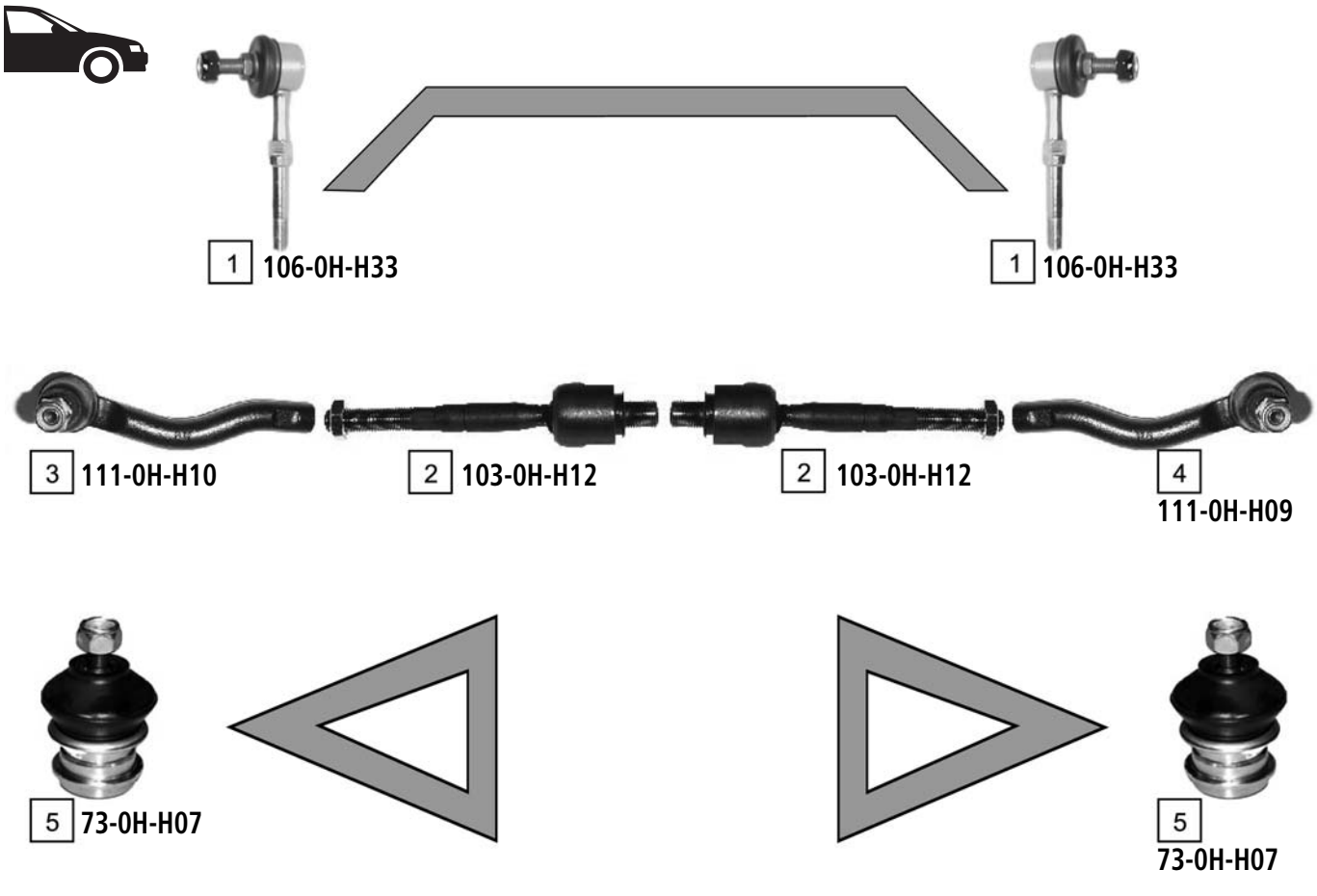

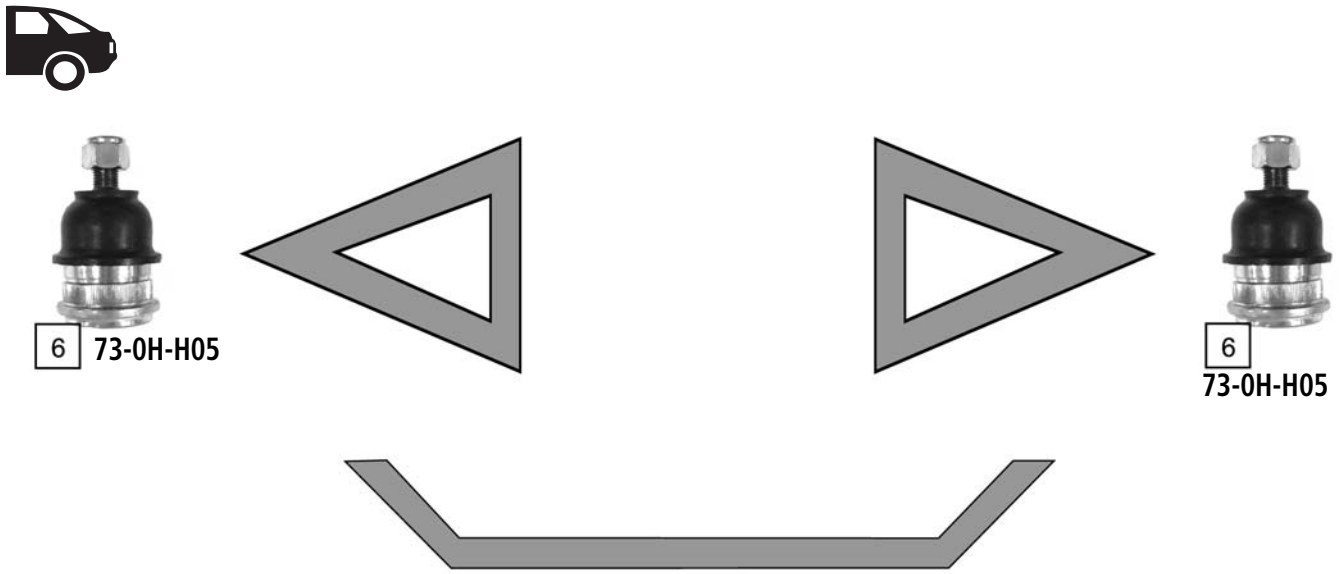

Ref	ASHIKA CODE	Description	OEM	Measures	Ref	ASHIKA CODE	Description	OEM	Measures
1	**106-0H-H33**	Stabiliser Link	54830-39000		4	**111-0H-H09**	Tie Rod End Right	57780-38010	
2	**103-0H-H12**	Axial Joint	57724-38000		5	**73-0H-H07**	Ball Joint	54403 38A00	c:13.4
3	**111-0H-H10**	Tie Rod End Left	57780-38000		6	**73-0H-H05**	Ball Joint	54503-38A00	

O.E.M. names and numbers are used for reference purposes only Ashika assumes no responsibility for possible errors

CAMPO (KB) **01/1983 - 12/1990**

2 **111-09-998**

1 **103-09-900**

1 **103-09-900**

3 **111-09-999**

4 **73-09-914**

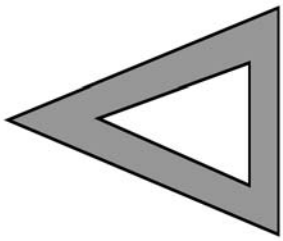

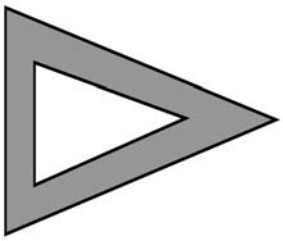

4 **73-09-914**

5 **73-09-999**

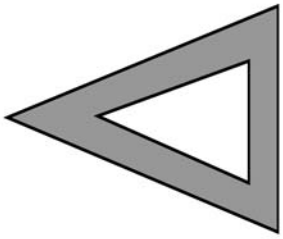

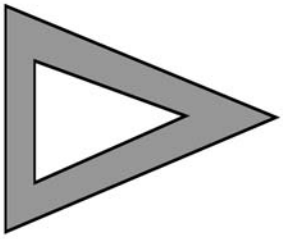

5 **73-09-999**

Ref.	ASHIKA CODE	Description	OEM	Measures	Ref	ASHIKA CODE	Description	OEM	Measures
1	**103-09-900**	Axial Joint	8-94217-221-3	th:FM14X1.5R L:267	4	**73-09-914**	Ball Joint UPPER	310 828	c:17.5
2	**111-09-998**	Tie Rod End Left	324 058	c:16 th:FM14X1.5L	5	**73-09-999**	Ball Joint UPPER	8-94224-550-2	c:17.4
3	**111-09-999**	Tie Rod End Right	324 057	c:16 th:FM14X1.5R					

D-MAX 2002 ->

5 106-09-908
4WD

6 106-09-909
4WD

1 111-09-915 2 103-09-902

2 103-09-902 1 111-09-915

7 73-09-917
4WD

7 73-09-917
4WD

3 73-09-906
4x2

3 73-09-906
4x2

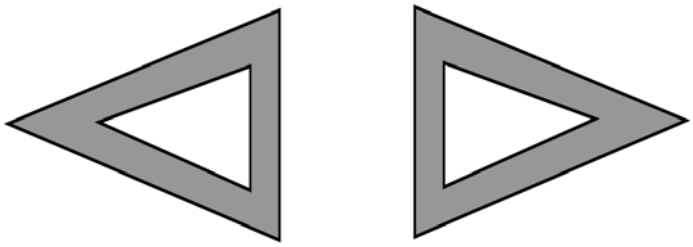

4 73-09-913
4x2

4 73-09-913
4x2

Ref.	ASHIKA CODE	Description	OEM	Measures	Ref	ASHIKA CODE	Description	OEM	Measures
1	111-09-915	Tie Rod End	8-973048550		5	106-09-908	Stabiliser Link	8-97235-787-0	
2	103-09-902	Axial Joint	8-973048510		6	106-09-909	Stabiliser Link	8-97235-786-1	
3	73-09-906	Ball Joint	8-972357770		7	73-09-917	Ball Joint	8-94374-424-0	
4	73-09-913	Ball Joint	8-944521020						

O.E.M. names and numbers are used for reference purposes only Ashika assumes no responsibility for possible errors

PICK-UP FASTER **06/1981 - 01/1998**

1 **111-09-904**

2 **103-09-900**

2 **103-09-900**

1 **111-09-904**

UPPER

3 **73-09-999**

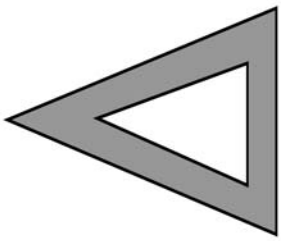

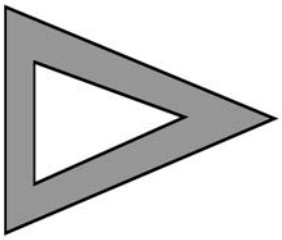

3 **73-09-999**

LOWER

4 **53-09-906**

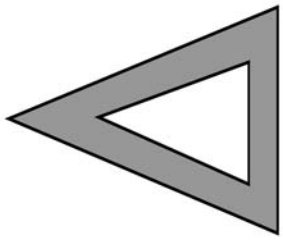

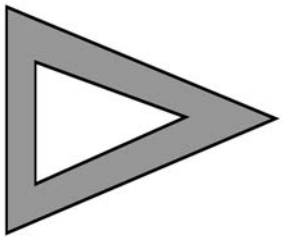

4 **53-09-906**

LOWER 4X4

5 **53-09-908L**

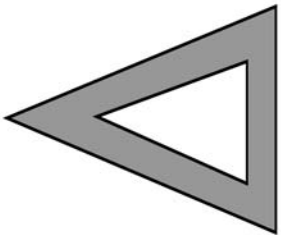

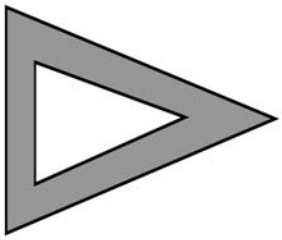

6 **53-09-908R**

Ref	ASHIKA CODE	Description	OEM	Measures	Ref	ASHIKA CODE	Description	OEM	Measures
1	**111-09-904**	Tie Rod End	8-94237-351-1	c:13.2 th:FM14X1.5R	4	**53-09-906**	Ball Joint	8-94224-552-2	c:17.6
2	**103-09-900**	Axial Joint	8-94217-221-3	th:FM14X1.5R L:267	5	**53-09-908L**	Ball Joint Lower	94109704	c:17.6
3	**73-09-999**	Ball Joint UPPER	8-94224-550-2	c:17.4	6	**53-09-908R**	Ball Joint Lower	8-94452-106-1	

O.E.M. names and numbers are used for reference purposes only Ashika assumes no responsibility for possible errors

PICK-UP FASTER **05/1988 - 12/1990**

2 **111-09-998**

3 **111-09-999**

UPPER

1 **73-09-914**

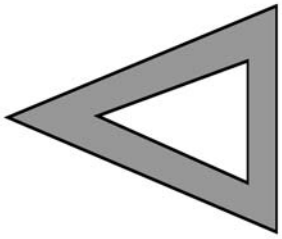

6 **GOM-914**

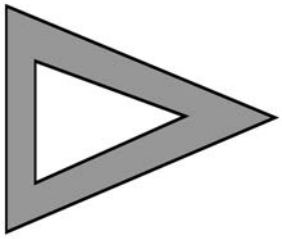

1 **73-09-914**

LOWER

TFR

4 **73-09-915**

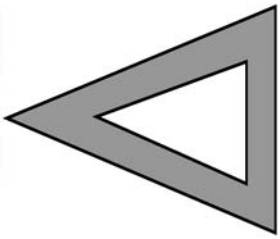

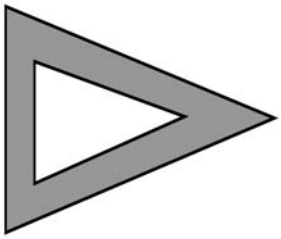

4 **73-09-915**

TFS

5 **73-09-913**

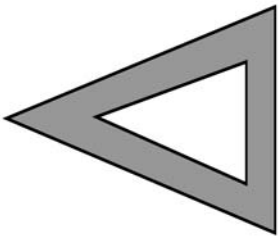

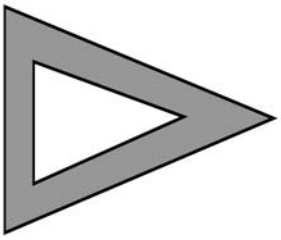

5 **73-09-913**

Ref.	ASHIKA CODE	Description	OEM	Measures	Ref	ASHIKA CODE	Description	OEM	Measures
1	**73-09-914**	Ball Joint UPPER	310 828	c:17.5	4	**73-09-915**	Ball Joint UPPER	8 94459 464 1	c:20.5
2	**111-09-998**	Tie Rod End Left	324 058	c:16 th:FM14X1.5L	5	**73-09-913**	Ball Joint UPPER	8-94452-102-1	c:20.5
3	**111-09-999**	Tie Rod End Right	324 057	c:16 th:FM14X1.5R	6	**GOM-914**	Silentblock For Susp.Arm	8-94226-557-0	

O.E.M. names and numbers are used for reference purposes only Ashika assumes no responsibility for possible errors

TROOPER (UBS)
BIGHORN

10/1987 - 12/1991

1 **111-09-998**

8 **103-09-999**

8 **103-09-999**

2 **111-09-999**

UPPER
-> 11/1991

3 **73-09-999**

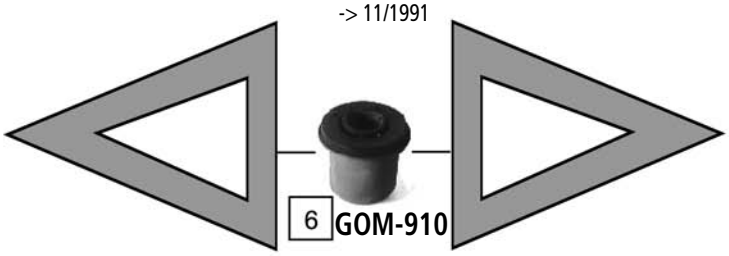

6 **GOM-910**

3 **73-09-999**

UPPER
12/1991 ->

5 **73-09-917**

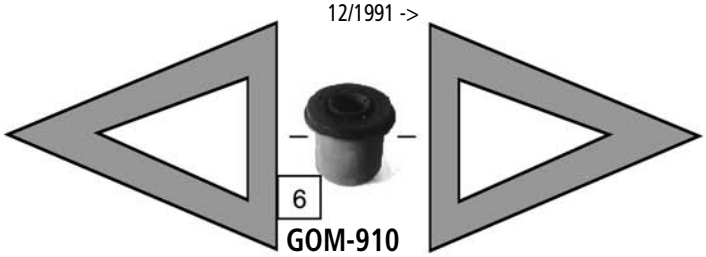

6 **GOM-910**

5 **73-09-917**

LOWER

4 **73-09-913**

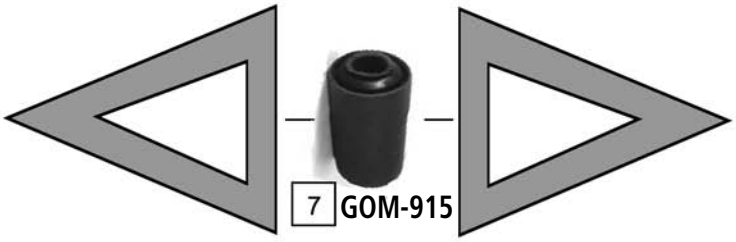

7 **GOM-915**

4 **73-09-913**

Ref	ASHIKA CODE	Description	OEM	Measures	Ref	ASHIKA CODE	Description	OEM	Measures
1	**111-09-998**	Tie Rod End Left	324 058	c:16 th:FM14X1.5L	5	**73-09-917**	Ball Joint	8-94374424-0	c:17.6
2	**111-09-999**	Tie Rod End Right	324 057	c:16 th:FM14X1.5R	6	**GOM-910**	Silentblock For Susp.Arm	8-94408-840-3	d:38.2
3	**73-09-999**	Ball Joint UPPER	8-94224-550-2	c:17.4	7	**GOM-915**	Silentblock For Susp.Arm	8-94408-842-0	d:44.6
4	**73-09-913**	Ball Joint UPPER	8-94452-102-1	c:20.5	8	**103-09-999**	Axial Joint	5-44352095-2	

O.E.M. names and numbers are used for reference purposes only Ashika assumes no responsibility for possible errors

TROOPER (UB)
BIGHORN

08/1991 - 07/1998

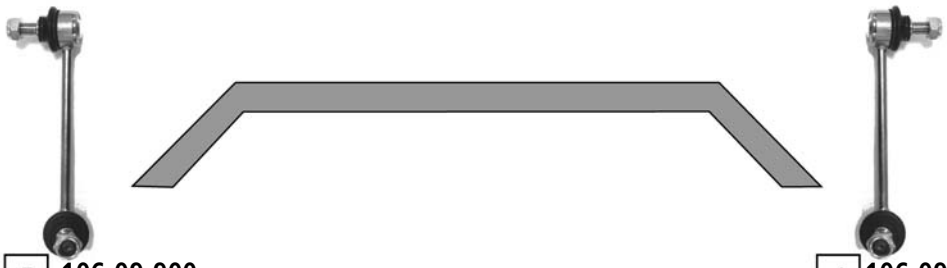

5 **106-09-900**

4 **106-09-901**

1 **111-09-998**

2 **111-09-999**

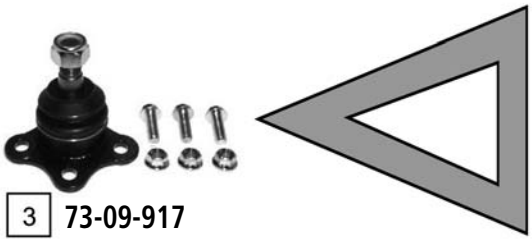

3 **73-09-917**

UPPER

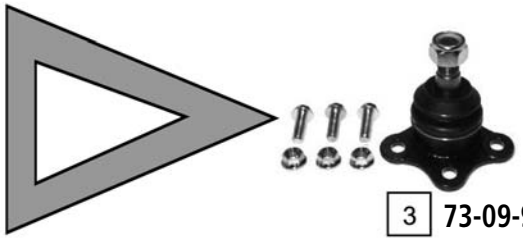

3 **73-09-917**

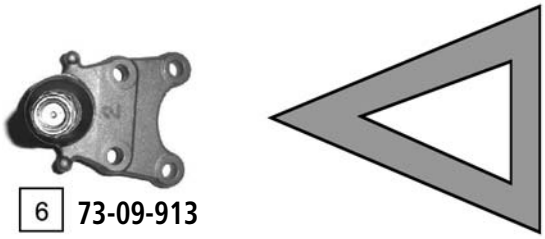

6 **73-09-913**

LOWER

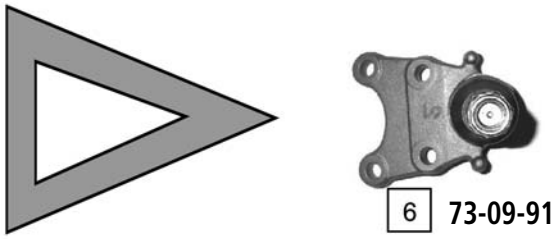

6 **73-09-913**

Ref.	ASHIKA CODE	Description	OEM	Measures	Ref	ASHIKA CODE	Description	OEM	Measures
1	**111-09-998**	Tie Rod End Left	324 058	c:16 th:FM14X1.5L	4	**106-09-901**	Stabiliser Link Left	8-97018228-2	L:148
2	**111-09-999**	Tie Rod End Right	324 057	c:16 th:FM14X1.5R	5	**106-09-900**	Stabiliser Link Right	8-97018227-2	
3	**73-09-917**	Ball Joint	8-94374424-0	c:17.6	6	**73-09-913**	Ball Joint Upper	8-94452-102-1	c:20.5

O.E.M. names and numbers are used for reference purposes only Ashika assumes no responsibility for possible errors

4.0I - 2.1TD
CHREOKEE (XJ)

10/1984 - 09/2001

10 **106-09-902**
-> 05/1991

11 **106-09-903**
05/1991 ->

10 **106-09-902**
-> 05/1991

11 **106-09-903**
05/1991 ->

4 **111-00-J004**

5 **111-00-J003**

3 **111-00-J010**

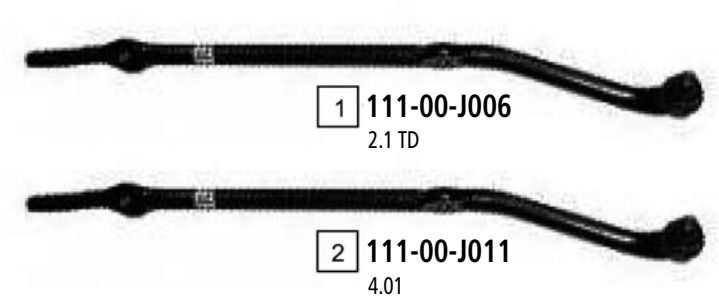

1 **111-00-J006**
2.1 TD

2 **111-00-J011**
4.01

UPPER

8 **111-00-J001**
-> 2000

6 **111-00-J007**

6 **111-00-J007**

8 **111-00-J001**
-> 2000

LOWER

9 **111-00-J002**
-> 2000

7 **111-OJ-J013**

7 **111-OJ-J013**

9 **111-00-J002**
-> 2000

Ref	ASHIKA CODE	Description	OEM	Measures	Ref	ASHIKA CODE	Description	OEM	Measures
1	111-00-J006	Tie Rod	52005738		7	111-OJ-J013	TCA	52001162	
2	111-00-J011	Tie Rod	52006592		8	111-00-J001	Ball Joint	83500 202	c:15.8
3	111-00-J010	Tie Rod End	52005739	c:14.2 th:MM22X1.5L	9	111-00-J002	Ball Joint	83500 202	c:18.4
4	111-00-J004	Tie Rod End	52005741		10	106-09-902	Stabiliser Link	52037 849	
5	111-00-J003	Tie Rod End	52005740		11	106-09-903	Stabiliser Link	52003 360	
6	111-00-J007	TCA	52087711						

GRAND CHEROKEE I (ZJ / ZG) **01/1991 - 04/1999**

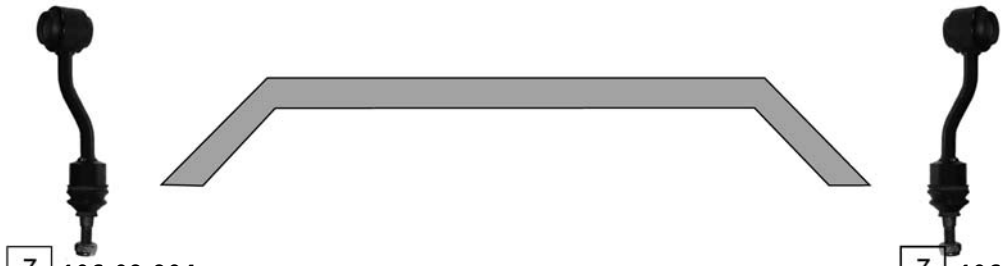

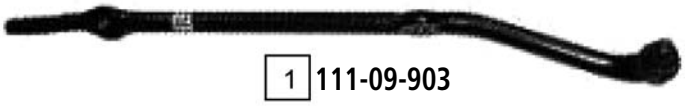

UPPER

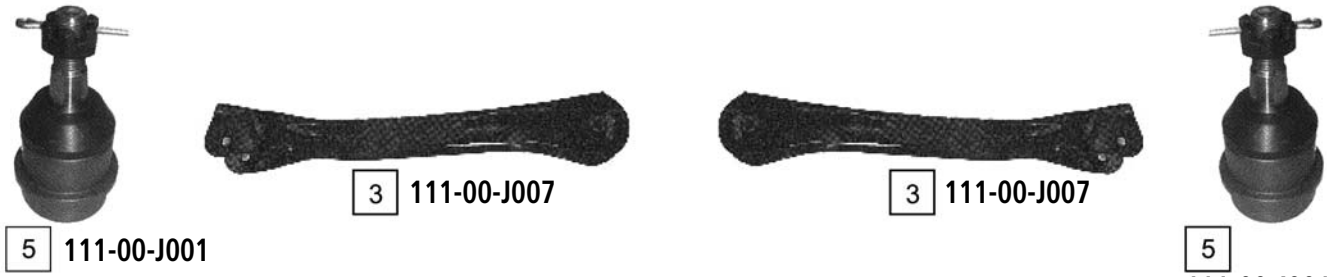

LOWER

Ref.	ASHIKA CODE	Description	OEM	Measures	Ref	ASHIKA CODE	Description	OEM	Measures
1	111-09-903	Tie Rod	52037994		5	111-00-J001	Ball Joint	83500 202	c:15.8
2	111-00-J010	Tie Rod End	52005739	c:14.2 th:MM22X1.5L	6	111-00-J002	Ball Joint	83500 202	c:18.4
3	111-00-J007	TCA	52087711		7	106-09-904	Stabiliser Link	52088437	
4	111-00-J000	TCA	52088312						

O.E.M. names and numbers are used for reference purposes only Ashika assumes no responsibility for possible errors

GRAND CHEROKEE II (WJ/WG) 01/1999 - 06/2005

5 106-09-905

5 106-09-905

UPPER

1 111-09-908

2 111-09-907

LOWER

3 111-09-910

4 111-09-909

UPPER

8 73-09-900

6 111-OJ-J014

6 111-OJ-J014

8 73-09-900

LOWER

9 73-09-902

7 111-OJ-J012

7 111-OJ-J012

9 73-09-902

Ref	ASHIKA CODE	Description	OEM	Measures	Ref	ASHIKA CODE	Description	OEM	Measures
1	111-09-908	Tie Rod End Left	52088 511	c:14.3 th:MM24X1.5L	6	111-OJ-J014	TCA	52088208-AC	
2	111-09-907	Tie Rod End Right	52088 461	c:14.3 th:MM24x1.5R	7	111-OJ-J012	TCA	52088217-AB	
3	111-09-910	Tie Rod End Left	52088 869AA	c:14.3 th:MM24X1.5L	8	73-09-900	Ball Joint	5012 432AA	c:16
4	111-09-909	Tie Rod End Right	52088 870AA	c:14.3 th:MM24X1.5R	9	73-09-902	Ball Joint	5012 432AA	c:17.7
5	106-09-905	Stabiliser Link	52088 283						

GRAND CHEROKEE III (W2) **06/2005 ->**

1 111-09-914

2 111-09-913

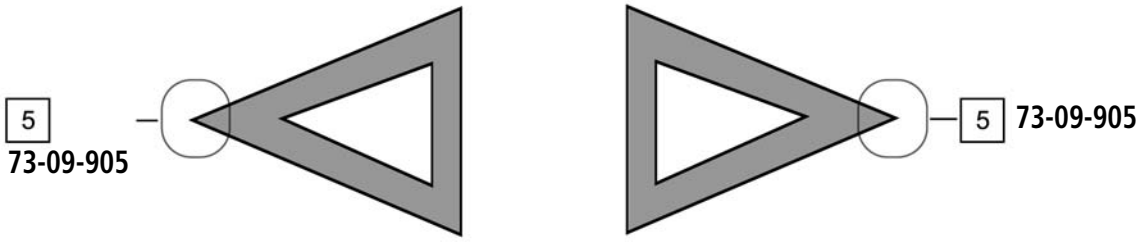

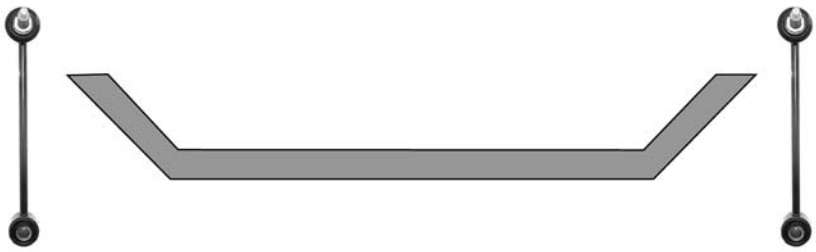

Ref.	ASHIKA CODE	Description	OEM	Measures	Ref	ASHIKA CODE	Description	OEM	Measures
1	**111-09-914**	Tie Rod End Left	5143 555AB	c:15	4	**106-09-907**	Stabiliser Link	5289 486AC	
2	**111-09-913**	Tie Rod End Right	5143 556AB		5	**73-09-905**	Ball Joint	5135 651AB	
3	**106-09-906**	Stabiliser Link	52089 467AB						

O.E.M. names and numbers are used for reference purposes only Ashika assumes no responsibility for possible errors

CARENS I (FC) **11/2000 - 07/2002**

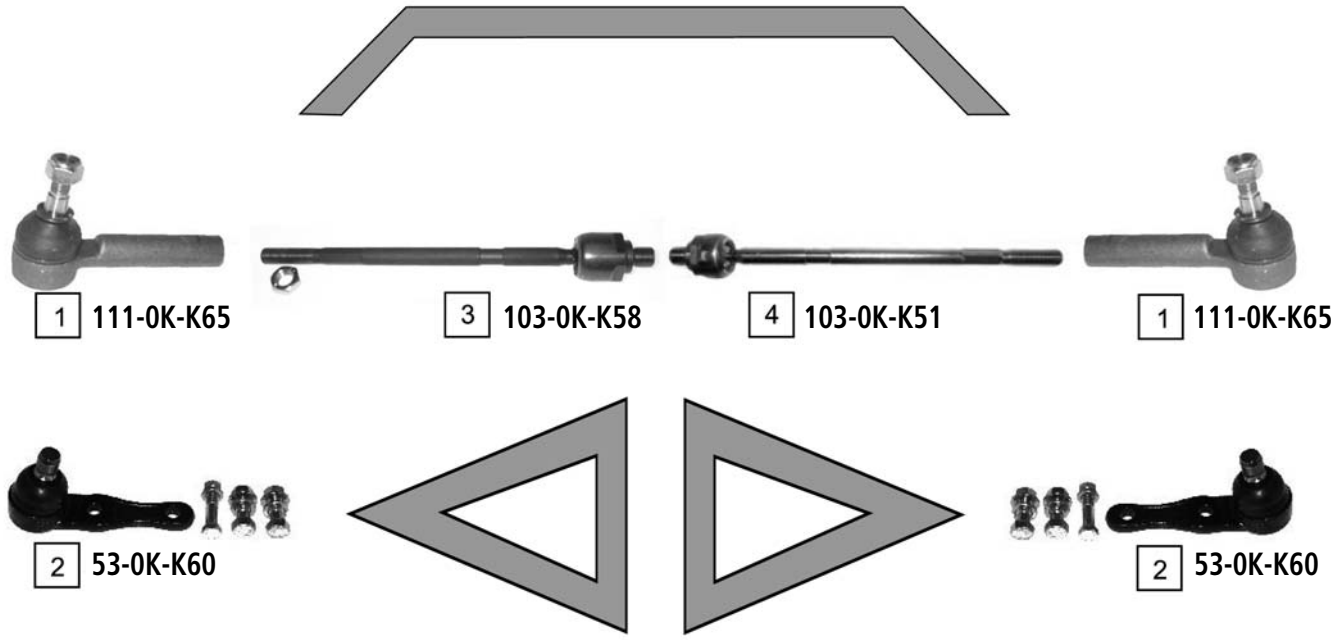

Ref	ASHIKA CODE	Description	OEM	Measures	Ref	ASHIKA CODE	Description	OEM	Measures
1	**111-0K-K65**	Tie Rod End	0K201 32280	c:13 th:FM14X1.5R	3	**103-0K-K58**	Axial Joint	0K2A1 32240	th:MM16X1.5R L:282
2	**53-0K-K60**	Ball Joint	0K2A1 34550A	c:18	4	**103-0K-K51**	Axial Joint	OK2A2 32240	

CARENS II (FJ) **07/2002 - 09/2006**

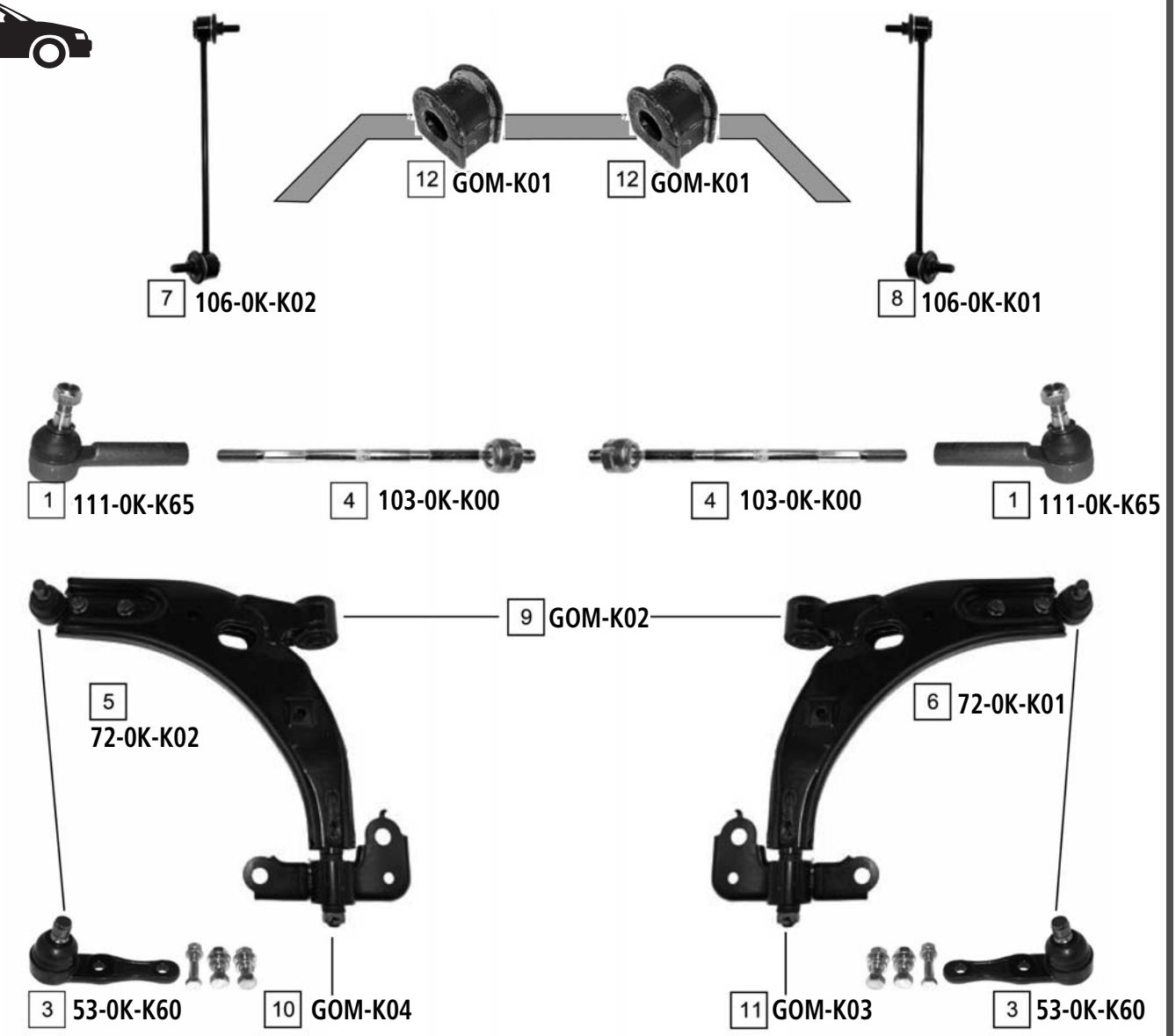

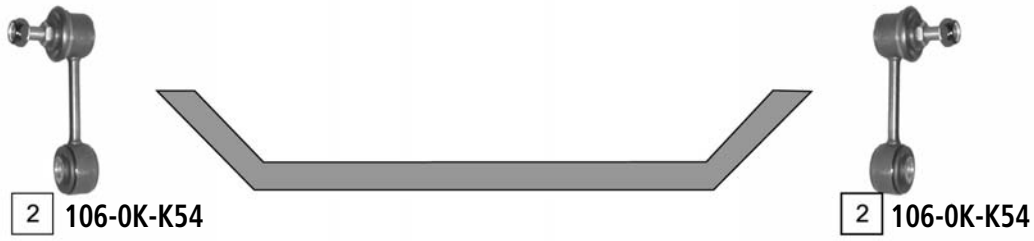

Ref.	ASHIKA CODE	Description	OEM	Measures	Ref	ASHIKA CODE	Description	OEM	Measures
1	**111-0K-K65**	Tie Rod End	OK201 32280	c:13 th:FM14X1.5R	7	**106-0K-K02**	Stabiliser Link Left	0K2FA 34170	L:280
2	**106-0K-K54**	Stabiliser Link	0K2A1 34150B	L:89	8	**106-0K-KO1**	Stabiliser Link Right	0K2FA 34150	L:280
3	**53-0K-K60**	Ball Joint	OK2A1 34550A	c:18	9	**GOM-K02**	Silentblock For Susp.Arm	OK2C034460	
4	**103-0K-K100**	Axual Joint	0K2FK 32240	th:MM16X1.5R L:304	10	**GOM-K04**	Silentblock For Susp.Arm	OK2A1 3446Y	
5	**72-0K-K02**	TCA Left	0K2FA 34350	c:18	11	**GOM-K03**	Silentblock For Susp.Arm	OK2A1 3446X	
6	**72-0K-K01**	TCA Right	0K2FA 34340	c:18	12	**GOM-K01**	Stabiliser Mounting	0K2KB 34156A	d:20

O.E.M. names and numbers are used for reference purposes only Ashika assumes no responsibility for possible errors

CARENS III 10/2006 ->

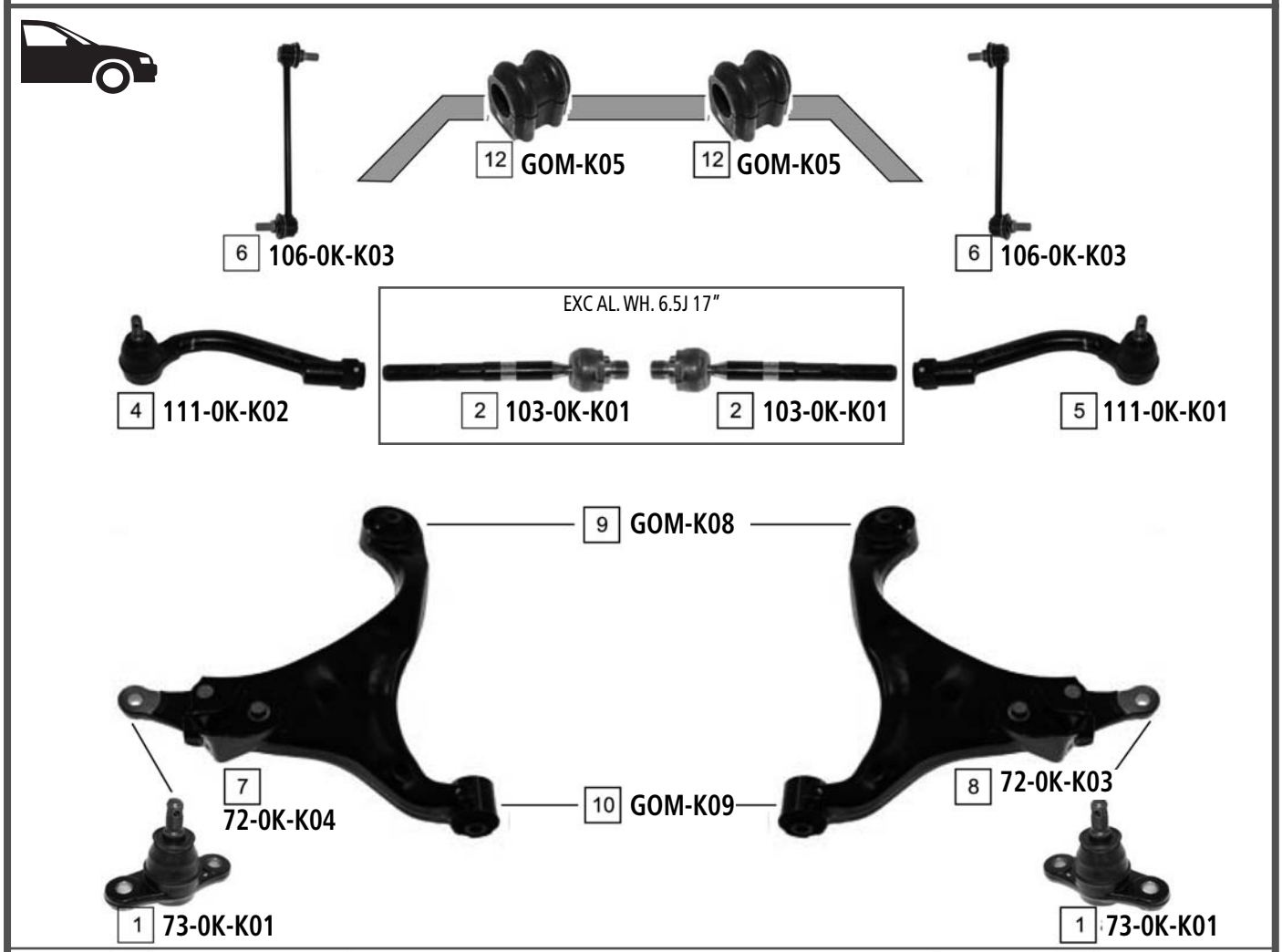

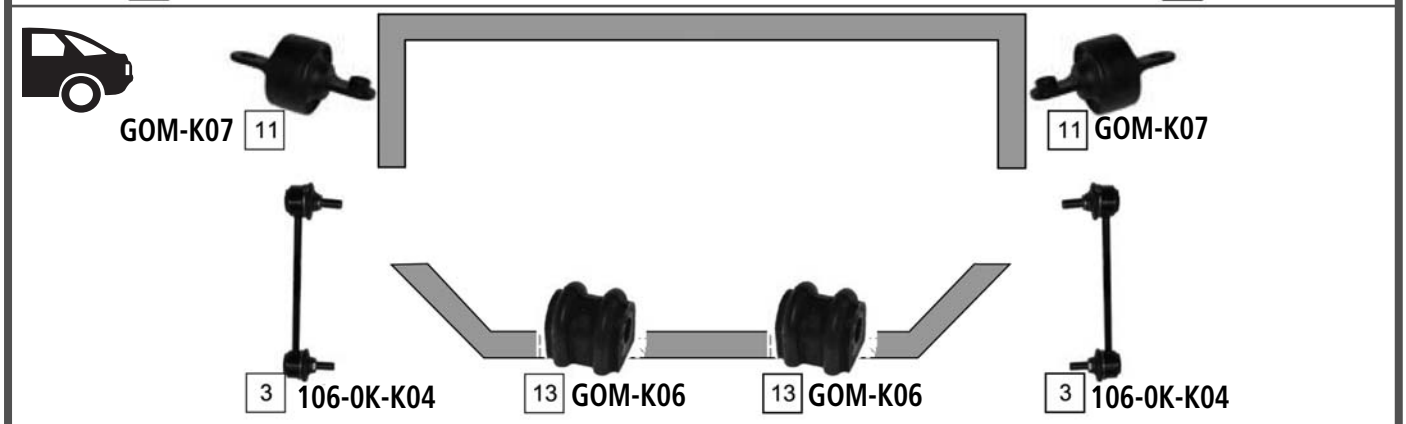

Ref	ASHIKA CODE	Description	OEM	Measures	Ref	ASHIKA CODE	Description	OEM	Measures
1	73-0K-K01	Ball Joint	51760 2G000	c:15	8	72-0K-K03	TCA Right Wobj	54501 1D000	-
2	103-0K-K01	Axial Joint	57724 2G000	th:MM18X1.5R L:199	9	GOM-K08	Silentblock For Susp.Arm	54584 1D000	d:14.3
3	106-0K-K04	Stabiliser Link	55530 1D000	L:180	10	GOM-K09	Silentblock For Susp.Arm	54551 1D000	d:12.2
4	111-0K-K02	Tie Rod End Left	56820 2G000	c:13.4 th:MM16X1.5R	11	GOM-K07	Silentblock For Susp.Arm	55543 2G000	-
5	111-0K-K01	Tie Rod End Right	56820 2G900	c:13.4 th:MM16X1.5R	12	GOM-K05	Stabiliser Mounting	54813 1H100	d:23.4
6	106-0K-K03	Stabiliser Link	54830 2G000	L:241	13	GOM-K06	Stabiliser Mounting	55513 2G000	d:14
7	72-0K-K04	TCA Left Wobj	54500 1D000	-					

CARNIVAL - SEDONA (UP) **08/1999 - 11/2005**

7 **106-0K-K58** 7 **106-0K-K58**

3 **111-0K-K94** 1 **111-0K-K95** 2 **111-0K-K96** 4 **111-0K-K93**

5 **26-0K-K55L** 6 **26-0K-K55R**

Ref.	ASHIKA CODE	Description	OEM	Measures	Ref	ASHIKA CODE	Description	OEM	Measures
1	**111-0K-K95**	Axial Joint	0K522 32270	th:MM17X1R L:246	5	**26-0K-K55L**	TCA Left	0K552 34350B	c:21.9
2	**111-0K-K96**	Axial Joint	0K522 32250	th:MM17X1R L:308	6	**26-0K-K55R**	TCA Right	0K552 34300B	c:21.9
3	**111-0K-K94**	Tie Rod End Left	0K552 32240		7	**106-0K-K58**	Stabiliser Link	0K552 34151B	L:64
4	**111-0K-K93**	Tie Rod End Right	0K552 32280						

O.E.M. names and numbers are used for reference purposes only Ashika assumes no responsibility for possible errors

CARNIVAL III **04/2006 ->**

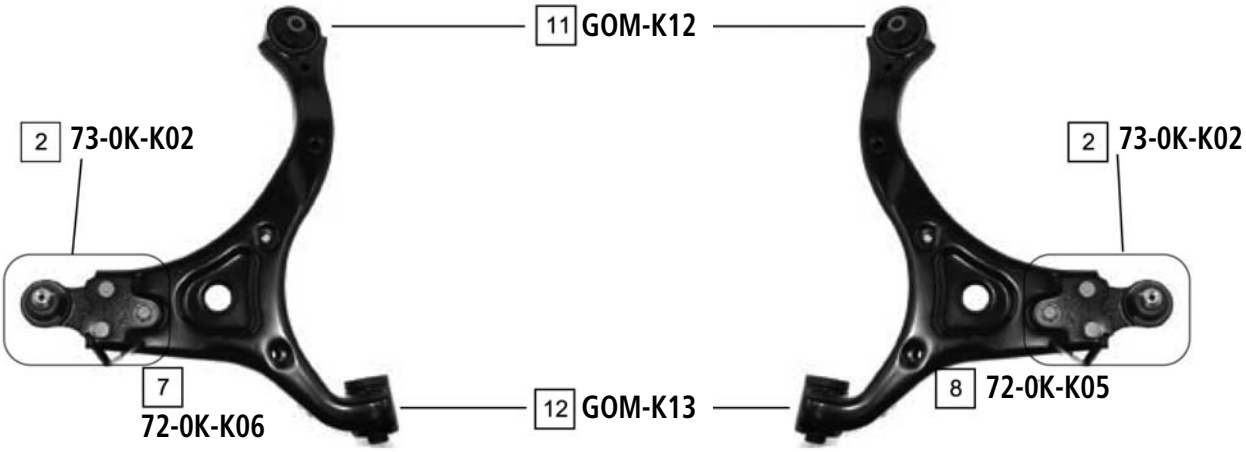

Ref	ASHIKA CODE	Description	OEM	Measures	Ref	ASHIKA CODE	Description	OEM	Measures
1	GOM-K11	Ball Joint	55130 4D000	-	8	72-0K-K05	TCA Right Wbj	54501 4D001	c:20
2	73-0K-K02	Ball Joint	54530 4D000	c:20	9	106-0K-K06	Stabiliser Link Left	54830 4D000	L:323
3	103-0K-K02	Axial Joint	57724 4D000	th:MM16X1.5R L:210	10	106-0K-K05	Stabiliser Link Right	54840 4D000	L:323
4	111-0K-K04	Tie Rod End Left	56820 4D000	c:14 th:FM16X1.5R	11	GOM-K12	Silentblock For Susp.Arm	54584 4D000	d:14.4
5	111-0K-K03	Tie Rod End Right	56820 4D100	c:14 th:FM16X1.5R	12	GOM-K13	Silentblock For Susp.Arm	54551 4D000	d:14.1
6	106-0K-K07	Stabiliser Link	55530 4D000	L:72	13	GOM-K10	Stabiliser Mounting	54813 4D000	d:26
7	72-0K-K06	TCA Left Wbj	54500 4D001	c:20					

CEE'D 12/2006 ->

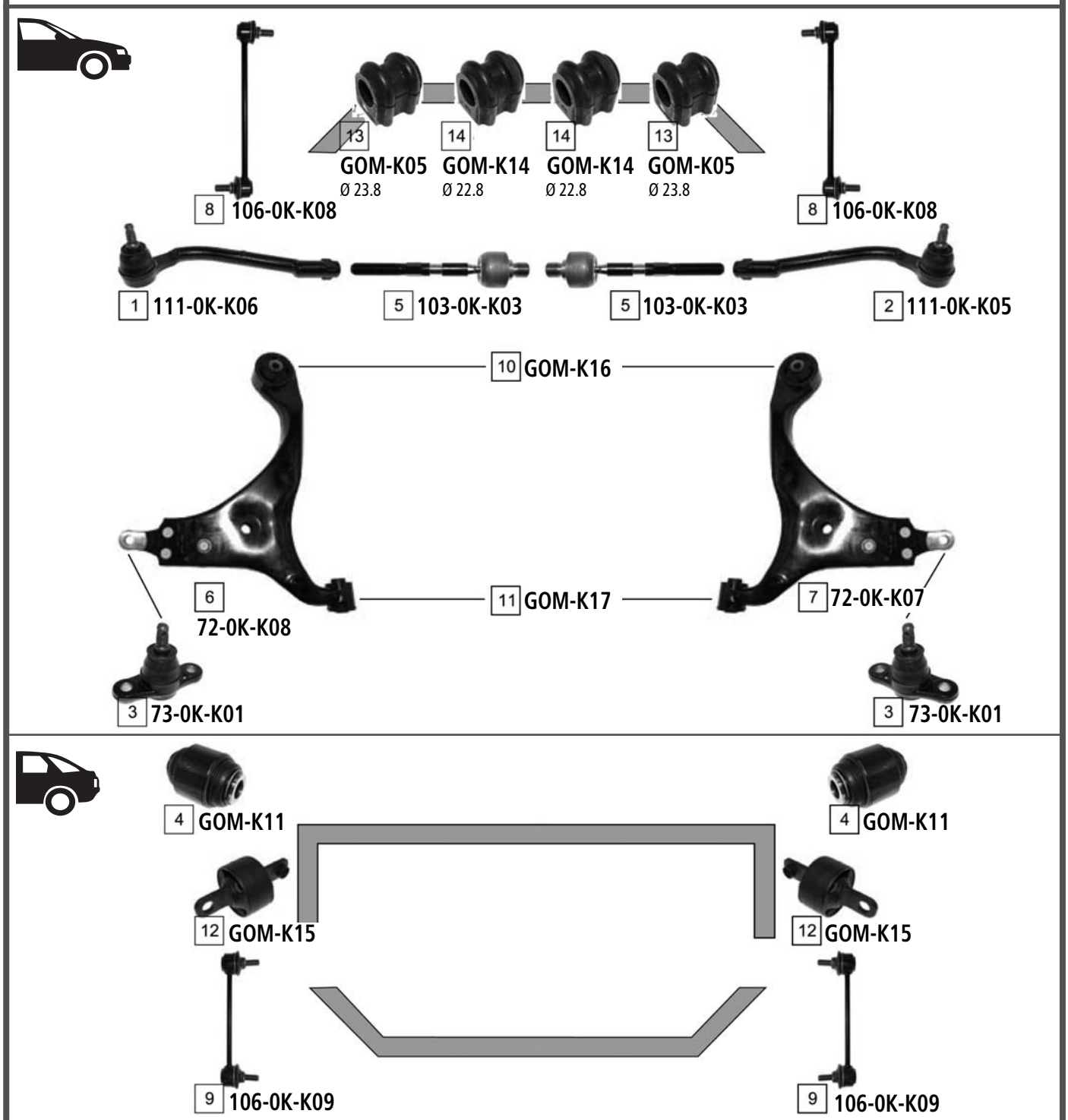

Ref.	ASHIKA CODE	Description	OEM	Measures	Ref	ASHIKA CODE	Description	OEM	Measures
1	111-0K-K06	Tie Rod End Left	56820 2H000	c:13.4 th:FM14X1.5R	8	106-0K-K08	Stabiliser Link	54830 2H000	L:245
2	111-0K-K05	Tie Rod End Right	56820 2H090	c:13.4 th:FM14X1.5R	9	106-0K-K09	Stabiliser Link	55530 1H000	L:171
3	73-0K-K01	Ball Joint	51760 2G000	c:15	10	GOM-K16	Silentblock For Susp.Arm	54584 2H000	d:14
4	GOM-K11	Ball Joint	55130 4D000	-	11	GOM-K17	Silentblock For Susp.Arm	54551 2H000	d:12.4
5	103-0K-K03	Axial Joint	56540 2H000	th:MM16X1.5R L:162	12	GOM-K15	Silentblock For Susp.Arm	55543 1HOOO	-
6	72-0K-K08	TCA Left Wobj	54500 2H000	-	13	GOM-K05	Stabiliser Mounting	54813 1H100	d:23.4
7	72-0K-K07	TCA Right Wobj	54501 2H000	-	14	GOM-K14	Stabiliser Mounting	54813 2H000	d:22.3

O.E.M. names and numbers are used for reference purposes only Ashika assumes no responsibility for possible errors

CERATO 04/2004 ->

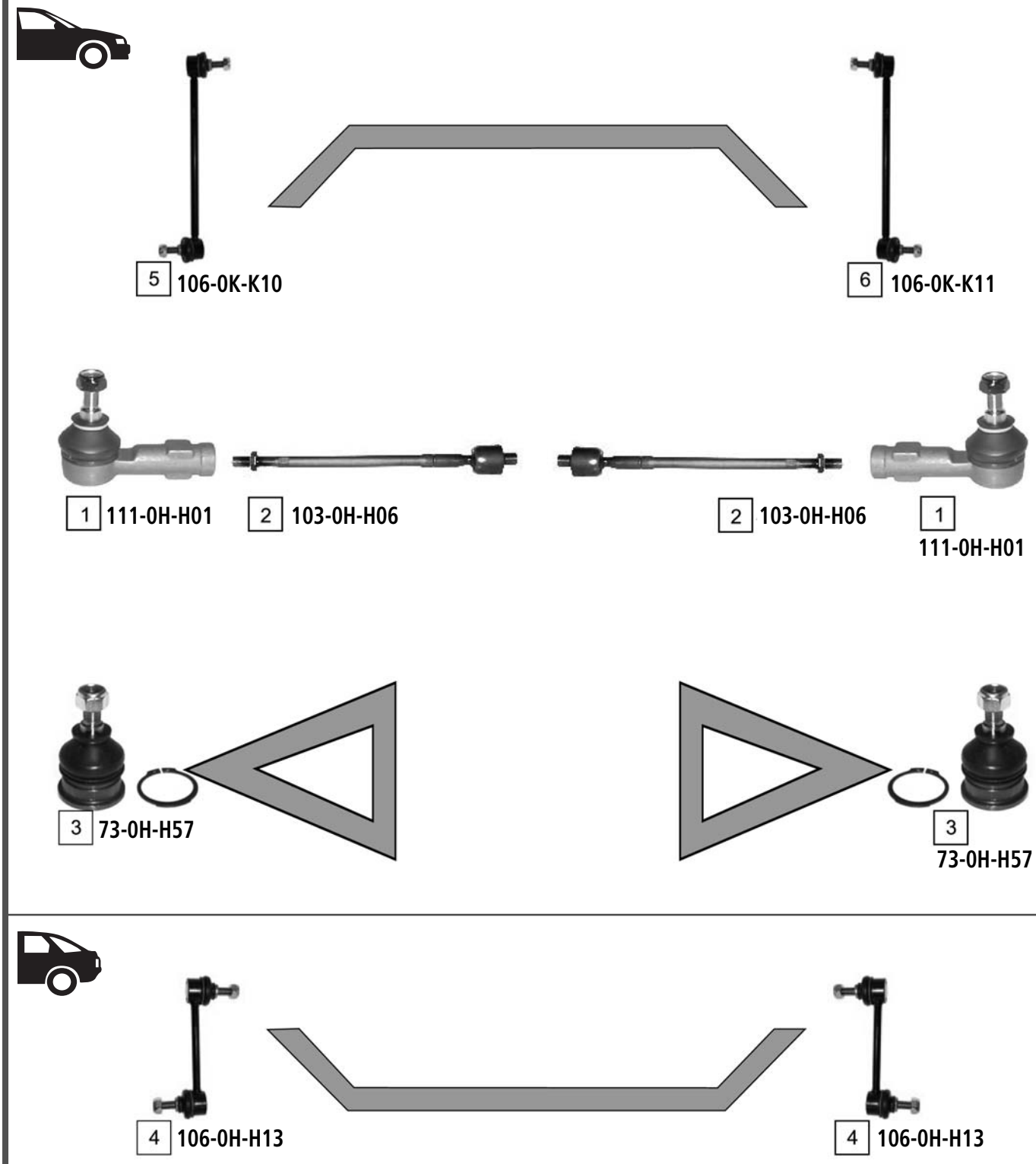

Ref	ASHIKA CODE	Description	OEM	Measures	Ref	ASHIKA CODE	Description	OEM	Measures
1	**111-0H-H01**	Tie Rod End	56820-25000	c:13.8 th:FM14X1.5R	5	**106-0K-K10**	Stabiliser Link Left	54830 2F000	L:250
2	**103-0H-H06**	Axial Joint	57724-2D000	th:MM16X1.5R L:327	6	**106-0K-K11**	Stabiliser Link Right	54840 2F000	L:250
3	**73-0H-H57**	Ball Joint	54520 31600	c:15					
4	**106-0H-H13**	Stabiliser Link	55530 17000	L:128.5					

CLARUS (K9A) **07/1996 - 04/2000**

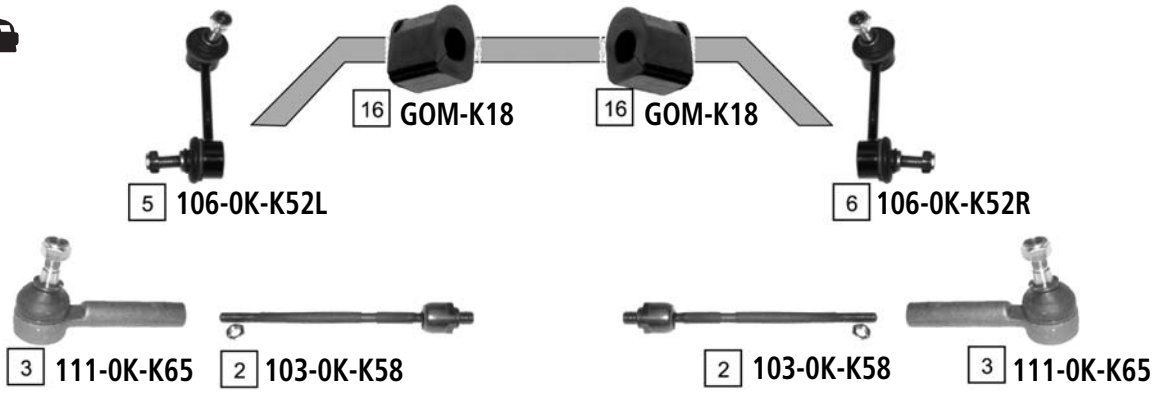

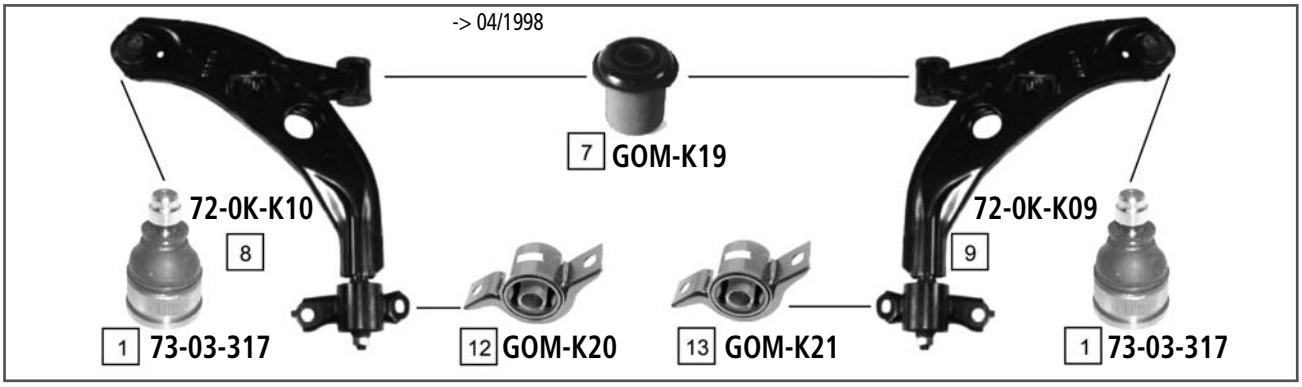

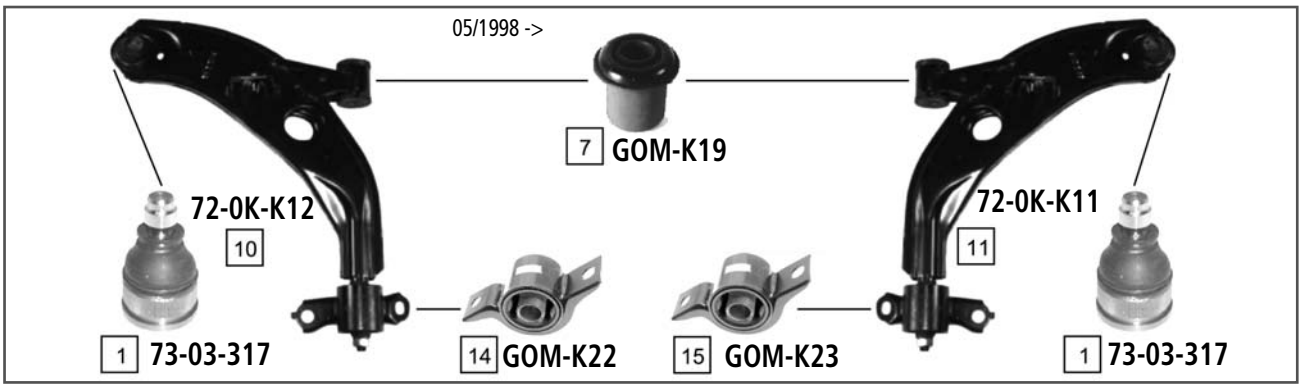

Ref.	ASHIKA CODE	Description	OEM	Measures	Ref	ASHIKA CODE	Description	OEM	Measures
1	73-03-317	Ball Joint LOWER	0G030 34550B	c:18	9	72-0K-K09	TCA Right	0K9A2-34300	
2	103-0K-K58	Axial Joint	0K2A1 32240	th:MM16X1.5R L:282	10	72-0K-K12	TCA Left	0K9A6-34350	
3	111-0K-K65	Tie Rod End	0K201 32280	c:13 th:FM14X1.5R	11	72-0K-K11	TCA Right	0K9A6-34300	
4	106-0K-K53	Stabiliser Link	0K9A3 28170A	L:70	12	GOM-K20	Silentblock For Susp.Arm	0K9A2-34464	
5	106-0K-K52L	Stabiliser Link Left	KGA2A 34170A	L:104	13	GOM-K21	Silentblock For Susp.Arm	0K9A2-3446X	
6	106-0K-K52R	Stabiliser Link Right	KGA2A 34150A	L:104	14	GOM-K22	Silentblock For Susp.Arm	0K9A6-3446Y	
7	GOM-K19	Silentblock For Susp.Arm	0K9A2-34470		15	GOM-K23	Silentblock For Susp.Arm	0K9A6-3446X	
8	72-0K-K10	TCA Left	0K9A2-34350		16	GOM-K18	Stabiliser Mounting	0K9A2-34156	

O.E.M. names and numbers are used for reference purposes only Ashika assumes no responsibility for possible errors

K 2500 - 2700 01/1997 ->

MS

3 111-0A-A04 1 103-0K-K04 1 103-0K-K04 3 111-0A-A04

PS

3 111-0A-A04 2 103-0K-K05 2 103-0K-K05 3 111-0A-A04

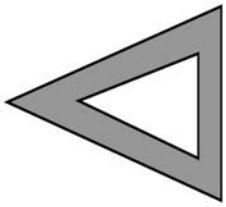

6 71-0K-K52L

8 71-0K-K52R

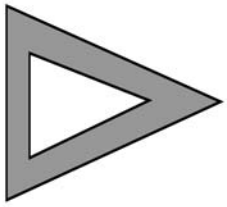

4 73-0A-A01 4 73-0A-A01

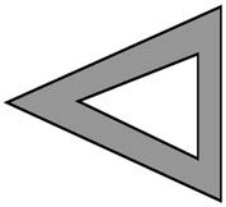

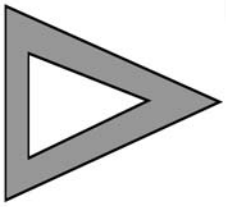

5 73-0A-A02 5 73-0A-A02

7 26-0K-K51L 9 26-0K-K51R

Ref	ASHIKA CODE	Description	OEM	Measures	Ref	ASHIKA CODE	Description	OEM	Measures
1	**103-0K-K04**	Axial Joint	0K72A 32270	th:MM17X1R L:275	6	**71-0K-K52L**	TCA Left	OSE46-34-200	
2	**103-0K-K05**	Axial Joint	0K60A32270/A	th:MM18X1.5R L:183	7	**26-0K-K51L**	TCA Left	OSO83-34-300B	
3	**111-0A-A04**	Tie Rod End	0K71032240	c:14 th:FM14X1.5R	8	**71-0K-K52R**	TCA Right	OSO46-34-250	
4	**73-0A-A01**	Ball Joint	0K710 34540		9	**26-0K-K51R**	TCA Right	OSO83-34-350B	
5	**73-0A-A02**	Ball Joint	0K710 34510						

PICANTO **02/2004 ->**

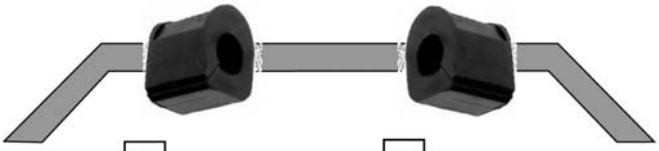

11 GOM-K24 11 GOM-K24

2 106-0K-K12 3 106-0K-K13

MS

1 111-0K-K07 7 103-0K-K06 7 103-0K-K06 1 111-0K-K07

PS

1 111-0K-K07 8 103-0K-K07 8 103-0K-K07 1 111-0K-K07

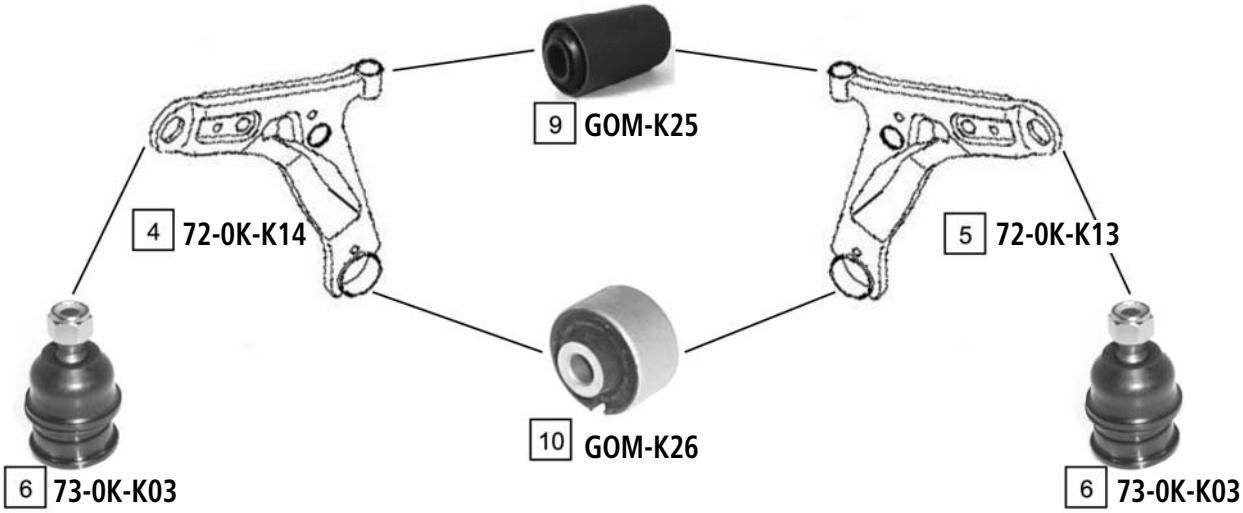

Ref.	ASHIKA CODE	Description	OEM	Measures	Ref	ASHIKA CODE	Description	OEM	Measures
1	**111-0K-K07**	Tie Rod End	568.20.07.000	c:13.1 th:FM12X1.25	7	**103-0K-K06**	Axial Joint	57724 07100	th:MM16X1.5R L:290
2	**106-0K-K12**	Stabiliser Link Left	54830 07000	L:230	8	**103-0K-K07**	Axial Joint	57724 07000	th:MM16X1.5R L:290
3	**106-0K-K13**	Stabiliser Link Right	54840 07000	L:230	9	**GOM-K25**	Silentblock For Susp.Arm	54584 07000	
4	**72-0K-K14**	TCA Left Wbj	54500 07200		10	**GOM-K26**	Silentblock For Susp.Arm	54551 07000	
5	**72-0K-K13**	TCA Right Wbj	54501 07200		11	**GOM-K24**	Stabiliser Mounting	54812 07100	
6	**73-0K-K03**	Ball Joint	54530 07000	c:16					

O.E.M. names and numbers are used for reference purposes only Ashika assumes no responsibility for possible errors

PREGIO (TB) **01/1997 - 01/2005**

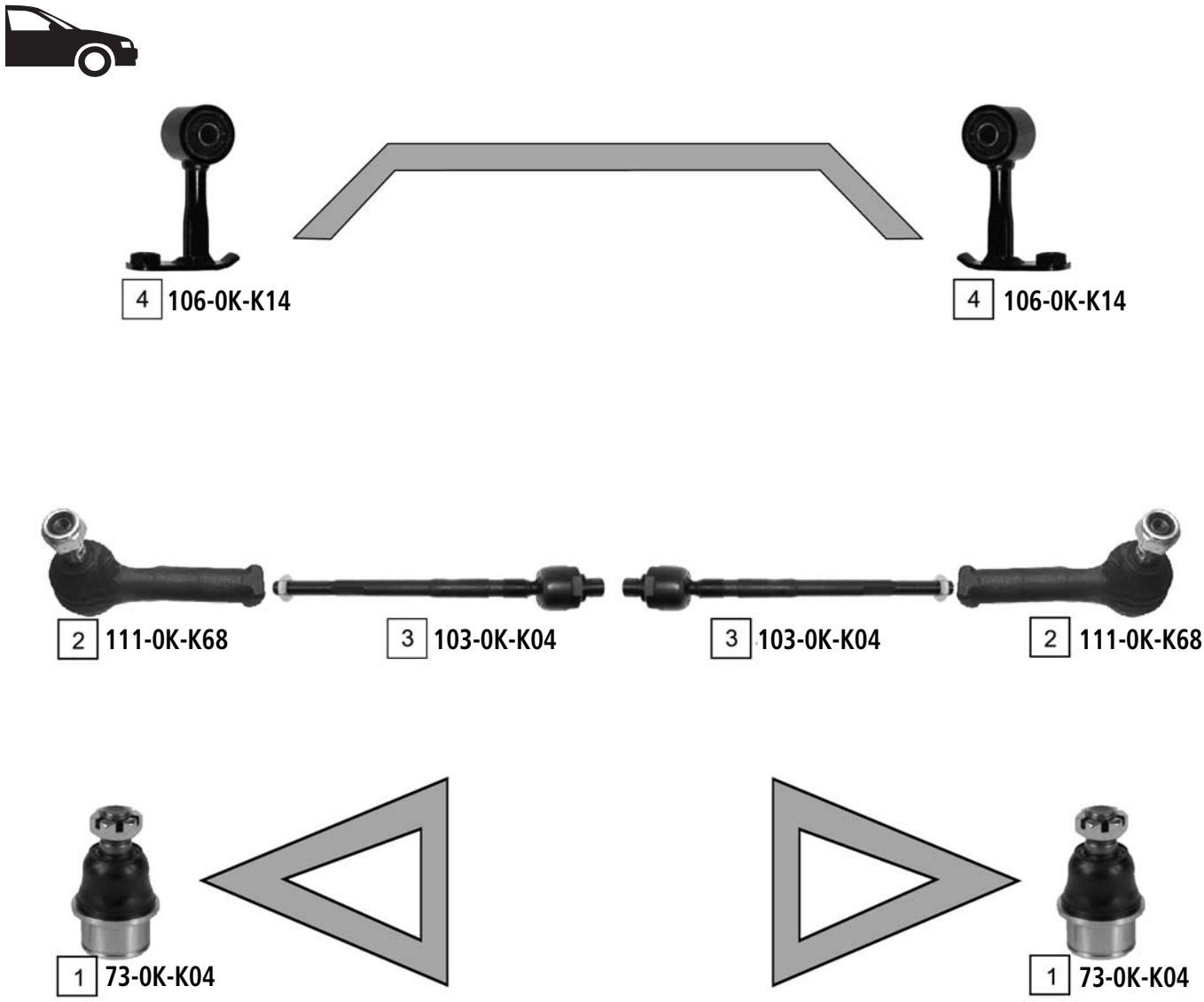

Ref	ASHIKA CODE	Description	OEM	Measures	Ref	ASHIKA CODE	Description	OEM	Measures
1	**73-0K-K04**	Ball Joint	0K72A 34510A	c:21.6	3	**103-0K-K04**	Axial Joint	OK72A 32270	th:MM17X1R L:275
2	**111-0K-K68**	Tie Rod End	0K72A 32240		4	**106-0K-K14**	Stabiliser Link	0K72A 34150A	L:77

PRIDE (DA) **01/1990 - 05/2001**

2 111-03-325 1 103-0K-K53

1 103-0K-K53 2 111-03-325

3 73-0K-K52

3 73-0K-K52

Ref.	ASHIKA CODE	Description	OEM	Measures	Ref	ASHIKA CODE	Description	OEM	Measures
1	**103-0K-K53**	Axial Joint	KK150-32-240	th:MM16X1.5R L:265	3	**73-0K-K52**	TCA	KKY01-34-390A	c:16
2	**111-03-325**	Tie Rod End	8AB1-32-280	c:12.6 th:FM12X1.25					

O.E.M. names and numbers are used for reference purposes only Ashika assumes no responsibility for possible errors

RETONA (CE) 06/1999 - 01/2003

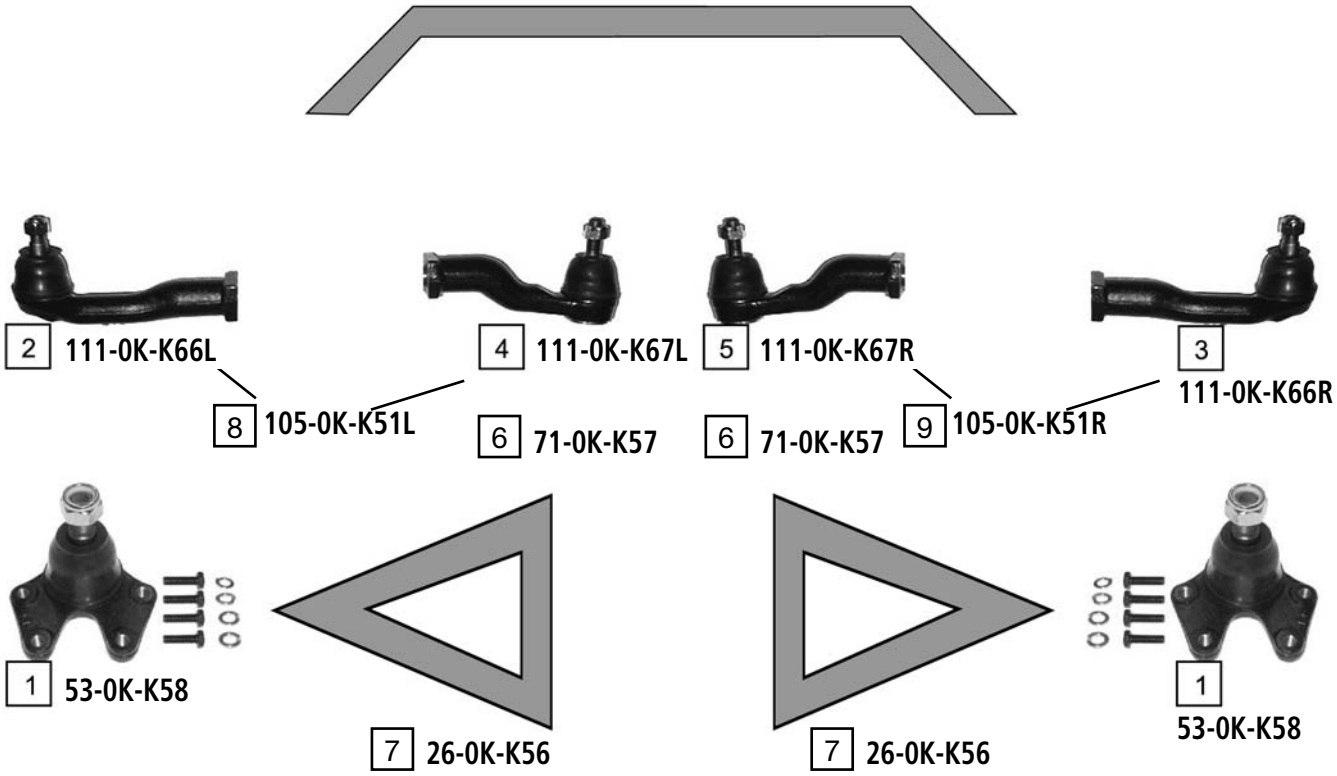

Ref	ASHIKA CODE	Description	OEM	Measures	Ref	ASHIKA CODE	Description	OEM	Measures
1	**53-0K-K58**	Ball Joint	0K011-34-510B	c:18	6	**71-0K-K57**		OKO11-34-200	
2	**111-0K-K66L**	Tie Rod End Outer	OKO11-32-240A	c:13.4 th:FM18X1.5L	7	**26-0K-K56**		OKO11-34-300D	
3	**111-0K-K66R**	Tie Rod End Outer	OKO11-32-250A	c:13.4	8	**105-0K-K51L**		OKO11-32-270A	
4	**111-0K-K67L**	Tie Rod End Inner	OKO11-32-230	c:14.6 th:FM18X1.5R	9	**105-0K-K51R**		OKO11-32-290A	
5	**111-0K-K67R**	Tie Rod End Inner	OKO11-32-280	c:14.6 th:FM18X1.5L					

RIO 09/2000 - 02/2005

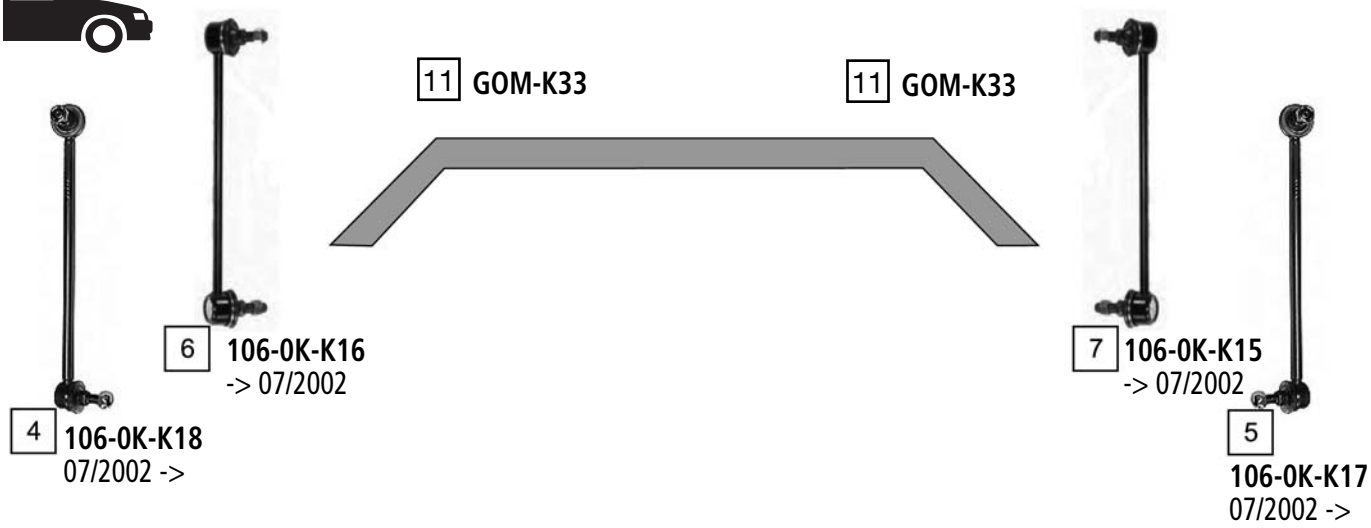

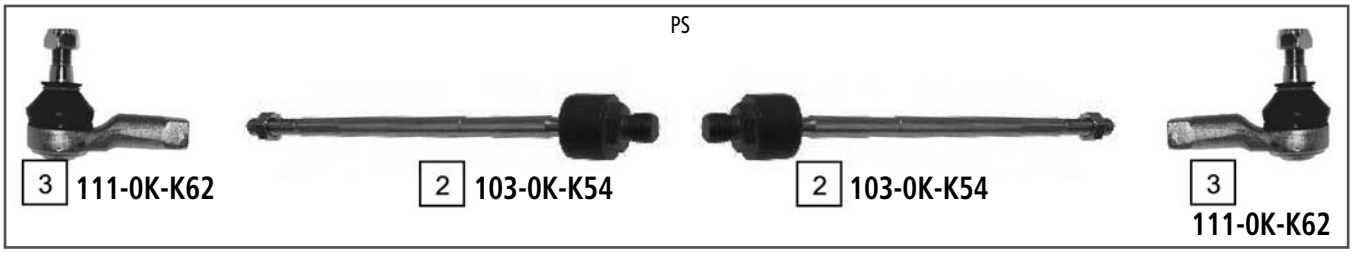

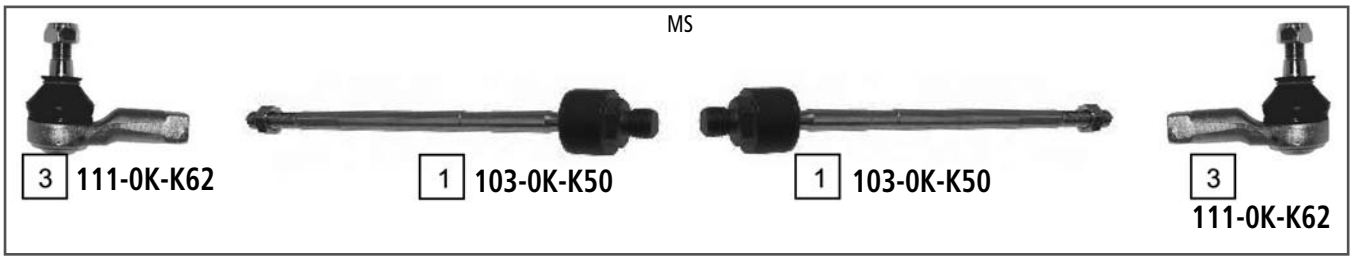

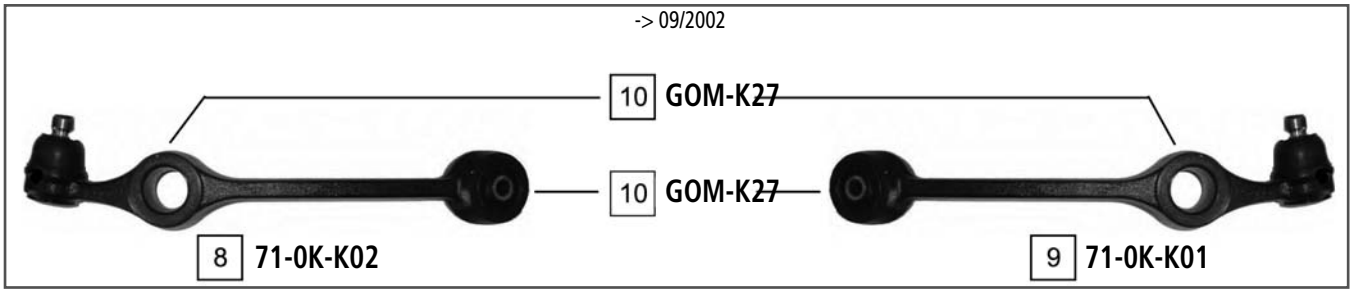

Ref.	ASHIKA CODE	Description	OEM	Measures	Ref	ASHIKA CODE	Description	OEM	Measures
1	**103-0K-K50**	Axial Joint	KDX5032240B		7	**106-0K-K15**	Stabiliser Link Right	0K33C 34150A	L:240
2	**103-0K-K54**	Axial Joint	KDX53 32240B	th:MM16X1.5R L:279	8	**71-0K-K01**	TCA Left	0K30B 34350B	-
3	**111-0K-K62**	Tie Rod End	MDX5032280	c:13.2 th:FM12X1.25	9	**71-0K-K02**	TCA Right	0K30B34300B	-
4	**106-0K-K18**	Stabiliser Link Left	54820 FD000	L:218	10	**GOM-K27**	Silentblock For Susp.Arm	0K30A 34480 C	-
5	**106-0K-K17**	Stabiliser Link Right	54830 FD000		11	**GOM-K33**	Stabiliser Mounting	54813-FD000	
6	**106-0K-K16**	Stabiliser Link Left	0K33C 34160A	L:240					

O.E.M. names and numbers are used for reference purposes only Ashika assumes no responsibility for possible errors

RIO II 03/2005 ->

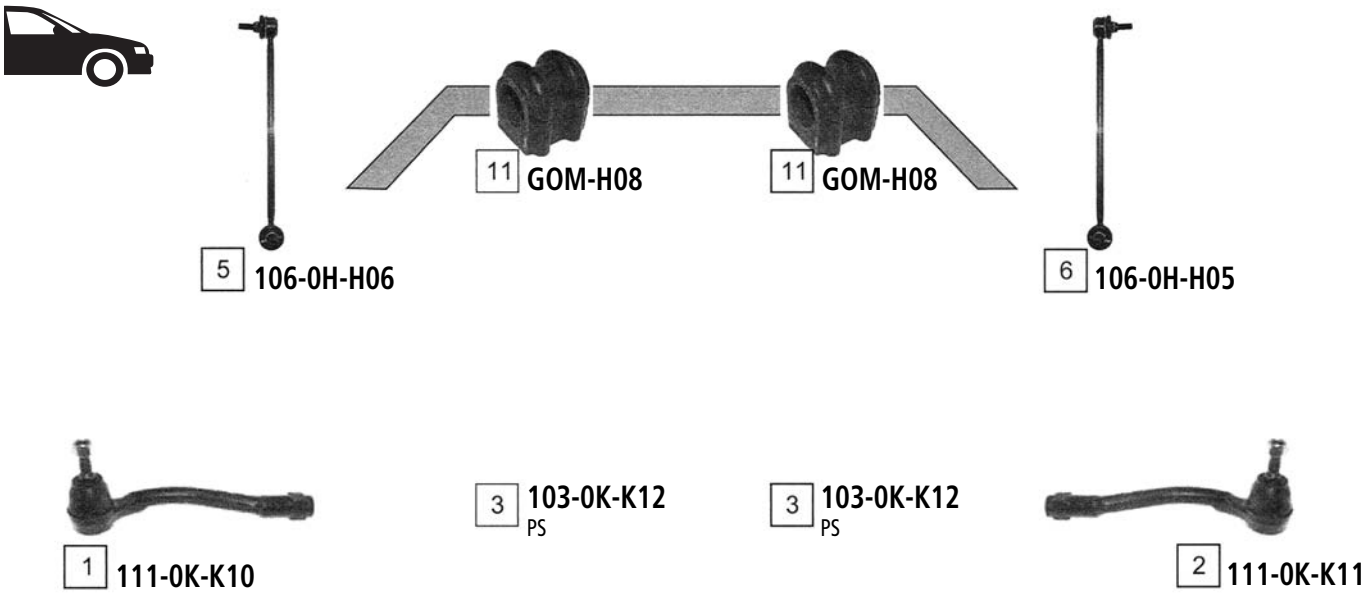

06/2006 ->

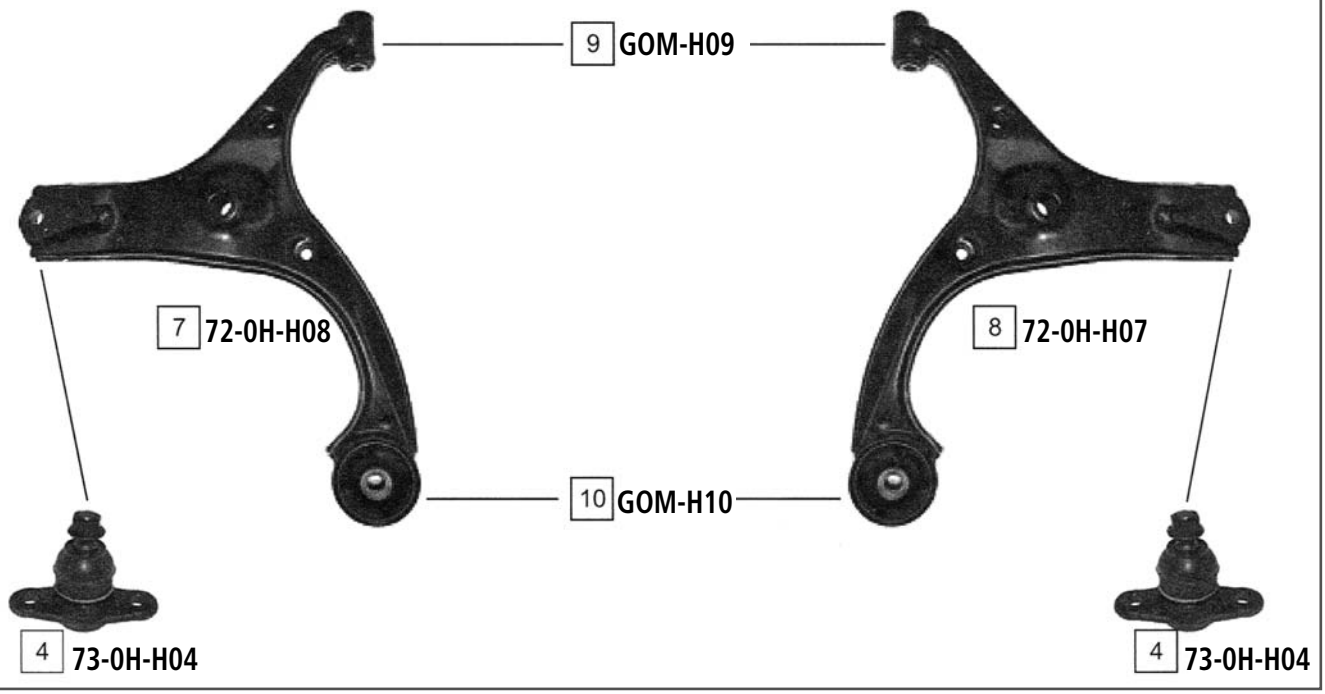

Ref.	ASHIKA CODE	Description	OEM	Measures	Ref	ASHIKA CODE	Description	OEM	Measures
1	111-0K-K10	Tie Rod End Left	56820 1G900	c:13.4 th:FM14X1.5R	7	72-0H-H08	TCA Left	54500 1E100	c:15
2	111-0K-K11	Tie Rod End Right	56820 1G000	c:13.4 th:FM14X1.5R	8	72-0H-H07	TCA Right	54501 1E100	c:15
3	103-0K-K12	Axial Joint	57724 1G100	th:MM16X1.5R L:186	9	GOM-H09	Silentblock For Susp.Arm	54584 1G000	d:66.5
4	73-0H-H04	Ball Joint	51760 1G000	c:15	10	GOM-H10	Silentblock For Susp.Arm	54551 1E000	d:32.5
5	106-0H-H06	Stabiliser Link Left	54830 1G000	L: 285.5	11	GOM-H08	Stabiliser Mounting	54812 1G100	-
6	106-0H-H05	Stabiliser Link Right	54840 1G000	L: 285.5					

MENTOR I
SEPHIA I (FA)
SPECTRA

09/1993 - 05/1998

MS

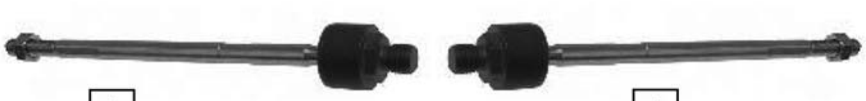

1 **103-0K-K08** 1 **103-0K-K08**

3 **111-0K-K65**

PS
-> 08/1997

2 **103-0K-K09** 2 **103-0K-K09**

3 **111-0K-K65**

PS
09/1997 ->

4 **103-0K-K58** 5 **103-0K-K51**

6 **26-0K-K53L** 7 **26-0K-K53R**

8 **53-0K-K57** 8 **53-0K-K57**

Ref	ASHIKA CODE	Description	OEM	Measures	Ref	ASHIKA CODE	Description	OEM	Measures
1	**103-0K-K08**	Axial Joint	0K201 32240		5	**103-0K-K51**	Axial Joint	0K2A2 32240	
2	**103-0K-K09**	Axial Joint	0K203 32240	th:MM16X1.5R L:284	6	**26-0K-K53L**	TCA Left	0K201-34-350C	
3	**111-0K-K65**	Tie Rod End	0K201 32280	c:13 th:FM14X1.5R	7	**26-0K-K53R**	TCA Right	0K201-34-300C	
4	**103-0K-K58**	Axial Joint	0K2A1 32240	th:MM16X1.5R L:282	8	**53-0K-K57**	Ball Joint	0K201-34-550C	

O.E.M. names and numbers are used for reference purposes only Ashika assumes no responsibility for possible errors

SHUMA I (FB) **10/1997 - 03/2001**

5 **106-0K-K20** 02/1999 ->

3 **106-0K-K55** -> 01/1999

3 **106-0K-K55** -> 01/1999

6 **106-0K-K19** 02/1999 ->

7 **103-0K-K58**

7 **103-0K-K58**

1 **111-0K-K65**

1 **111-0K-K65**

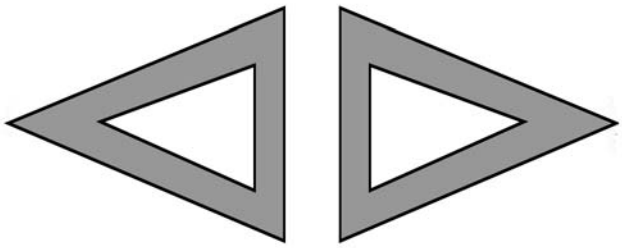

4 **53-0K-K60**

4 **53-0K-K60**

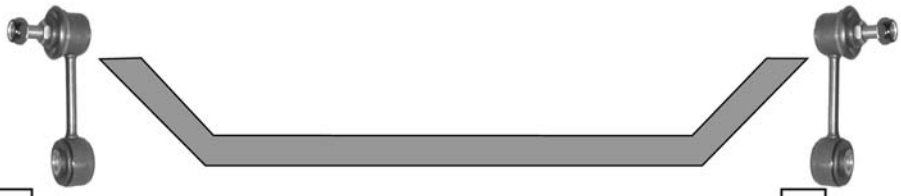

2 **106-0K-K54**

2 **106-0K-K54**

Ref.	ASHIKA CODE	Description	OEM	Measures	Ref	ASHIKA CODE	Description	OEM	Measures
1	**111-0K-K65**	Tie Rod End	0K201 32280	c:13 th:FM14X1.5R	5	**106-0K-K20**	Stabiliser Link Left	0K2N1 34170A	L:274
2	**106-0K-K54**	Stabiliser Link	0K2A1 34150B	L:89	6	**106-0K-K19**	Stabiliser Link Right	0K2N1 34150A	L:274
3	**106-0K-K55**	Stabiliser Link	0K2A5 34150A	L:86	7	**103-0K-K58**	Axial Joint	0K2A1-32-240	
4	**53-0K-K60**	Ball Joint	0K2A1 34550A	c:18					

SORENTO (JC) 05/2002 ->

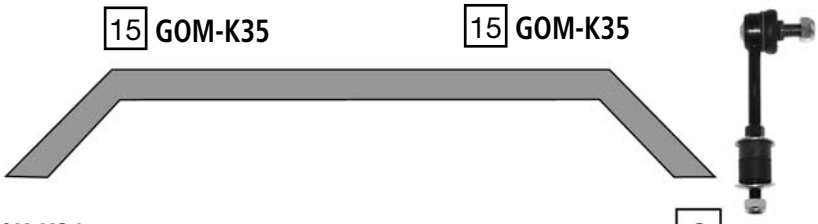

15 GOM-K35

15 GOM-K35

7 106-0K-K22
03/2004 ->

6 106-0K-K21
-> 02/2004

6 106-0K-K21
-> 02/2004

8 106-0K-K23
03/2004 ->

3 111-0K-K08

1 103-0K-K10

2 103-0K-K11

4 111-0K-K09

LOWER

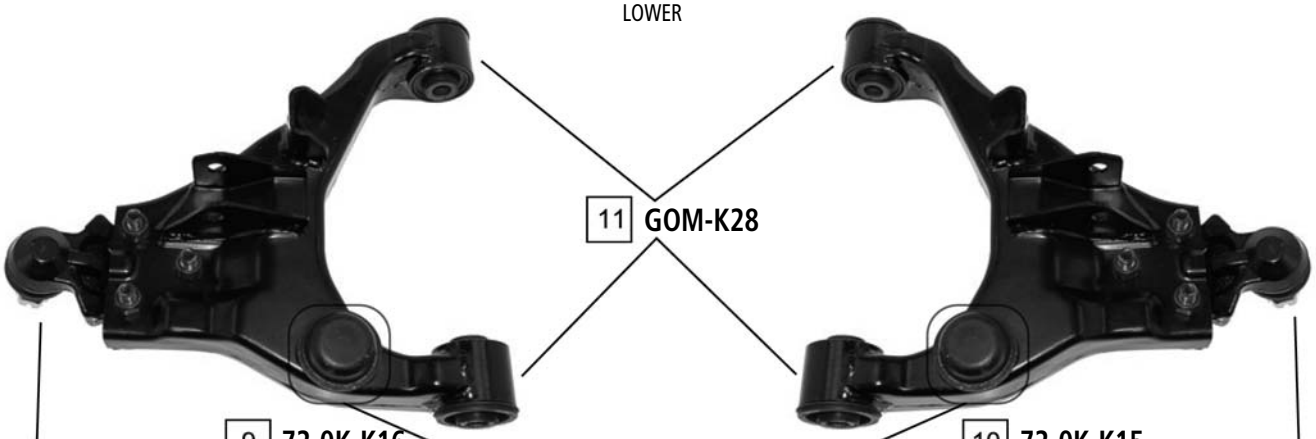

11 GOM-K28

9 72-0K-K16

10 72-0K-K15

12 GOM-K29

5 73-0K-K05

5 73-0K-K05

13 GOM-K31
-> 02/2004

14 GOM-K32
02/2004 ->

13 GOM-K31
-> 02/2004

14 GOM-K32
02/2004 ->

Ref	ASHIKA CODE	Description	OEM	Measures	Ref	ASHIKA CODE	Description	OEM	Measures
1	103-0K-K10	Axial Joint	57732 3E010	th: MM18X1.5R L:172	9	72-0K-K16	TCA Left	54510 3E001	c: 21.6
2	103-0K-K11	Axial Joint	57731 3E010	th: MM18X1.5R L:172	10	72-0K-K15	TCA Right	54520 3E001	c: 21.6
3	111-0K-K08	Tie Rod End Left	56820 3E000		11	GOM-K28	Silentblock For Susp.Arm	54580 3E001	
4	111-0K-K09	Tie Rod End Right	56820 3E900		12	GOM-K29	Silentblock For Susp.Arm	54590 3E000	
5	73-0K-K05	Ball Joint	54570 3E000	c: 21.6	13	GOM-K31	Stabiliser Mounting	55530-3E010	
6	106-0K-K21	Stabiliser Link	54810 3E000		14	GOM-K32	Stabiliser Mounting	55530-3E020	
7	106-0K-K22	Stabiliser Link Left	54811 3E010	L:85	15	GOM-K35	Stabiliser Mounting	54830-3E020	
8	106-0K-K23	Stabiliser Link Right	54811 3E060	L:85					

O.E.M. names and numbers are used for reference purposes only Ashika assumes no responsibility for possible errors

MENTOR II
SEPHIA II
SHUMA II (FB)
SPECTRA II

06/2000 - 02/2004

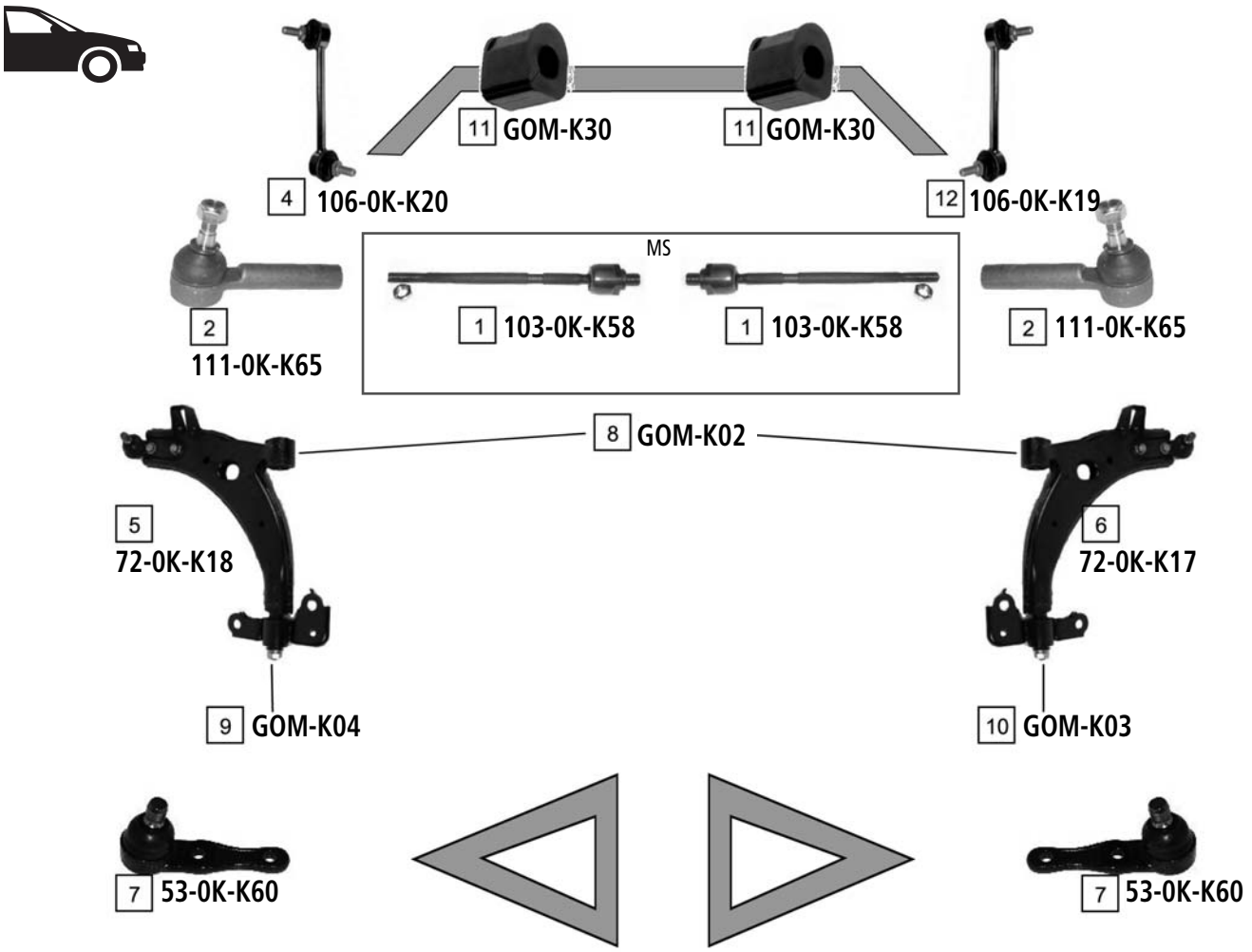

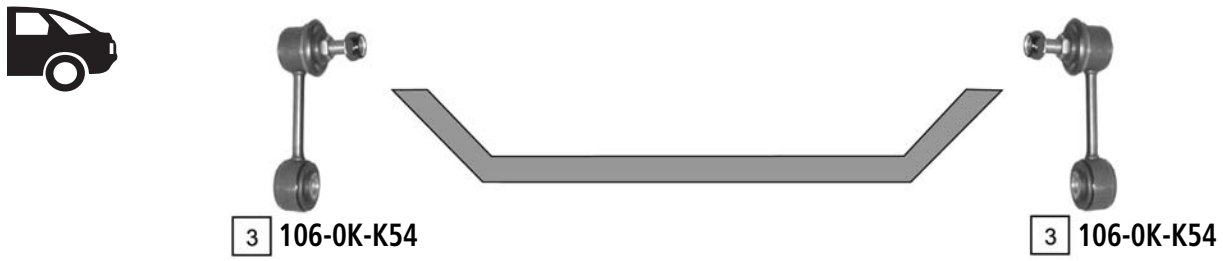

Ref	ASHIKA CODE	Description	OEM	Measures	Ref	ASHIKA CODE	Description	OEM	Measures
1	**103-0K-K58**	Axial Joint	0K2A1 32240	th: MM16X1.5R L:282	7	**53-0K-K60**	Ball Joint	0K2A1 34550A	c:18
2	**111-0K-K65**	Tie Rod End	0K201 32280	c:13 th:FM14X1.5R	8	**GOM-K02**	Silentblock For Susp.Arm	0K2C0 34460	
3	**106-0K-K54**	Stabiliser Link	0K2A1 34150B	L:89	9	**GOM-K04**	Silentblock For Susp.Arm	0K2A1 3446Y	
4	**106-0K-K20**	Stabiliser Link Left	0K2N1 34170A	L:274	10	**GOM-K03**	Silentblock For Susp.Arm	0K2A1 3446X	
5	**72-0K-K18**	TCA Left	0K2NA 34350B		11	**GOM-K30**	Stabiliser Mounting	0K2NA 34156	
6	**72-0K-K17**	TCA Right	0K2NA 34300B		12	**106-0K-K19**	Stabiliser Link Right	0K2N1 34150A	L:274

SPORTAGE (K00) 04/1994 - 08/2004

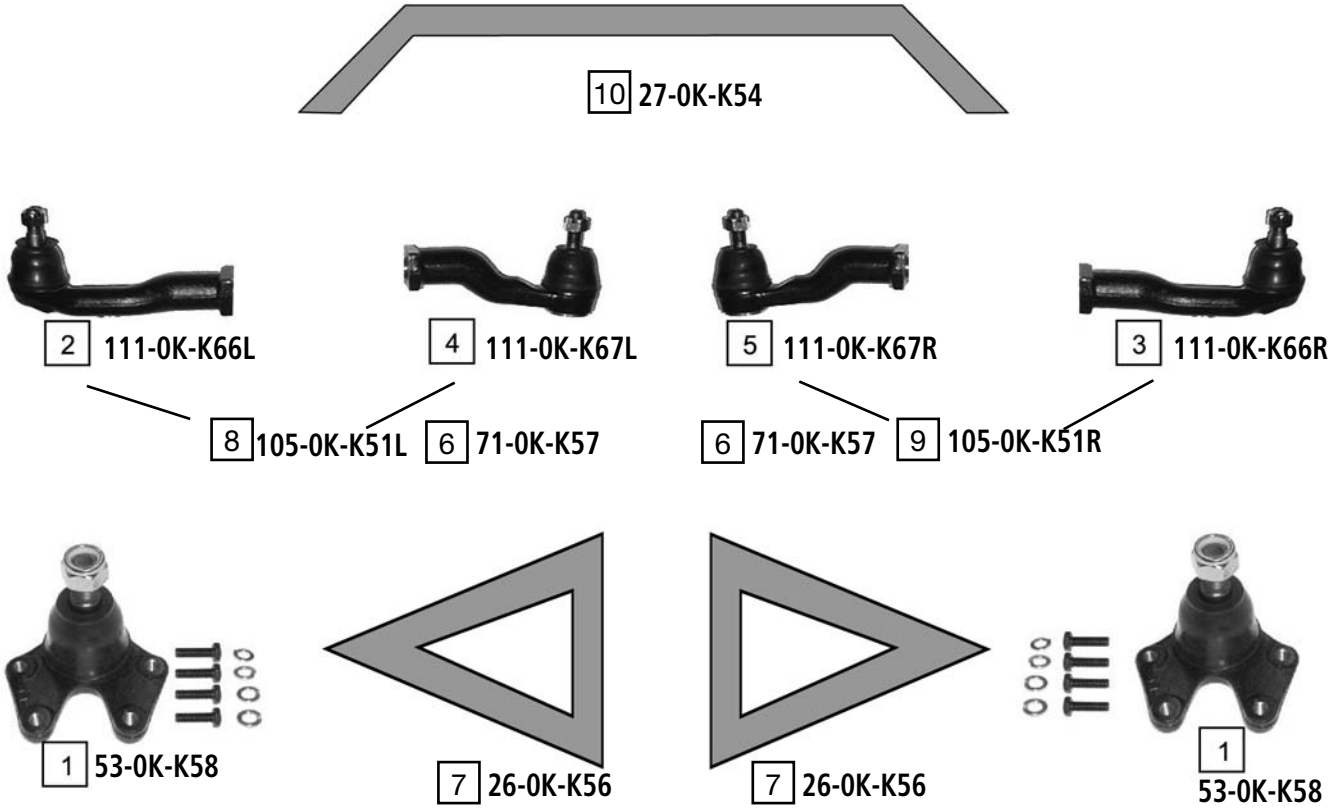

Ref	ASHIKA CODE	Description	OEM	Measures	Ref	ASHIKA CODE	Description	OEM	Measures
1	**53-0K-K58**	Ball Joint	0K011-34-510B	c:18	6	**71-0K-K57**	TCA	0K011-34-200	
2	**111-0K-K66L**	Tie Rod End Outer	0K011-32-240A	c:13.4 th:FM18X1.5L	7	**26-0K-K56**	TCA	0K011-34-300D	
3	**111-0K-K66R**	Tie Rod End Outer	0K011-32-250A	c:13.4	8	**105-0K-K51L**		0K011-32-270A	
4	**111-0K-K67L**	Tie Rod End Inner	0K011-32-230	c:14.6 th:FM18X1.5R	9	**105-0K-K51R**		0K011-32-290A	
5	**111-0K-K67R**	Tie Rod End Inner	0K011-32-280	c:14.6 th:FM18X1.5L	10	**27-0K-K54**		0K011-32-260A	

O.E.M. names and numbers are used for reference purposes only Ashika assumes no responsibility for possible errors

SPORTAGE **09/2004 ->**

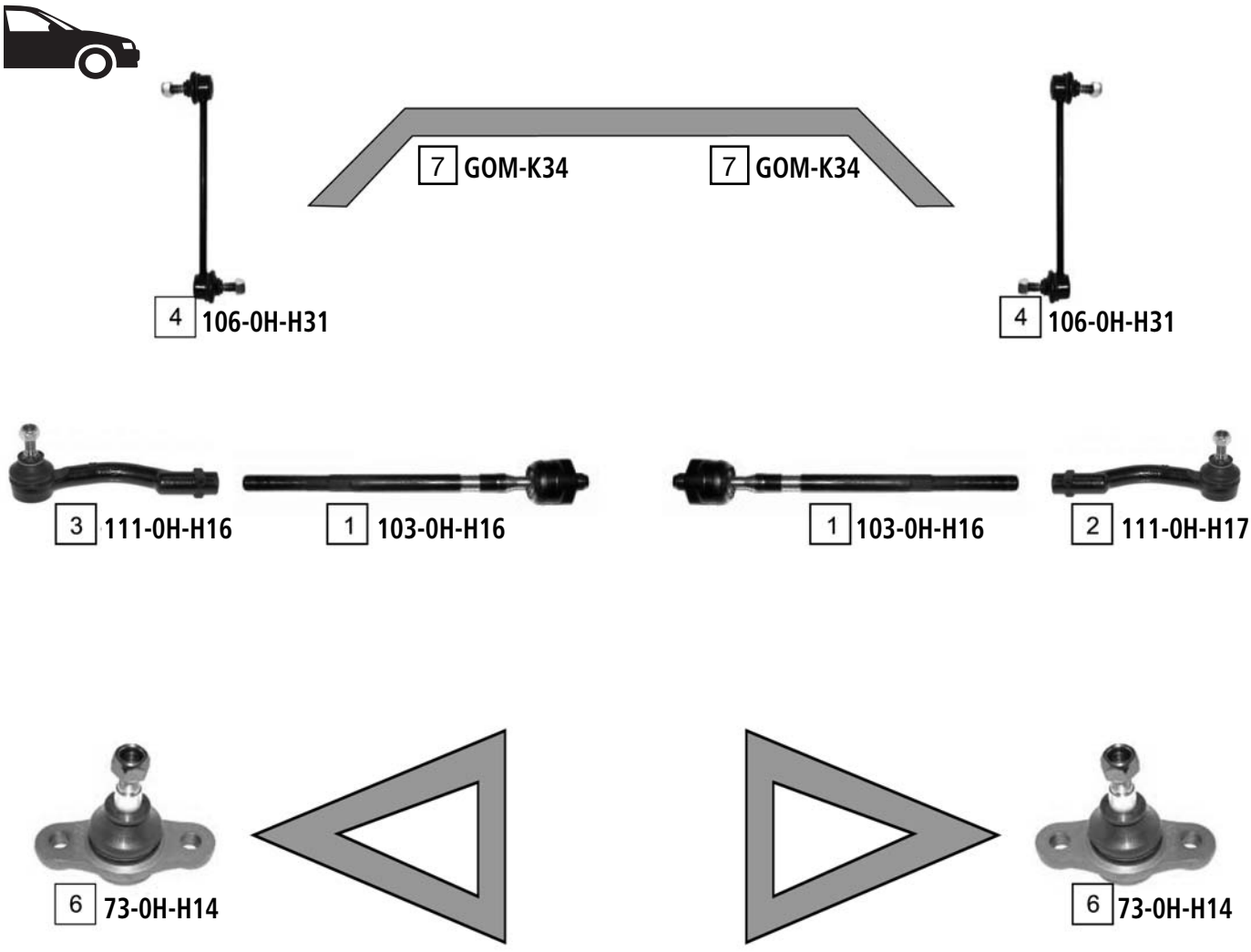

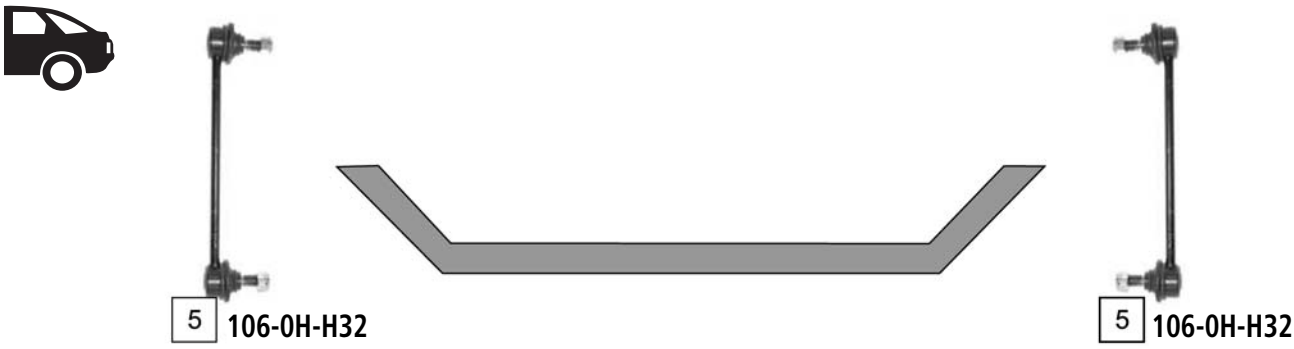

Ref.	ASHIKA CODE	Description	OEM	Measures	Ref	ASHIKA CODE	Description	OEM	Measures
1	**103-0H-H16**	Axial Joint	57724 2E000	th:MM16X1.5R L:243	5	**106-0H-H32**	Stabiliser Link	55530 1F000	L:220
2	**111-0H-H17**	Tie Rod End Left	56820 2E000	c:13.3 th:FM10X1.5R	6	**73-0H-H14**	Ball Joint	51760 2E000	c:14.5
3	**111-0H-H16**	Tie Rod End Right	56820 2E900	c:13.3 th:FM10X1.5R	7	**GOM-K34**	Stabiliser Mounting	54813-2E100	
4	**106-0H-H31**	Stabiliser Link	54830 2E000	L:238					

DEFENDER (LD) **09/1990 - 12/2000**

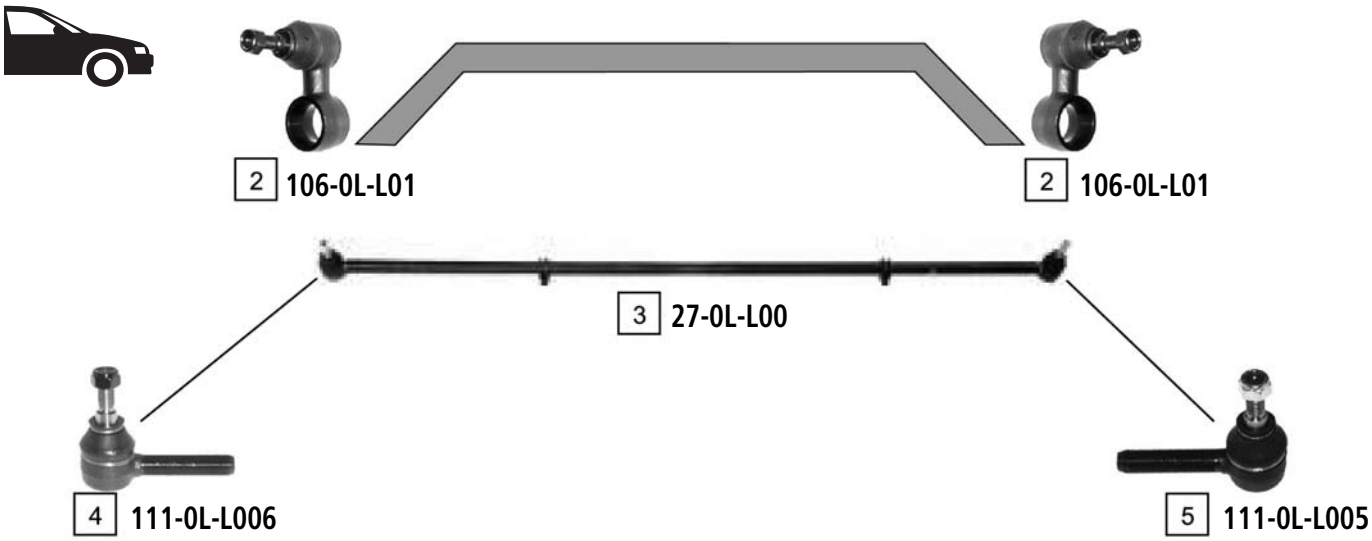

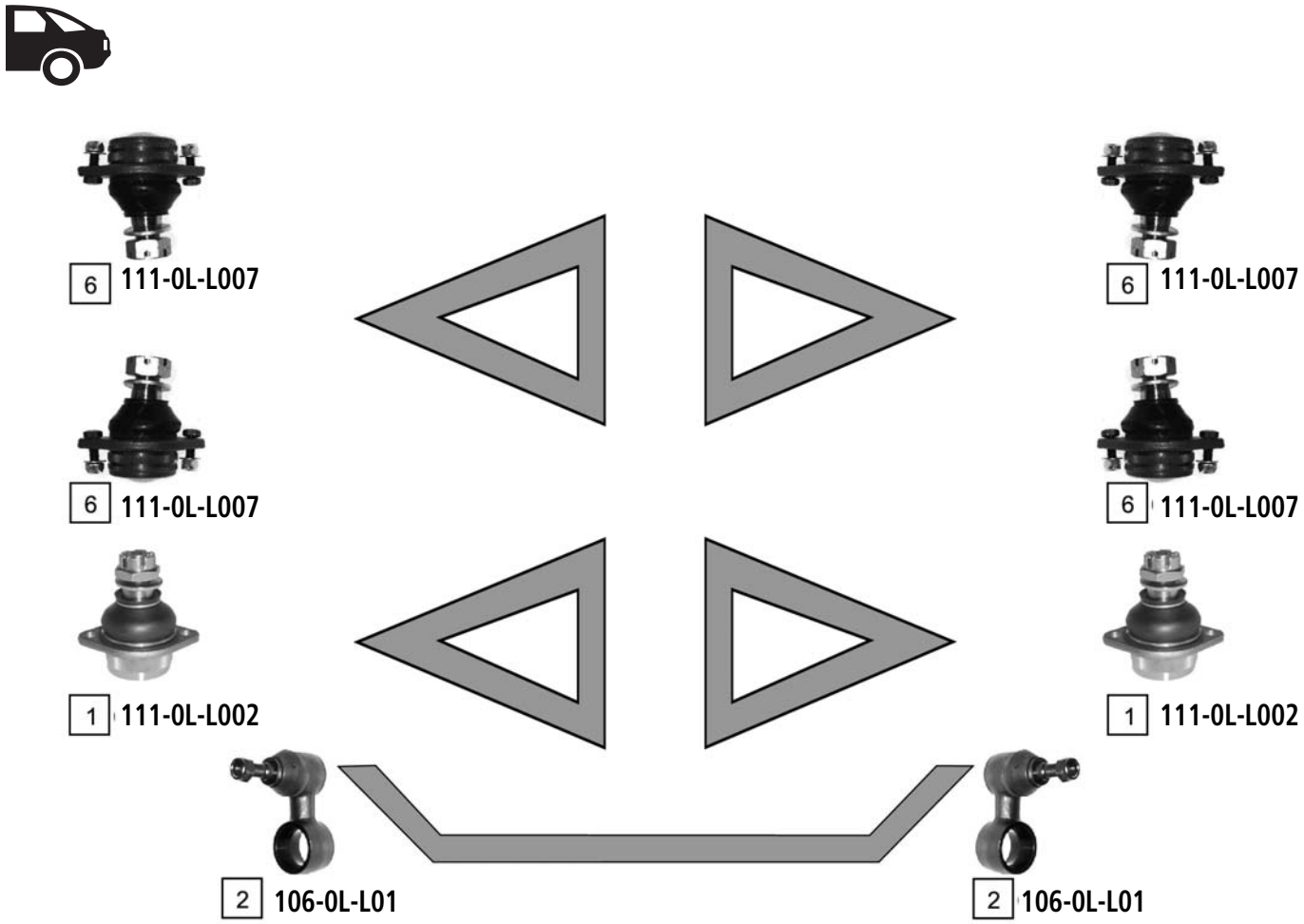

Ref	ASHIKA CODE	Description	OEM	Measures	Ref	ASHIKA CODE	Description	OEM	Measures
1	**111-0L-L002**	Ball Joint	ANR 1799		4	**111-0L-L006**	Tie Rod End Left	RTC 5870	"c:15 th:11/16""x16
2	**106-0L-L01**	Stabiliser Link	NTC 1888	L:63	5	**111-0L-L005**	Tie Rod End Right	RTC 5869	c:14.8 th:M17R 16G
3	**27-0L-L00**	Tie Rod	NRC9743		6	**111-0L-L007**	Ball Joint UPPER And LOWER	575 882	c:23.3

O.E.M. names and numbers are used for reference purposes only Ashika assumes no responsibility for possible errors

DISCOVERY I — **10/1989 - 06/1994**

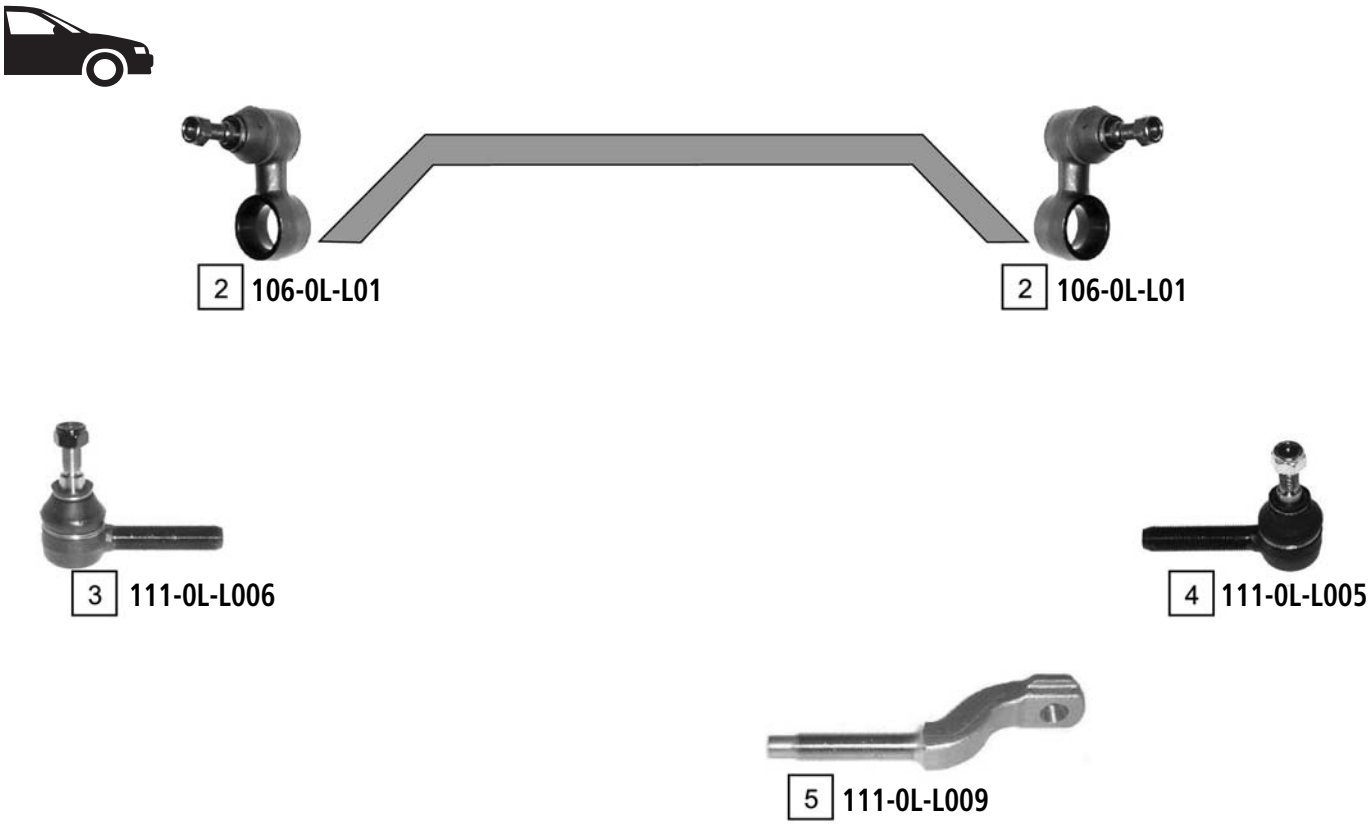

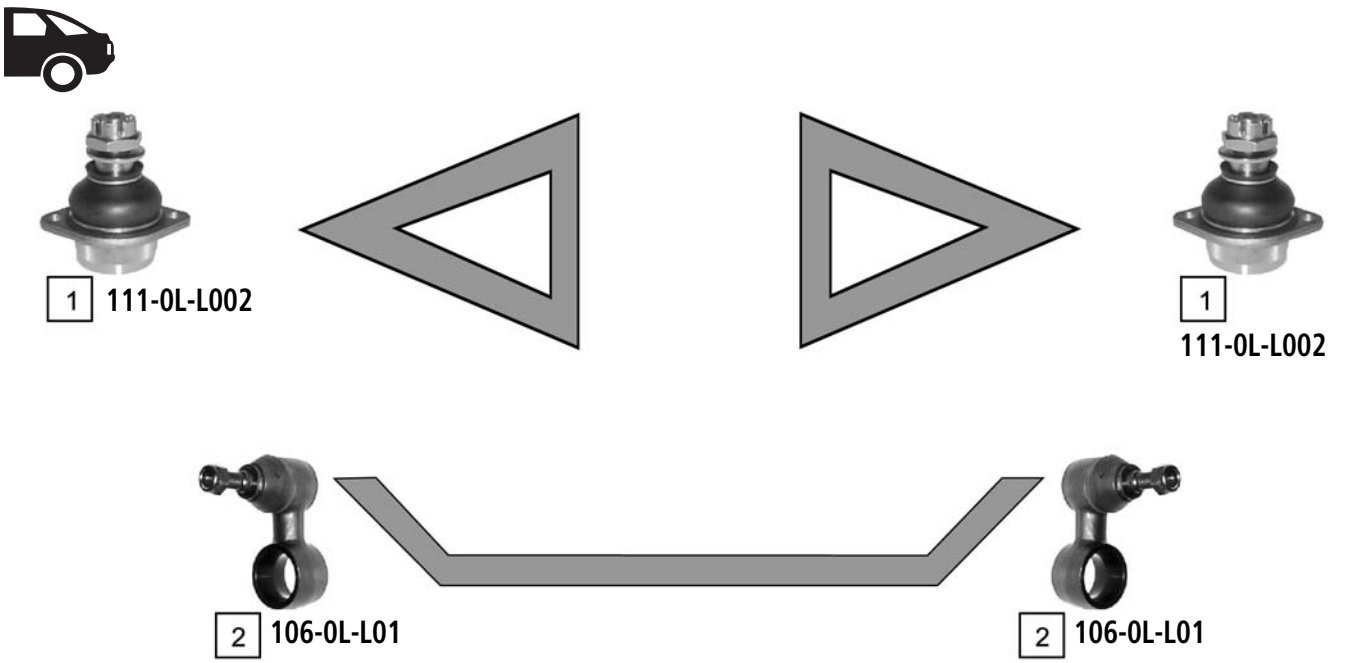

Ref.	ASHIKA CODE	Description	OEM	Measures	Ref	ASHIKA CODE	Description	OEM	Measures
1	**111-0L-L002**	Ball Joint	ANR 1799		4	**111-0L-L005**	Tie Rod End Right	RTC 5869	c:14:8 th:M17R 16G
2	**106-0L-L01**	Stabiliser Link	NTC 1888	L:63	5	**111-0L-L009**	Tie Rod End	NRC 1823	
3	**111-0L-L006**	Tie Rod End Left	RTC 5870	"c:15 th:11/16""x16					

DISCOVERY II (LJ,LT) **06/1994 - 09/2004**

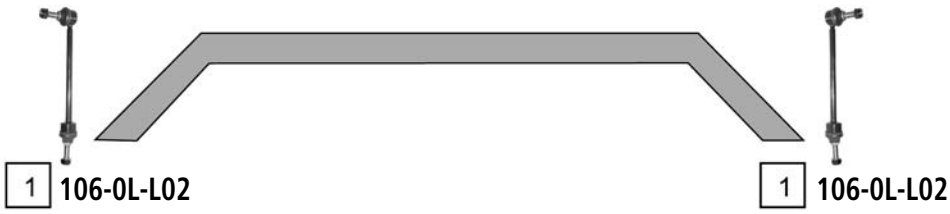

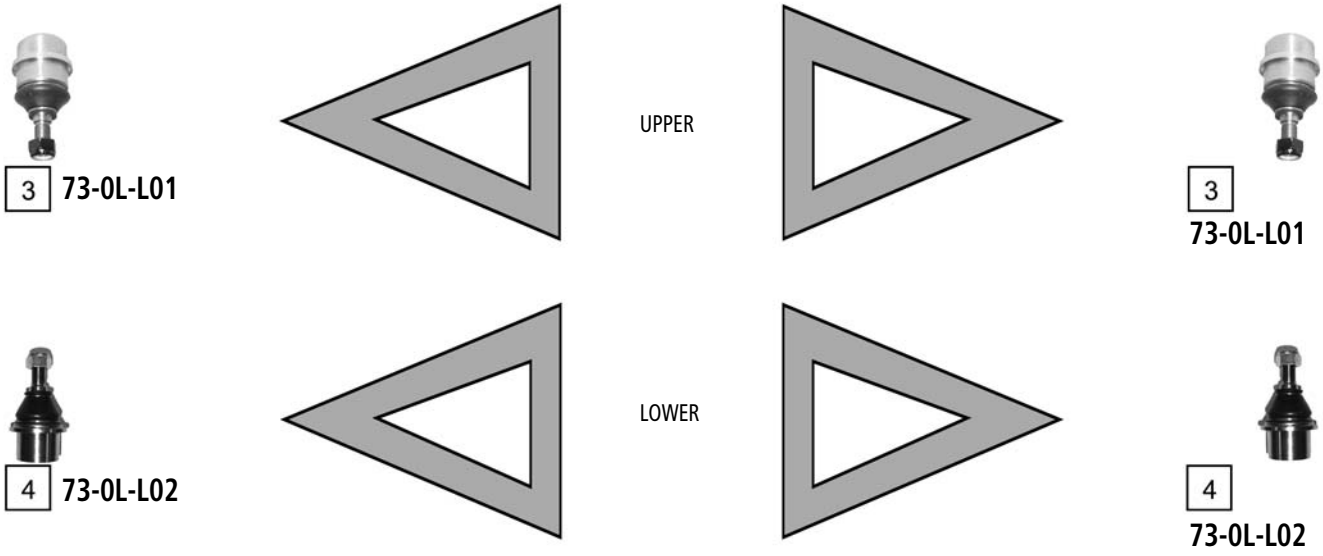

Ref	ASHIKA CODE	Description	OEM	Measures	Ref	ASHIKA CODE	Description	OEM	Measures
1	**106-0L-L02**	Stabiliser Link	RBM100223	L:243.5	5	**111-0L-L010**	Tie Rod End	QFS000010	
2	**106-0L-L03**	Stabiliser Link	RDG100682	L:158.5	6	**27-0L-L02**	Track Rod	TIQ000010	
3	**73-0L-L01**	Ball Joint	FTC 3570	c:16	7	**27-0L-L01**	Track Rod	QHG000050	-
4	**73-0L-L02**	Ball Joint	FTC 3571	c:18.9					

O.E.M. names and numbers are used for reference purposes only Ashika assumes no responsibility for possible errors

DISCOVERY III **10/2004 ->**

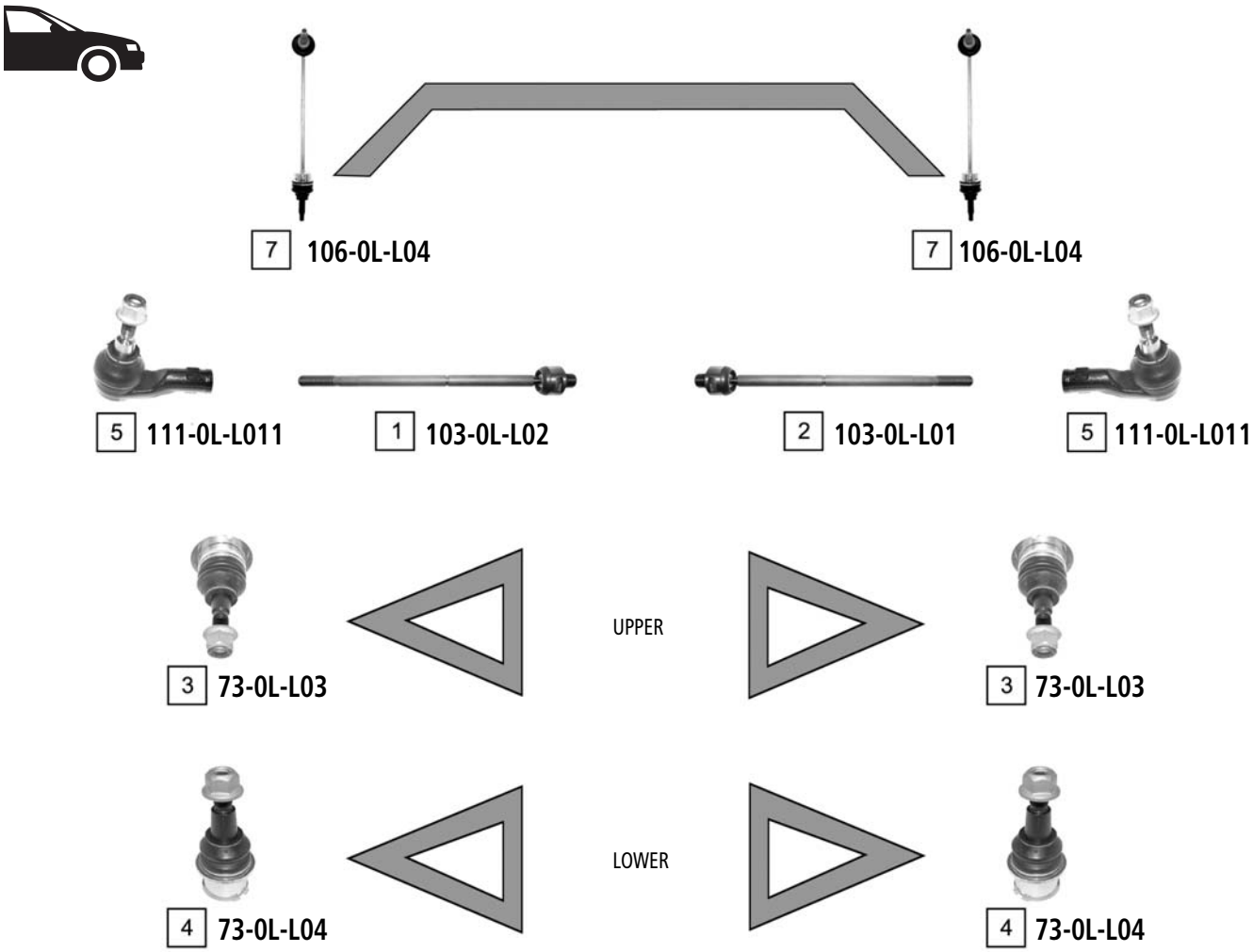

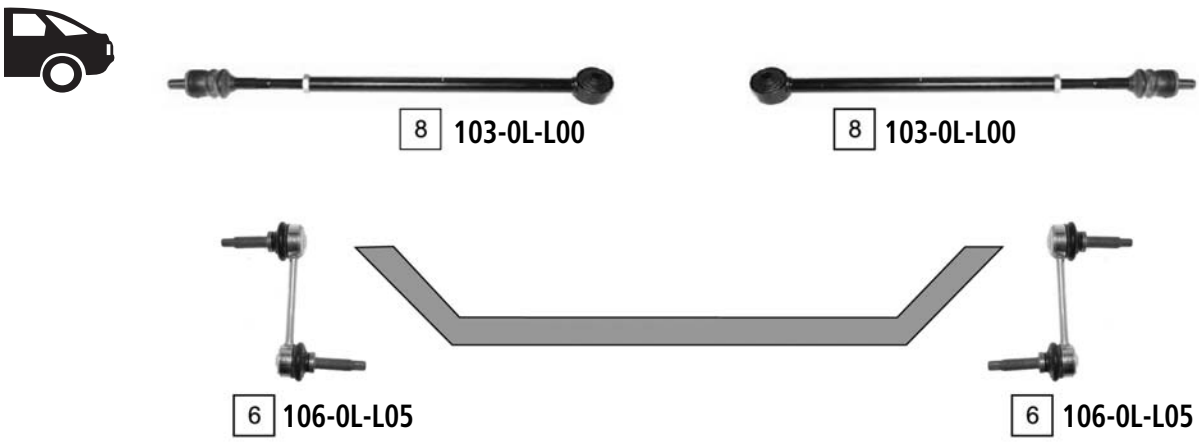

Ref.	ASHIKA CODE	Description	OEM	Measures	Ref	ASHIKA CODE	Description	OEM	Measures
1	**103-0L-L02**	Axial Joint	QFK 500020	L:372	5	**111-0L-L011**	Tie Rod End	QJB 500010	c:16.80
2	**103-0L-L01**	Axial Joint	QFK 500010	-	6	**106-0L-L05**	Stabiliser Link	RGD 000311	L:116
3	**73-0L-L03**	Ball Joint	RBK 500030	c:13.85	7	**106-0L-L04**	Stabiliser Link	RBM 500190	-
4	**73-0L-L04**	Ball Joint	RBK 500040	c:20.65	8	**103-0L-L00**	Tie Rod	RGD 500083	-

FREELANDER **07/1997 - 01/2006**

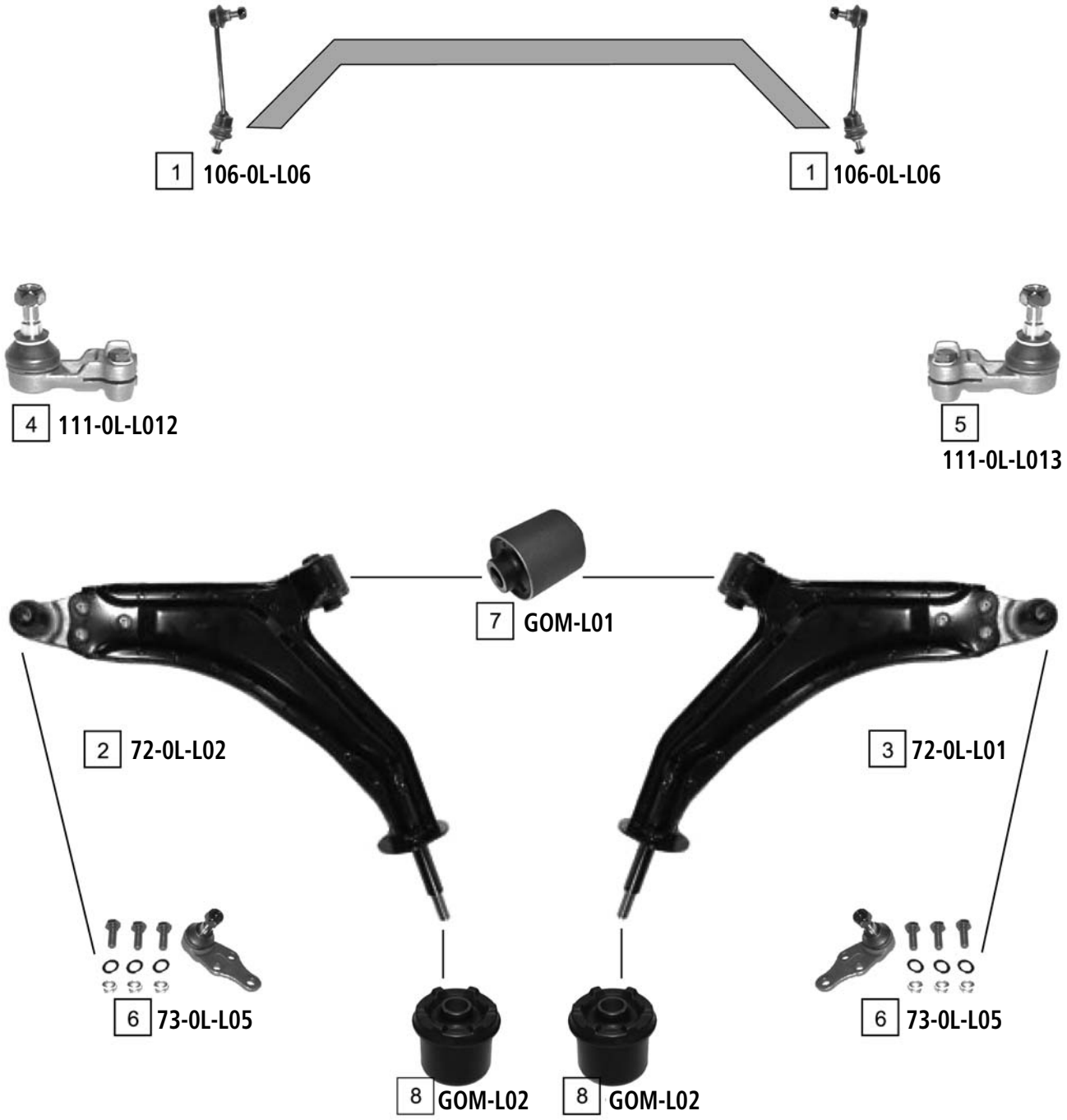

Ref	ASHIKA CODE	Description	OEM	Measures	Ref	ASHIKA CODE	Description	OEM	Measures
1	**106-0L-L06**	Stabiliser Link	RBM 100170	L:177	5	**111-0L-L013**	Tie Rod End Right	QJB 100220	c:14.7 th:FM16X1.5R
2	**72-0L-L02**	TCA Left	RBJ 102450	c:15.4	6	**73-0L-L05**	Ball Joint LOWER	Part of 72-0L-L02/72-0L-L01	c:15
3	**72-0L-L01**	TCA Right	RBJ102440	-	7	**GOM-L01**	Silentblock For Susp.Arm	RBX 101160	d:45.4
4	**111-0L-L012**	Tie Rod End Left	QJB 100230	c:14.7 th:FM16X1.5L	8	**GOM-L02**	Silentblock For Susp.Arm	RBX 101780	-

O.E.M. names and numbers are used for reference purposes only Ashika assumes no responsibility for possible errors

LANDROVER 88-109 **01/1984 - 12/1986**

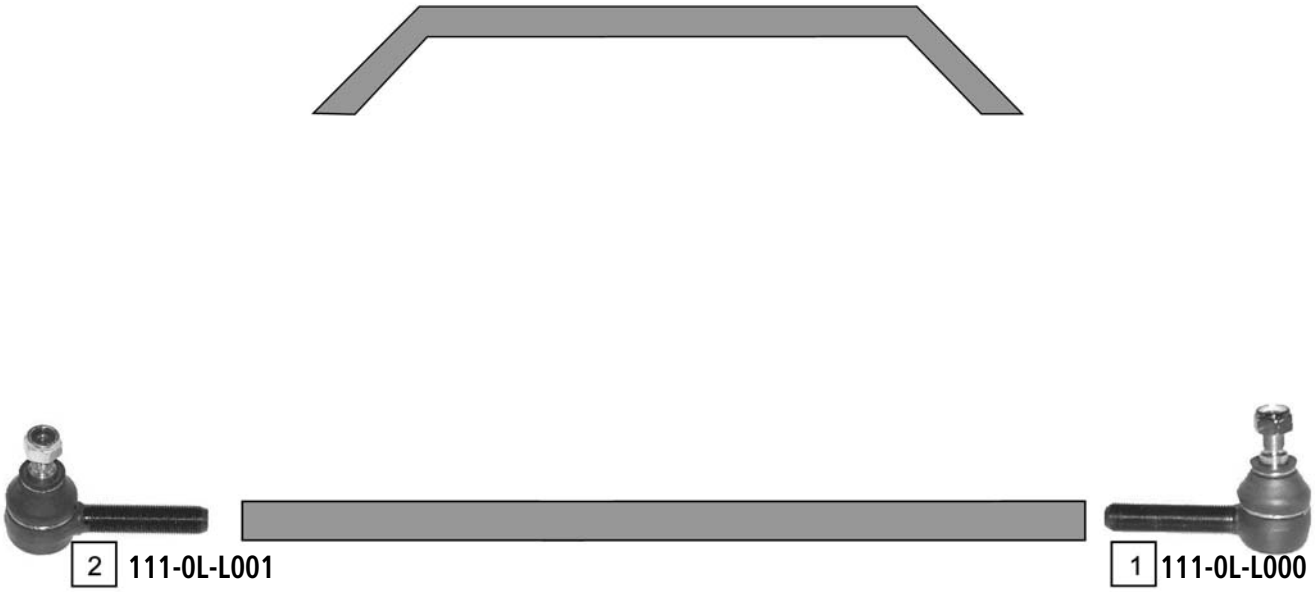

Ref.	ASHIKA CODE	Description	OEM	Measures	Ref	ASHIKA CODE	Description	OEM	Measures
1	**111-0L-L000**	Spoorstangeind Rht	320.901	"c:15.2 th:11/16" "x	2	**111-0L-L001**	Tie Rod End	320.901	"c:15.2 th:11/16" "x

LANDROVER 90-110-130 — **03/1984 - 07/1990**
RANGE ROVER I — **12/1970 - 07/1994**

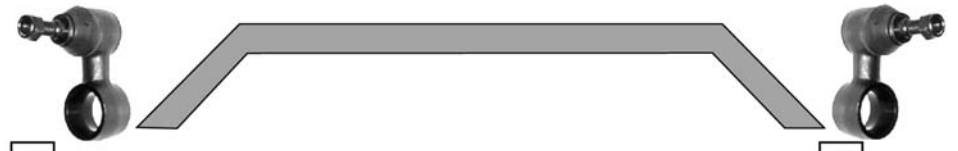

5 106-0L-L01

5 106-0L-L01

2 111-0L-L004

1 111-0L-L003

1 111-0L-L003

4 111-0L-L007

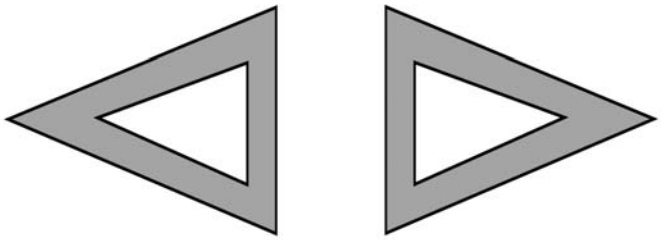

4 111-0L-L007

4 111-0L-L007

4 111-0L-L007

3 111-0L-L002

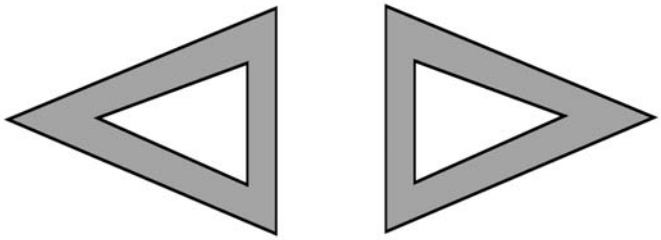

3 111-0L-L002

5 106-0L-L01

5 106-0L-L01

Ref	ASHIKA CODE	Description	OEM	Measures	Ref	ASHIKA CODE	Description	OEM	Measures
1	**111-0L-L003**	Tie Rod End	NRC 6007	"c:15 th:11/16""x16	4	**111-0L-L007**	Ball Joint UPPER And LOWER	575 882	c:23.3
2	**111-0L-L004**	Tie Rod End	NRC 4745	"c:15 th:11/16""x16	5	**106-0L-L01**	Stabiliser Link	NTC 1888	L:63
3	**111-0L-L002**	Ball Joint Rear	ANR 1799	c:23.4					

O.E.M. names and numbers are used for reference purposes only Ashika assumes no responsibility for possible errors

RANGE ROVER II (LP) **07/1994 - 03/2002**

1 106-0L-L07

1 106-0L-L07

4 111-0L-L014

4 111-0L-L014

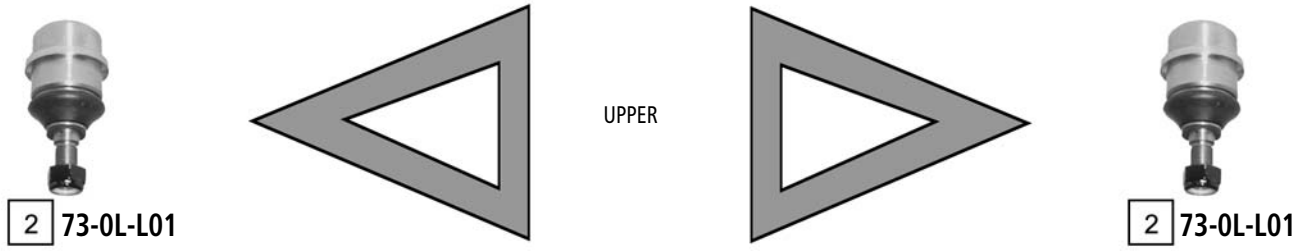

2 73-0L-L01

2 73-0L-L01

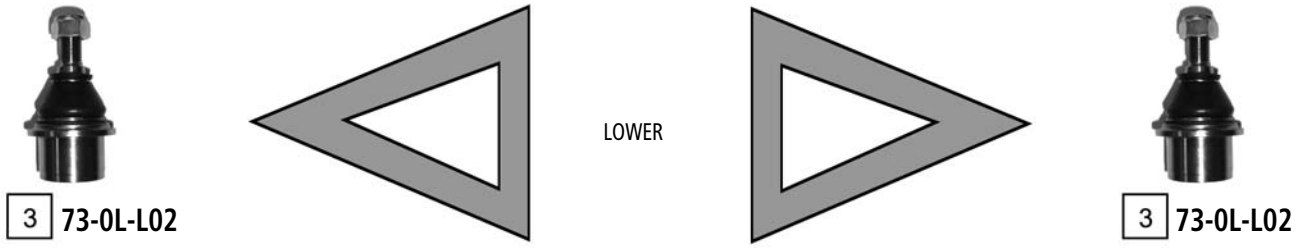

3 73-0L-L02

3 73-0L-L02

Ref.	ASHIKA CODE	Description	OEM	Measures	Ref	ASHIKA CODE	Description	OEM	Measures
1	106-0L-L07	Stabiliser Link	ANR 3304	L:97	3	73-0L-L02	Ball Joint	FTC 3571	c:18.9
2	73-0L-L01	Ball Joint	FTC 3570	c:16	4	111-0L-L014	Tie Rod End	STC 1871	c:14.1 th:MM18X1.5L

RANGE ROVER III (LM) **03/2002 ->**

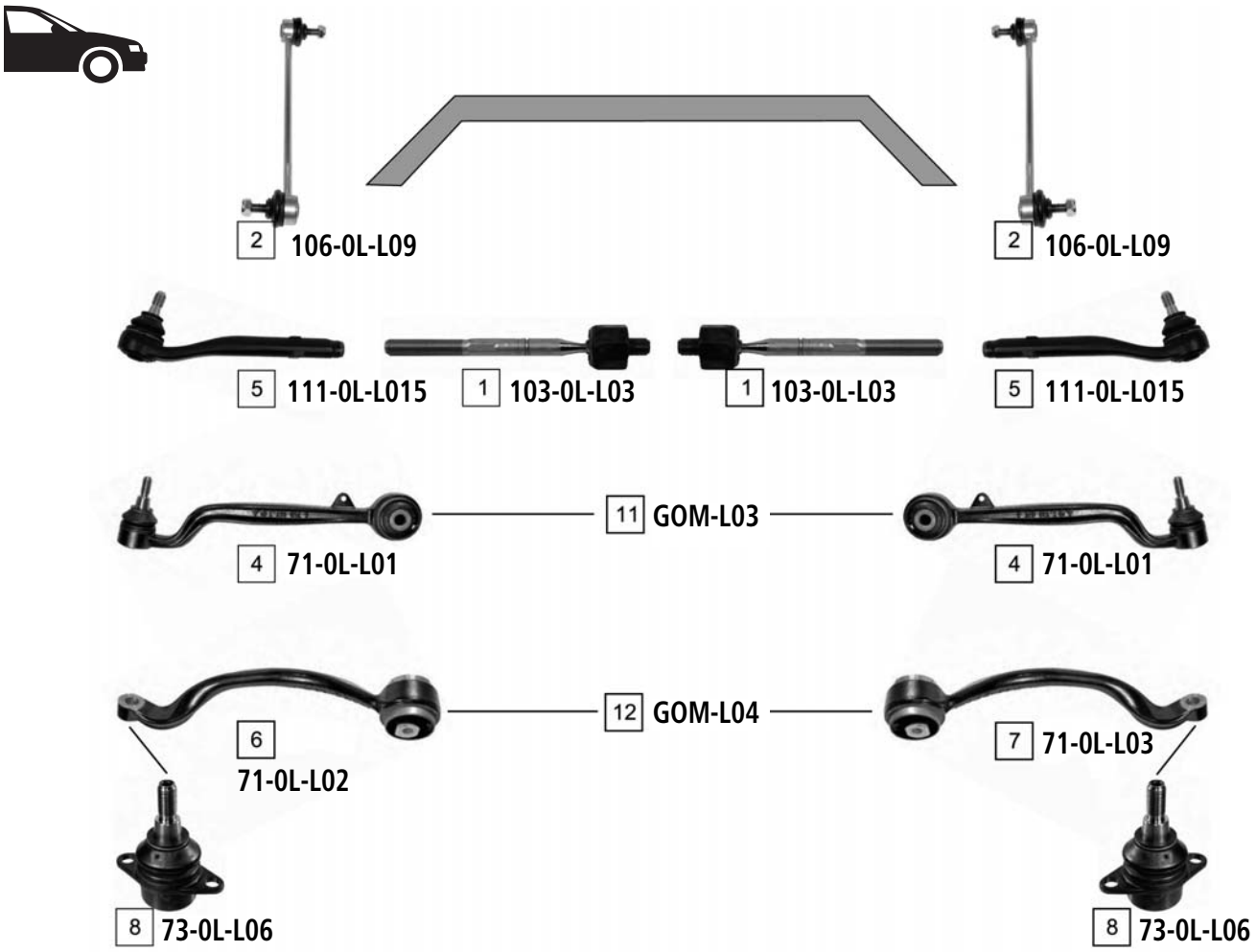

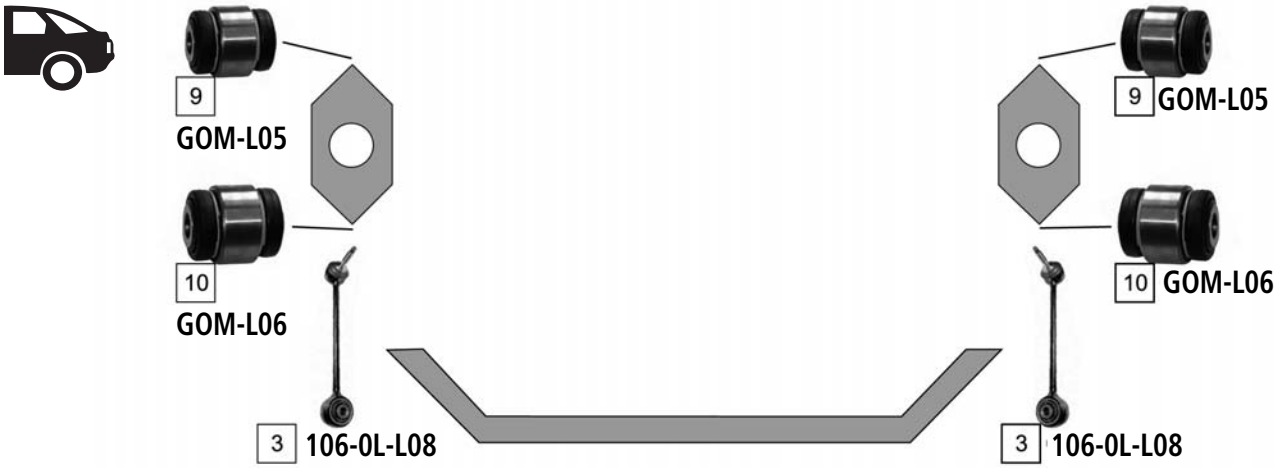

Ref	ASHIKA CODE	Description	OEM	Measures	Ref	ASHIKA CODE	Description	OEM	Measures
1	103-0L-L03	Axial Joint	TIQ 000040		7	71-0L-L03	TCA Right	RBJ 000120	
2	106-0L-L09	Stabiliser Link	RBM 000011	L:380	8	73-0L-L06	Ball Joint	RBK 500150	
3	106-0L-L08	Stabiliser Link	RGD 000180		9	GOM-L05	Ball Joint	RHF 000260	
4	71-0L-L01	TCA	RBJ 500710		10	GOM-L06	Ball Joint	RBK 000042	
5	111-0L-L015	Tie Rod End	TIQ 000030		11	GOM-L03	Silentblock For Susp.Arm	RBX 000070	
6	71-0L-L02	TCA Left	RBJ 000130	-	12	GOM-L04	Silentblock For Susp.Arm	RBX 000200	

O.E.M. names and numbers are used for reference purposes only Ashika assumes no responsibility for possible errors

RANGE ROVER SPORT 02/2005 ->

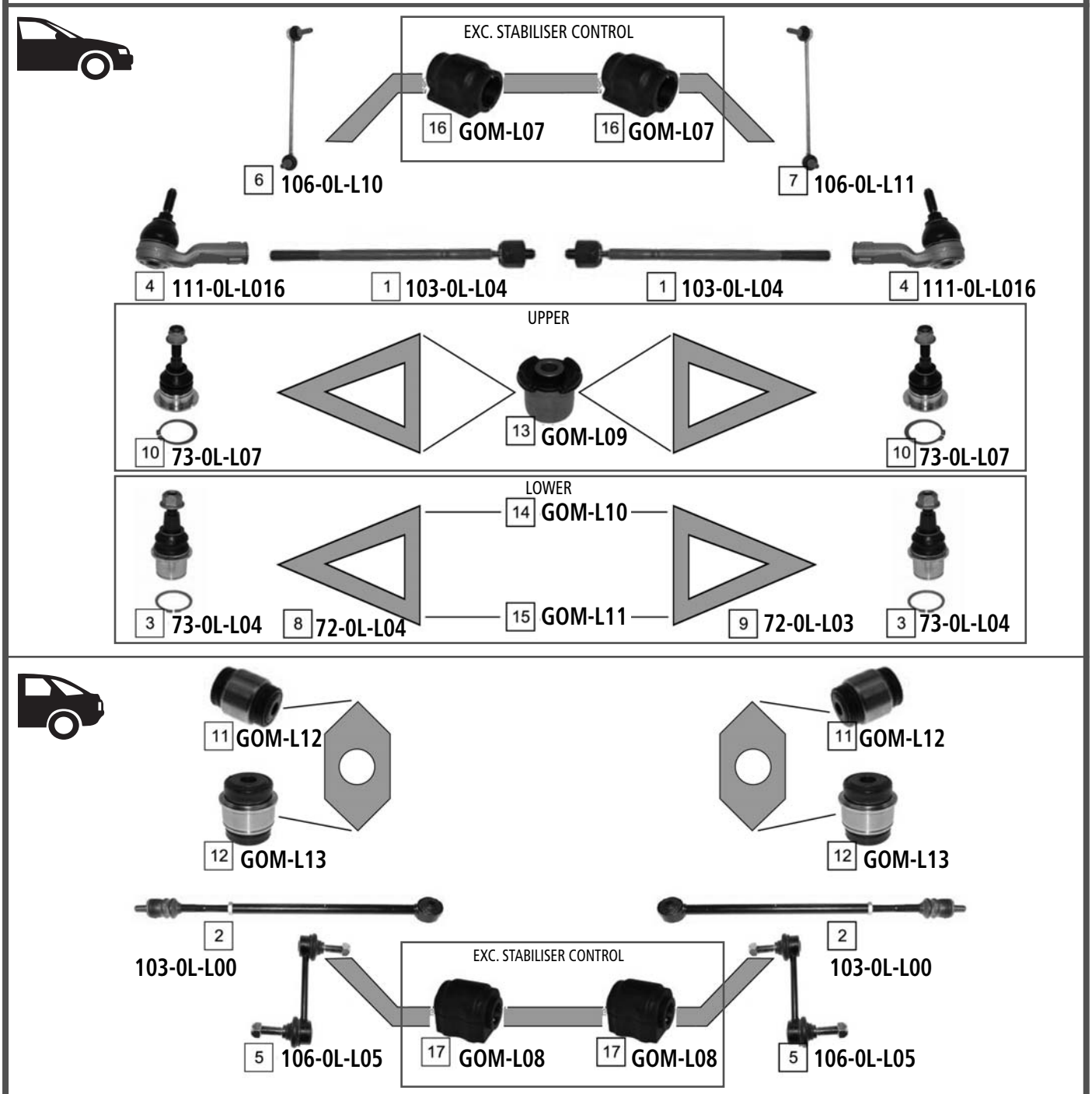

Ref.	ASHIKA CODE	Description	OEM	Measures	Ref	ASHIKA CODE	Description	OEM	Measures
1	103-0L-L04	Axial Joint	QFK 500030	th:MM16X1.5R L:365	10	73-0L-L07	Ball Joint	RBK 500170	c:13.8
2	103-0L-L00	Tie Rod	RGD 500083	-	11	GOM-L12	Ball Joint	RHF 500031	-
3	73-0L-L04	Ball Joint	RBK 500040	c:20.65	12	GOM-L13	Ball Joint	RBK 500012	-
4	111-0L-L016	Tie Rod End	QJB 500040	c:16.8 th:FM16X1.5R	13	GOM-L09	Silentblock For Susp.Arm	RBX 500443	d:14.3
5	106-0L-L05	Stabiliser Link	RGD 000311	L:116	14	GOM-L10	Silentblock For Susp.Arm	RBX 500432	-
6	106-0L-L10	Stabiliser Link Left	RBM 500150	L:345	15	GOM-L11	Silentblock For Susp.Arm	RBX 500531	-
7	106-0L-L11	Stabiliser Link Right	RBM 500140	L:345	16	GOM-L07	Stabiliser Mounting	RBX 500280	d:30
8	72-0L-L04	TCA Left	RBJ 500456	-	17	GOM-L08	Stabiliser Mounting	RGX 500070	d:23
9	72-0L-L03	TCA Right	RBJ 500446	-					

GOA 01/2007 ->

2 106-00-002

1 106-00-001

3 111-00-004

3 111-00-004

4 73-00-004

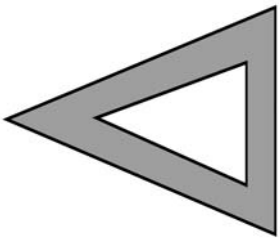

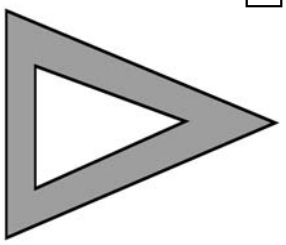

4 73-00-004

5 73-00-005

5 73-00-005

Ref	ASHIKA CODE	Description	OEM	Measures	Ref	ASHIKA CODE	Description	OEM	Measures
1	106-00-001	Stabiliser Link Right	0401EA0360N		4	73-00-004	Ball Joint	0401BA0140N	
2	106-00-002	Stabiliser Link Left	0401EA0370N		5	73-00-005	Ball Joint	0401BA0280N	
3	111-00-004	Tie Rod End							

O.E.M. names and numbers are used for reference purposes only Ashika assumes no responsibility for possible errors

121 I (DA) 10/1987 - 10/1990

1 111-03-325

2 103-0K-K53

2 103-0K-K53

1 111-03-325

3 73-0K-K52

3 73-0K-K52

Ref	ASHIKA CODE	Description	OEM	Measures	Ref	ASHIKA CODE	Description	OEM	Measures
1	**111-03-325**	Tie Rod End	8AB1-32-280	c:12.6 th:FM12X1.25	3	**73-0K-K52**	TCA	KKY01-34-390A	c:16
2	**103-OK-K53**	Axial Joint	KK150-32-240	th:MM16X1.5R L:265					

121 II (DB) **10/1990 - 03/1996**

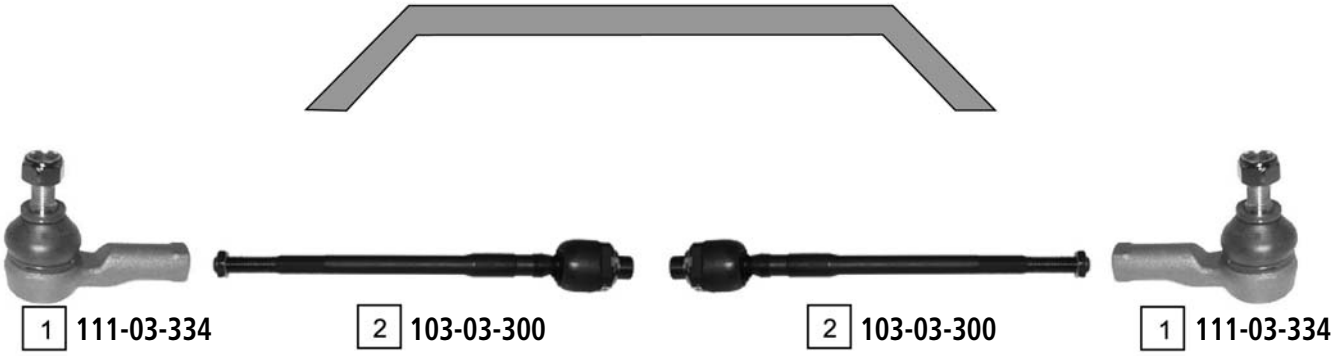

Ref.	ASHIKA CODE	Description	OEM	Measures	Ref	ASHIKA CODE	Description	OEM	Measures
1	**111-03-334**	Tie Rod End	8AB2-32-280	c:13.3 th:FM12X1.25	2	**103-03-300**	Axial Joint	D06132248A	th:MM17X1R L:279

O.E.M. names and numbers are used for reference purposes only Ashika assumes no responsibility for possible errors

121 III (JASM,JBSM) 03/1996 - 10/2002

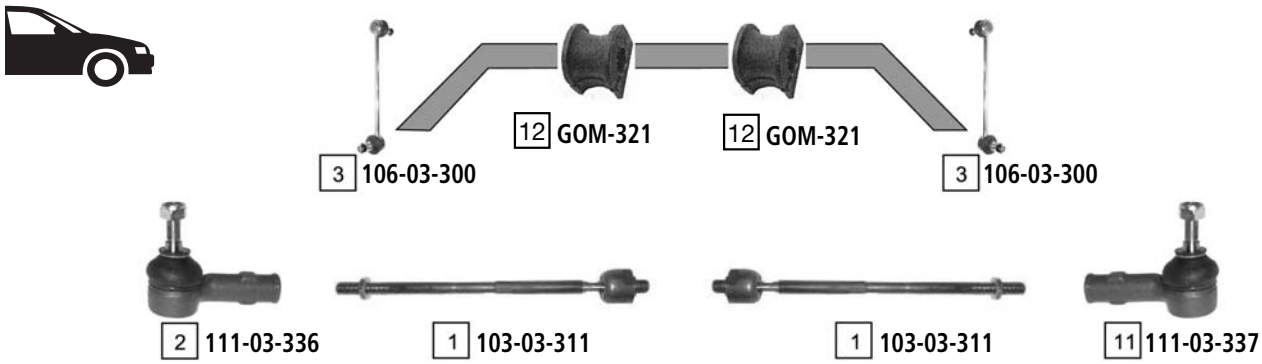

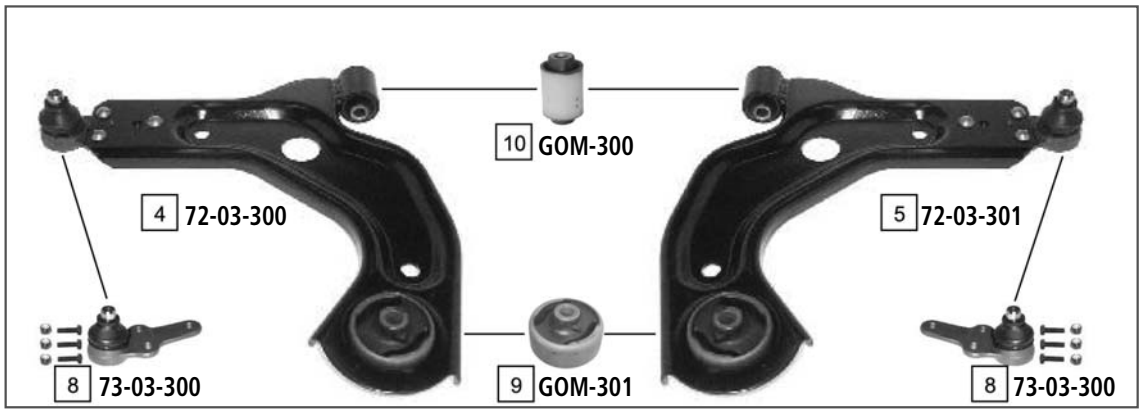

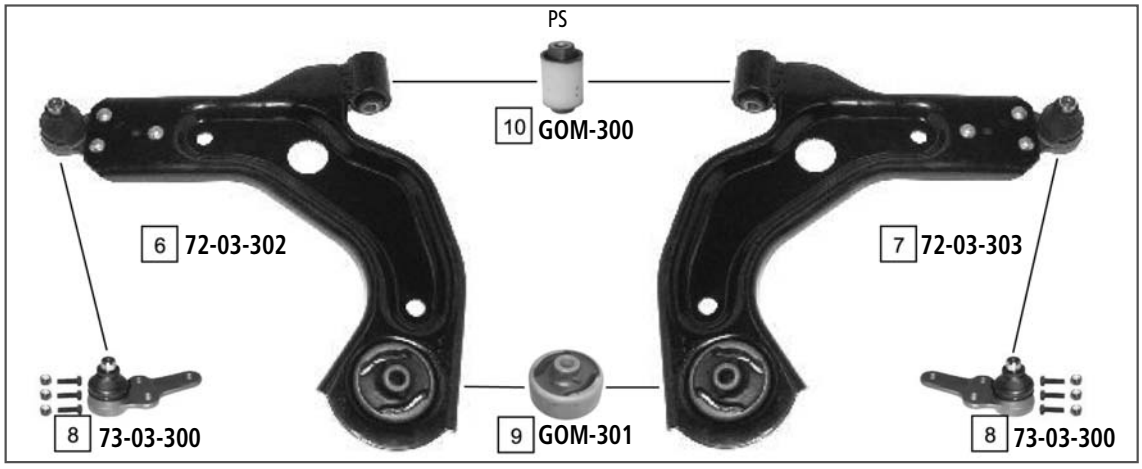

Ref	ASHIKA CODE	Description	OEM	Measures	Ref	ASHIKA CODE	Description	OEM	Measures
1	**103-03-311**	Axial Joint	1044014	th:MM14X1.5R L:310	8	**73-03-300**	Ball Joint	94FB 33 95A2B	c:16.5
2	**111-03-336**	Tie Rod End Left	1 020 174	c:11.5 th:M14X2R	9	**GOM-301**	Silentblock For Susp.Arm	1E01 34 153A	d:66.1
3	**106-03-300**	Stabiliser Link	1 015 265	L:238	10	**GOM-300**	Silentblock For Susp.Arm	1 010 037	d:37.3
4	**72-03-300**	TCA Left	1E00 34 350A	c:16.5	11	**111-03-337**	Tie Rod End Right	1011857	c:11.5 th:M14X2R
5	**72-03-301**	TCA Right	1E00 34 300A	c:17.45	12	**GOM-321**	Stabiliser Mounting	1E00-34-156	
6	**72-03-302**	TCA Left	1 063 255	c:16.5	13	**GOM-322**	Mounting Axle Body	1E00-28-460C	-
7	**72-03-303**	TCA Right	1 063 236	c:16.5					

323 II (BD) **06/1980 - 04/1985**

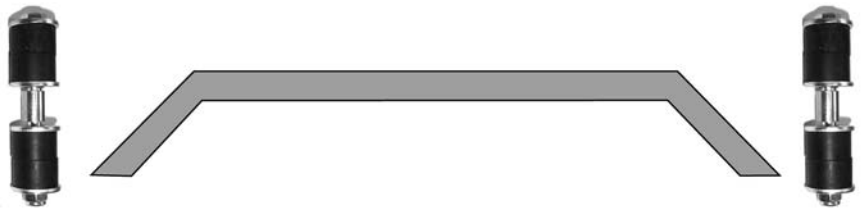

1 **106-03-301** 1 **106-03-301**

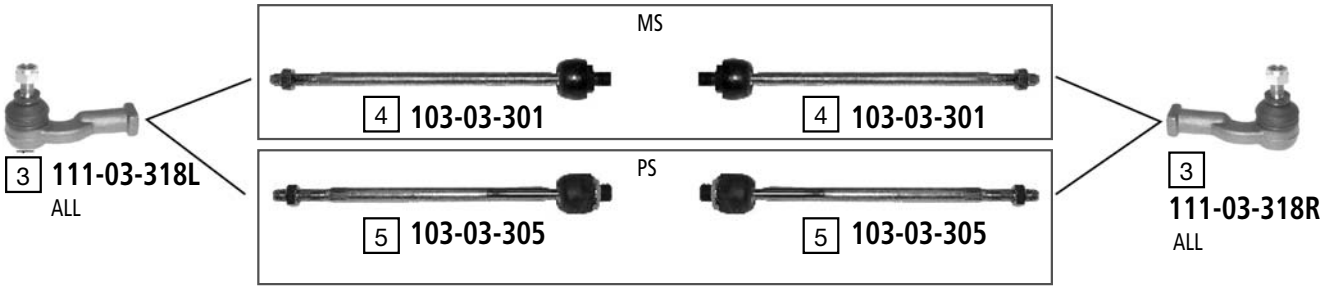

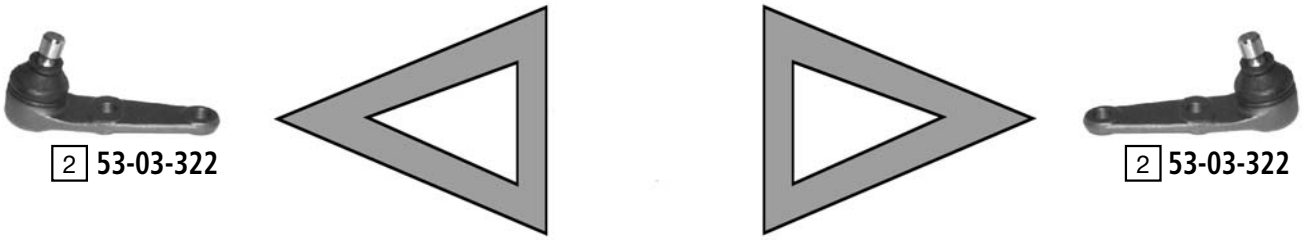

2 **53-03-322** 2 **53-03-322**

Ref	ASHIKA CODE	Description	OEM	Measures	Ref	ASHIKA CODE	Description	OEM	Measures
1	**106-03-301**	Stabiliser Link	B02934159	L:110	4	**103-03-301**	Axial Joint	B001-32-135	
2	**53-03-322**	Ball Joint Lower	B092-34-550	c:16	5	**103-03-305**	Axial Joint	BA2932-135	
3	**111-03-318L**	Tie Rod End Left	B067-99-324	c:12.7 th:FM12X1.25	6	**111-03-318R**	Tie Rod End Right	B001-99324	

O.E.M. names and numbers are used for reference purposes only Ashika assumes no responsibility for possible errors

323 III (BF) 05/1985 - 05/1989
323 III S.W. (BW) 05/1986 - 10/1995

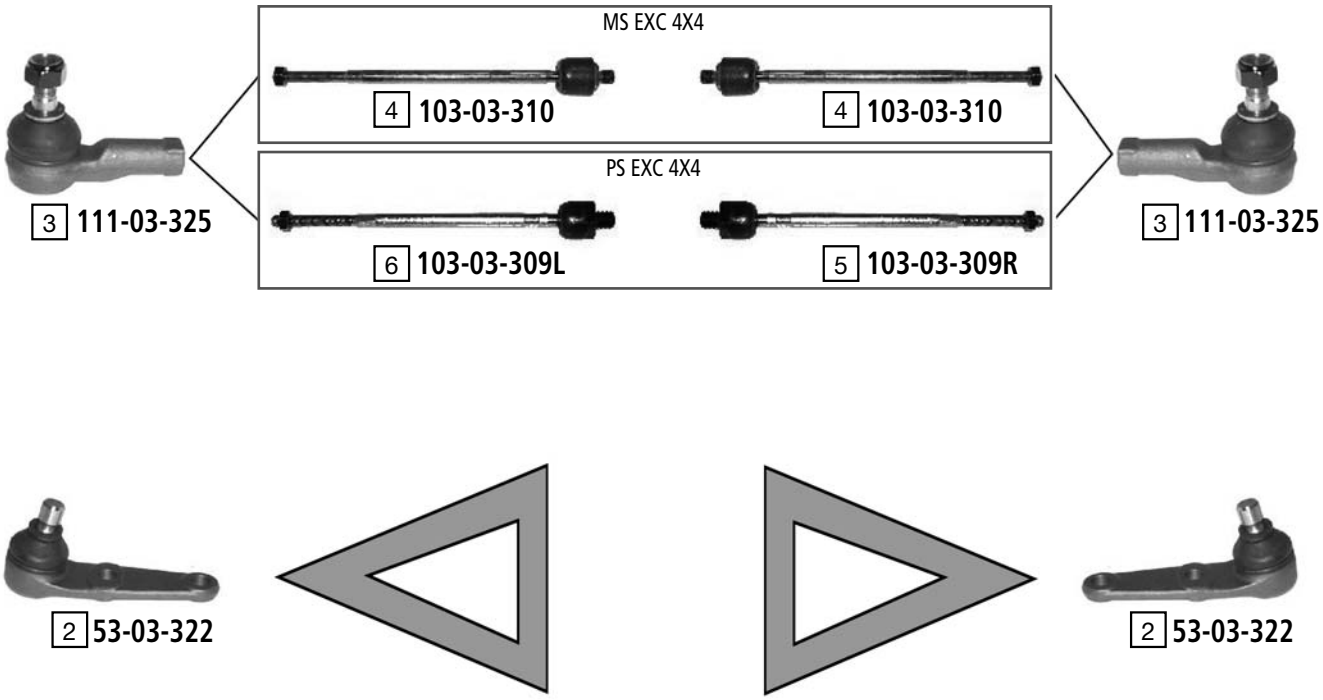

Ref.	ASHIKA CODE	Description	OEM	Measures	Ref	ASHIKA CODE	Description	OEM	Measures
1	106-03-301	Stabiliser Link	BO2934159	L:110	4	103-03-310	Axial Joint	BF67-32-24X	
2	53-03-322	Ball Joint Lower	B092-34-550	c:16	5	103-03-309R	Axial Joint	B093-32-240	
3	111-03-325	Tie Rod End	8AB1-32-280	c:12.6 th:FM12X1.25	6	103-03-309L	Axial Joint		

323 IV (BG) **06/1989 - 08/1994**

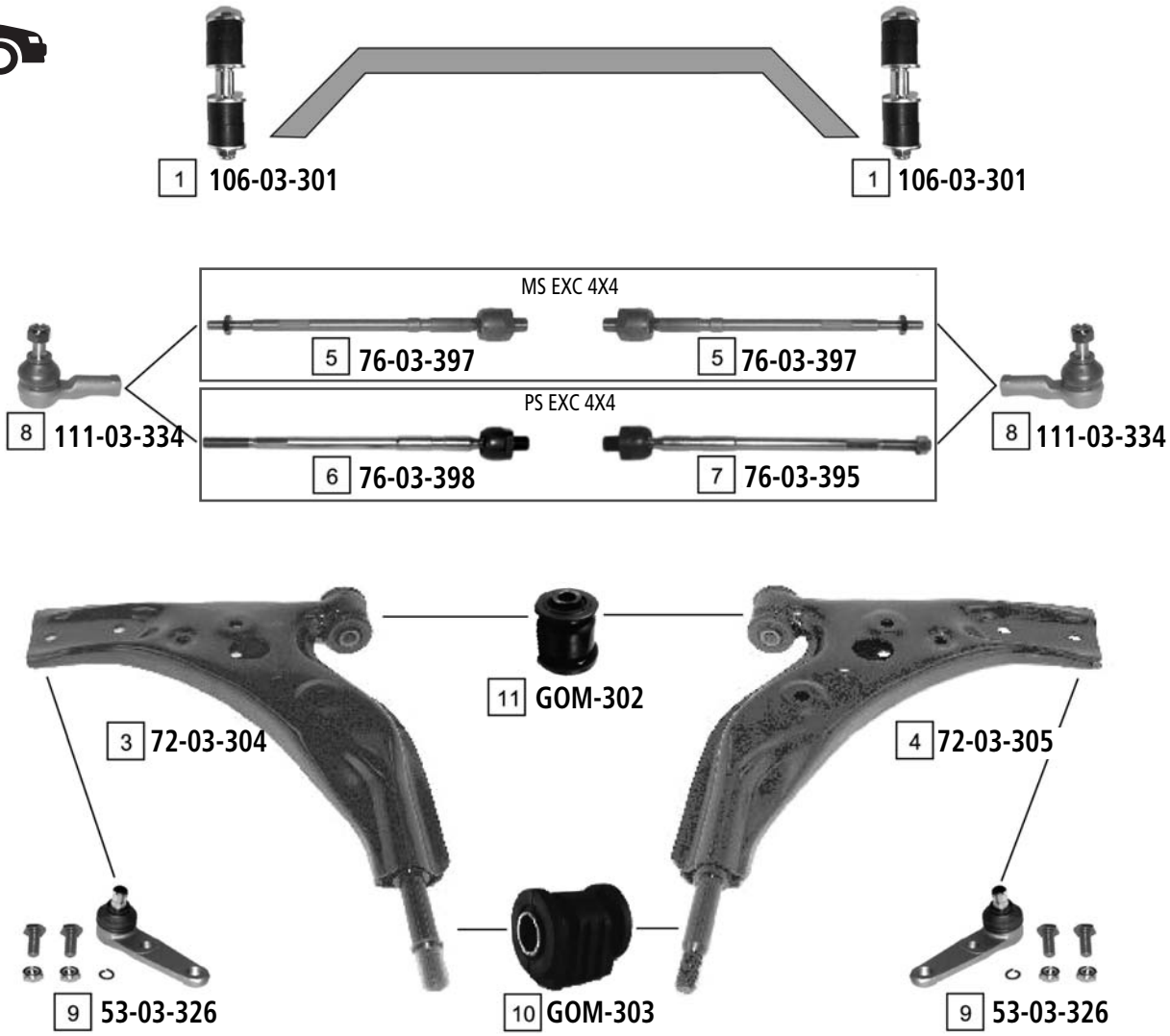

Ref	ASHIKA CODE	Description	OEM	Measures	Ref	ASHIKA CODE	Description	OEM	Measures
1	**106-03-301**	Stabiliser Link	B02934159	L:110	7	**76-03-395**	Axial Joint	B456-32-24X	th:MM16X1R L:324
2	**106-03-302**	Stabiliser Link	8AG1 28 100A	L:105	8	**111-03-334**	Tie Rod End	8AB2-32-280	c:13.3 th:FM12X1.25
3	**72-03-304**	TCA Left	B455-34350E		9	**53-03-326**	Ball Joint LOWER	B455-34-550	c:16
4	**72-03-305**	TCA Right	B455-34-300E		10	**GOM-303**	Silentblock For Susp.Arm	B001-34-470	
5	**76-03-397**	Axial Joint	B455-32-24X	th:MM16X1R L:325	11	**GOM-302**	Silentblock For Susp.Arm	B459-34-470	
6	**76-03-398**	Axial Joint	B456-32-25X	th:MM16X1R L:325					

O.E.M. names and numbers are used for reference purposes only Ashika assumes no responsibility for possible errors

323 V (BA) 08/1994 - 09/1998

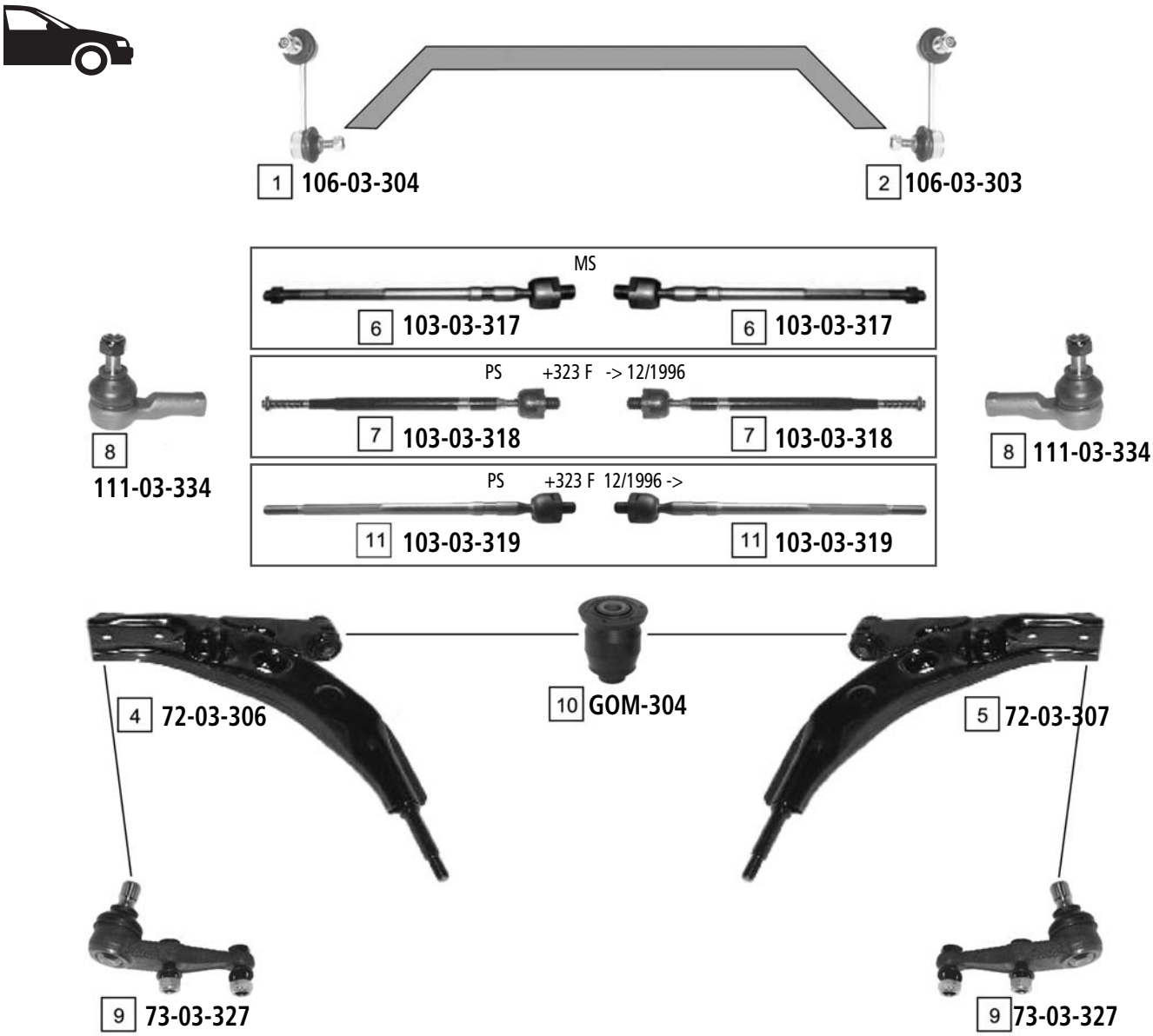

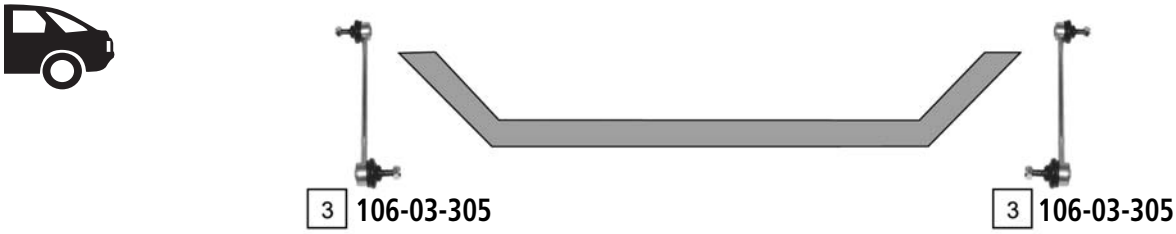

Ref.	ASHIKA CODE	Description	OEM	Measures	Ref	ASHIKA CODE	Description	OEM	Measures
1	106-03-304	Stabiliser Link Left	GA2A 34 170A	L:105	7	103-03-318	Axial Joint	E016 32 24X	th:MM16X1R L:334
2	106-03-303	Stabiliser Link Right	GA2A 34 150A	L:105	8	111-03-334	Tie Rod End	8AB2-32-280	c:13.3 th:FM12X1.25
3	106-03-305	Stabiliser Link	BC1D 28 170A	L:255	9	73-03-327	Ball Joint	B01A 34 550	c:18
4	72-03-306	TCA	B01A 34 350		10	GOM-304	Silentblock For Susp.Arm	BC1D 34 470	d:40.5
5	72-03-307	TCA	B01A 34 300		11	103-03-319	Axial Joint	B21H 32 24X	th:MM14X1.5R L:335
6	103-03-317	Axial Joint	E016 32 250	th:MM16X1R L:335					

323 VI (BJ) **09/1998 - 05/2004**

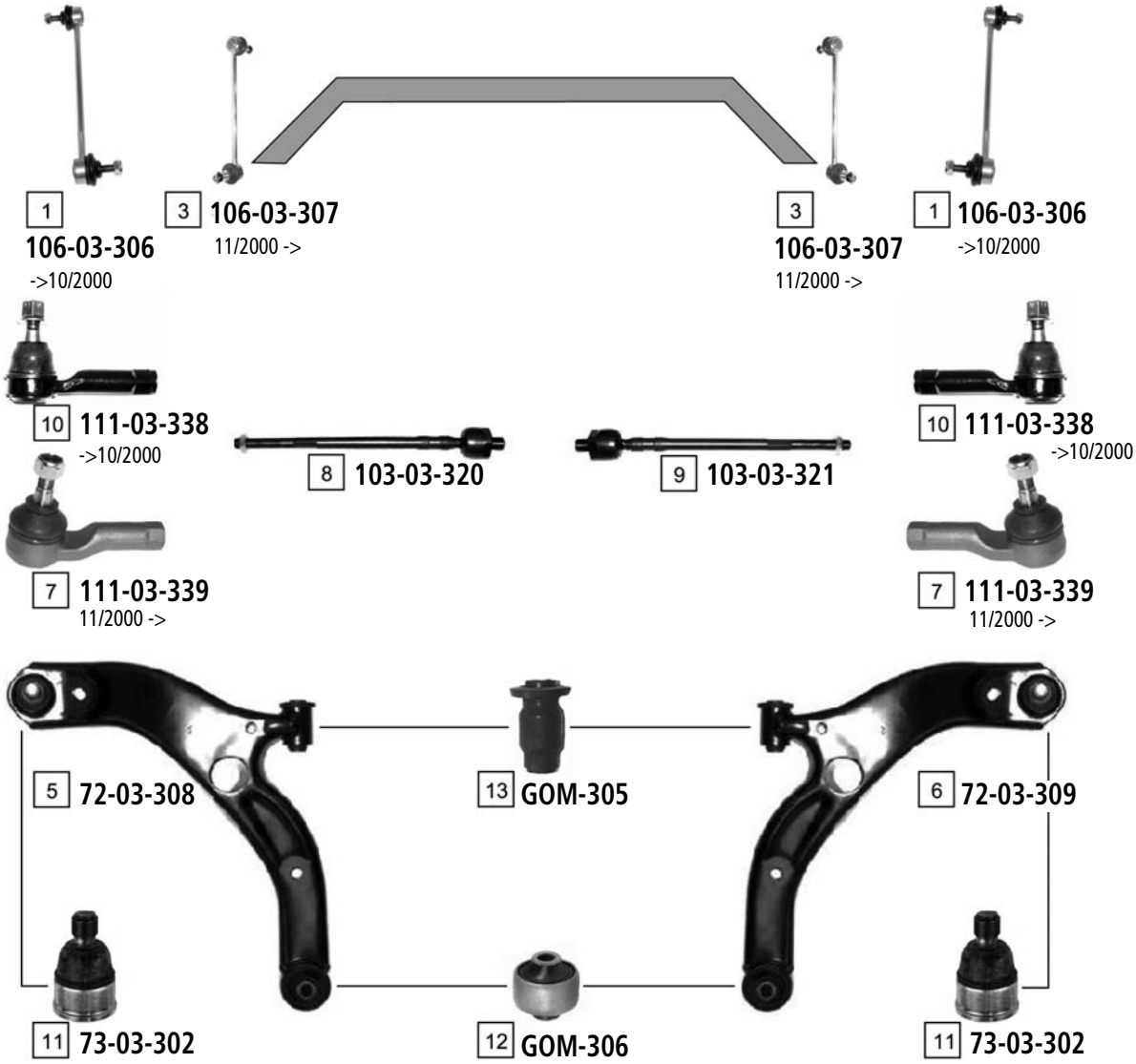

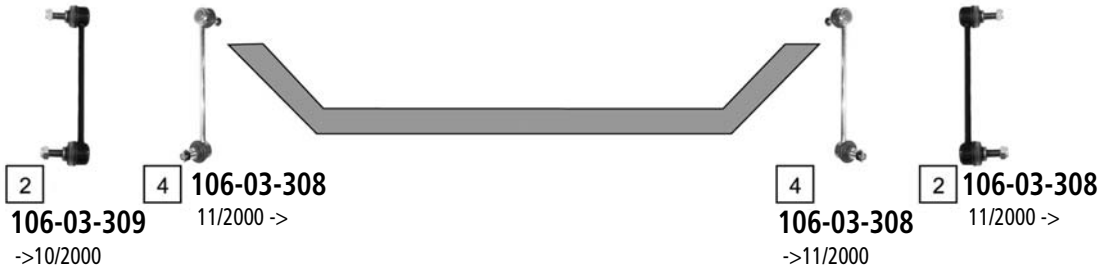

Ref	ASHIKA CODE	Description	OEM	Measures	Ref	ASHIKA CODE	Description	OEM	Measures
1	106-03-306	Stabiliser Link	B26 R 34 170	L:190	8	103-03-320	Axial Joint	B25D 32 240	th:MM16X1R L:310
2	106-03-309	Stabiliser Link	B26R-28-170	L:190	9	103-03-321	Axial Joint	B25D 32 250	th:MM16X1R L:310
3	106-03-307	Stabiliser Link	LC62-34-170 A	L:266	10	111-03-338	Tie Rod End	8AG4 32 280	
4	106-03-308	Stabiliser Link	B30H 28 170 B	L:160	11	73-03-302	Ball Joint	Part of 72-03-308 / 72-03-309	c:18
5	72-03-308	TCA Left	B25D 34 350 A		12	GOM-306	Silentblock For Susp.Arm	B25D 34 460	
6	72-03-309	TCA Right	B25D 34 300 A		13	GOM-305	Silentblock For Susp.Arm	B25D 34 470	
7	111-03-339	Tie Rod End	8AG3-32-280	c:12.9 th:FM14X1.5R					

O.E.M. names and numbers are used for reference purposes only Ashika assumes no responsibility for possible errors

626 III (GD) 07/1987 - 05/1992

4 111-03-339
08/1989->

3 111-03-309
-> 07/1989

MS

2 103-03-399

2 103-03-399

PS

1 103-03-302R

1 103-03-302R

4 111-03-339
08/1989->

3 111-03-309
-> 07/1989

5 73-03-317

5 73-03-317

6 106-03-302

6 106-03-302

Ref	ASHIKA CODE	Description	OEM	Measures	Ref	ASHIKA CODE	Description	OEM	Measures
1	**103-03-302R**	Axial Joint	GJ22-32-240	th:MM18X1.5R L:285	4	**111-03-339**	Tie Rod End	8AG3-32-280	c:12.9 th:FM14X1.5R
2	**103-03-399**	Axial Joint	G030-32-250A	th:MM16X1R L:282	5	**73-03-317**	Ball Joint Lower	0G030 34550B	c:18
3	**111-03-309**	Tie Rod End	H001-99-324	c:13.6 th:FM14X1.5R	6	**106-03-302**	Stabiliser Link	8AG1 28 100A	L:105

626 IV (GE) 08/1991 - 04/1997

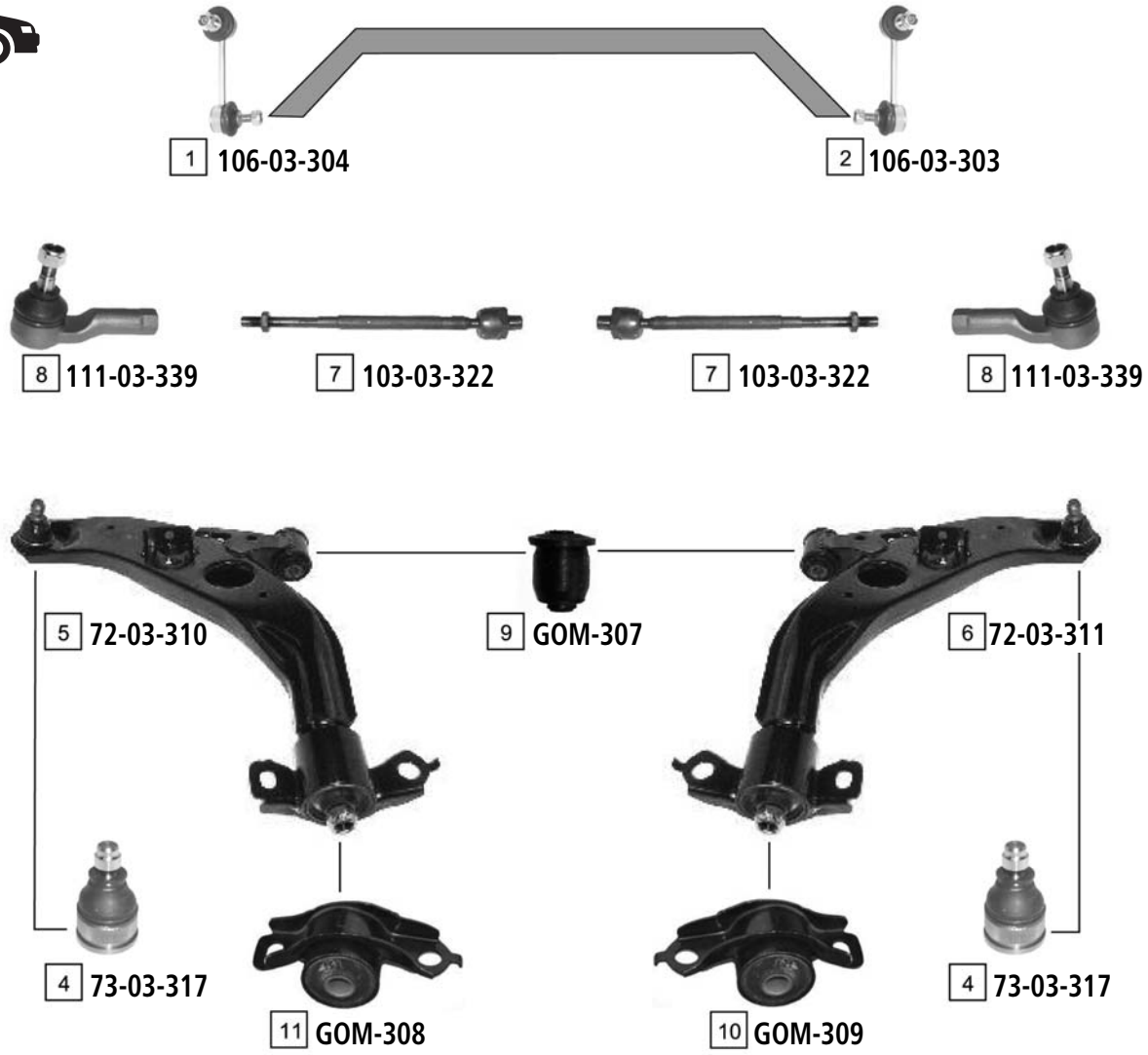

Ref.	ASHIKA CODE	Description	OEM	Measures	Ref	ASHIKA CODE	Description	OEM	Measures
1	**106-03-304**	Stabiliser Link Left	GA2A 34 170A	L:105	7	**103-03-322**	Axial Joint	GA2A-32-250	th:MM18X1R L:300
2	**106-03-303**	Stabiliser Link Right	GA2A 34 105A	L:105	8	**111-03-339**	Tie Rod End	8AG3-32-280	c:12.9 th:FM14X1.5R
3	**106-0K-K51**	Stabiliser Link	GA2C-28-170B	L:88	9	**GOM-307**	Silentblock For Susp.Arm	GA2A 34 470	d:38.5
4	**73-03-317**	Ball Joint LOWER	0G030 34550B	c:18	10	**GOM-309**	Silentblock For Susp.Arm	GA2A 34 46XA	
5	**72-03-310**	TCA	GA2A-34-350	c:18	11	**GOM-308**	Silentblock For Susp.Arm	GA2A 34 46YA	
6	**72-03-311**	TCA	GA2A-34-300	c:18					

O.E.M. names and numbers are used for reference purposes only Ashika assumes no responsibility for possible errors

626 V (GF) 05/1997 - 04/2002

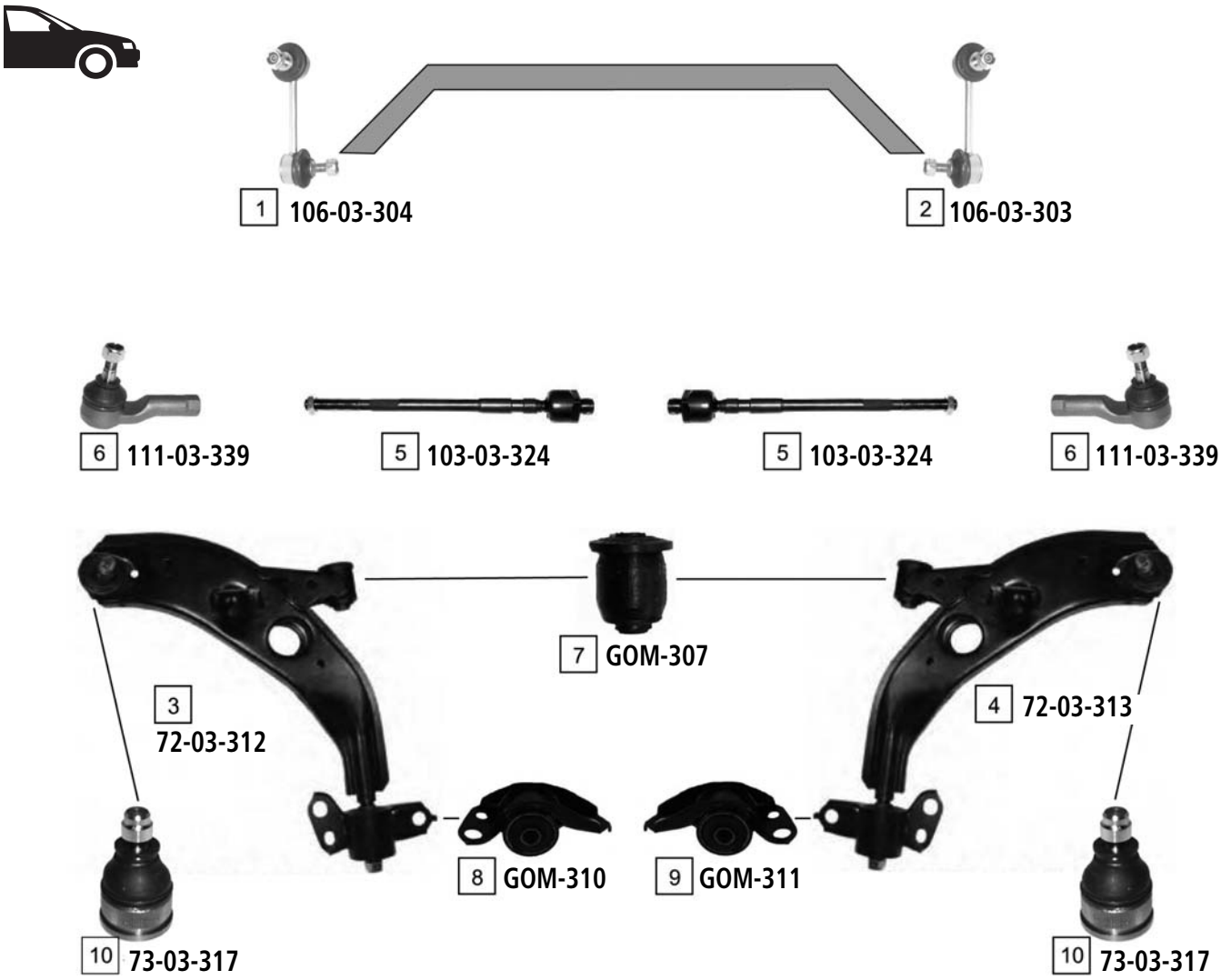

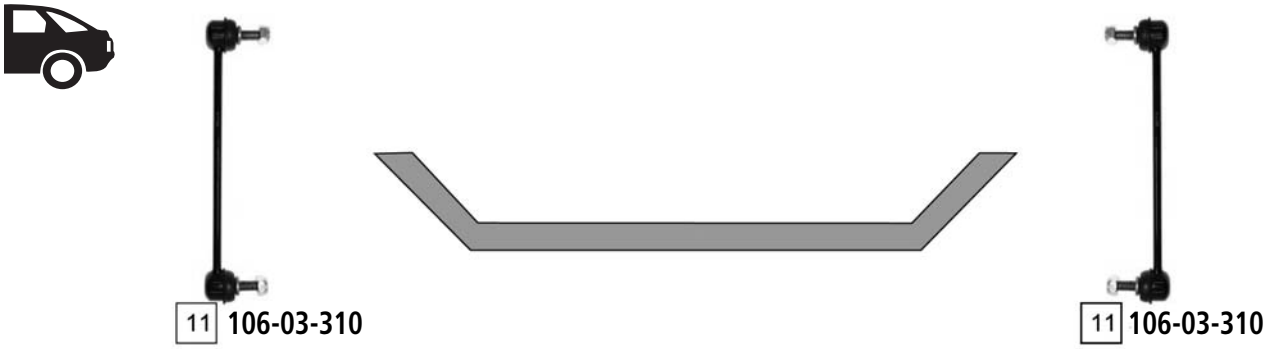

Ref	ASHIKA CODE	Description	OEM	Measures	Ref	ASHIKA CODE	Description	OEM	Measures
1	**106-03-304**	Stabiliser Link Left	GA2A 34 170A	L:105	7	**GOM-307**	Silentblock For Susp.Arm	GA2A 34 470	d:38.5
2	**106-03-303**	Stabiliser Link Right	GA2A 34 150A	L:105	8	**GOM-310**	Silentblock For Susp.Arm	GE4T 34 46YD	d:18,5
3	**72-03-312**	TCA	GE4T-34-350E	c:18	9	**GOM-311**	Silentblock For Susp.Arm	GE4T 34 46XD	d:18,5
4	**72-03-313**	TCA	GE4T-34-300E	c:18	10	**73-03-317**	Ball Joint Lower	0G030 34550B	c:18
5	**103-03-324**	Axial Joint	GE4T-32-240	th:MM18X1.5R L:307	11	**106-03-310**	Stabiliser Link	GE4T 28 170	L:230
6	**111-03-339**	Tie Rod End	8AG3-32-280	c:12.9 th:FM14x1.5R					

MAZDA
B1600 - 1800 - 2000 - 2200 - 2600

B1600 - 1800 (UD,UF)
B2000 - 2200 - 2600

10/1981 - 12/1996

1 **111-05-597**
2WD 1987->

3 **111-03-329**
4WD 1987->

2 **111-03-327**
ALL

2 **111-03-327**
ALL

1 **111-05-597**
2WD 1987->

3 **111-03-329**
4WD 1987->

11 **52-03-314**

12 **59-03-310**

4 **111-03-320**

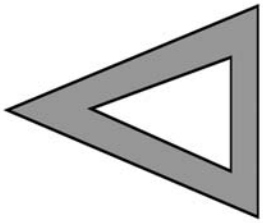

UPPER

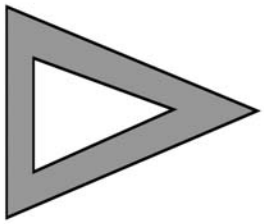

4 **111-03-320**

5 **53-03-321**

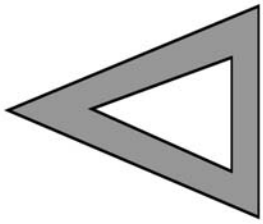

LOWER

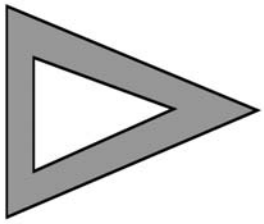

5 **53-03-321**

6 **73-03-324**

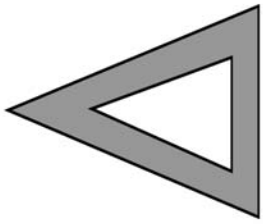

LOWER
B2600 1987->

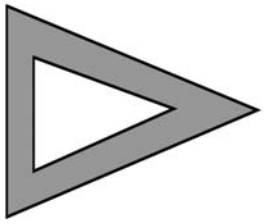

6 **73-03-324**

7 **73-03-311** ->1987
8 **73-03-312** ->1987
9 **111-03-323** ->1987
10 **111-03-321** ->1987

7 **73-03-311** ->1987
8 **73-03-312** ->1987
9 **111-03-323** ->1987
10 **111-03-321** ->1987

Ref	ASHIKA CODE	Description	OEM	Measures	Ref	ASHIKA CODE	Description	OEM	Measures
1	111-05-597	Tie Rod End	UB39-99-324	c: 13.7 th: FM14X1.5L	7	73-03-311	Ball Joint	VA01-99-354	
2	111-03-327	Tie Rod End Inner	UB39-99-322	c: 13.8 th: FM14X1.5R	8	73-03-312	Ball Joint	VA01-99-356	
3	111-03-329	Tie Rod End	8AU1-32-280	c: 13.7 th: FM14X1.5L	9	111-03-323	Tie Rod End	0662-99-324	
4	111-03-320	Ball Joint Upper	8AU1-34-540	c: 13.7	10	111-03-321	Tie Rod End	VA01-32-240	
5	53-03-321	Ball Joint Lower	8AU2-34-510	c:17.6	11	52-03-314		VB39-32-220B	
6	73-03-324	Ball Joint Lower	8AU3-34-510	c: 17.8	12	59-03-310		VB39-32-320A	

O.E.M. names and numbers are used for reference purposes only Ashika assumes no responsibility for possible errors

B2200 - 2500 - 2600 (UN) 02/1999 ->

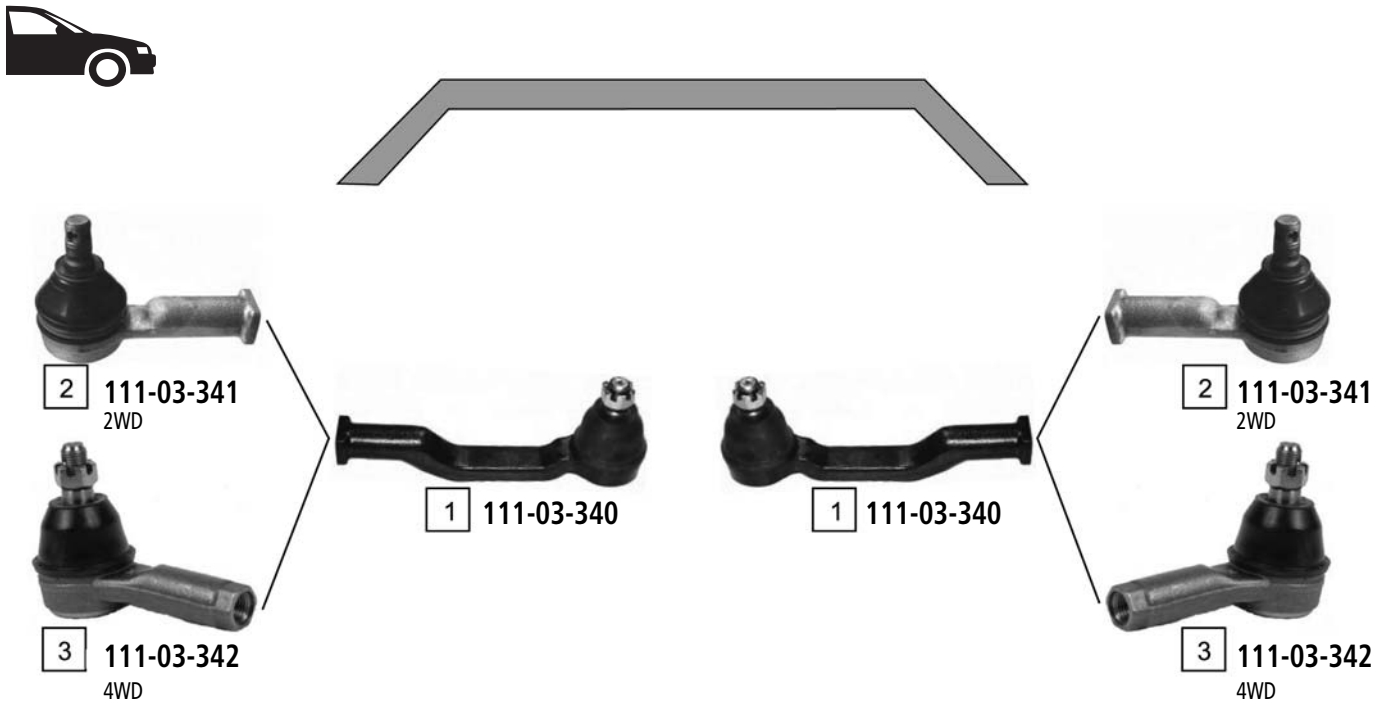

Ref	ASHIKA CODE	Description	OEM	Measures	Ref	ASHIKA CODE	Description	OEM	Measures
1	111-03-340	Tie Rod End	UH74-32-250		3	111-03-342	Tie Rod End	UH74-32-280	
2	111-03-341	Tie Rod End	UH71-32-280	c:13.6 th:FM14X15L					

DEMIO (DW) **08/1998 - 04/2003**

1 106-03-311

1 106-03-311

4 111-03-334

5 103-03-326

6 103-03-325

4 111-03-334

2 71-03-300

3 71-03-301

Ref	ASHIKA CODE	Description	OEM	Measures	Ref	ASHIKA CODE	Description	OEM	Measures
1	**106-03-311**	Stabiliser Link	EA03-34-170A	L:55	4	**111-03-334**	Tie Rod End	8AB2-32-280	c:13.3 th:FM12X1.25
2	**71-03-300**	TCA	D201 34 350A		5	**103-03-326**	Axial Joint	D102-32-240	th:MM16X1.5R L:279
3	**71-03-301**	TCA	D201 34 300E		6	**103-03-325**	Axial Joint	D102-32-250	th:MM16X1.5R L:280

O.E.M. names and numbers are used for reference purposes only Ashika assumes no responsibility for possible errors

E2000 - E2200 (SD,SR) 01/1984 - 07/1999

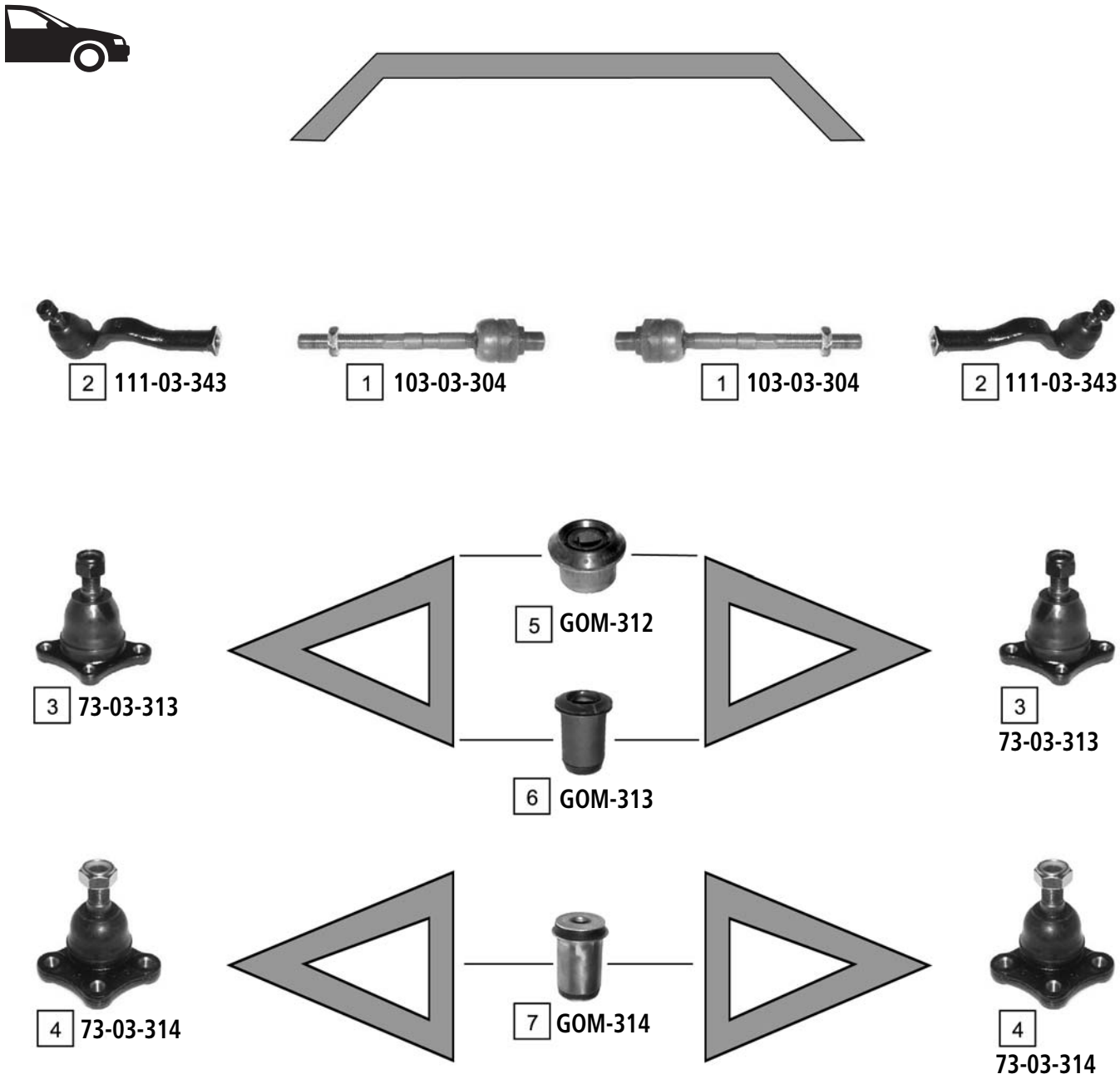

Ref	ASHIKA CODE	Description	OEM	Measures	Ref	ASHIKA CODE	Description	OEM	Measures
1	103-03-304	Axial Joint	S083-32-115	h:MM17X1R L:183	5	GOM-312	Silentblock For Susp.Arm	S083 34 840A	d:45.3
2	111-03-343	Tie Rod End	S083-99-324	c:13.8 th:FM14X1.5R	6	GOM-313	Silentblock For Susp.Arm	S083 34 830A	d:45.2
3	73-03-313	Ball Joint Upper	S083 99 354	c:17.8	7	GOM-314	Silentblock For Susp.Arm	S083-34-460	d:45
4	73-03-314	Ball Joint Lower	S083 99 356	c:17.8					

MAZDA 2 **04/2003 ->**

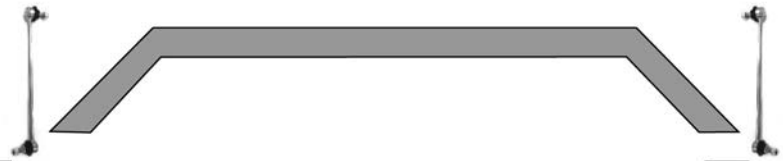

6 106-03-312

6 106-03-312

1 111-03-344

9 103-03-327

9 103-03-327

5 111-03-345

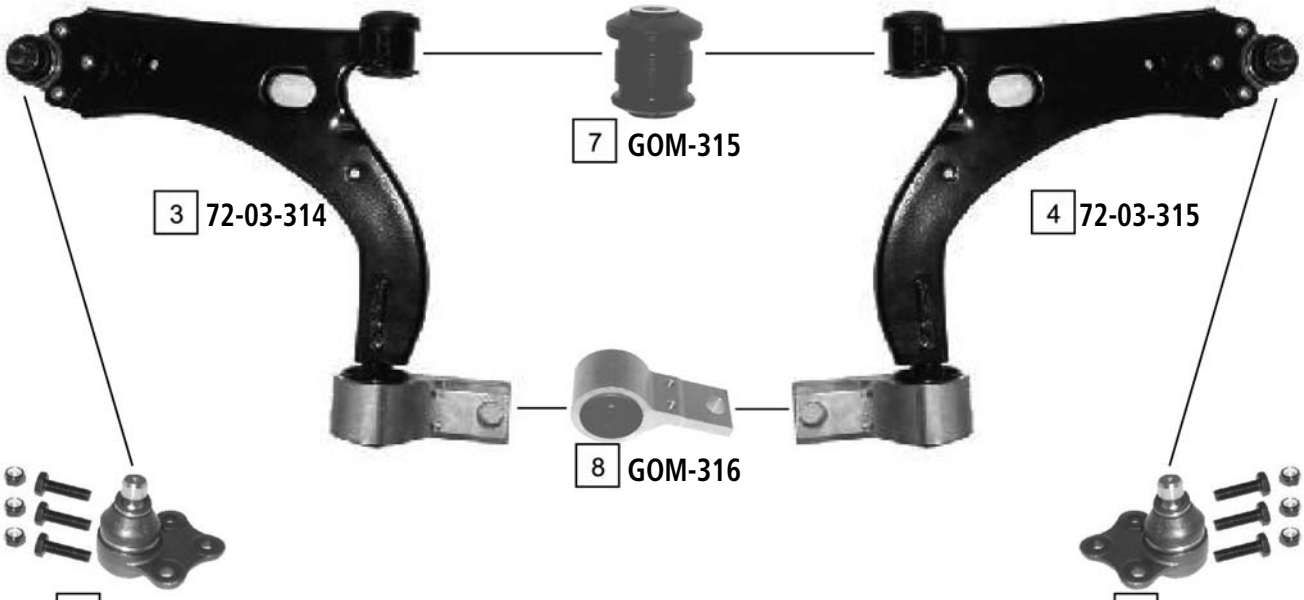

7 GOM-315

3 72-03-314

4 72-03-315

8 GOM-316

2 73-03-303

2 73-03-303

Ref	ASHIKA CODE	Description	OEM	Measures	Ref	ASHIKA CODE	Description	OEM	Measures
1	**111-03-344**	Tie Rod End Left	1202549	c:11,6 th:FM14X1.5R	6	**106-03-312**	Stabiliser Link	1146150	L:285
2	**73-03-303**	Ball Joint	Part of 72-03-314 / 72-03-315	c:17,5	7	**GOM-315**	Silentblock For Susp.Arm	Part of 72-03-314 / 72-03-315	d:40
3	**72-03-314**	TCA Left	DD32 34 350	c:17,5	8	**GOM-316**	Silentblock For Susp.Arm	Part of 72-03-314 / 72-03-315	
4	**72-03-315**	TCA Right	DD32 34 300	c:17,5	9	**103-03-327**	Axial Joint	4 342 539	th:MM14X1,5R L:278
5	**111-03-345**	Tie Rod End Right	1202548	c:11,6 th:FM14X1,5R					

O.E.M. names and numbers are used for reference purposes only Ashika assumes no responsibility for possible errors

MAZDA 3 (BK) 06/2003 ->

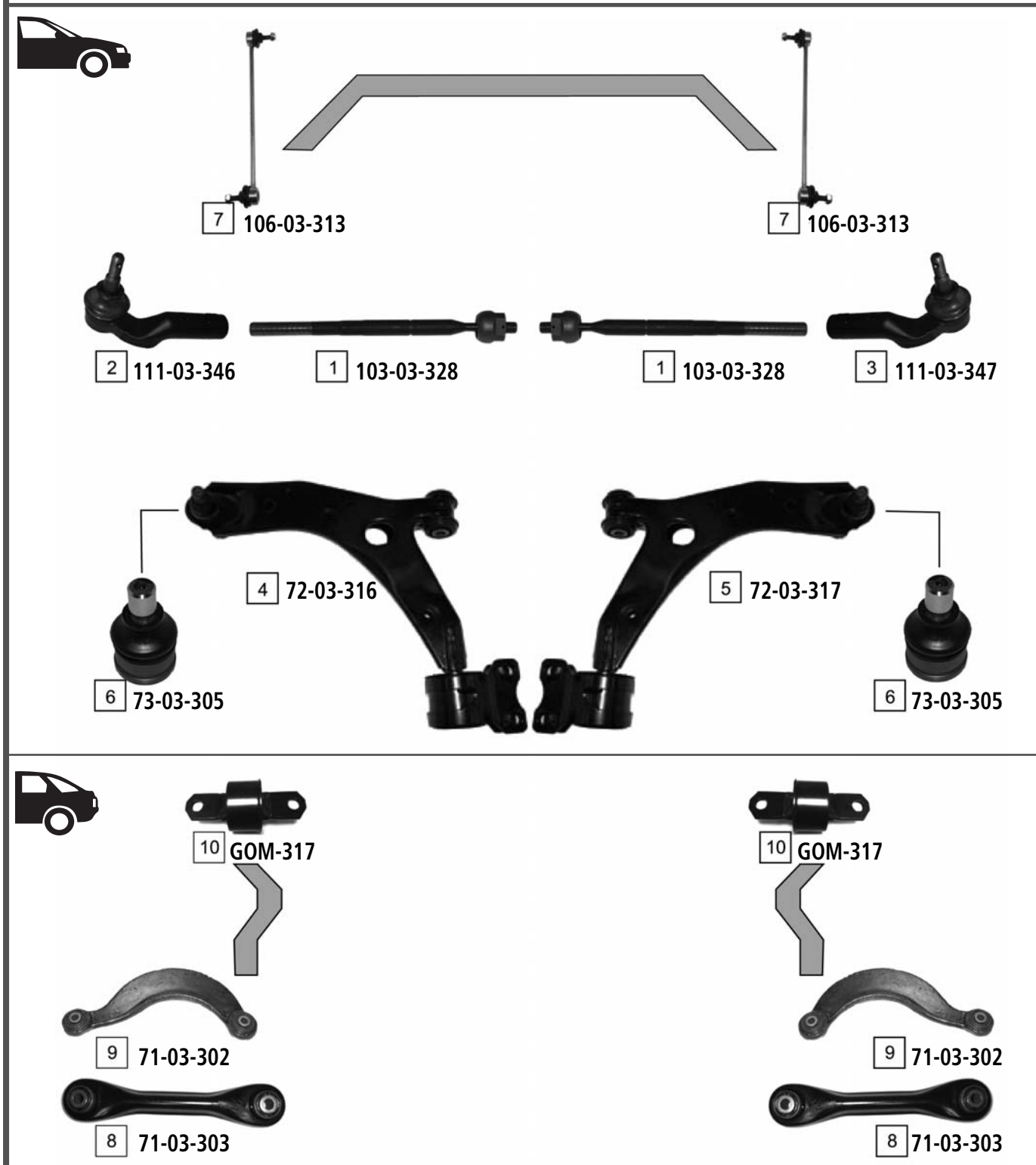

Ref	ASHIKA CODE	Description	OEM	Measures	Ref	ASHIKA CODE	Description	OEM	Measures
1	103-03-328	Axial Joint	BP4L 32 240	th:MM14X1.5R L:292	6	73-03-305	Ball Joint	Part of 72-03-316 / 72-03-317	c:18
2	111-03-346	Tie Rod End Left	BP4L 32 290	c:12.2 th:FM17X1.5R	7	106-03-313	Stabiliser Link	BP4K 34 170C	L:307
3	111-03-347	Tie Rod End Right	BP4L 32 280	c:12.2 th:FM17X1.5R	8	71-03-303	Track Rod	BP4K 28 500C	
4	72-03-316	TCA Left Wbj	B32H 34 350	c:18	9	71-03-302	Track Rod	BP4K 28 C 10B	
5	72-03-317	TCA Right Wbj	B32H 34 300	C:18	10	GOM-317	Silentblock Axle Body	30666821	

MAZDA 5 **02/2005 ->**

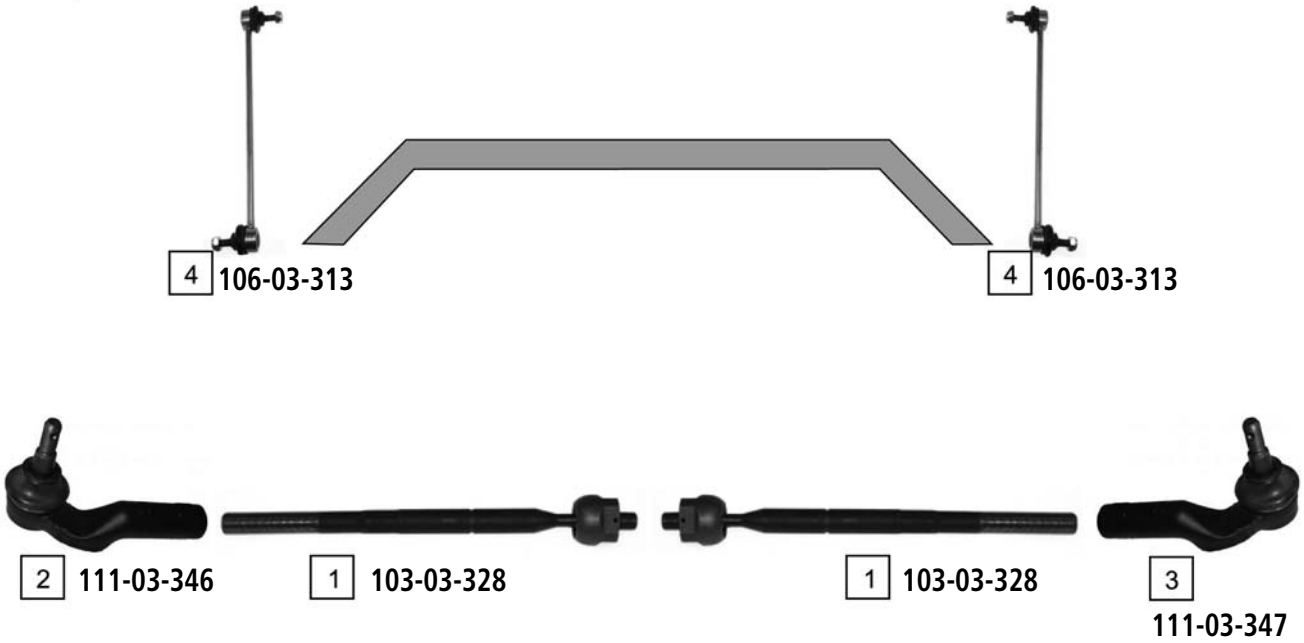

Ref	ASHIKA CODE	Description	OEM	Measures	Ref	ASHIKA CODE	Description	OEM	Measures
1	**103-03-328**	Axial Joint	BP4L 32 240	th:MM14X1.5R L:292	3	**111-03-347**	Tie Rod End Right	BP4L 32 280	c:12.2 th:FM17X1.5R
2	**111-03-346**	Tie Rod End Left	BP4L 32 290	c:12.2 th:FM17X1.5R	4	**106-03-313**	Stabiliser Link	BP4K 34 170C	L:307

O.E.M. names and numbers are used for reference purposes only Ashika assumes no responsibility for possible errors

MAZDA 6 (GG,GY) 01/2002 ->

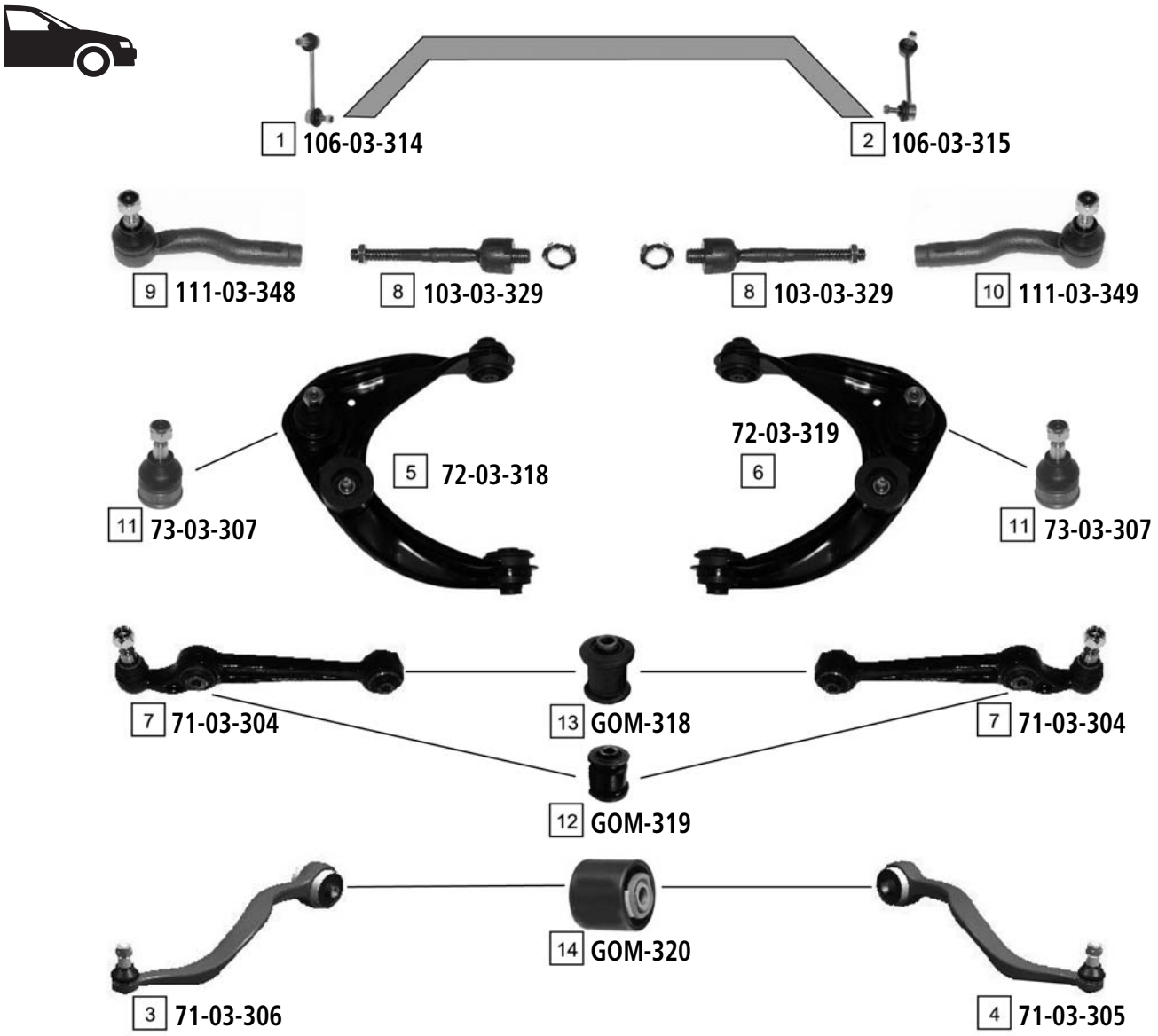

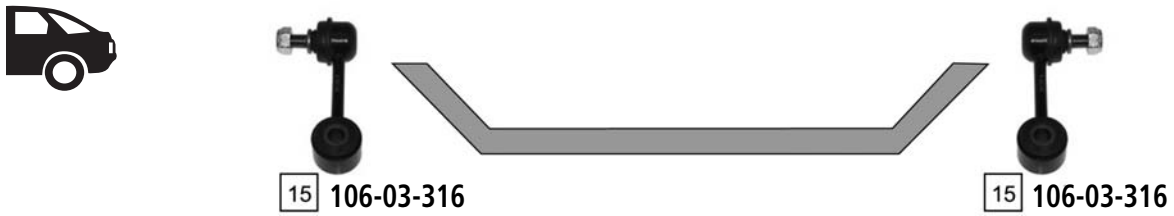

Ref	ASHIKA CODE	Description	OEM	Measures	Ref	ASHIKA CODE	Description	OEM	Measures
1	**106-03-314**	Stabiliser Link Left	GJ6A-34-170A	L:154	9	**111-03-348**	Tie Rod End Left	GJ6E-32-290	c:12.9 th:FM14X1.5R
2	**106-03-315**	Stabiliser Link Right	GJ6A-34-150A	L:154	10	**111-03-349**	Tie Rod End Right	GJ6E-32-280	c:12.9 th:FM14X1.5R
3	**71-03-306**	TCA Left	GJ6A-34-J50 B	c:19.5	11	**73-03-307**	Ball Joint	GJ6A-34-540	c:12.6
4	**71-03-305**	TCA Right	GJ6A-34-J00 B	c:19.5	12	**GOM-319**	Silentblock For Susp.Arm	GJ6A-34-710 A	d:44.2
5	**72-03-318**	TCA Left	GJ6A-34-250 B	c:12.8	13	**GOM-318**	Silentblock For Susp.Arm	GJ6A-34-470 A	d:40.2
6	**72-03-319**	TCA Right	GJ6A-34-200 B		14	**GOM-320**	Silentblock For Susp.Arm	GJ6A-34-460 A	d:62.3
7	**71-03-304**	TCA	GA6A-34-300 B	c:18.5	15	**106-03-316**	Stabiliser Link	GJ6A 28 170A	
8	**103-03-329**	Axial Joint	GJ6E-32-240	th:MM18X1.5R L:181					

MPV I (LV) **03/1995 - 09/1999**

3 **111-03-350**

2 **103-03-323**

2 **103-03-323**

3 **111-03-350**

1 **71-03-307**

1 **71-03-307**

Ref	ASHIKA CODE	Description	OEM	Measures	Ref	ASHIKA CODE	Description	OEM	Measures
1	**71-03-307**	TCA	LB82-34-300	c:18	3	**111-03-350**	Tie Rod End	8AL1-32-280	c:13.9 th:FM14X1.5R
2	**103-03-323**	Axial Joint	LA01-32-115	th:MM17X1R L:170					

O.E.M. names and numbers are used for reference purposes only Ashika assumes no responsibility for possible errors

MPV II (LW) **09/1999 - 07/2005**

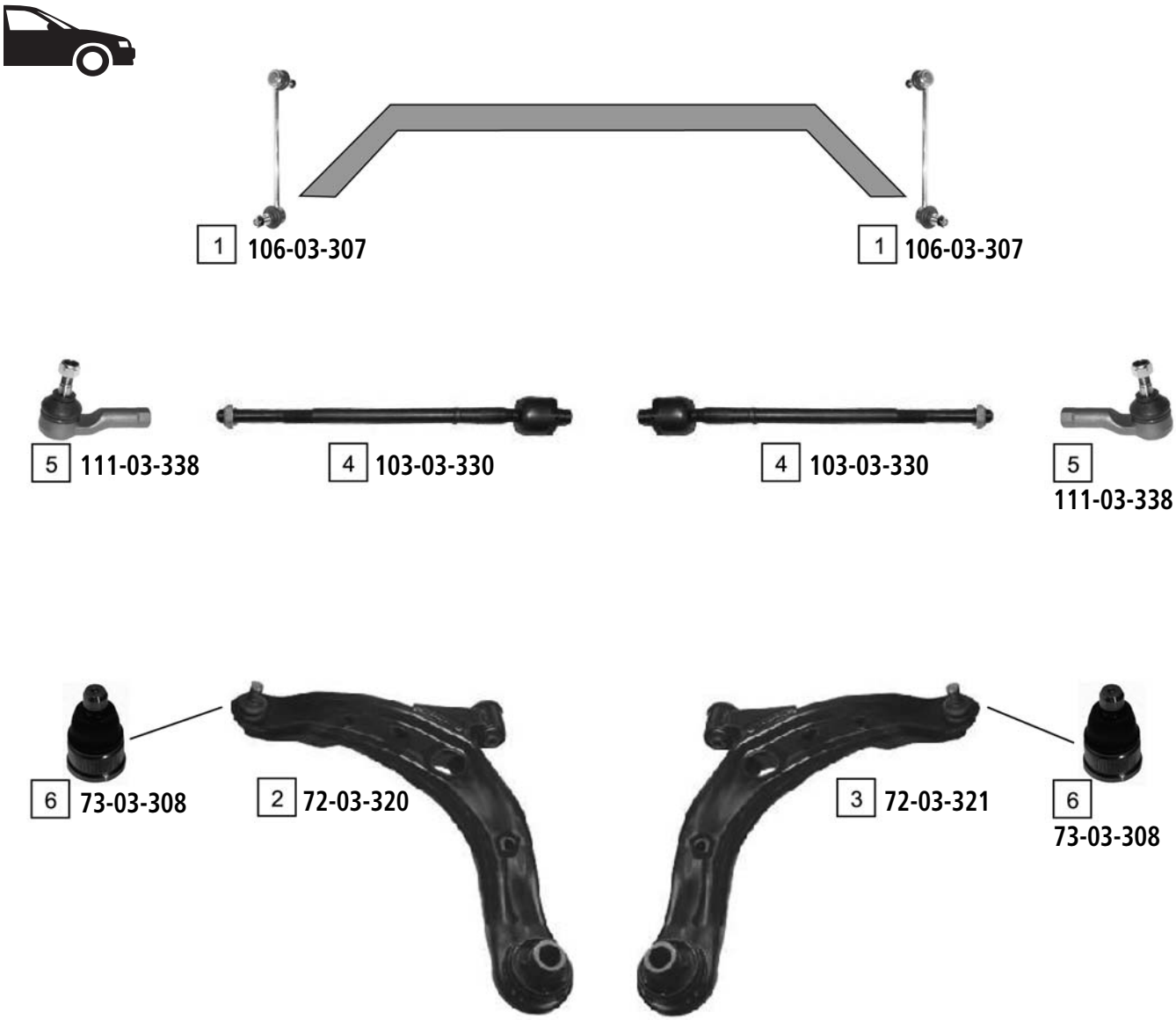

Ref	ASHIKA CODE	Description	OEM	Measures	Ref	ASHIKA CODE	Description	OEM	Measures
1	**106-03-307**	Stabiliser Link	LC62-34-170 A	L:266	4	**103-03-330**	Axial Joint	LC62-32-240 B	th:MM16X1.5R L:316
2	**72-03-320**	TCA Left Wbj	LC62 34 350C		5	**111-03-338**	Tie Rod End	8AG4 32 280	c:12.9 th:FM14X1.5R
3	**72-03-321**	TCA Right Wbj	LC62 34 300C		6	**73-03-308**	Ball Joint	Part of 72-03-320 / 72-03-321	

MX-3 (EC) 07/1991 - 09/1998

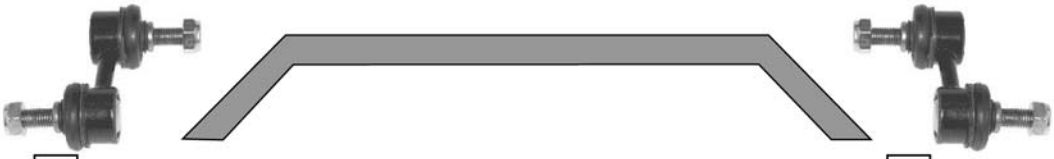

3 106-03-311 3 106-03-311

1 111-03-334 4 76-03-398 5 76-03-395 1 111-03-334

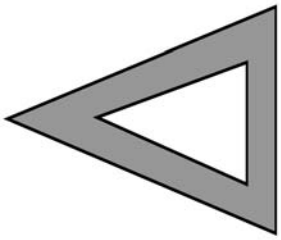

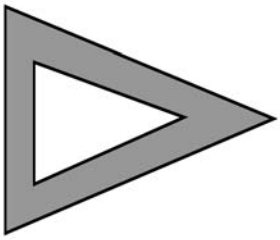

2 53-03-326 2 53-03-326

6 106-03-317 6 106-03-317

Ref	ASHIKA CODE	Description	OEM	Measures	Ref	ASHIKA CODE	Description	OEM	Measures
1	**111-03-334**	Tie Rod End	8AB2-32-280	c:13.3 th:FM12X1.25	4	**76-03-398**	Axial Joint	B456-32-25X	th:MM16X1R L:325
2	**53-03-326**	Ball Joint Lower	B455-34-550	c:16	5	**76-03-395**	Axial Joint	B456-32-24X	th:MM16X1R L:324
3	**106-03-311**	Stabiliser Link	EA03-34-170A	L:55	6	**106-03-317**	Stabiliser Link	EA01 28 170	L:80

O.E.M. names and numbers are used for reference purposes only Ashika assumes no responsibility for possible errors

MX-5 I (NA) 09/1989 - 09/1998

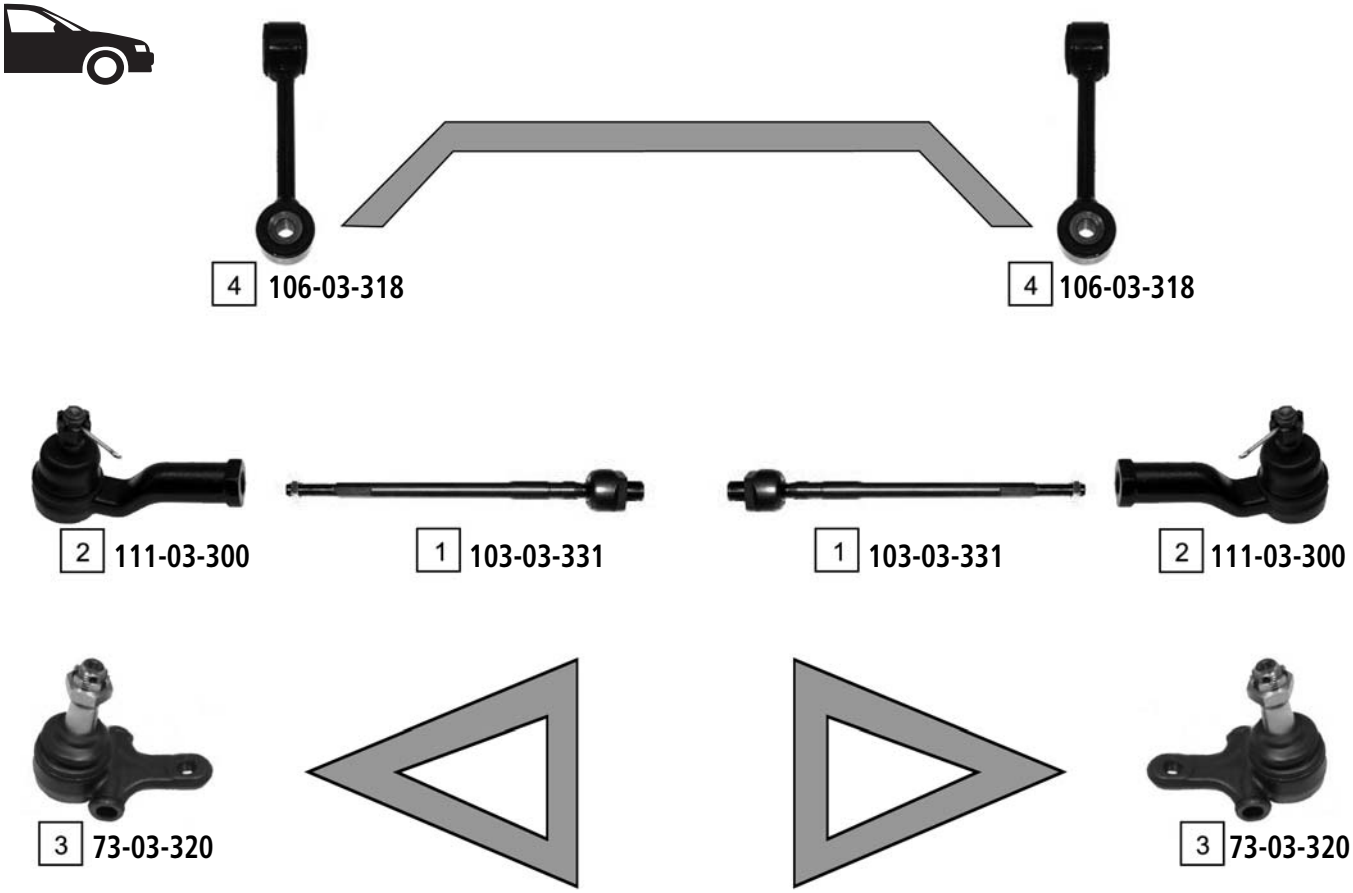

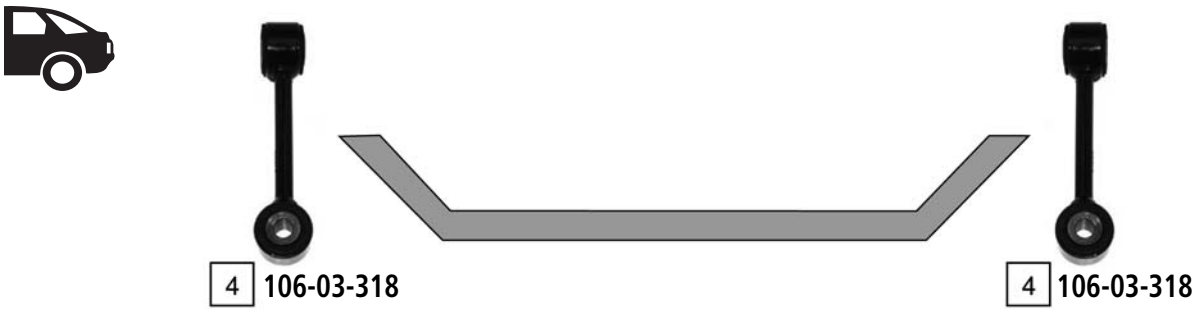

Ref	ASHIKA CODE	Description	OEM	Measures	Ref	ASHIKA CODE	Description	OEM	Measures
1	103-03-331	Axial Joint	NA01-32-240	th:MM18X1.5R L:301	3	73-03-320	Ball Joint	NA01 34 550	c:15.9
2	111-03-300	Tie Rod End	8AN1-32-280	c:13.2 th:FM12X1.25	4	106-03-318	Stabiliser Link	NA01 34 170	L:107

MX-5 II (NB) **05/1998 - 02/2005**

1 **106-03-320**

2 **106-03-319**

10 **111-03-300**

8 **103-03-332**

9 **103-03-333**

10 **111-03-300**

3 **72-03-322**

UPPER

4 **72-03-323**

5 **72-03-324**

LOWER

6 **72-03-325**

7 **73-03-320**

7 **73-03-320**

Ref	ASHIKA CODE	Description	OEM	Measures	Ref	ASHIKA CODE	Description	OEM	Measures
1	**106-03-320**	Stabiliser Link Left	NC10-34-170	L:104	6	**72-03-325**	TCA Right	N066 34 310	
2	**106-03-319**	Stabiliser Link Right	NC10-34-150	L:104	7	**73-03-320**	Ball Joint	NA01 34 550	c:15.9
3	**72-03-322**	TCA Left	N068-34-250		8	**103-03-332**	Axial Joint	NC10-32-250A	th:MM16X1.5R L:303
4	**72-03-323**	TCA Right	N068-34-200		9	**103-03-333**	Axial Joint	NC10-32-240A	th:MM16X1R L:303
5	**72-03-324**	TCA Left	N066 34 360		10	**111-03-300**	Tie Rod End	8AN1-32-280	c:13.2 th:FM12X1.25

O.E.M. names and numbers are used for reference purposes only Ashika assumes no responsibility for possible errors

MX-6 (GE6) 07/1991 - 06/1998

2 111-03-339

1 103-03-322

1 103-03-322

2 111-03-339

Ref	ASHIKA CODE	Description	OEM	Measures	Ref	ASHIKA CODE	Description	OEM	Measures
1	**103-03-322**	Axial Joint	GA2A-32-250	th:MM18X1R L:300	2	**111-03-339**	Tie Rod End	8AG3-32-280	c:12.9 th:FM14X1.5R

PREMACY (CP) **07/1999 ->**

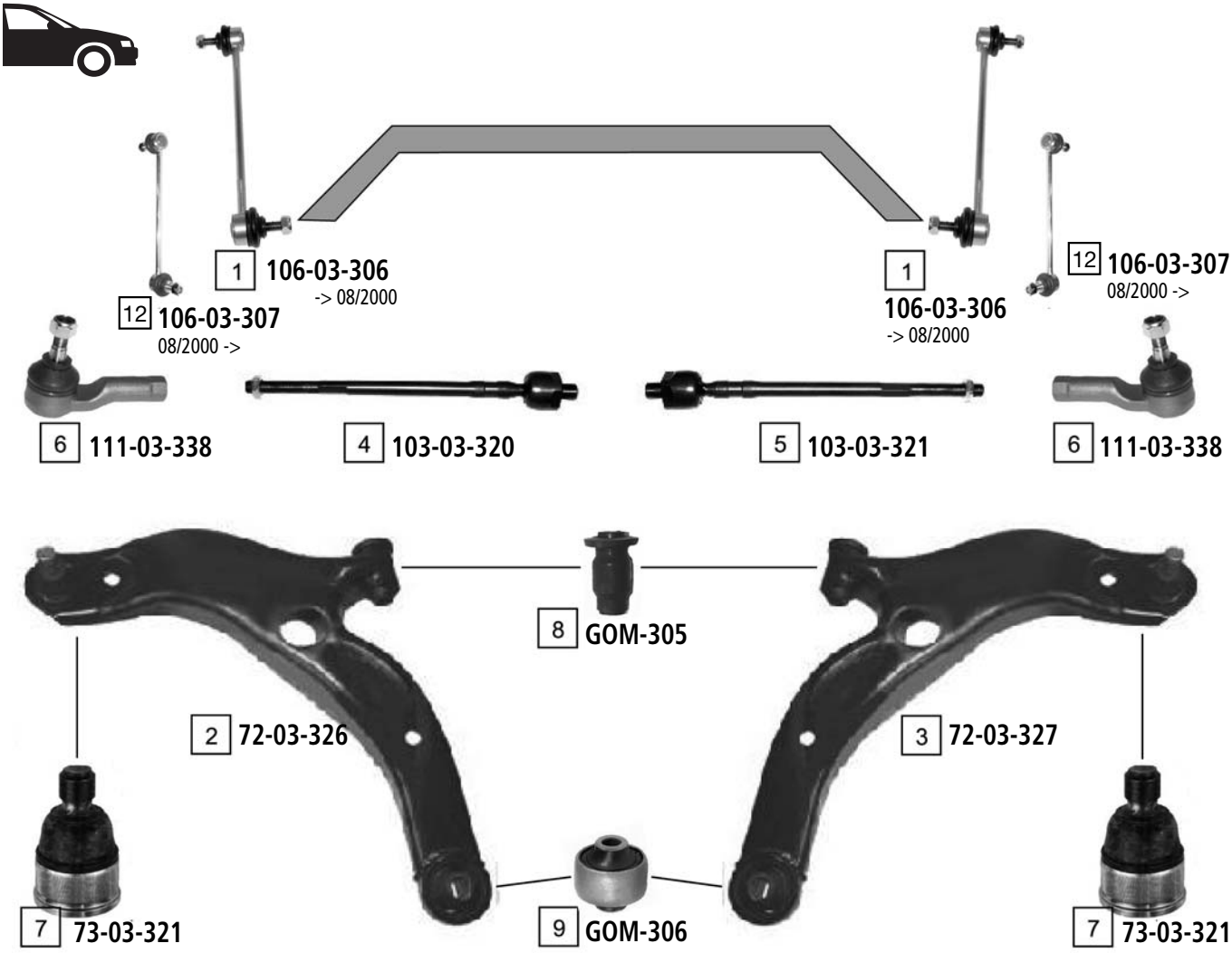

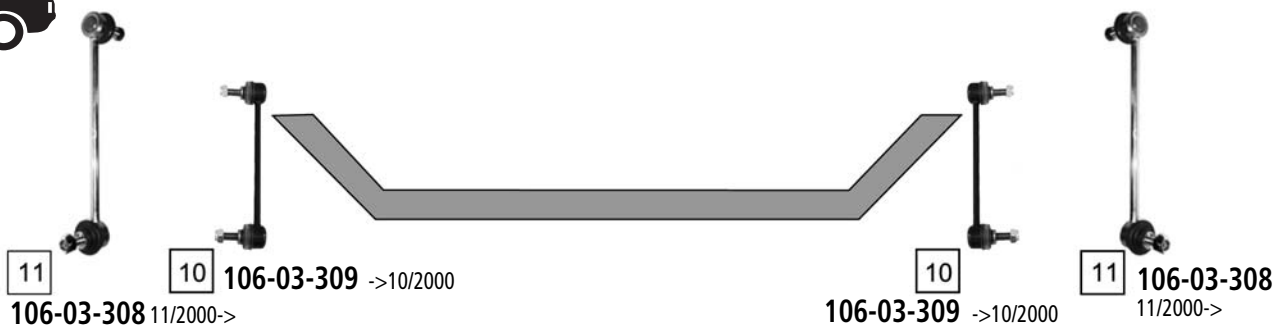

Ref	ASHIKA CODE	Description	OEM	Measures	Ref	ASHIKA CODE	Description	OEM	Measures
1	**106-03-306**	Stabiliser Link	B26 R 34 170	L:190	7	**73-03-321**	Ball Joint	LC62-34-550	
2	**72-03-326**	TCA	C 100 34 350 A	c:18	8	**GOM-305**	Silentblock For Susp.Arm	B25D 34 470	
3	**72-03-327**	TCA	C 100 34 300 A	c:18	9	**GOM-306**	Silentblock For Susp.Arm	B25D 34 460	
4	**103-03-320**	Axial Joint	B25D 32 240	th:MM16X1R L:310	10	**106-03-309**	Stabiliser Link	B26R-28-170	L:190
5	**103-03-321**	Axial Joint	B25D 32 250	th:MM16X1R L:310	11	**106-03-308**	Stabiliser Link	B30H 28 170 B	L:160
6	**111-03-338**	Tie Rod End	8AG4 32 280	c:12.9 th:FM14X1.5R	12	**106-03-307**	Stabiliser Link	LC62-34-170 A	L:266

O.E.M. names and numbers are used for reference purposes only Ashika assumes no responsibility for possible errors

RX 7 II (FC) RX 7 III (FD) **11/1985 - 06/1996**

2 **111-03-334**
FD

2 **111-03-334**
FD

3 **103-03-304**
FC

3 **103-03-304**
FC

1 **53-03-307**
FC

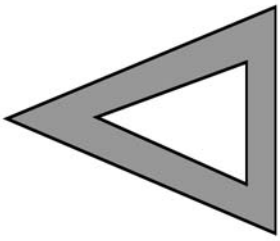

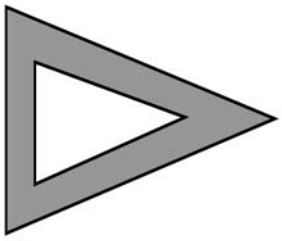

1 **53-03-307**
FC

Ref	ASHIKA CODE	Description	OEM	Measures	Ref	ASHIKA CODE	Description	OEM	Measures
1	**53-03-307**	Ball Joint Lower	8531-99-356	c:14.5	3	**103-03-304**	Axial Joint	S083-32-115	th:MM17X1R L:183
2	**111-03-334**	Tie Rod End	8AB2-32-280	c:13.3 th:FM12X1.25					

XEDOS 6 (CA) **07/1991 - 10/1999**

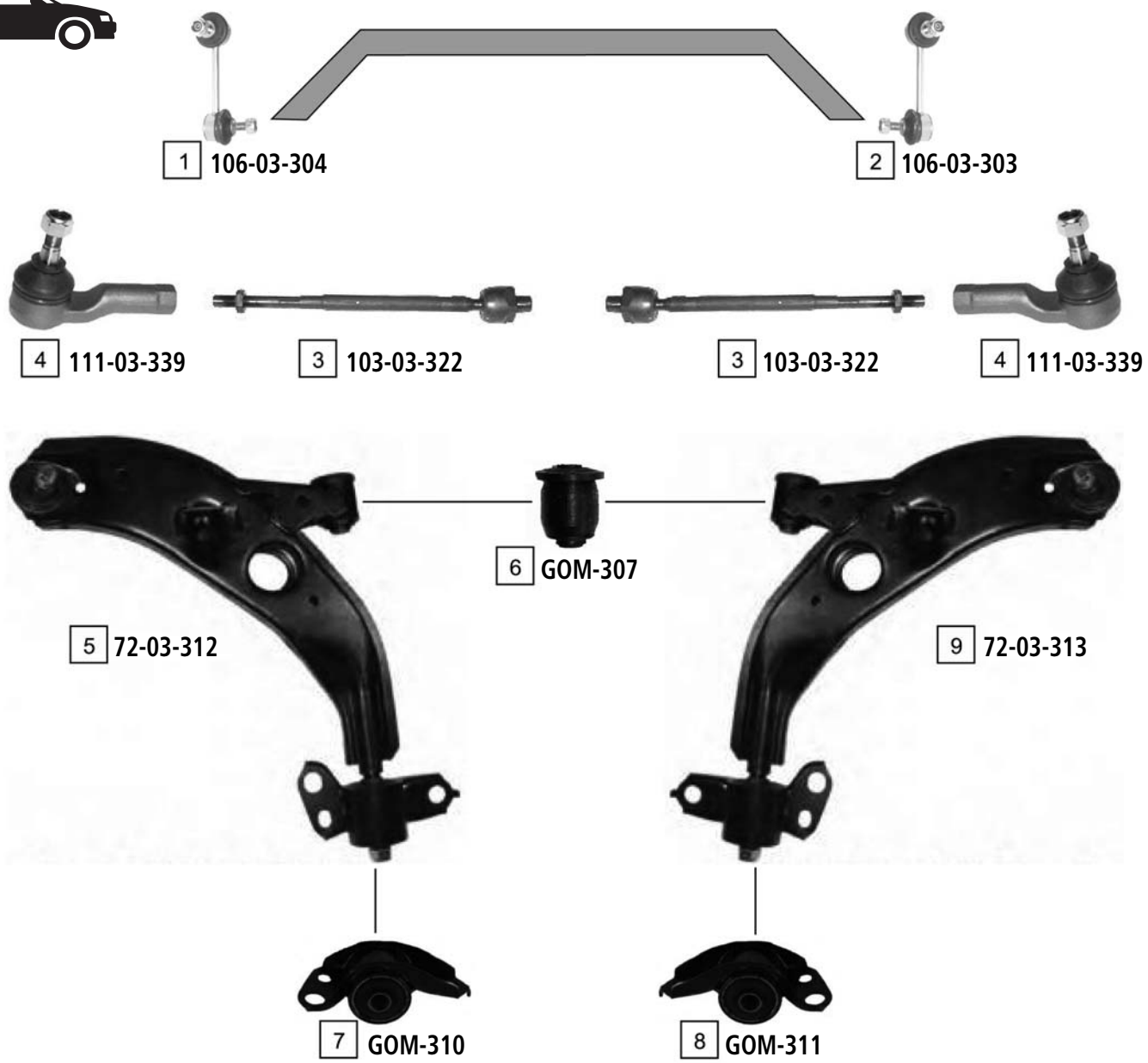

10 106-0K-K51

10 106-0K-K51

Ref	ASHIKA CODE	Description	OEM	Measures	Ref	ASHIKA CODE	Description	OEM	Measures
1	**106-03-304**	Stabiliser Link Left	GA2A 34 170A	L:105	6	**GOM-307**	Silentblock For Susp.Arm	GA2A 34 470	d:38.5
2	**106-03-303**	Stabiliser Link Right	GA2A 34 150A	L:105	7	**GOM-310**	Silentblock For Susp.Arm	GE4T 34 46YD	d:18.5
3	**103-03-322**	Axial Joint	GA2A-32-250	th:MM18X1R L:300	8	**GOM-311**	Silentblock For Susp.Arm	GE4T 34 46XD	d:18.5
4	**111-03-339**	Tie Rod End	8AG3-32-280	c:12.9 th:FM14X1.5R	9	**72-03-313**	TCA	GE4T-34-300E	c:18
5	**72-03-312**	TCA	GE4T-34-350E	c:18	10	**106-0K-K51**	Stabiliser Link	GA2C-28-170B	

O.E.M. names and numbers are used for reference purposes only Ashika assumes no responsibility for possible errors

CANTER (35FB,35FE,60FE,63FE) 01/1986 - 04/2002

2 111-05-507L

1 111-05-507R

1 111-05-507R

2
111-05-507L

Ref	ASHIKA CODE	Description	OEM	Measures	Ref	ASHIKA CODE	Description	OEM	Measures
1	**111-05-507R**	Tie Rod End	MW033301	c:16.2 th:MM20X1.5R	2	**111-05-507L**	Tie Rod End	MW033300	c:16.2 th:MM20x1.5L

CARISMA (DA_) 05/1995 - 02/1999

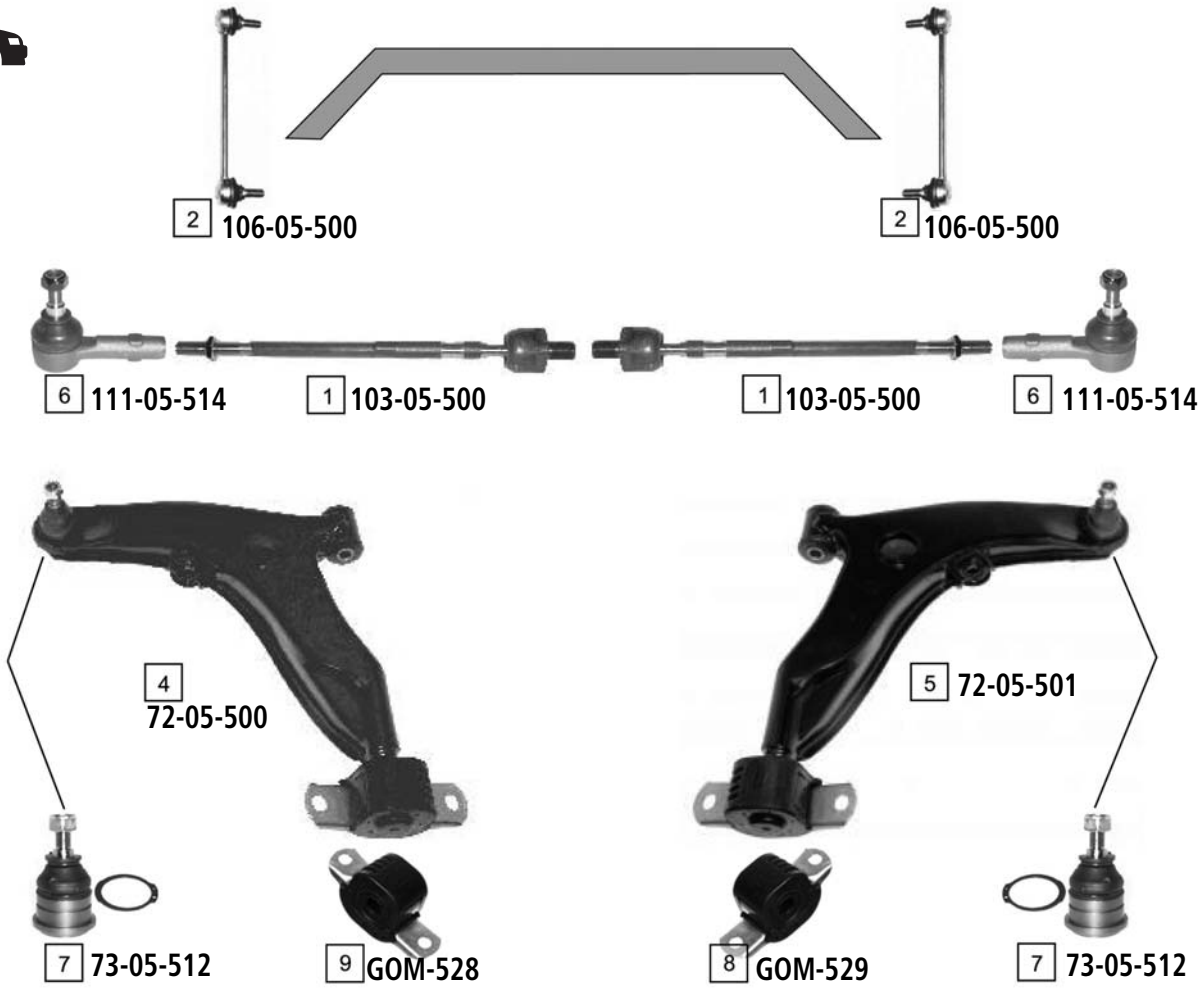

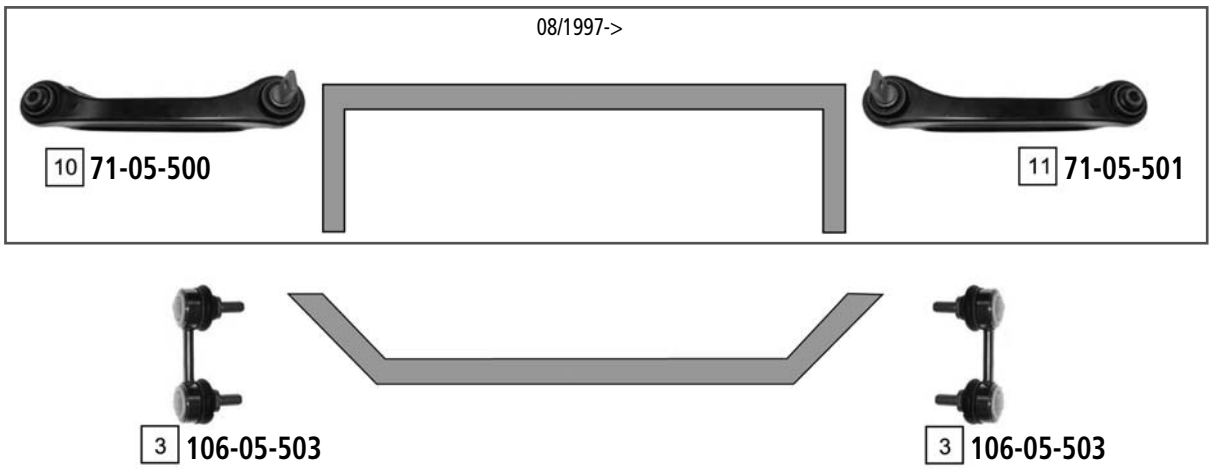

Ref	ASHIKA CODE	Description	OEM	Measures	Ref	ASHIKA CODE	Description	OEM	Measures
1	103-05-500	Axial Joint	MB244901	th:MM16X1.5R L:304	7	73-05-512	Ball Joint Lower	Part of 72-05-500 / 72-05-501	c:15
2	106-05-500	Stabiliser Link	MR272116		8	GOM-529	Silentblock For Susp.Arm	MB808910	
3	106-05-503	Stabiliser Link	MR272117	L:75.5	9	GOM-528	Silentblock For Susp.Arm	MB808909	
4	72-05-500	TCA Left	MR 179479	c:15	10	71-05-500	TCA Left	MR130479	
5	72-05-501	TCA Left	MR179480	c:15	11	71-05-501	TCA Right	MR130480	
6	111-05-514	Tie Rod End	MB 527169	c:13.3 th:FM12X1.25					

O.E.M. names and numbers are used for reference purposes only Ashika assumes no responsibility for possible errors

CARISMA (DA_) 03/1999 - 06/2006

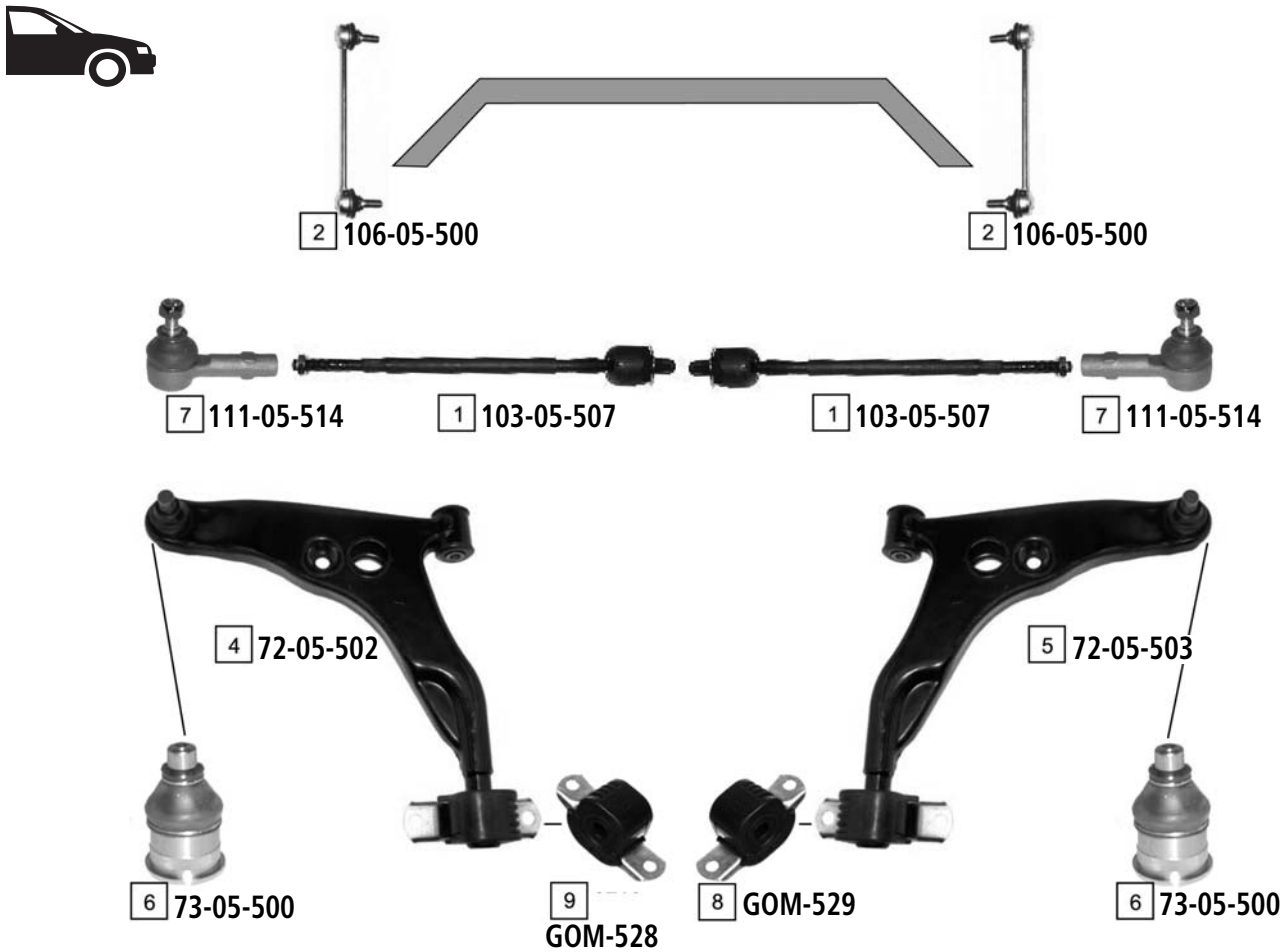

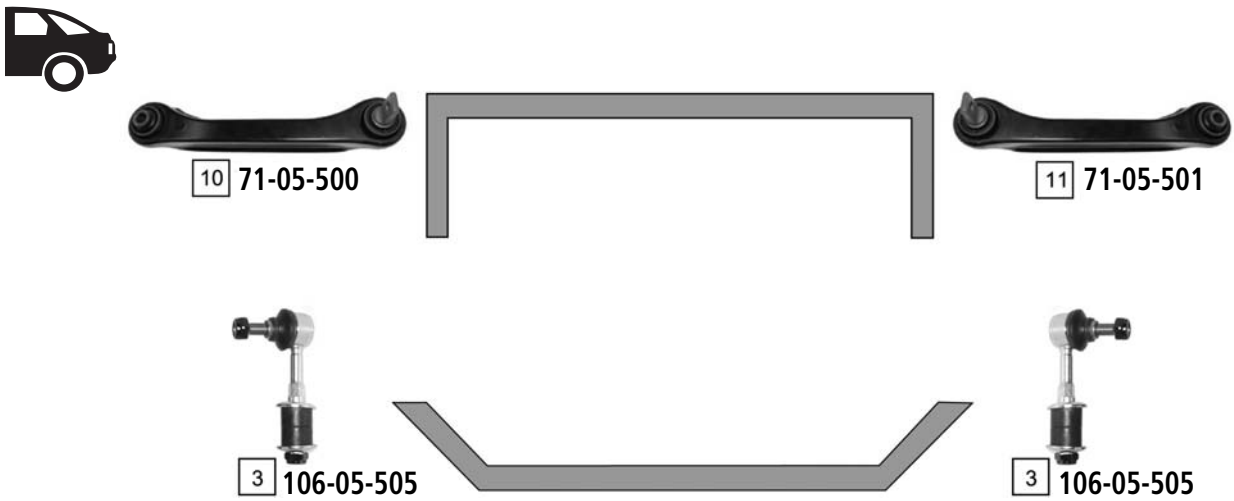

Ref	ASHIKA CODE	Description	OEM	Measures	Ref	ASHIKA CODE	Description	OEM	Measures
1	103-05-507	Axial Joint	MR403027	th:MM16X1.5R L:316	7	111-05-514	Tie Rod End	MR 485672	c:13.3 th:FM12X1.25
2	106-05-500	Stabiliser Link	MR272116		8	GOM-529	Silentblock For Susp.Arm	MB808910	
3	106-05-505	Stabiliser Link	MR-272118		9	GOM-528	Silentblock For Susp.Arm	MB808909	
4	72-05-502	TCA	MR911570	c:18	10	71-05-500	TCA Left	MR130479	
5	72-05-503	TCA	MR911569	c:18	11	71-05-501	TCA Right	MR130480	
6	73-05-500	Ball Joint	Part of 72-05-502 / 72-05-503	c:18					

COLT I (A15_A) **01/1997 - 01/1984**

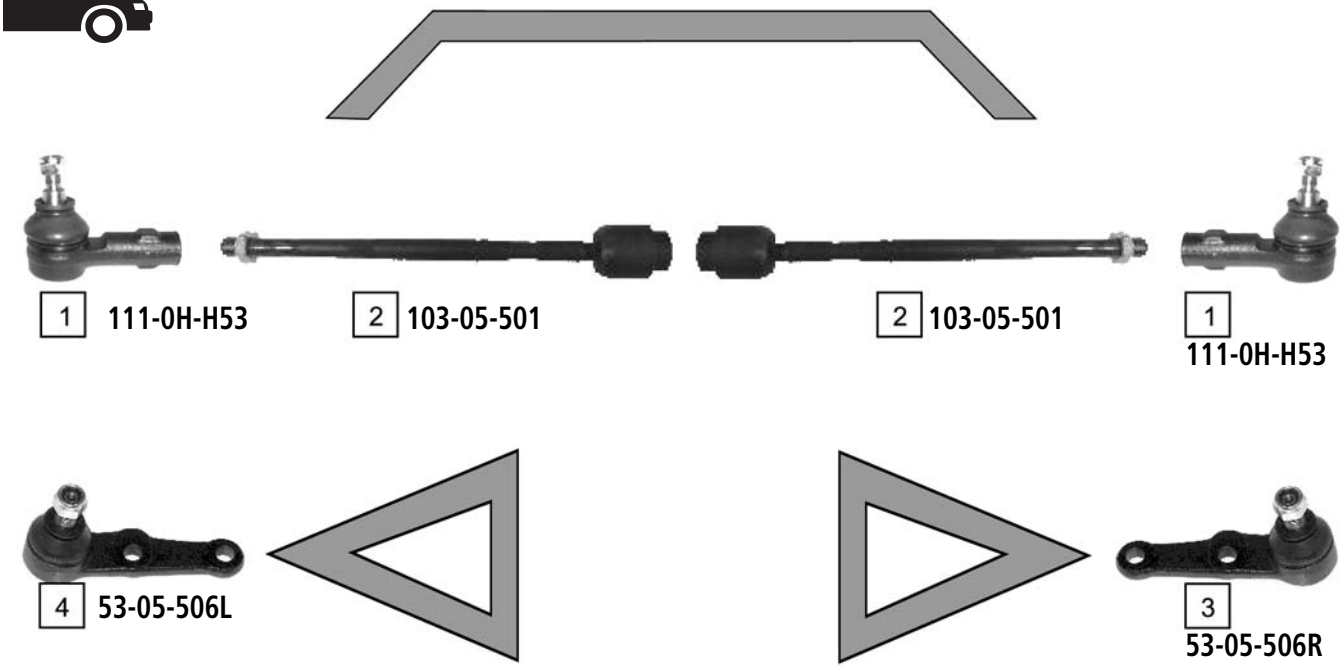

Ref	ASHIKA CODE	Description	OEM	Measures	Ref	ASHIKA CODE	Description	OEM	Measures
1	**111-0H-H53**	Tie Rod End	56820-21000	c:13.45 th:FM14X1.5	3	**53-05-506R**	Ball Joint Lower Right	MB109169	c:13.5
2	**103-05-501**	Axial Joint	MB122135	th:FM18X1.5R L:297	4	**53-05-506L**	Ball Joint Lower Left	MB109168	c:13.5

O.E.M. names and numbers are used for reference purposes only Ashika assumes no responsibility for possible errors

COLT II (C1 A) **05/1984 - 04/1988**

1 **106-05-501**

1 **106-05-501**

2 **111-05-511**
-> 05/1986

3 **103-05-502**
MS

3 **103-05-502**
MS

2 **111-05-511**
-> 05/1986

5 **111-05-514**
06/1986 ->

4 **103-05-504**
PS

4 **103-05-504**
PS

5 **111-05-514**
06/1986 ->

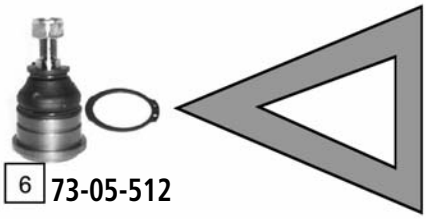

6 **73-05-512**

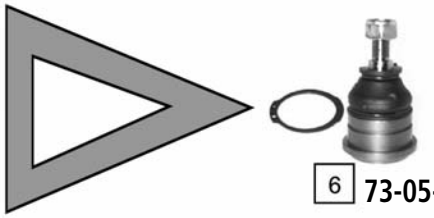

6 **73-05-512**

Ref	ASHIKA CODE	Description	OEM	Measures	Ref	ASHIKA CODE	Description	OEM	Measures
1	**106-05-501**	Stabiliser Link	4056 A014	L:60	4	**103-05-504**	Axial Joint	MB350718	
2	**111-05-511**	Tie Rod End	MB241982	c:13.3 th:FM12X1.25	5	**111-05-514**	Tie Rod End	MB 527169	c:13.4 th:FM12X1.25
3	**103-05-502**	Axial Joint	MB347666	th:MM12X1.25R L:278	6	**73-05-512**	Ball Joint Lower		c:15

COLT III (C5_A) **04/1998 - 04/1992**

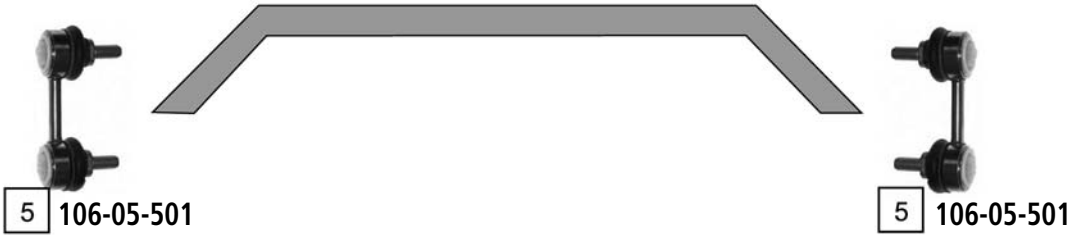

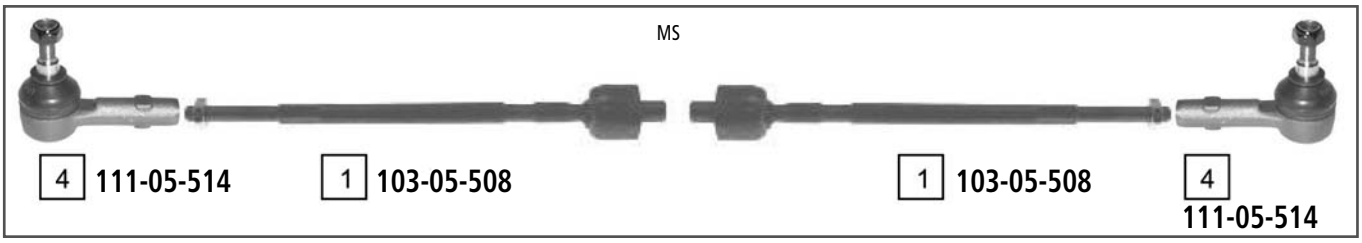

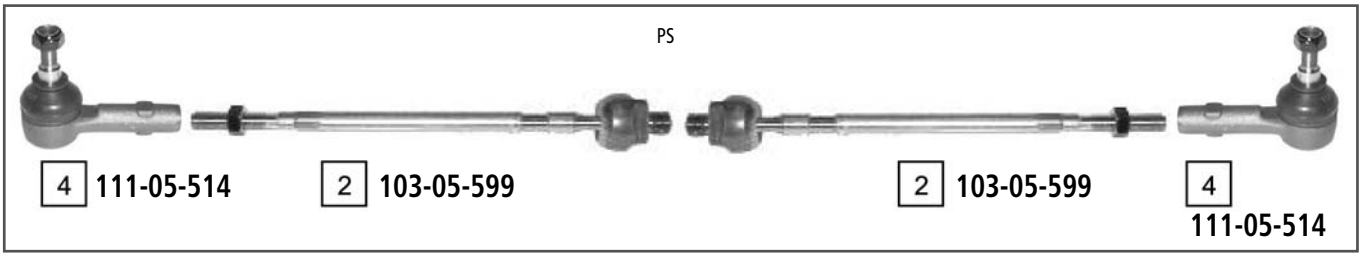

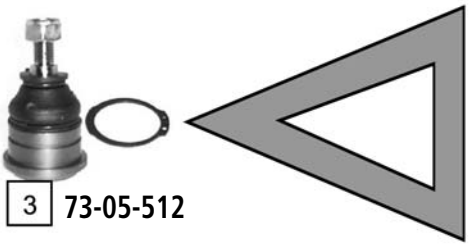

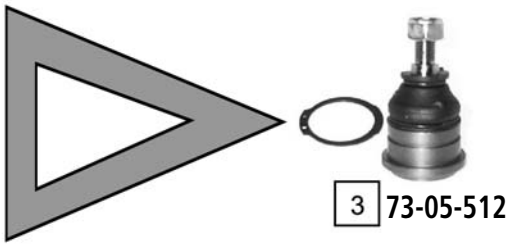

Ref	ASHIKA CODE	Description	OEM	Measures	Ref	ASHIKA CODE	Description	OEM	Measures
1	**103-05-508**	Axial Joint	MB553249	th:MM16X1.5R L:298	4	**111-05-514**	Tie Rod End	MB 527169	c:13.4 th:FM12X1.25
2	**103-05-599**	Axial Joint	MB 910934	th:MM16X1.5R L:309	5	**106-05-501**	Stabiliser Link	4056 A014	L:60
3	**73-05-512**	Ball Joint Lower		c:15					

O.E.M. names and numbers are used for reference purposes only Ashika assumes no responsibility for possible errors

COLT IV (CA_A) 04/1992 - 08/1995

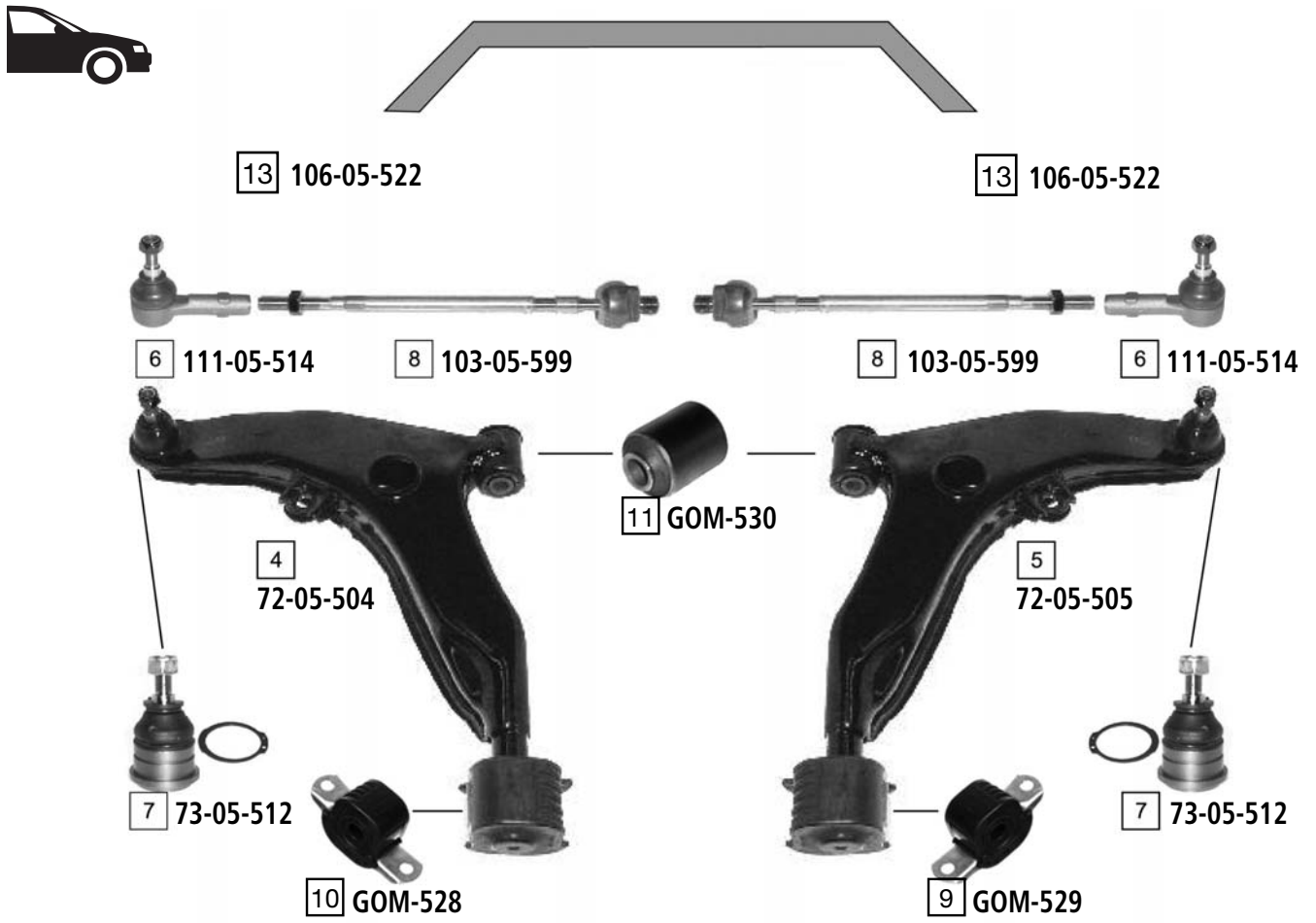

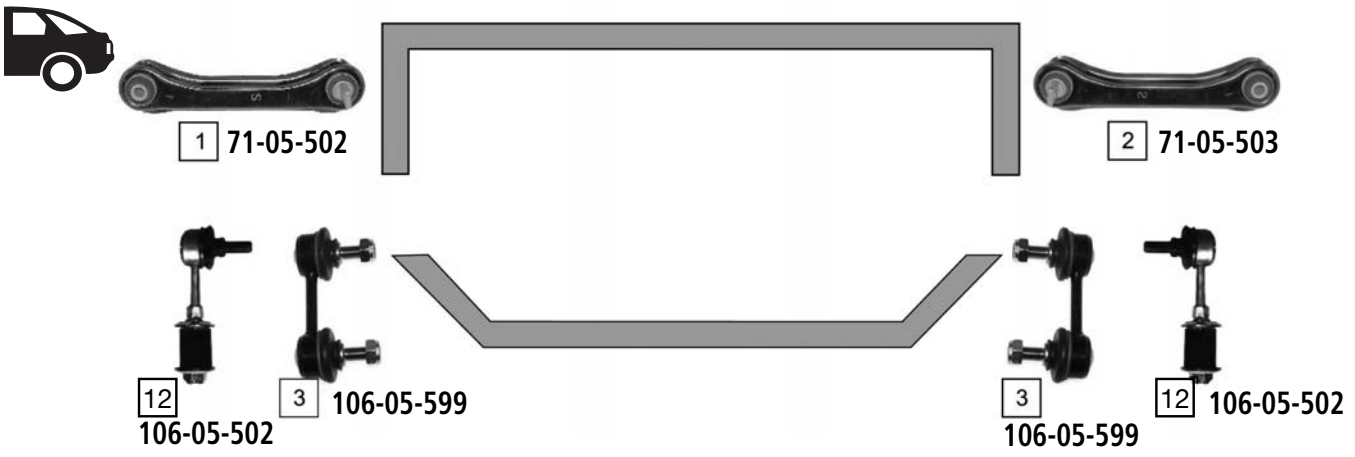

Ref	ASHIKA CODE	Description	OEM	Measures	Ref	ASHIKA CODE	Description	OEM	Measures
1	71-05-502	TCA Left	MB809220	c:15	8	103-05-599	Axial Joint	MB 910934	th:MM16X1.5R L:309
2	71-05-503	TCA Right	MB809221	c:15	9	GOM-529	Silentblock For Susp.Arm	MB808910	
3	106-05-599	Stabiliser Link	MB 809354	L:75	10	GOM-528	Silentblock For Susp.Arm	MB808909	
4	72-05-504	TCA Left	MB912077	c:15	11	GOM-530	Silentblock For Susp.Arm	Part of 72-05-504 / 72-05-505	
5	72-05-505	TCA Right	MB912078	c:15	12	106-05-502	Stabiliser Link	MB809355	L:105
6	111-05-514	Tie Rod End	MB 527169	c:13.4 th:FM12X1.25	13	106-05-522	Stabiliser Link	MB241974	
7	73-05-512	Ball Joint Lower	Part of 72-05-504/ 72-05-505	c:15					

COLT V (CJ_A) **09/1995 - 07/2005**

Ref	ASHIKA CODE	Description	OEM	Measures	Ref	ASHIKA CODE	Description	OEM	Measures
1	**103-05-599**	Axial Joint	MR297969	th:MM16X1.5R L:309	5	**111-05-514**	Tie Rod End	MR 485672	c:13.3 th:FM12X1.25
2	**72-05-506**	TCA Left Wbj	MR439701		6	**GOM-529**	Silentblock For Susp.Arm	MB808910	
3	**72-05-507**	TCA Right Wbj	MR439702		7	**GOM-528**	Silentblock For Susp.Arm	MB808909	
4	**73-05-512**	Ball Joint	MB-241883	c:15	8	**GOM-530**	Silentblock For Susp.Arm	Part of 72-05-506 72-05-507	

O.E.M. names and numbers are used for reference purposes only Ashika assumes no responsibility for possible errors

COLT VI (Z30) 04/2004 ->

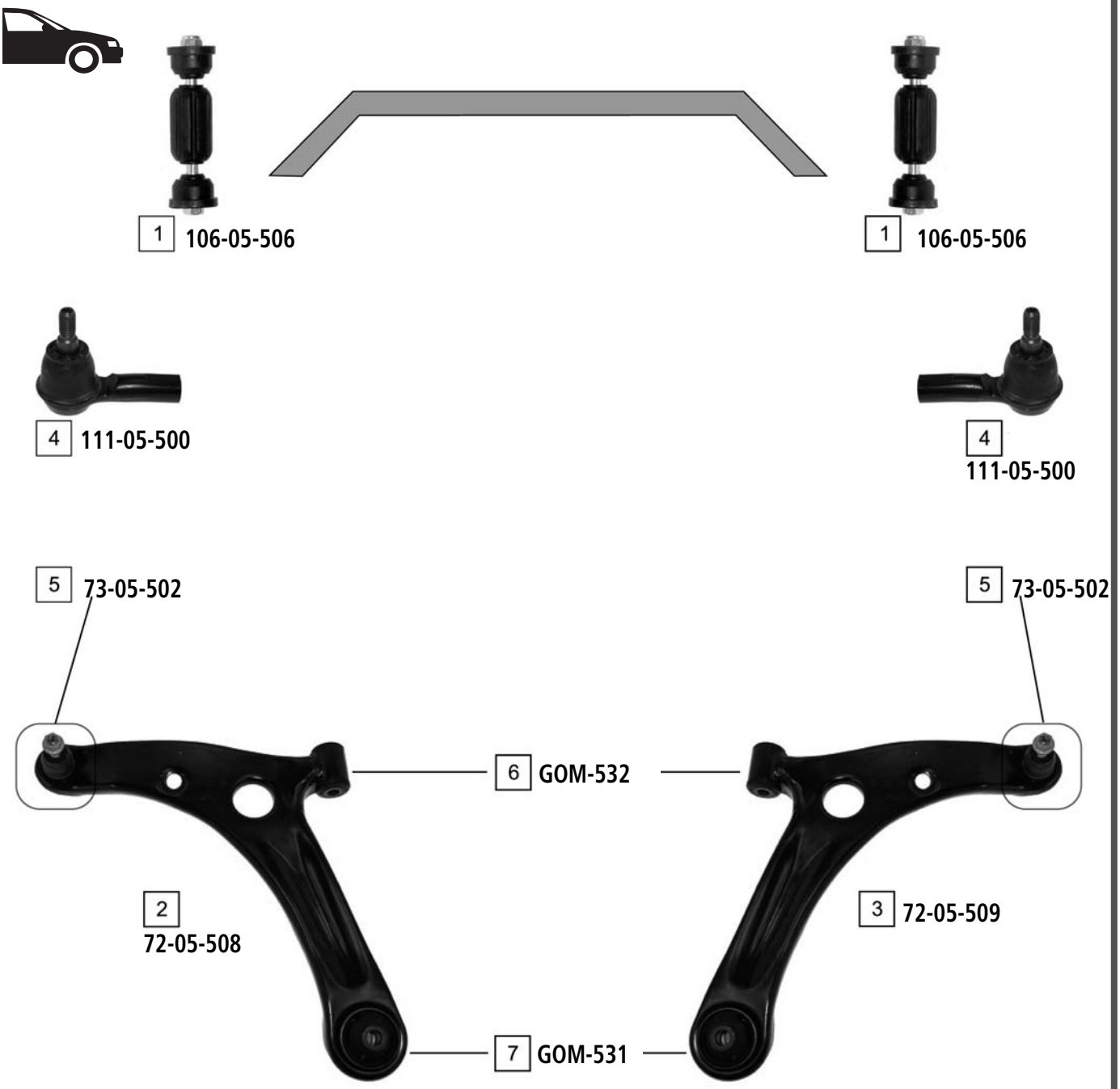

Ref	ASHIKA CODE	Description	OEM	Measures	Ref	ASHIKA CODE	Description	OEM	Measures
1	106-05-506	Stabiliser Link	4056 A052		5	73-05-502	Ball Joint	Part of 72-05-508 / 72-05-509	
2	72-05-508	TCA Left Wbj	MN 186217		6	GOM-532	Silentblock For Susp.Arm	Part of 72-05-508 / 72-05-509	
3	72-05-509	TCA Right Wbj	MN 186218		7	GOM-531	Silentblock For Susp.Arm	Part of 72-05-508 / 72-05-509	
4	111-05-500	Tie Rod End	MR 977606						

GALANT II (A16_)
SAPPORO II (A16_A)

06/1980 - 06/1984

1.6

1 **111-05-501** 2 **111-05-505** 5 **111-05-504** 1 **111-05-501**

2.0-2.0 TURBO

1 **111-05-501** 2 **111-05-505** 4 **111-05-508** 1 **111-05-501**

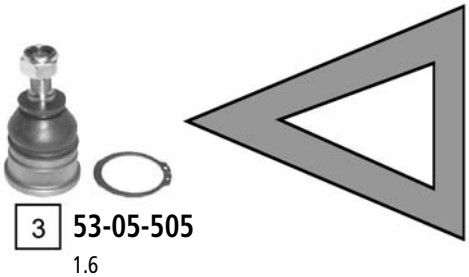

3 **53-05-505**
1.6

LOWER

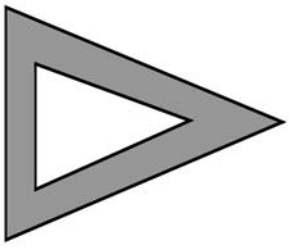

3 **53-05-505**
1.6

Ref	ASHIKA CODE	Description	OEM	Measures	Ref	ASHIKA CODE	Description	OEM	Measures
1	**111-05-501**	Tie Rod End	MA159984	c:12.5 th:MM14X1.5L	4	**111-05-508**	Tie Rod End Inner Right	MB109858	c:12.5 th:FM14X1.5L
2	**111-05-505**	Tie Rod End Inner Left	MB076003	c:12.1 th:MM14X1.5R	5	**111-05-504**	Tie Rod End Inner Right	MB076004	c:12.2 th:FM14X1.5L
3	**53-05-505**	Ball Joint Lower	MB 001696	c:15					

O.E.M. names and numbers are used for reference purposes only Ashika assumes no responsibility for possible errors

GALANT III (E1 A) 06/1984 - 12/1987
SAPPORO III (E16A) 06/1987 - 08/1990

1 **111-05-516**

2 **103-05-505**
PS

2 **103-05-505**
PS

1 **111-05-516**

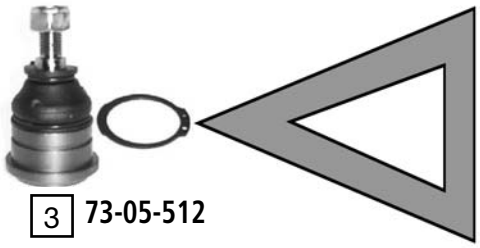

3 **73-05-512**

LOWER

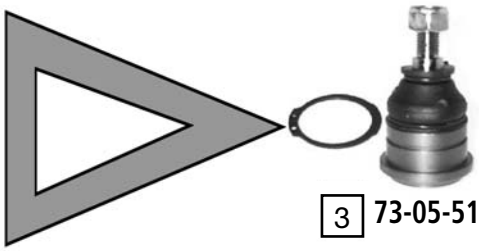

3 **73-05-512**

Ref	ASHIKA CODE	Description	OEM	Measures	Ref	ASHIKA CODE	Description	OEM	Measures
1	**111-05-516**	Tie Rod End	MB192430	c:13.45 th:FM14X1.5	3	**73-05-512**	Ball Joint Lower		c:15
2	**103-05-505**	Axial Joint	MB 266152	th:MM16X1.5R L:296					

GALANT IV (E3_A) **11/1987 - 10/1992**

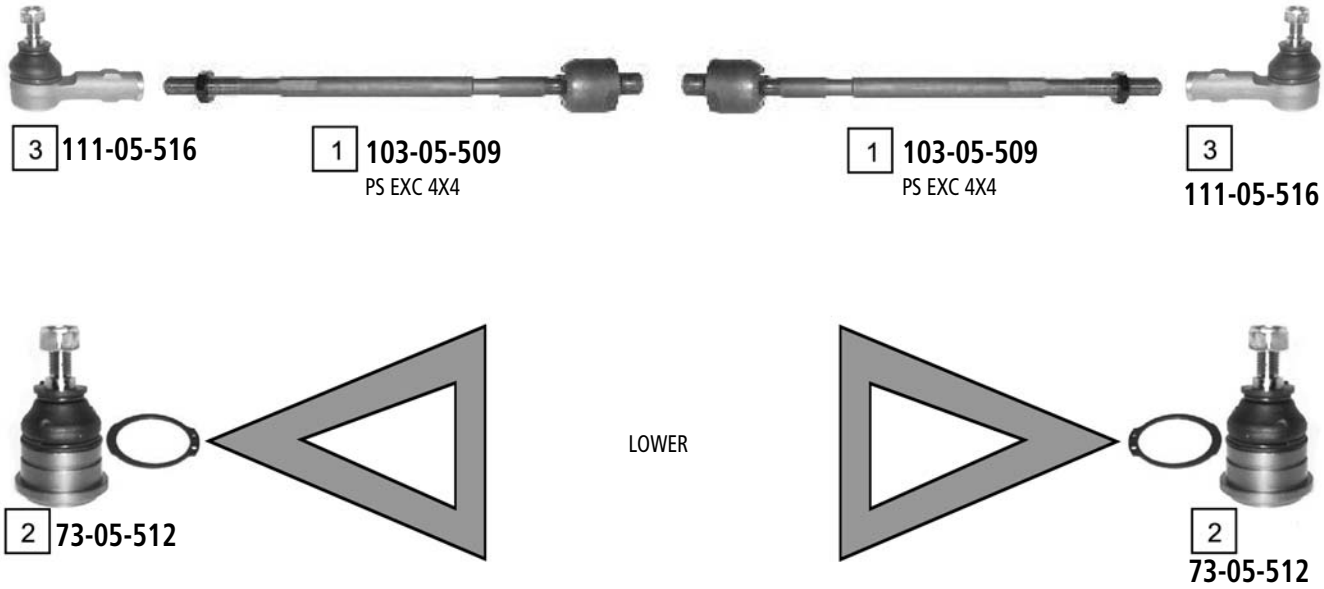

Ref	ASHIKA CODE	Description	OEM	Measures	Ref	ASHIKA CODE	Description	OEM	Measures
1	**103-05-509**	Axial Joint	MB532281	th:MM16X1.R L:314	3	**111-05-516**	Tie Rod End	MB192430	c:13.45 th:FM14X1.5
2	**73-05-512**	Ball Joint Lower		c:15					

O.E.M. names and numbers are used for reference purposes only Ashika assumes no responsibility for possible errors

GALANT V (E5_A,E7_A,E8_A) 11/1992 - 08/1996
ECLIPSE I (D2_A) 04/1991 - 12/1995

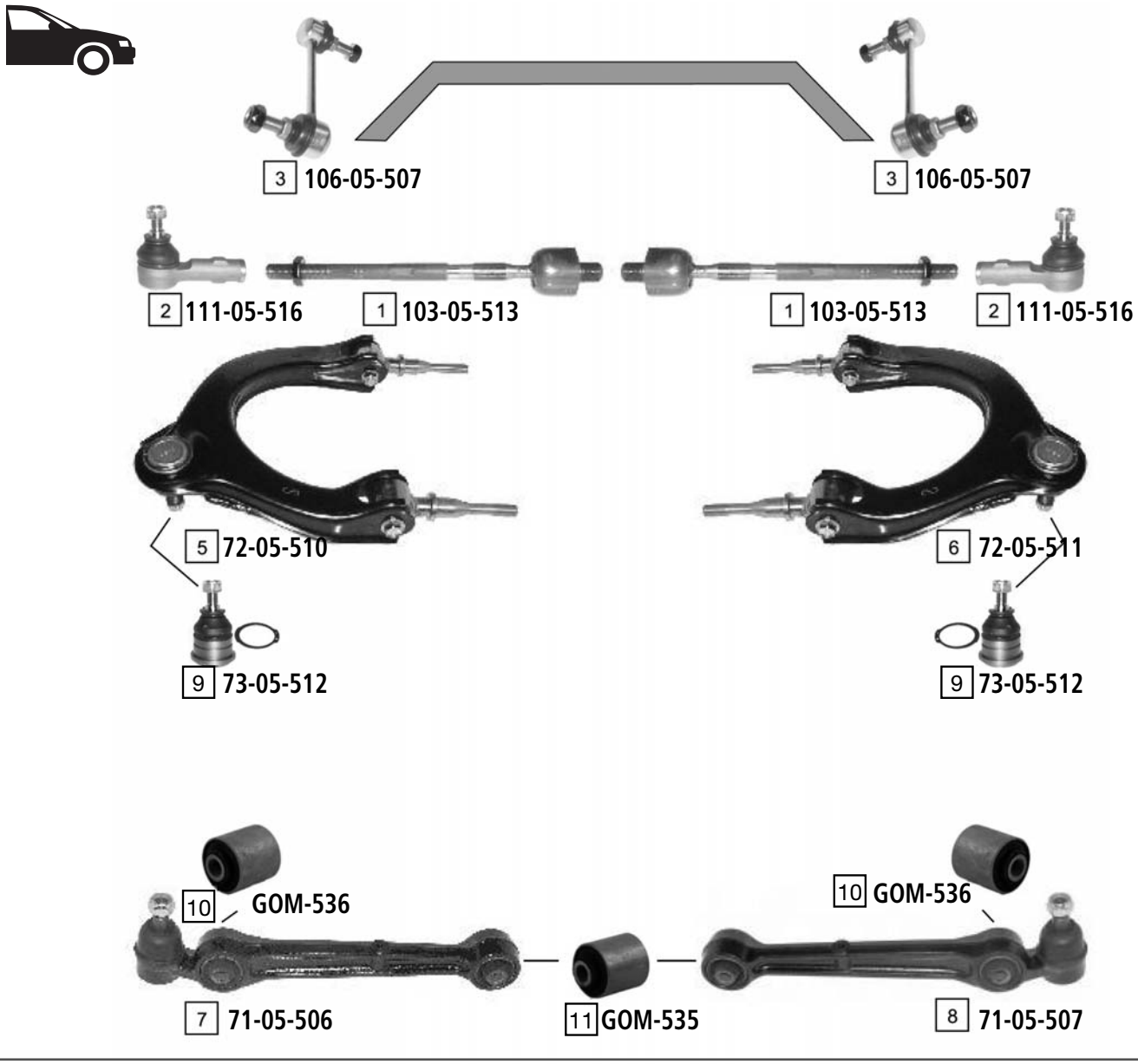

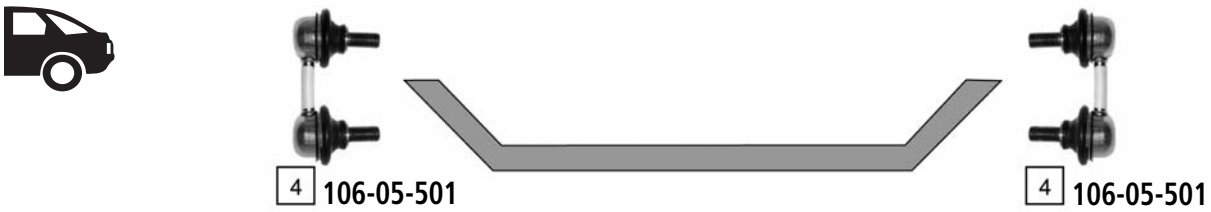

Ref	ASHIKA CODE	Description	OEM	Measures	Ref	ASHIKA CODE	Description	OEM	Measures
1	**103-05-513**	Axial Joint	MB949343	th:MM16X1.5R L.235	7	**71-05-506**	TCA Left	MB912509	c:15.3
2	**111-05-516**	Tie Rod End	MB192430	c:13.45 th:FM14X1.5	8	**71-05-507**	TCA Right	MB912510	c:16
3	**106-05-507**	Stabiliser Link	MB892981	L.120	9	**73-05-512**	Ball Joint Lower	MB-518961	c:15
4	**106-05-501**	Stabiliser Link	4056 A014	L:60	10	**GOM-536**	Silentblock For Susp.Arm	Part of 71-05-506 /71-05-507	d:40.2
5	**72-05-510**	TCA Left Wbj	MB912505	c:12.5	11	**GOM-535**	Silentblock For Susp.Arm	Part of 71-05-506 /71-05-507	d:40.2
6	**72-05-511**	TCA Right Wbj	MB912506	c:12.5					

GALANT VI (EA_) **09/1996 - 10/2004**

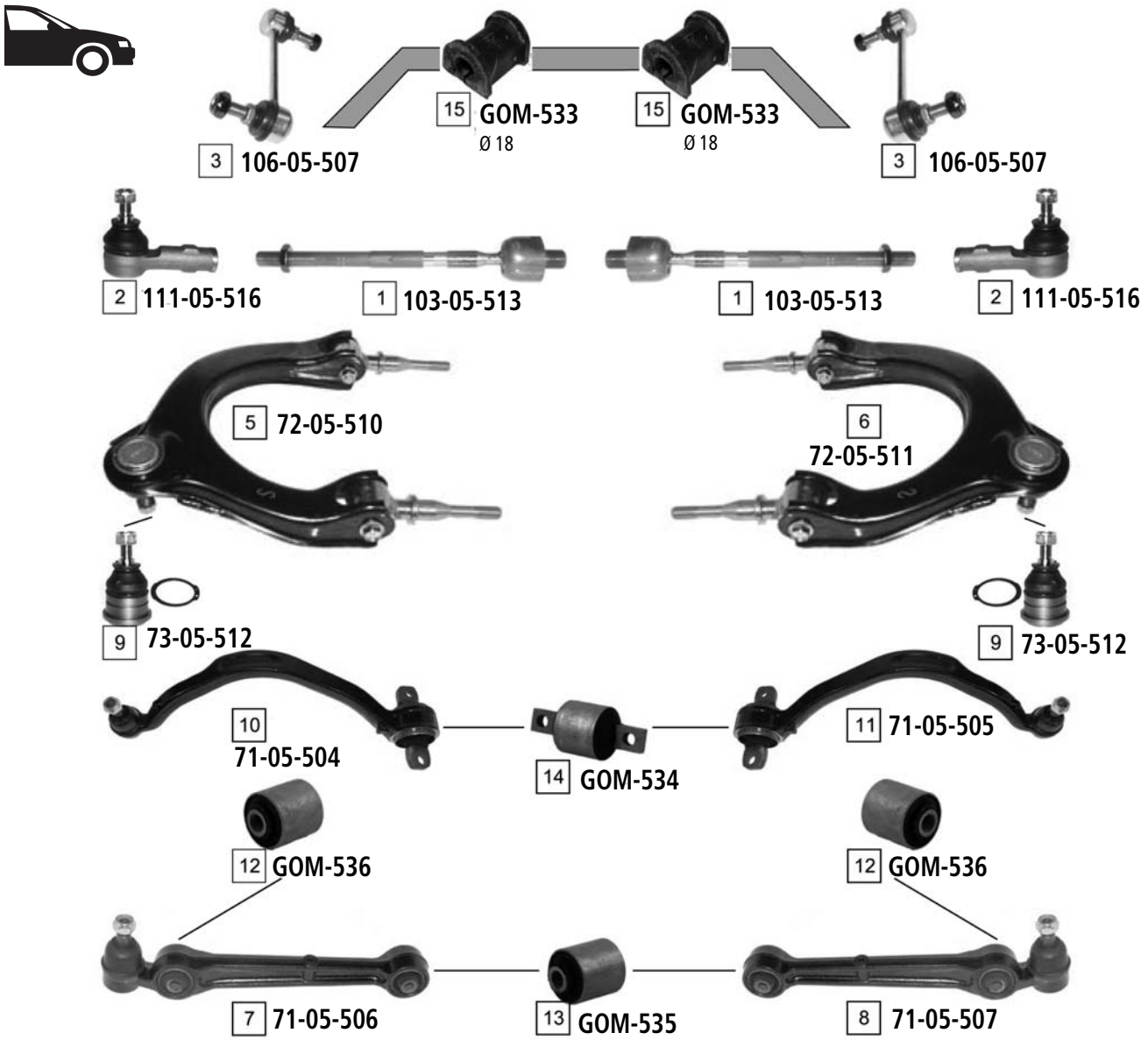

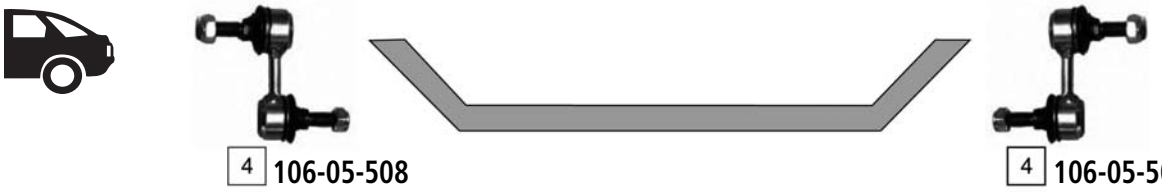

Ref	ASHIKA CODE	Description	OEM	Measures	Ref	ASHIKA CODE	Description	OEM	Measures
1	**103-05-513**	Axial Joint	MB949343	th:MM16X1.5R L.235	9	**73-05-512**	Ball Joint Lower	Part of 72-05-510 / 72-05-511	c:15
2	**111-05-516**	Tie Rod End	MB192430	c:13.45 th:FM14X1.5	10	**71-05-504**	TCA Left	MR296293	c:15.3
3	**106-05-507**	Stabiliser Link	MB892981	L.120	11	**71-05-505**	TCA Right	MR296292	c:15.3
4	**106-05-508**	Stabiliser Link	MR131732	L:60	12	**GOM-536**	Silentblock For Susp.Arm	Part of 71-05-506 / 71-05-507	d:40.2
5	**72-05-510**	TCA Left Wbj	MB912505	c:12.5	13	**GOM-535**	Silentblock For Susp.Arm	Part of 71-05-506 / 71-05-507	d:40.2
6	**72-05-511**	TCA Right Wbj	MB912506	c:12.5	14	**GOM-534**	Silentblock For Susp.Arm	Part of 71-05-504 / 71-05-505	
7	**71-05-506**	TCA Left	MB912509	c:15.3	15	**GOM-533**	Stabiliser Mounting	MR244116	d:18
8	**71-05-507**	TCA Right	MB912510	c:16					

O.E.M. names and numbers are used for reference purposes only Ashika assumes no responsibility for possible errors

L200 (L021P,L025P) **01/1979 - 12/1982**

2 **111-05-501**

3 **111-05-505**

2 **111-05-501**

4 **52-05-503**
->08/1980

5 **59-05-504**

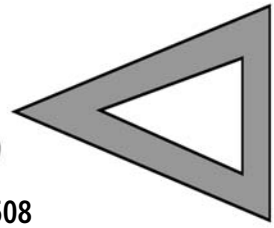

1 **73-05-508**
08/1980 ->

UPPER

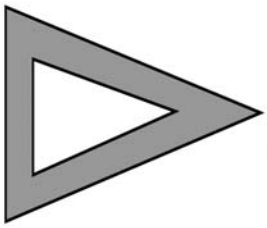

1 **73-05-508**
08/1980 ->

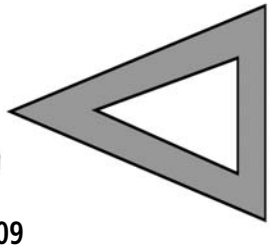

6 **53-05-509**
08/1980 ->

LOWER

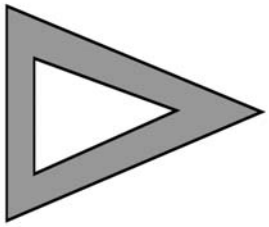

6 **53-05-509**
08/1980 ->

Ref	ASHIKA CODE	Description	OEM	Measures	Ref	ASHIKA CODE	Description	OEM	Measures
1	**73-05-508**	Ball Joint Upper	MB176309	c:15.9	4	**52-05-503**	Pitman Arm	MB076009	
2	**111-05-501**	Tie Rod End	MA159984	c:12.5 th:MM14X1.5L	5	**59-05-504**	Pitman Arm	MB241420	
3	**111-05-505**	Tie Rod End Inner Left	MB076003	c:12.1 th:14X1.5R	6	**53-05-509**	Ball Joint	MB176283	c:19.4

L 200 2X4 (K__T) **11/1986 - 08/1996**

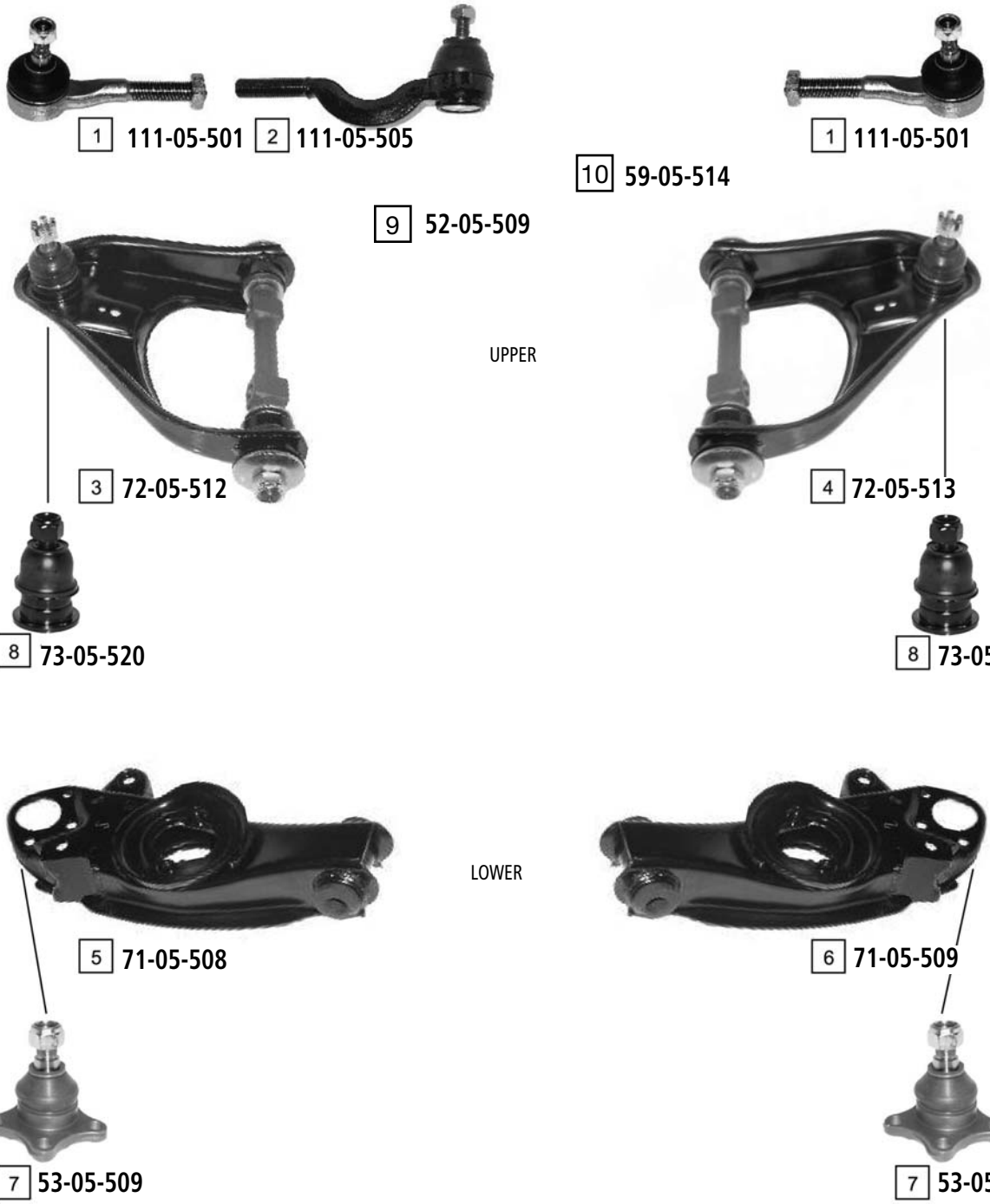

Ref	ASHIKA CODE	Description	OEM	Measures	Ref	ASHIKA CODE	Description	OEM	Measures
1	111-05-501	Tie Rod End	MA159984	c: 12.5 th: MM14x1.5L	6	71-05-509	TCA Right	MB109513	
2	111-05-505	Tie Rod End Inner Left	MB076003	c: 12.1 th: MM14x1.5R	7	53-05-509	Ball Joint	MB176283	c:19.4
3	72-05-512	TCA Left	MB527159	c: 16	8	73-05-520	Ball Joint	Part of 72-05-512 / 72-05-513	c:16
4	72-05-513	TCA Right	MB860408	c: 16	9	52-05-509	Pitman Arm	MB241166	
5	71-05-508	TCA Left	MB109512		10	59-05-514	Pitman Arm	MB527228	

O.E.M. names and numbers are used for reference purposes only Ashika assumes no responsibility for possible errors

L 200 2X4 (K62T/K64T) **06/1996 ->**

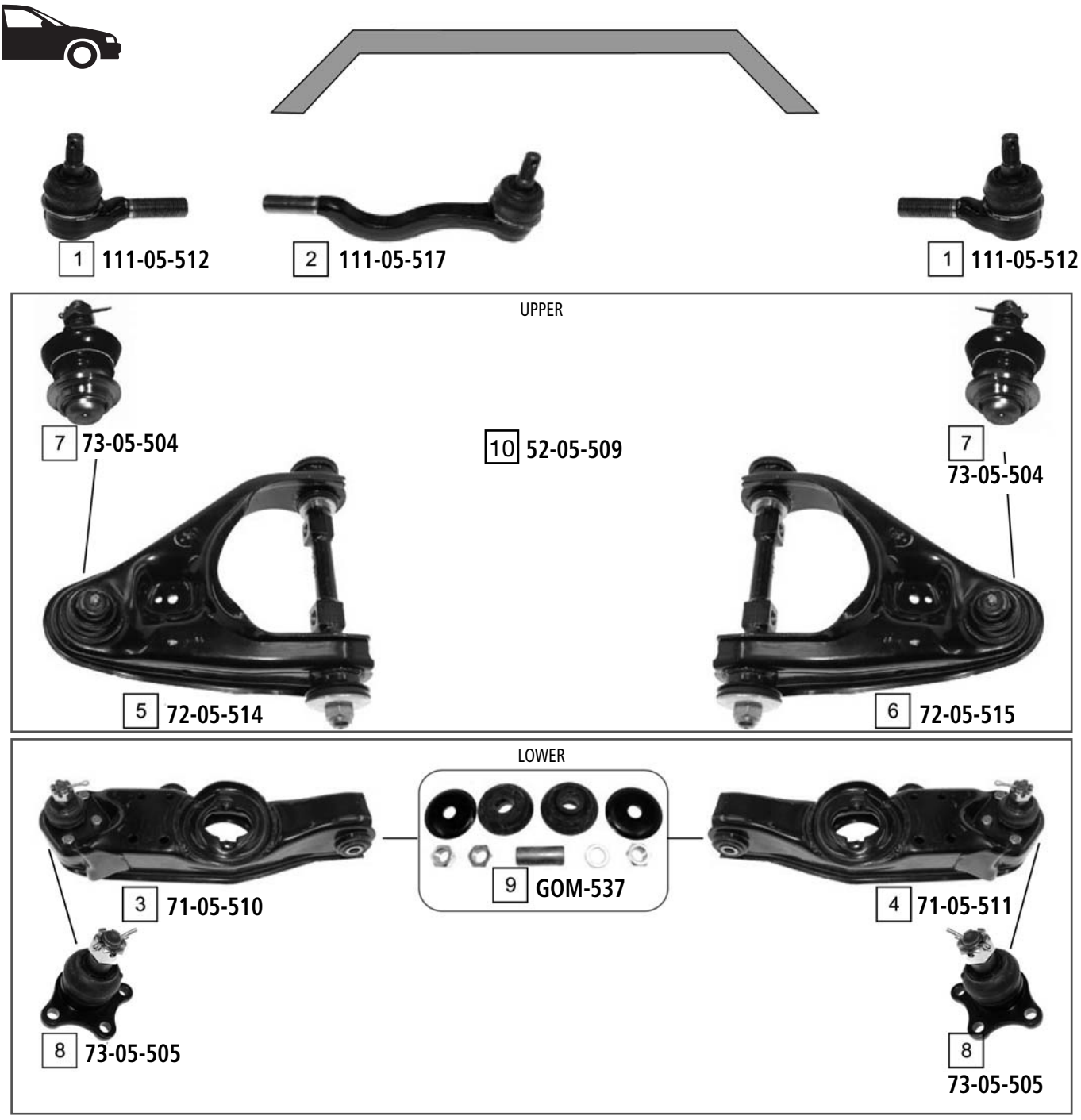

Ref	ASHIKA CODE	Description	OEM	Measures	Ref	ASHIKA CODE	Description	OEM	Measures
1	**111-05-512**	Tie Rod End Outer	MR241032	c: 13.6 th:MM 16x1.5R	6	**72-05-515**	TCA Right Wbj	MR241024	c:16
2	**111-05-517**	Tie Rod End Inner	MR241031	c: 13.8 th:MM 16x1.5R	7	**73-05-504**	Ball Joint	Part of 72-05-514 / 72-05-515	c:16
3	**71-05-510**	TCA Left Wbj	MR241025	c: 19.5	8	**73-05-505**	Ball Joint	MR241027	c:19.5
4	**71-05-511**	TCA Right Wbj	MR241026	c: 19.5	9	**GOM-537**	Silentblock For Susp.Arm	MR234247	
5	**72-05-514**	TCA Left Wbj	MR241023	c: 16	10	**52-05-509**	Pitman Arm	MB241166	

L 200 4X4 (K__T) 11/1986 - 08/1996

2 111-05-509

3 111-05-510

3 111-05-510

2 111-05-509

6 52-05-508

1 59-05-510

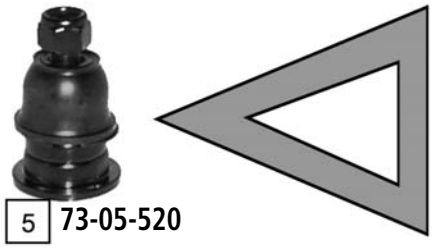

5 73-05-520

UPPER

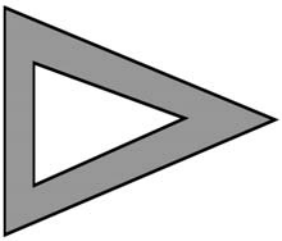

5 73-05-520

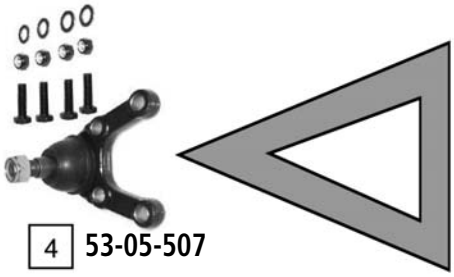

4 53-05-507

LOWER

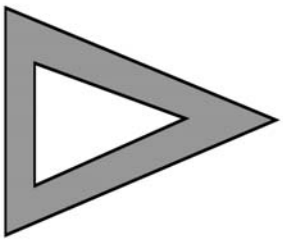

4 53-05-507

Ref	ASHIKA CODE	Description	OEM	Measures	Ref	ASHIKA CODE	Description	OEM	Measures
1	**59-05-510**	Pitman Arm	MB241423		4	**53-05-507**	Ball Joint	MB176308	c:19.4
2	**111-05-509**	Tie Rod End	MB241171	c:13.6 th:MM16X1.5L	5	**73-05-520**	Ball Joint		c:16
3	**111-05-510**	Tie Rod End	MB241206	c:13.8 th:M16X1.5R	6	**52-05-508**	Pitman Arm	MB241168	

O.E.M. names and numbers are used for reference purposes only Ashika assumes no responsibility for possible errors

L 200 (K74T/K75T) 4X4 06/1996 ->

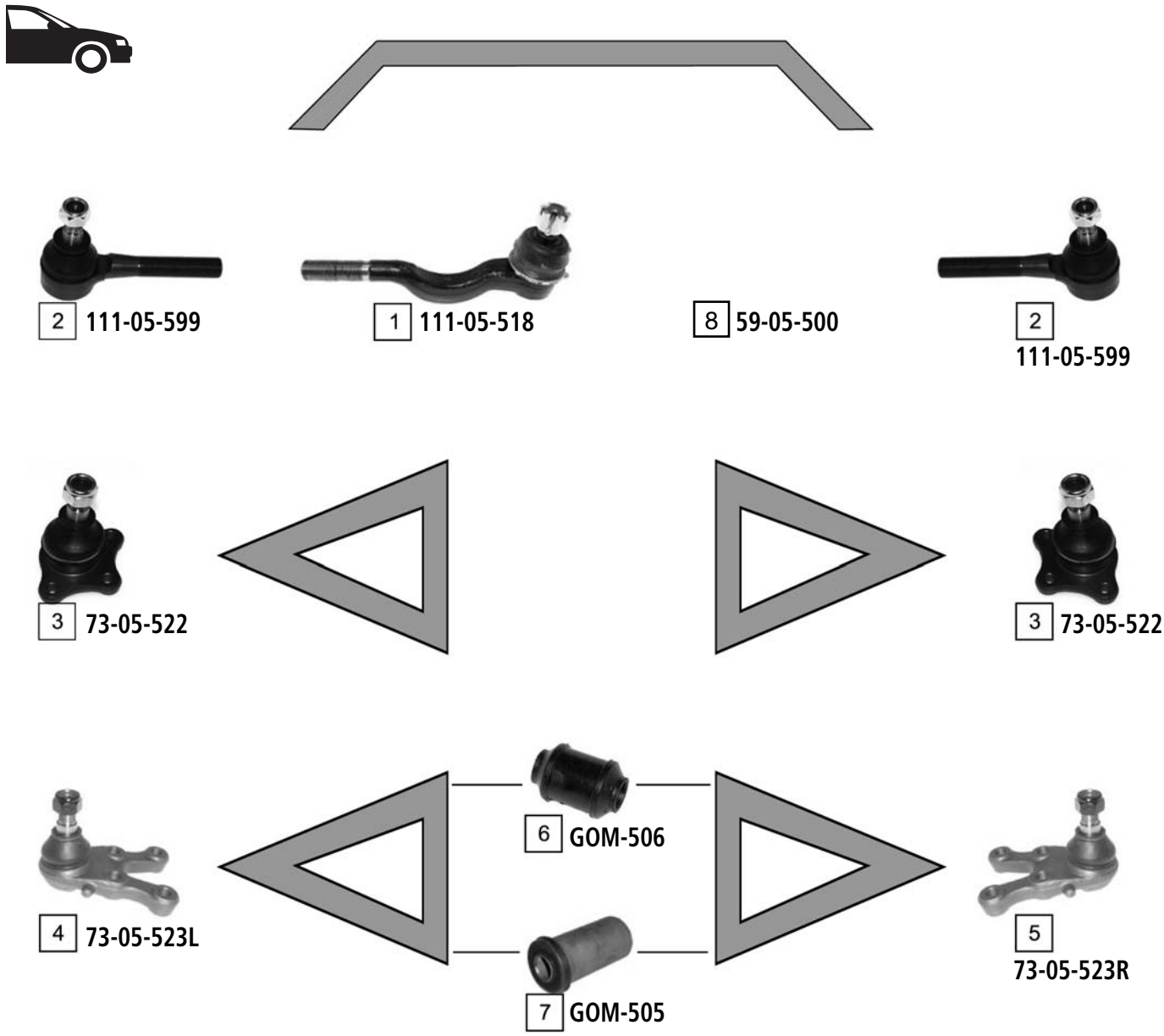

Ref	ASHIKA CODE	Description	OEM	Measures	Ref	ASHIKA CODE	Description	OEM	Measures
1	**111-05-518**	Tie Rod End Inner	MR296274	c: 13.6 th MM 16x1.5R	5	**73-05-523R**	Ball Joint Lower Right	MB831038	c:19.3
2	**111-05-599**	Tie Rod End	MB831043	c: 13.6 th M 16x1.5L	6	**GOM-506**	Silentblock For Susp.Arm	MB109684	d:40
3	**73-05-522**	Ball Joint Upper	MB-860830	c:16.5	7	**GOM-505**	Silentblock For Susp.Arm	MB109662	d:40.4
4	**73-05-523L**	Ball Joint Lower Left	MB831037	c:19.3	8	**59-05-500**	Pitman Arm	MR296272	

L 200 (TRITON) 05/2006 ->

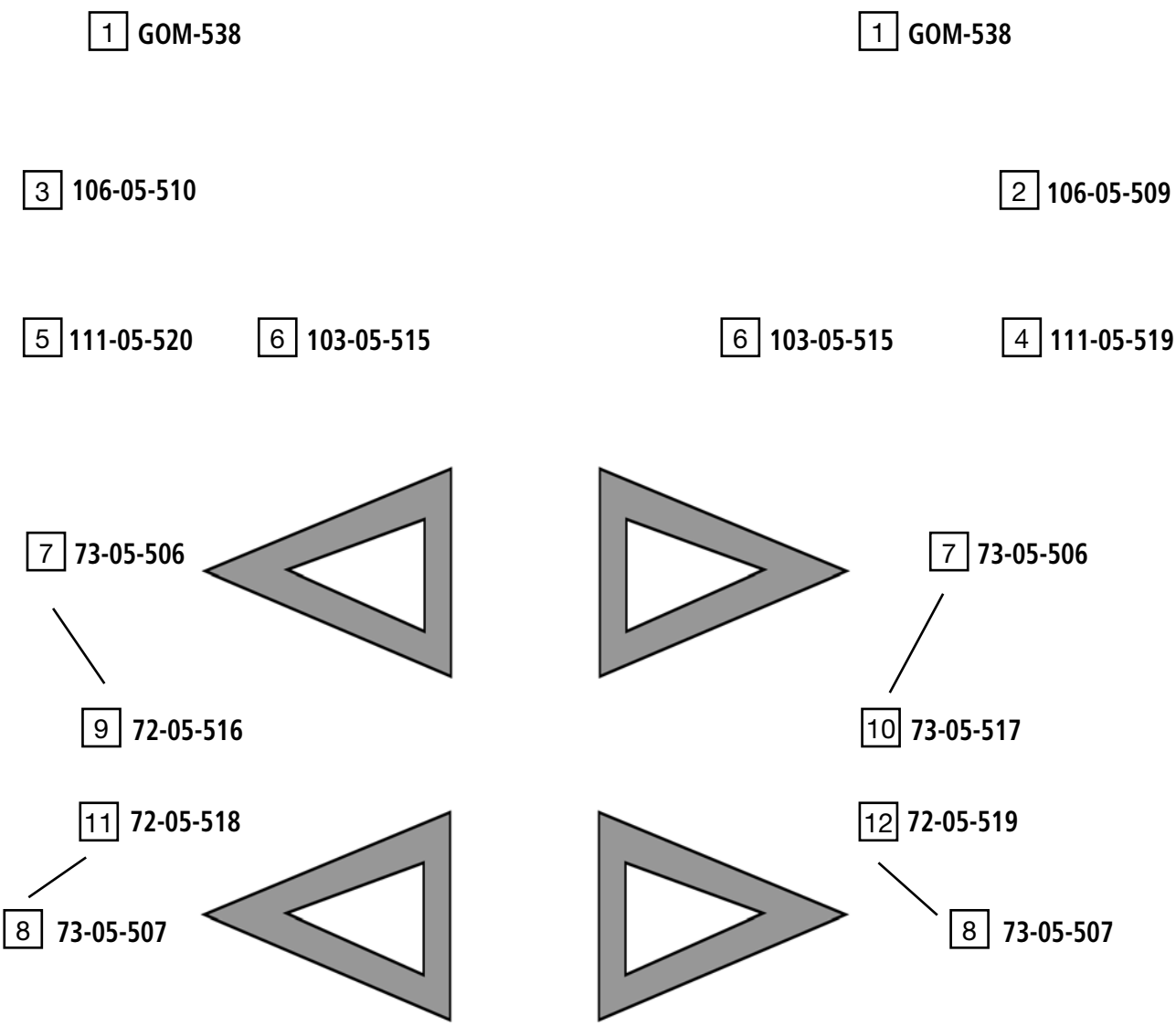

Ref	ASHIKA CODE	Description	OEM	Measures	Ref	ASHIKA CODE	Description	OEM	Measures
1	GOM-538	Silentblock For Susp.Arm	MR992317		7	73-05-506	Ball Joint	4010A015	
2	106-05-509	Stabiliser Link	MR992310		8	73-05-507	Ball Joint	4013A090	
3	106-05-510	Stabiliser Link	MR992309		9	72-05-516	TCA	4010A013	
4	111-05-509	Tie Rod End	4422A010		10	73-05-517	Ball Joint	4010A014	
5	111-05-520	Tie Rod End	4422A009		11	72-05-518	TCA	4013A087	
6	103-05-515	Axial Joint	4410A173		12	72-05-519	TCA	4013A088	

O.E.M. names and numbers are used for reference purposes only Ashika assumes no responsibility for possible errors

L300 (L03_,L06_) 06/1979 - 04/1994

2 **111-0H-H53**
ALL

3 **111-05-522**
09/1982->

3 **111-05-522**
09/1982->

2 **111-0H-H53**
ALL

8 **59-05-511**
->1986

7 **73-05-503**
->09/1983

1 **59-05-513**
LHD 1986->

7 **73-05-503**
->09/1983

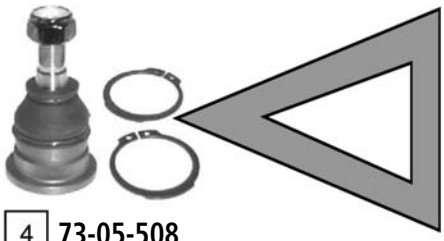

4 **73-05-508**
->10/1983

10 **52-05-599**
->12/1983

UPPER

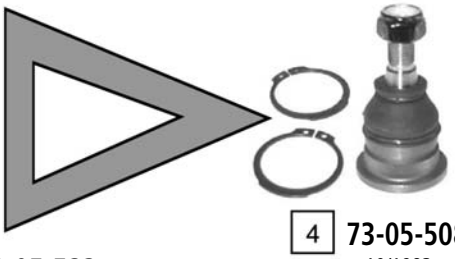

9 **52-05-523**
->12/1983

4 **73-05-508**
->10/1983

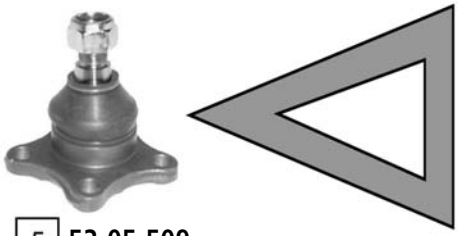

5 **53-05-509**
10/1983 ->

6 **53-05-504**
-> 09/1983

LOWER

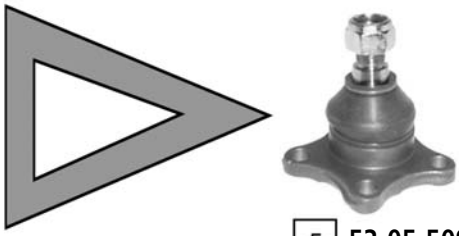

6 **53-05-504**
-> 09/1983

5 **53-05-509**
10/1983 ->

Ref	ASHIKA CODE	Description	OEM	Measures	Ref	ASHIKA CODE	Description	OEM	Measures
1	59-05-513	Pitman Arm	MB315770		6	53-05-504	Ball Joint	MB175544	
2	111-0H-H53	Tie Rod End	56820-21000	c:13.45 th:FM14X1.5	7	73-05-503	Ball Joint	MB112477	
3	111-05-522	Tie Rod End	MB288119	c:13.8 th:FM14X1.5L	8	59-05-511	Pitman Arm	MB166429	
4	73-05-508	Ball Joint Upper	MB176309	c:15.9	9	52-05-523	Pitman Arm	MB166423	
5	53-05-509	Ball Joint	MB176283	c:19.4	10	52-05-599	Pitman Arm	MB166424	

L300 (PO_) 11/1986 - 05/1999

MS

2 111-05-515 3 103-05-510 3 103-05-510 2 111-05-515

PS

2 111-05-515 1 103-05-505 1 103-05-505 2 111-05-515

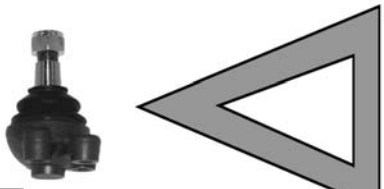

UPPER

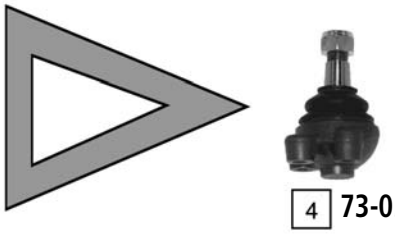

4 73-05-513 4 73-05-513

LOWER

6 111-0H-H005 8 GOM-H14 7 111-0H-H004

5 73-05-514

5 73-05-514

Ref	ASHIKA CODE	Description	OEM	Measures	Ref	ASHIKA CODE	Description	OEM	Measures
1	**103-05-505**	Axial Joint	MB266152	th:MM16X1.5R L:296	5	**73-05-514**	Ball Joint Lower	MB527384-01	c:19.6
2	**111-05-515**	Tie Rod End	MB527650	c:13.7 th:FM14X1.5L	6	**111-0H-H005**	TCA	MB598017	c:19.5
3	**103-05-510**	Axial Joint	MB532971	th:MM17X1R L:290	7	**111-0H-H004**	TCA	MB598018	c:19.5
4	**73-05-513**	Ball Joint Upper	MB527349	c:17.6	8	**GOM-H14**	Silentblock For Susp.Arm	Part of 111-0H-H005 / 111-0H-H004	d:45.8

O.E.M. names and numbers are used for reference purposes only Ashika assumes no responsibility for possible errors

L300 (L035GV/W,L037GV/W,L038GV/W) 10/1982 - 06/19986
4X4

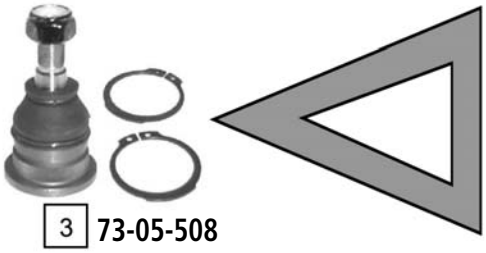

UPPER

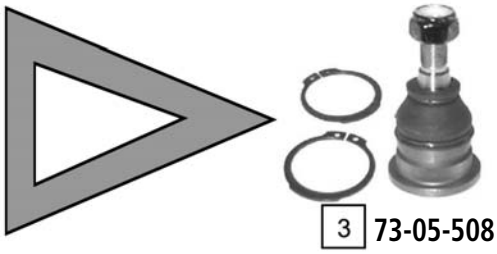

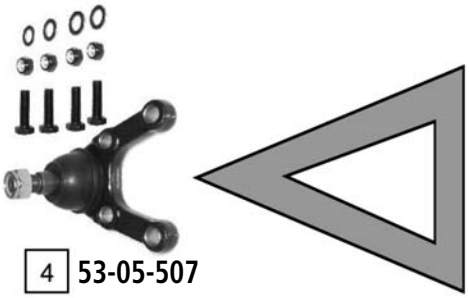

LOWER

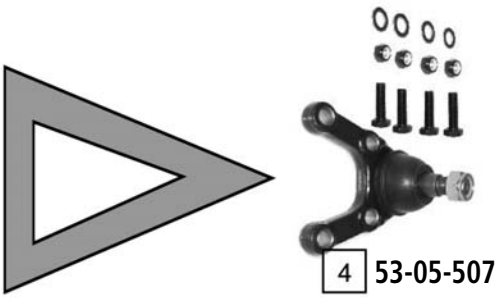

Ref	ASHIKA CODE	Description	OEM	Measures	Ref	ASHIKA CODE	Description	OEM	Measures
1	**111-05-509**	Tie Rod End	MB241171	c:13.6 th:MM16X1.5L	3	**73-05-508**	Ball Joint Upper	MB176309	c:15.9
2	**111-05-510**	Tie Rod End	MB241206	c:13.8 th:MM16X1.5R	4	**53-05-507**	Ball Joint Lower	MB176308	c:19.4

L300 (L2_V,P45W) 4X4 **06/1986 ->**

1 **111-05-515**

1 **111-05-515**

2 **73-05-513**

UPPER

2 **73-05-513**

3 **73-05-515L**

LOWER

4 **73-05-515R**

Ref	ASHIKA CODE	Description	OEM	Measures	Ref	ASHIKA CODE	Description	OEM	Measures
1	**111-05-515**	Tie Rod End	MB527650	c:13.7 th:FM14X1.5L	3	**73-05-515L**	Ball Joint Left	MB527351	c:19.4
2	**73-05-513**	Ball Joint Upper	MB527349	c:17.6	4	**73-05-515R**	Ball Joint Right	MB527352	c:19.4

O.E.M. names and numbers are used for reference purposes only Ashika assumes no responsibility for possible errors

LANCER I (A17_) **04/1979 - 01/1984**

EXC TURBO

1 **111-05-501** 2 **111-05-505** 3 **111-05-504** 1 **111-05-501**

TURBO

1 **111-05-501** 2 **111-05-505** 5 **111-05-508** 1 **111-05-501**

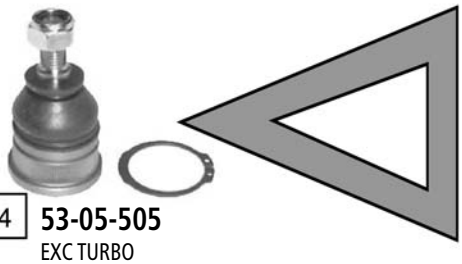

4 **53-05-505**
EXC TURBO

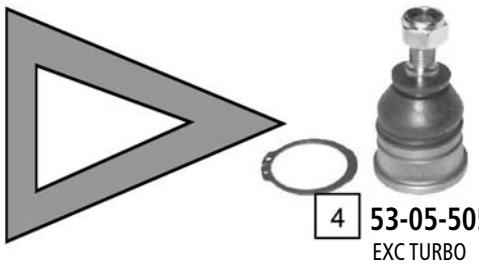

4 **53-05-505**
EXC TURBO

Ref	ASHIKA CODE	Description	OEM	Measures	Ref	ASHIKA CODE	Description	OEM	Measures
1	**111-05-501**	Tie Rod End	MA159984	c:12.5 th:MM14X1.5L	4	**53-05-505**	Ball Joint Lower	MB 001696	c: 15
2	**111-05-505**	Tie Rod End Inner Left	MB076003	c:12.1 th:MM14X1.5R	5	**111-05-508**	Tie Rod End Inner Right	MB109858	c: 12.5 th: FM14X1.5L
3	**111-05-504**	Tie Rod End Inner Right	MB076004	c:12.2 th:FM14X1.5L					

LANCER III (C1_A, C6_A)
LANCER III S.W. (C1_V, C3_V)

02/1984 - 04/1989

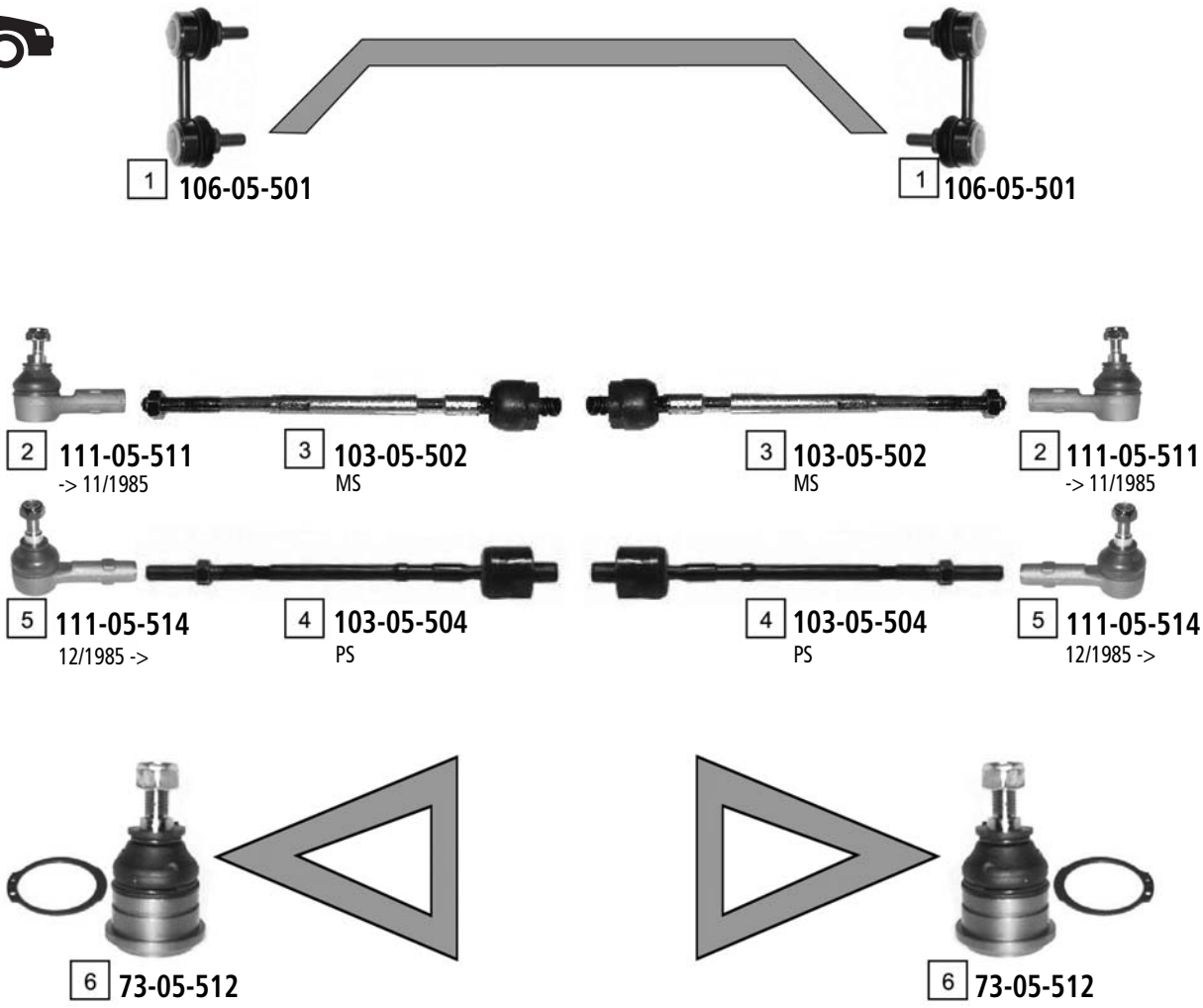

Ref	ASHIKA CODE	Description	OEM	Measures	Ref	ASHIKA CODE	Description	OEM	Measures
1	**106-05-501**	Stabiliser Link	4056 A014	L:60	4	**103-05-504**	Axial Joint	MB350718	
2	**111-05-511**	Tie Rod End	MB241982	c:13.3 th:FM12X1.25	5	**111-05-514**	Tie Rod End	MB527169	c:13.4 th:FM12X1.25
3	**103-05-502**	Axial Joint	MB347666	th:MM12X1.25R L:278	6	**73-05-512**	Ball Joint Lower	MB-518961	c:15

O.E.M. names and numbers are used for reference purposes only Ashika assumes no responsibility for possible errors

LANCER IV (C6_A, C7_A) **05/1988 - 05/1992**

1 106-05-504 1 106-05-504

MS

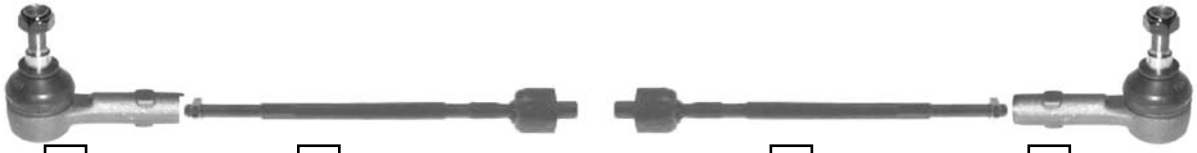

2 111-05-514 3 103-05-508 3 103-05-508 2 111-05-514

PS

2 111-05-514 4 103-05-599 4 103-05-599 2 111-05-514

5 73-05-512

5 73-05-512

Ref	ASHIKA CODE	Description	OEM	Measures	Ref	ASHIKA CODE	Description	OEM	Measures
1	**106-05-504**	Stabiliser Link	MB518780	L:88	4	**103-05-599**	Axial Joint	MB910934	th:MM16X1.5R L:309
2	**111-05-514**	Tie Rod End	MB527169	c:13.4 th:FM12X1.25	5	**73-05-512**	Ball Joint Lower	MB-518961	c:15
3	**103-05-508**	Axial Joint	MB553249	th:MM16X1.5R L:298					

MITSUBISHI LANCER

LANCER V (CB/D_A) 06/1992 - 12/1995
LANCER VI (CK/P_A) 12/1995 - 08/2003

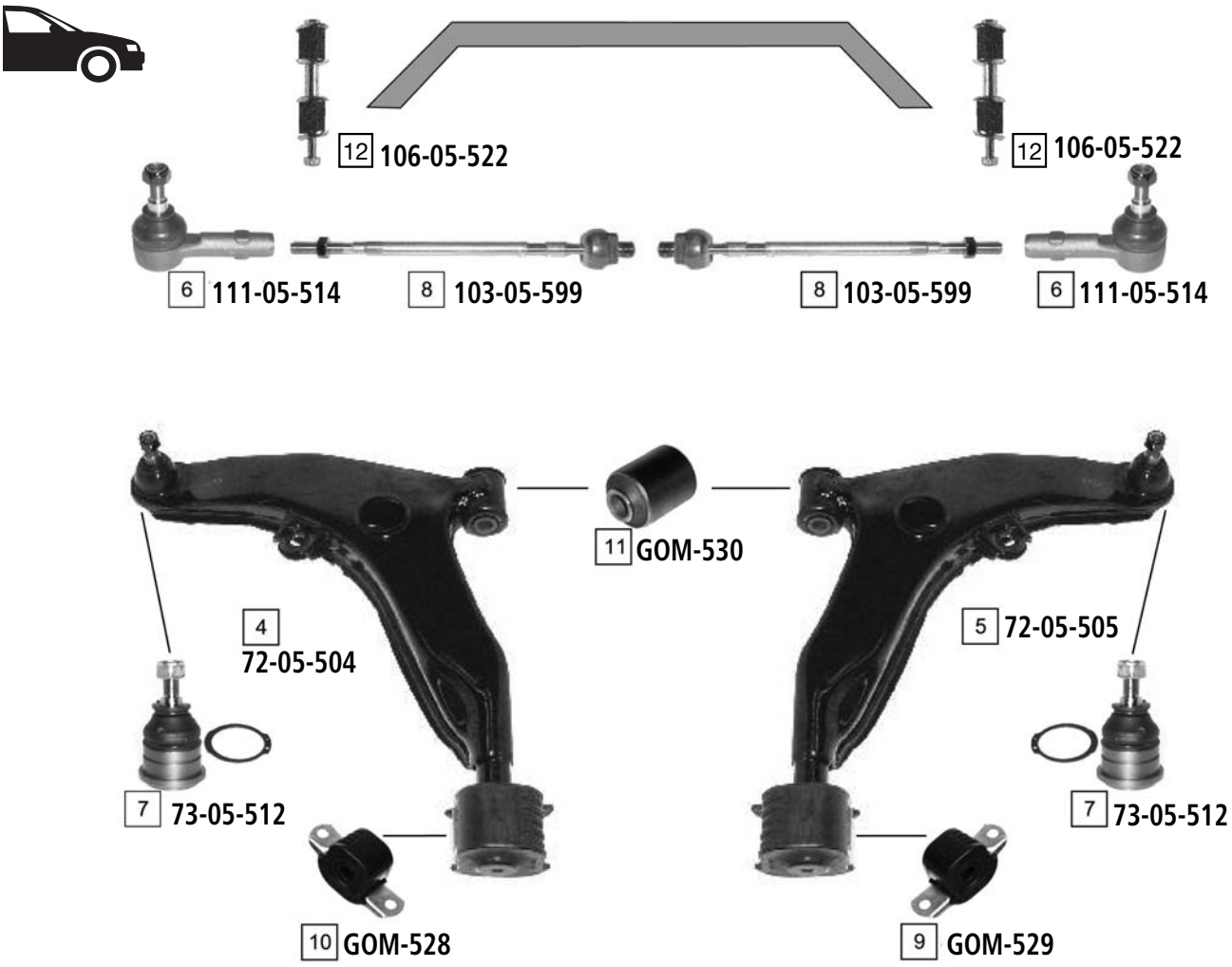

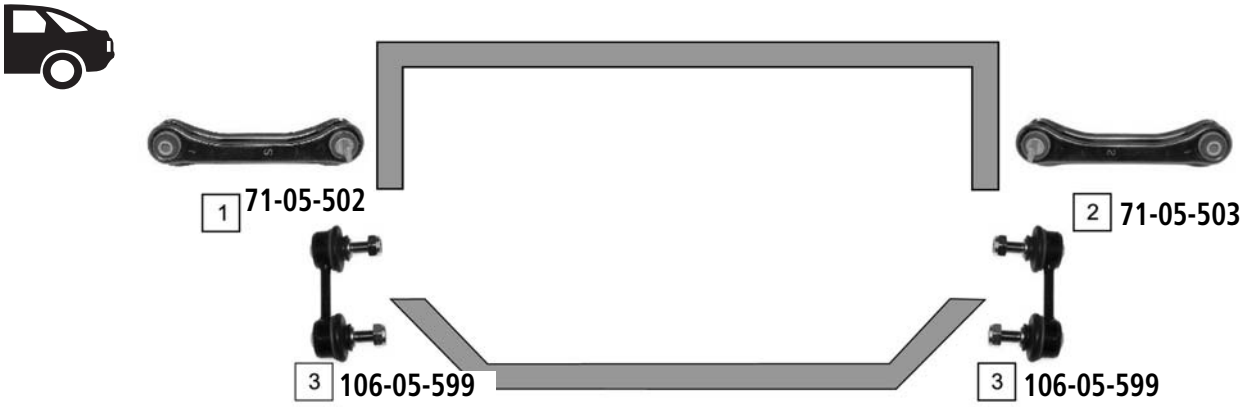

Ref	ASHIKA CODE	Description	OEM	Measures	Ref	ASHIKA CODE	Description	OEM	Measures
1	71-05-502	TCA Left	MB809220	c:15	7	73-05-512	Ball Joint Lower	Part of 72-05-504 /72-05-505	c:15
2	71-05-503	TCA Right	MB809221	c:15	8	103-05-599	Axial Joint	MB910934	th:MM16X1.5R L:309
3	106-05-599	Stabiliser Link	MB809354	L:75	9	GOM-529	Silentblock For Susp.Arm	MB808910	
4	72-05-504	TCA Left	MB912077	c:15	10	GOM-528	Silentblock For Susp.Arm	MB808909	
5	72-05-505	TCA Right	MB912078	c:15	11	GOM-530	Silentblock For Susp.Arm	Part of 72-05-504 /72-05-505	
6	111-05-514	Tie Rod End	MB527169	c:13.4 th:FM12X1.25	12	106-05-522	Stabiliser Link	MB241974	L:131

O.E.M. names and numbers are used for reference purposes only Ashika assumes no responsibility for possible errors

LANCER VII (CS__) 09/2003 ->

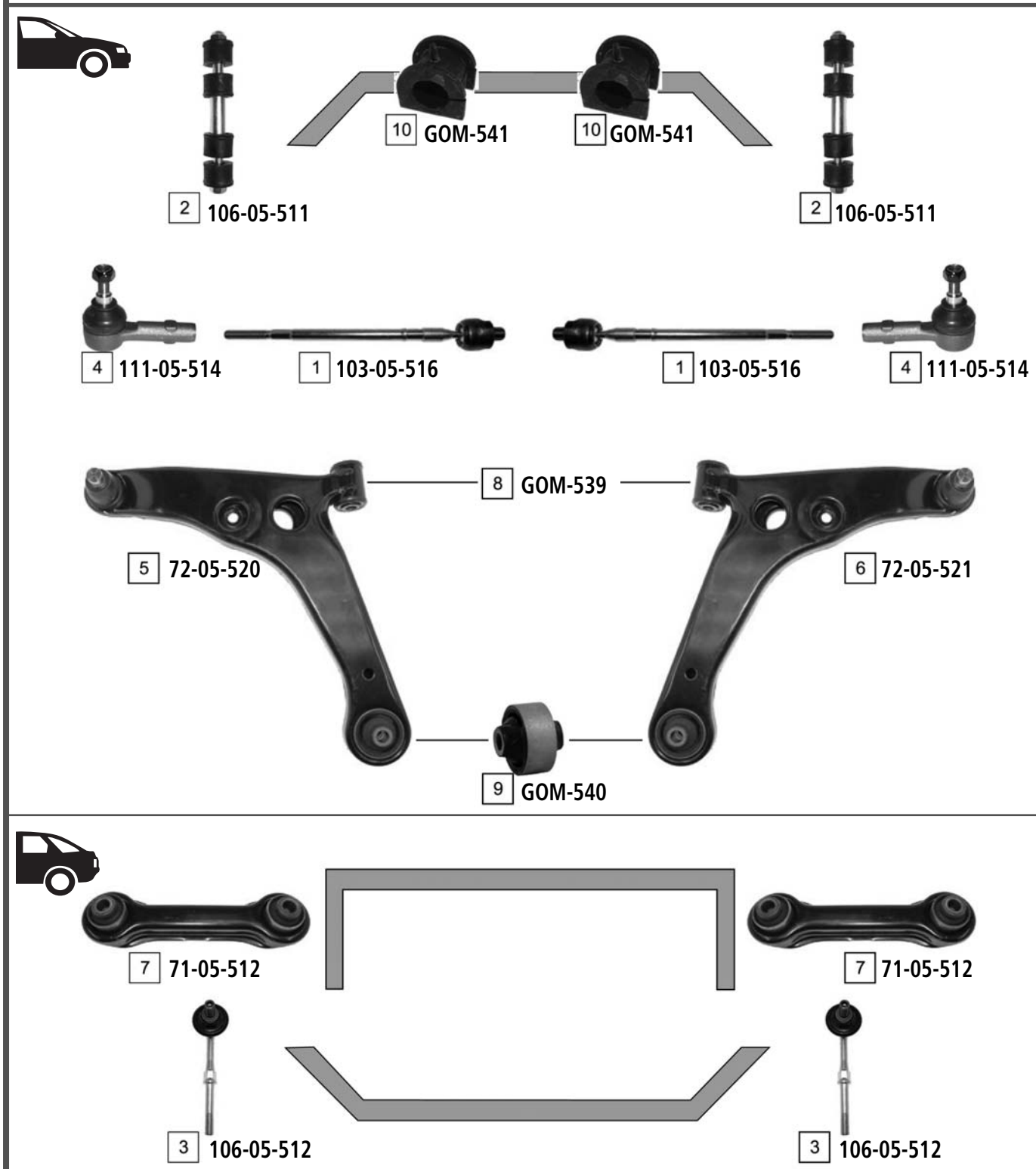

Ref	ASHIKA CODE	Description	OEM	Measures	Ref	ASHIKA CODE	Description	OEM	Measures
1	103-05-516	Axial Joint	MR491358	th:MM16X1.5R L:311	6	72-05-521	TCA Right Wbj	MR403420	c:20
2	106-05-511	Stabiliser Link	MR954887	L:136	7	71-05-512	TCA	MR403485	-
3	106-05-512	Stabiliser Link	MR403771	L:115	8	GOM-539	Silentblock For Susp.Arm	Part of 72-05-520 / 72-05-521	-
4	111-05-514	Tie Rod End	MB527169	c:13.4 th:FM12X1.25	9	GOM-540	Silentblock For Susp.Arm	MR403441	-
5	72-05-520	TCA Left Wbj	MR403419	c:20	10	GOM-541	Stabiliser Mounting	MN100250	d:26

OUTLANDER **02/2007 ->**

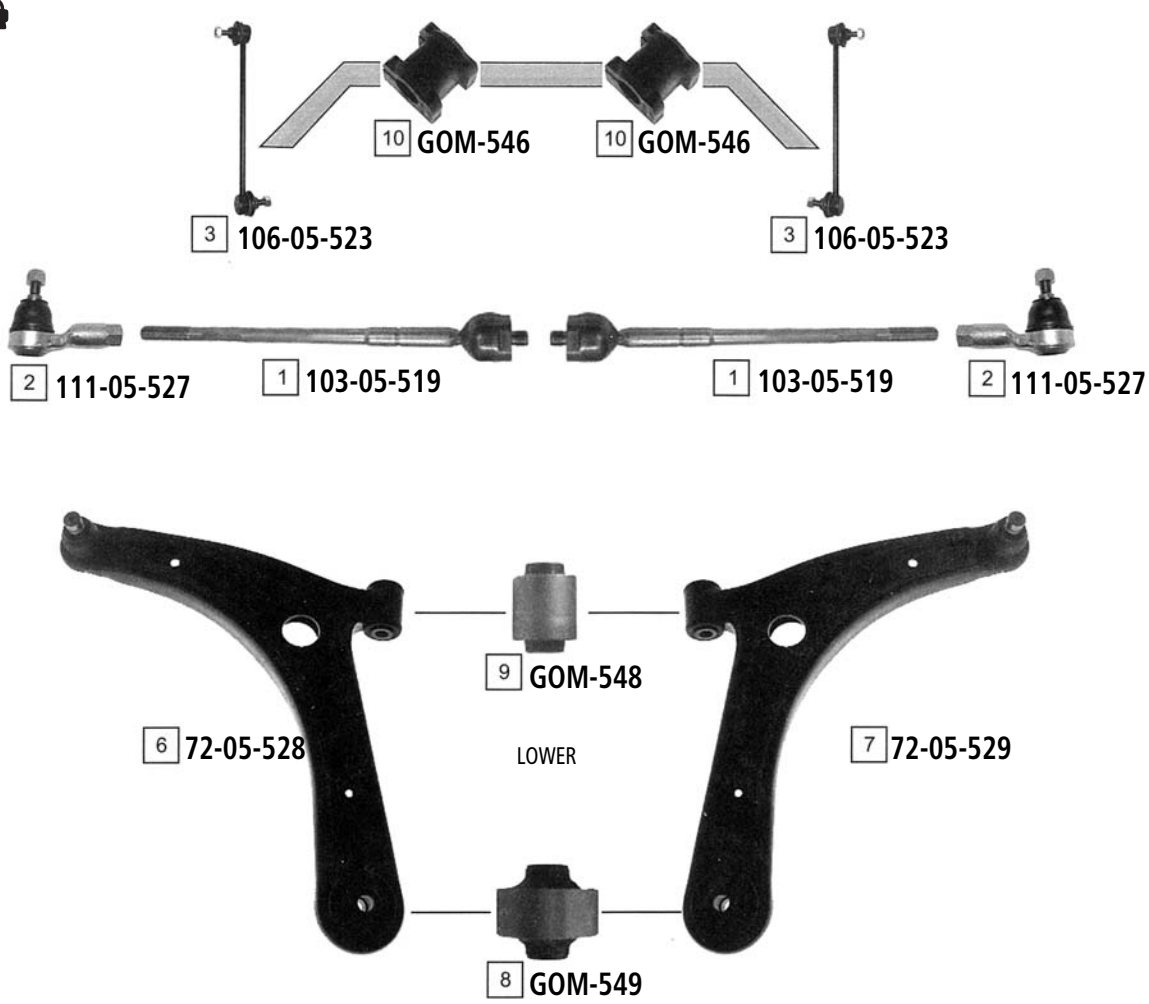

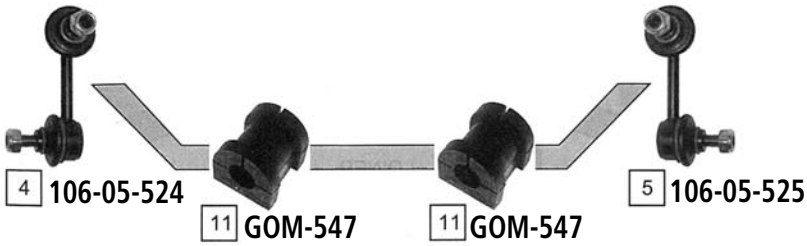

Ref	ASHIKA CODE	Description	OEM	Measures	Ref	ASHIKA CODE	Description	OEM	Measures
1	**103-05-519**	Axial Joint	4422A012	-	7	**72-05-529**	TCA Right WBJ	4013A010	c:20
2	**111-05-527**	Tie Rod End	4422A018	c:13.4 th:fm14x1.5R	8	**GOM-549**	Silentblock For Susp.Arm	MN184133	d:60
3	**106-05-523**	Stabiliser Link	MN101368	L:265	9	**GOM-548**	Silentblock For Susp.Arm	MN125871	-
4	**106-05-524**	Stabiliser Link Left	4156A014	L:80	10	**GOM-546**	Stabiliser Mounting	4056A079	
5	**106-05-525**	Stabiliser Link Right	MN184194	L:80	11	**GOM-547**	Stabiliser Mounting	4156A028	-
6	**72-05-528**	TCA Left WBJ	4013A009	c:20					

O.E.M. names and numbers are used for reference purposes only Ashika assumes no responsibility for possible errors

PAJIERO I (L04_G, L14_G) **03/1983 - 02/1991**

2 111-05-509 3 111-05-510 3 111-05-510 2 111-05-509

8 52-05-510 1 59-05-508

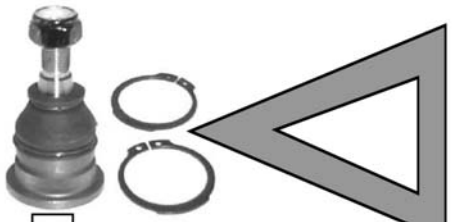

4 73-05-508

UPPER

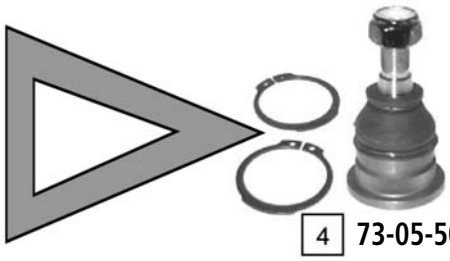

4 73-05-508

5 53-05-507

6 GOM-506

LOWER

7 GOM-505

5 53-05-507

Ref	ASHIKA CODE	Description	OEM	Measures	Ref	ASHIKA CODE	Description	OEM	Measures
1	59-05-508	Pitman Arm	MB241830		5	53-05-507	Ball Joint Lower	MB176308	c:19.4
2	111-05-509	Tie Rod End	MB241171	c:13.6 th:MM16X1.5L	6	GOM-506	Silentblock For Susp.Arm	MB109684	d:40
3	111-05-510	Tie Rod End	MB241206	c:13.8 th:MM16X1.5R	7	GOM-505	Silentblock For Susp.Arm	MB109662	d:40.4
4	73-05-508	Ball Joint Upper	MB176309	c:15.9	8	52-05-510	Pitman Arm	MB241973	

PAJERO II (V2_W, V4_W) 03/1991 - 04/2000
PAJERO CLASSIC (V2_W) 07/2002 ->

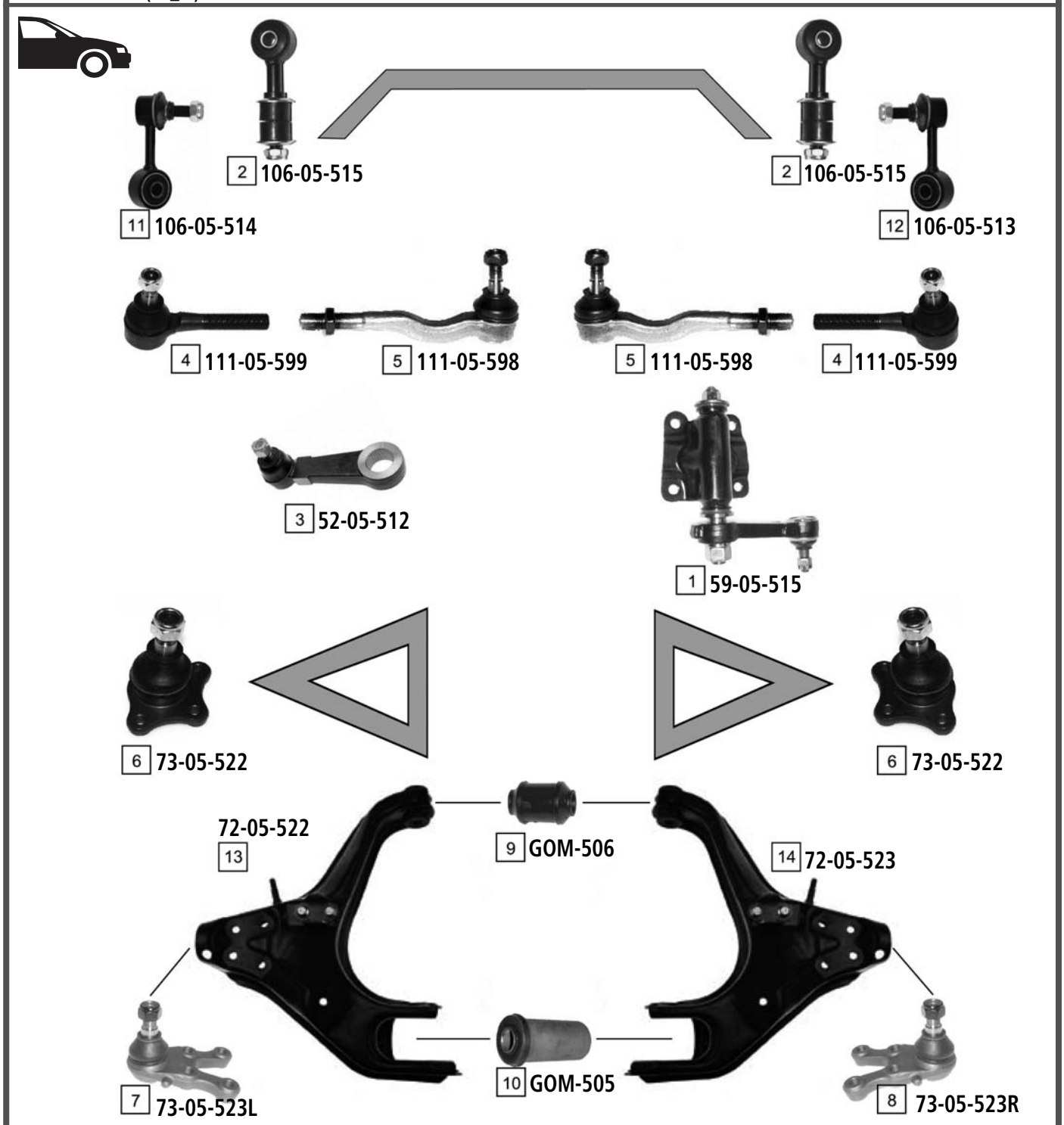

Ref	ASHIKA CODE	Description	OEM	Measures	Ref	ASHIKA CODE	Description	OEM	Measures
1	59-05-515	Pitman Arm	MB831042	-	8	73-05-523R	Ball Joint Lower Right	MB831038	c:19.3
2	106-05-515	Stabiliser Link	MB633926	-	9	GOM-506	Silentblock For Susp.Arm	MB109684	d:40
3	52-05-512	Pitman Arm	MB831040	-	10	GOM-505	Silentblock For Susp.Arm	MB109662	d:40.4
4	111-05-599	Tie Rod End	MB831043	c:13.6 th:M16X1.5L	11	106-05-514	Stabiliser Link Left	MR 132551	L:79
5	111-05-598	Tie Rod End Inner	MB831044	c:13.7 th:M16X1.5R	12	106-05-513	Stabiliser Link Right	MR 132552	L:79
6	73-05-522	Ball Joint Upper	MB-860830	c:16.5	13	72-05-522	Susp. Arm W/O Ball Joint	MB860381	
7	73-05-523L	Ball Joint Lower Left	MB831037	c:19.3	14	72-05-523	Susp. Arm W/O Ball Joint	MB860382	

O.E.M. names and numbers are used for reference purposes only Ashika assumes no responsibility for possible errors

PAJERO III (V6_W / V7_W) **04/2000 - 10/2006**

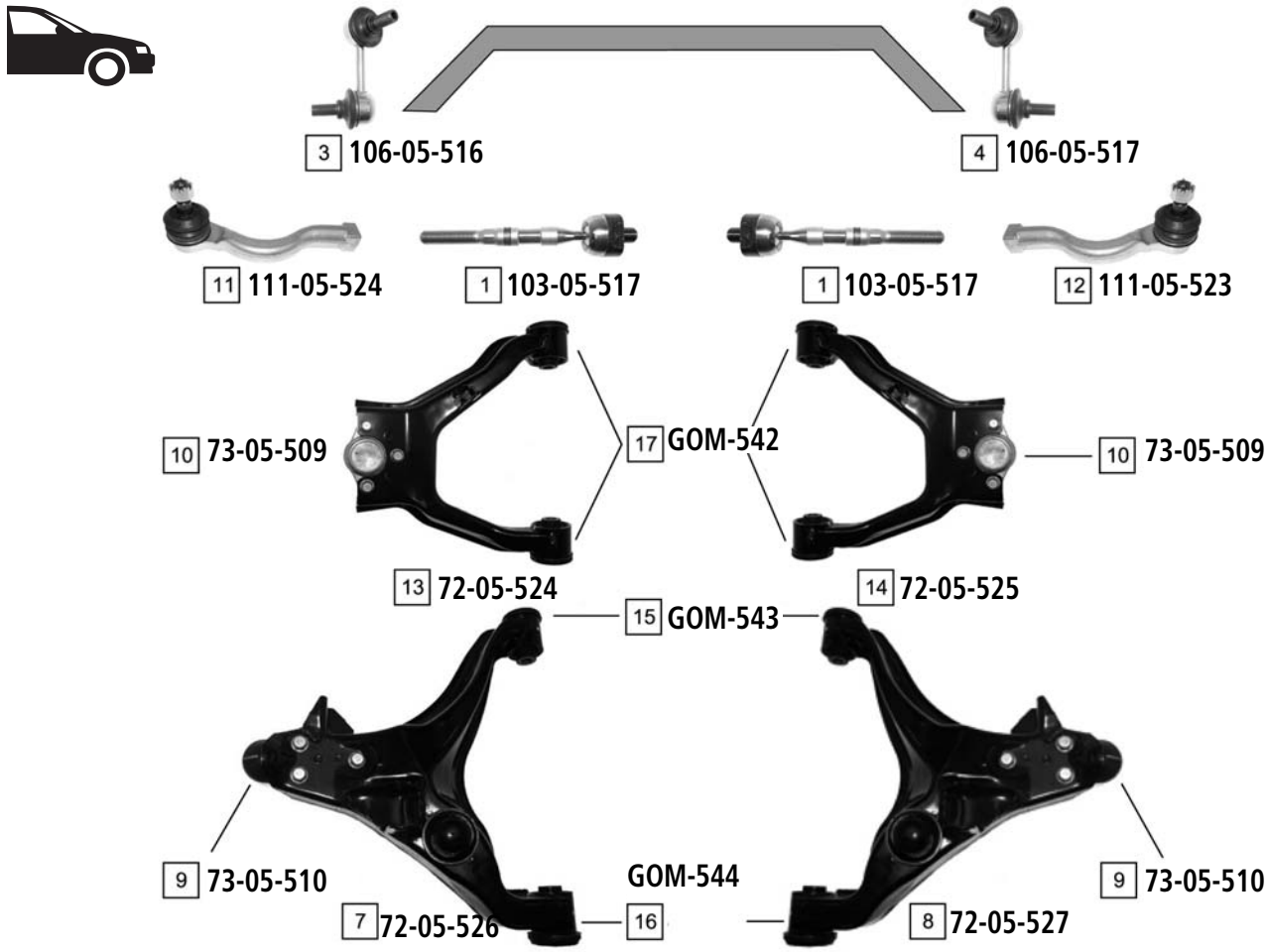

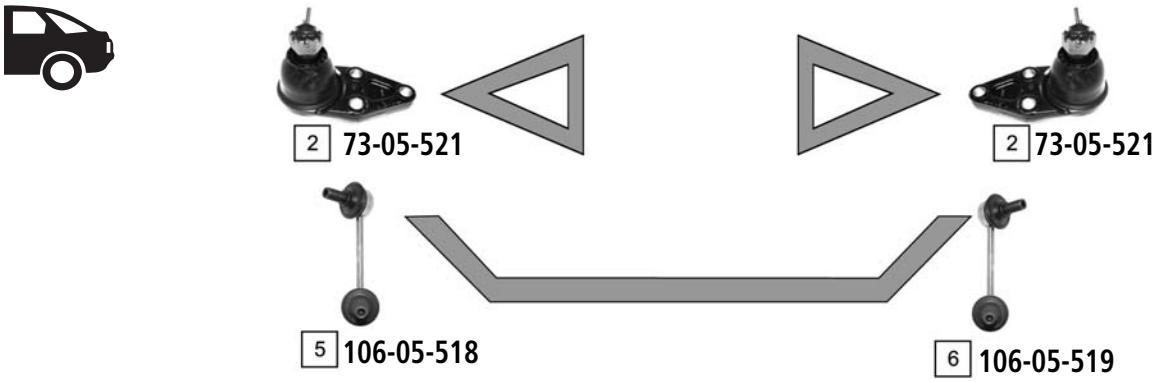

Ref	ASHIKA CODE	Description	OEM	Measures	Ref	ASHIKA CODE	Description	OEM	Measures
1	103-05-517	Axial Joint	MR510267		10	73-05-509	Ball Joint	4010 A015	
2	73-05-521	Ball Joint	MR508130		11	111-05-524	Tie Rod End Left	MR508135	
3	106-05-516	Stabiliser Link Left	MR374521		12	111-05-523	Tie Rod End Right	MR508136	
4	106-05-517	Stabiliser Link Right	MR374522		13	72-05-524	TCA Left	4010 A037	
5	106-05-518	Stabiliser Link Left	MR418052		14	72-05-525	TCA Right	4010 A038	
6	106-05-519	Stabiliser Link Right	MR418053		15	GOM-543	Silentblock For Susp.Arm	Part of 72-05-526 / 72-05-527	
7	72-05-526	TCA Left	MR496795		16	GOM-544	Silentblock For Susp.Arm	Part of 72-05-526 / 72-05-527	
8	72-05-527	TCA Right	MR496796		17	GOM-542	Silentblock For Susp.Arm	Part of 72-05-524 / 72-05-525	
9	73-05-510	Ball Joint	MR496799						

PAJERO PININ (H6_W / H7_W) **10/1999 - 03/2005**

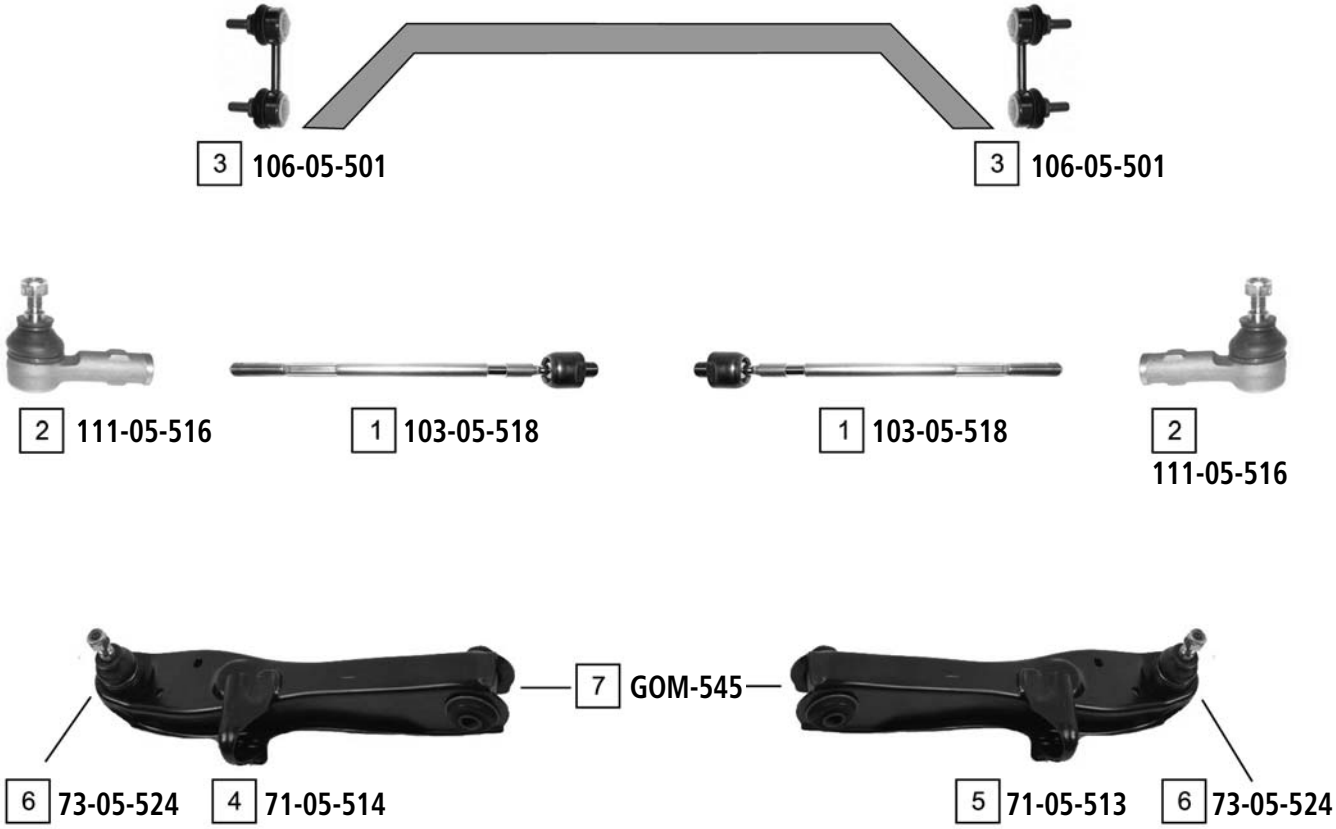

Ref	ASHIKA CODE	Description	OEM	Measures	Ref	ASHIKA CODE	Description	OEM	Measures
1	**103-05-518**	Axial Joint	MR448255		5	**71-05-513**	TCA Right	MR414940	
2	**111-05-516**	Tie Rod End	MB192430	c:13.45 th:FM14X1.5	6	**73-05-524**	Ball Joint	Part of 71-05-514 / 71-05-513	
3	**106-05-501**	Stabiliser Link	4056 A014	L:60	7	**GOM-545**	Silentblock For Susp.Arm	MR319067	
4	**71-05-514**	TCA Left	MR414939						

O.E.M. names and numbers are used for reference purposes only Ashika assumes no responsibility for possible errors

SIGMA (F16A) 12/1990 - 10/1996
SIGMA S.W. (F07W) 01/1993 - 07/1996

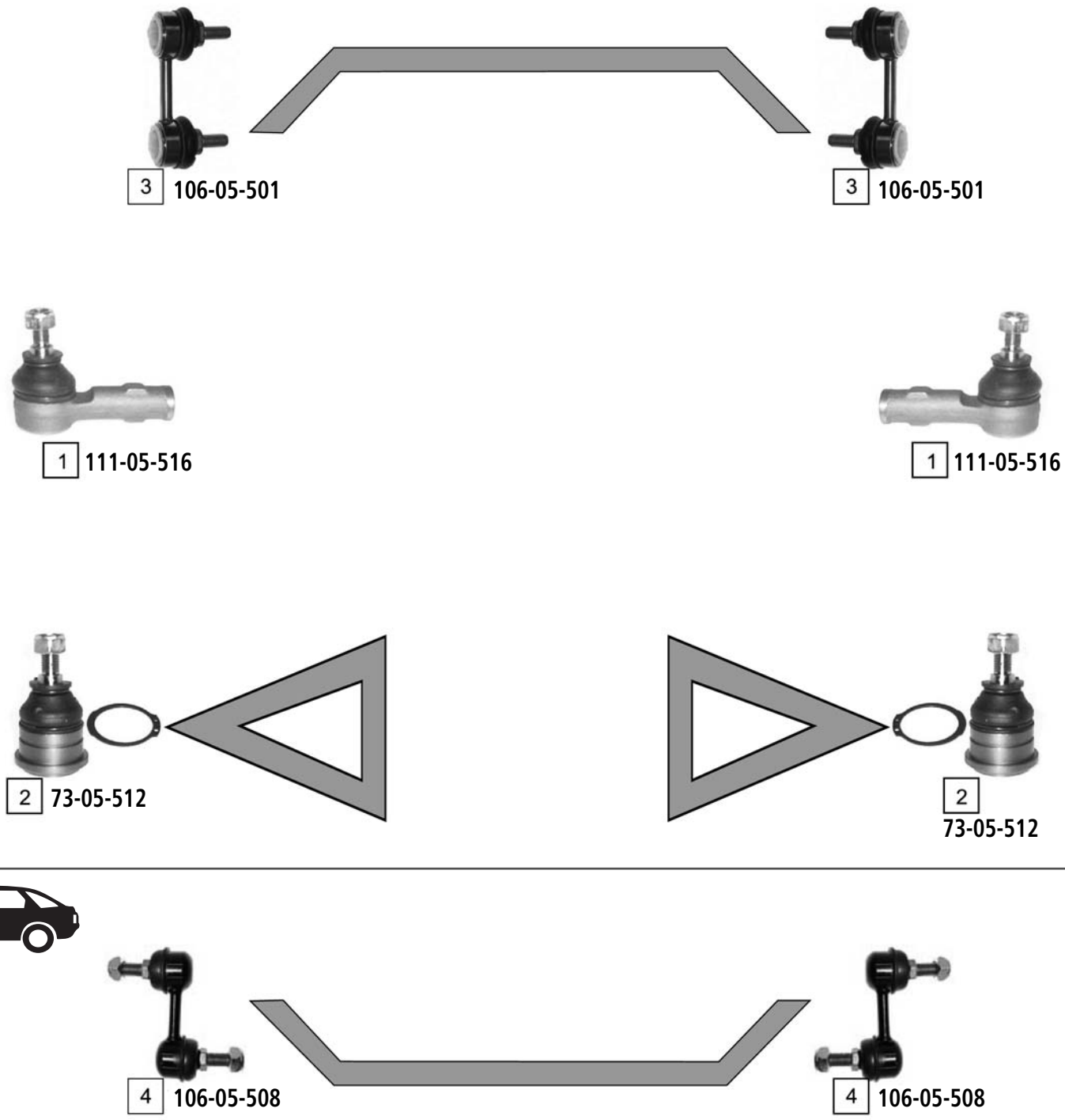

Ref	ASHIKA CODE	Description	OEM	Measures	Ref	ASHIKA CODE	Description	OEM	Measures
1	111-05-516	Tie Rod End	MB192430	c:13.45 th:FM14X1.5	3	106-05-501	Stabiliser Link	4056 A014	L:60
2	73-05-512	Ball Joint Lower	MB-518961	c:15	4	106-05-508	Stabiliser Link	MR131732	L:60

SPACE RUNNER (N1 W, N2 W) **10/1991 - 08/1999**

1 **111-05-516**

1 **111-05-516**

2 **73-05-512**

2 **73-05-512**

Ref	ASHIKA CODE	Description	OEM	Measures	Ref	ASHIKA CODE	Description	OEM	Measures
1	**111-05-516**	Tie Rod End	MB192430	c:13.45 th:FM14X1.5	2	**73-05-512**	Ball Joint	MB518961	

O.E.M. names and numbers are used for reference purposes only Ashika assumes no responsibility for possible errors

SPACE STAR (DGO) **08/1998 - 03/2006**

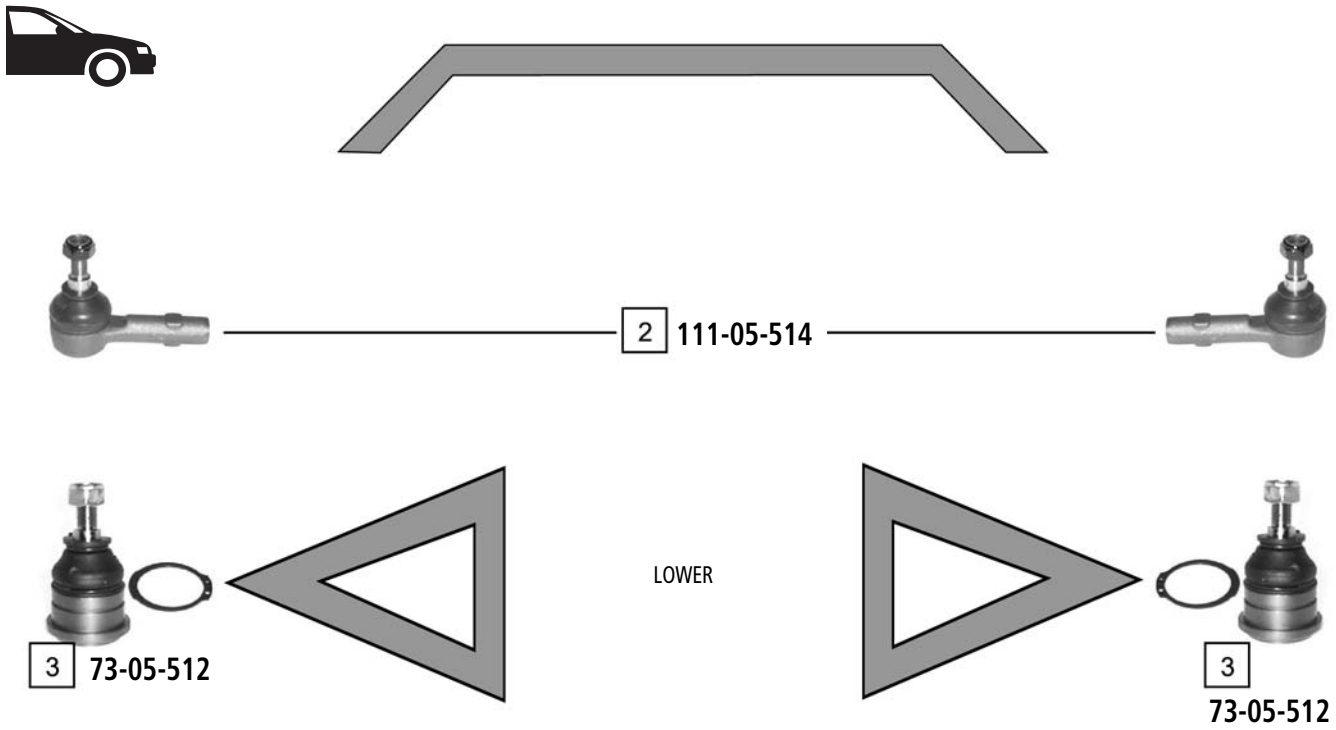

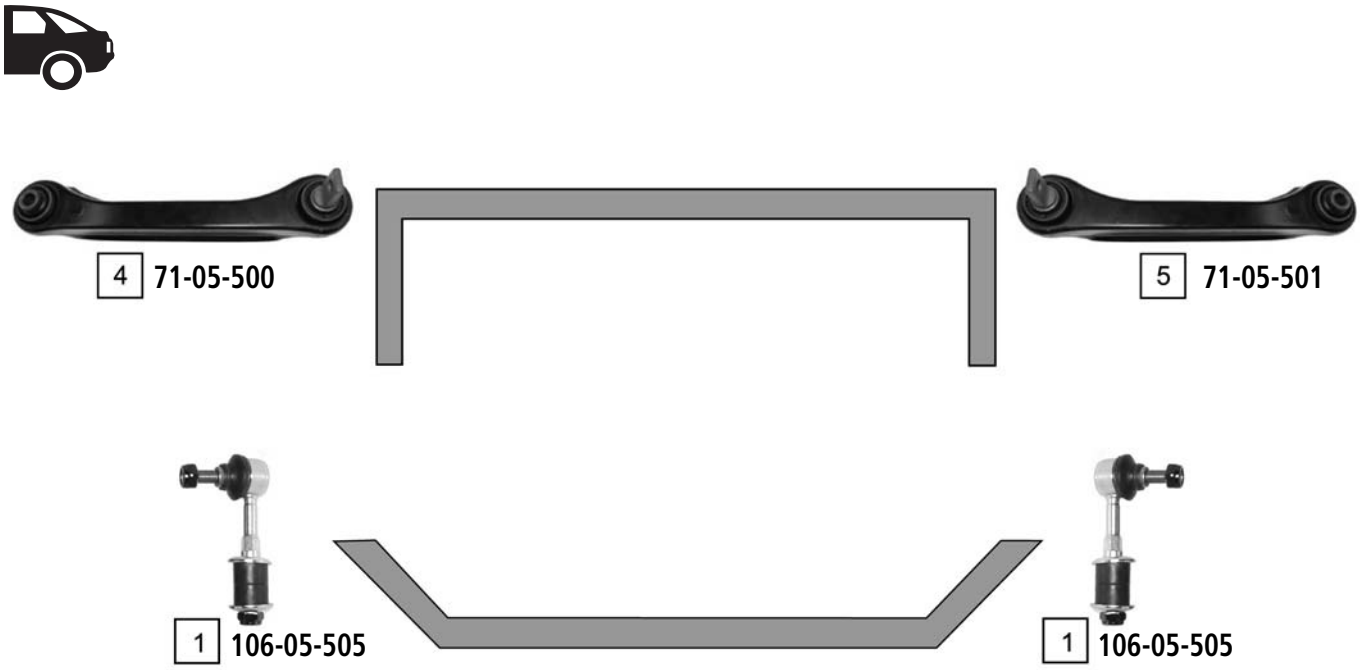

Ref	ASHIKA CODE	Description	OEM	Measures	Ref	ASHIKA CODE	Description	OEM	Measures
1	**106-05-505**	Stabiliser Link	MR272118		4	**71-05-500**	TCA Left	MR130479	
2	**111-05-514**	Tie Rod End	MB527169	c:13.4 th:FM12X1.25	5	**71-05-501**	TCA Right	MR130480	
3	**73-05-512**	Ball Joint Lower	Part of MB518961	c:15					

SPACE WAGON (DO_V/W) **10/1983-04/1991**

PS EXC 4X4

1 111-05-516 3 103-05-506 3 103-05-506 1 111-05-516

PS 4X4

1 111-05-516 2 103-05-505 2 103-05-505 1 111-05-516

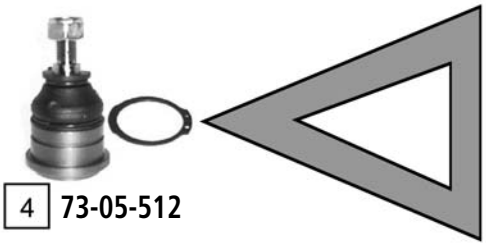

4 73-05-512

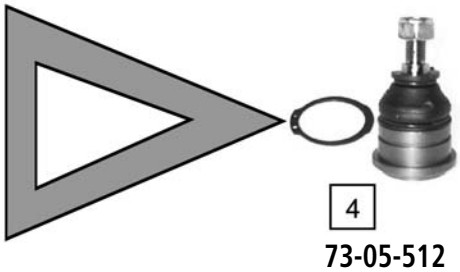

4 73-05-512

Ref	ASHIKA CODE	Description	OEM	Measures	Ref	ASHIKA CODE	Description	OEM	Measures
1	**111-05-516**	Tie Rod End	MB192430	c:13.45 th:FM14X1.5	3	**103-05-506**	Axial Joint	MB243329	
2	**103-05-505**	Axial Joint	MB 266152	th:MM16X1.5R L:296	4	**73-05-512**	Ball Joint Lower	MB518961	

O.E.M. names and numbers are used for reference purposes only Ashika assumes no responsibility for possible errors

SPACE WAGON (N3_W, N4_W) 05/1991 - 11/1998

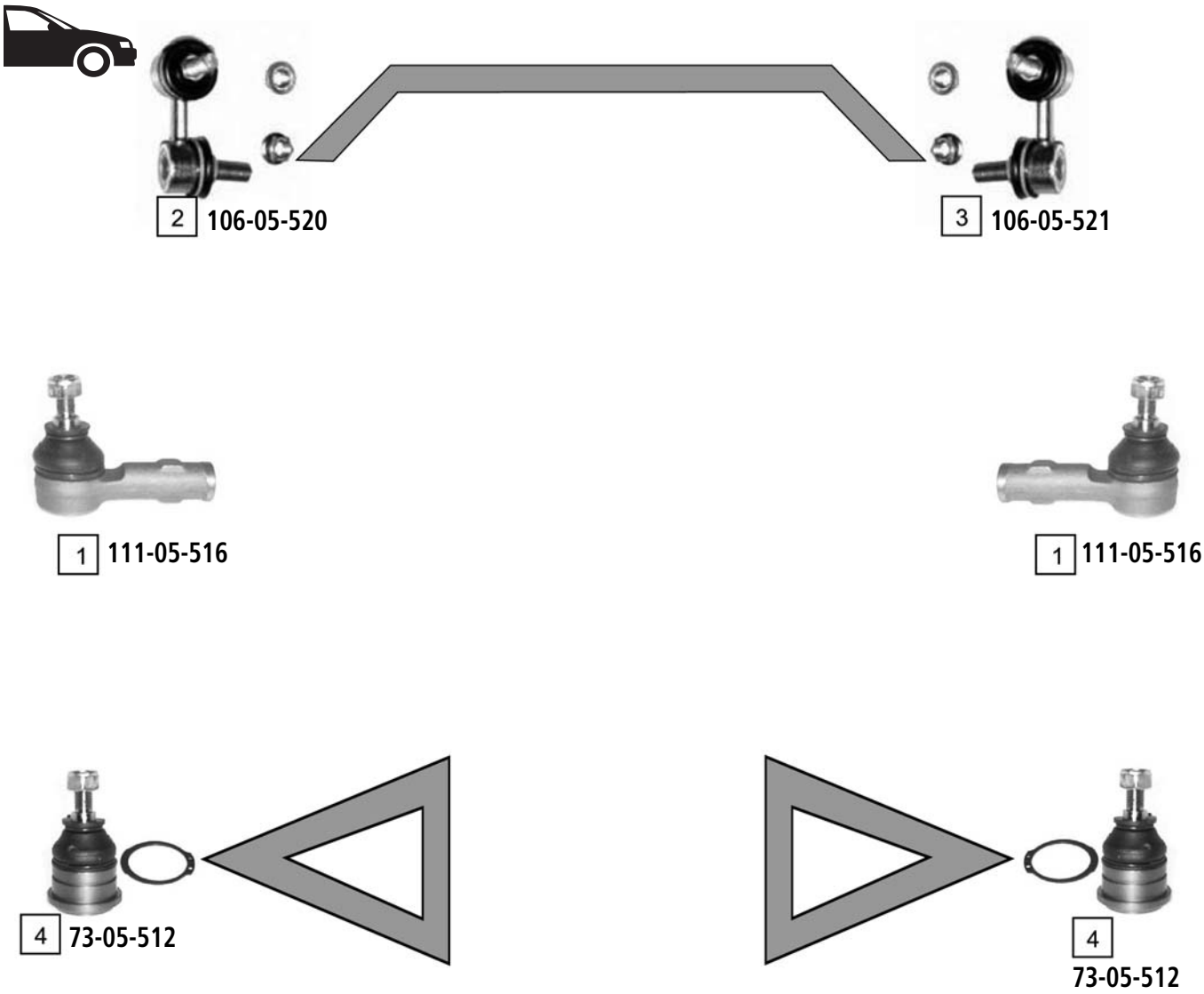

Ref	ASHIKA CODE	Description	OEM	Measures	Ref	ASHIKA CODE	Description	OEM	Measures
1	111-05-516	Tie Rod End	MB192430	c:13.45 th:FM14X1.5	3	106-05-521	Stabiliser Link Right	MB808076	L:51.5
2	106-05-520	Stabiliser Link Left	MB672370	L:51.5	4	73-05-512	Ball Joint Lower	Part of MB518961	c:15

STARION (A18_A) **01/1982 - 08/1990**

1 **111-05-501**
-> 05/1987

2 **111-05-505**
ALL

3 **111-05-508**
ALL

1 **111-05-501**
-> 05/1987

4 **53-05-510**

4 **53-05-510**

Ref	ASHIKA CODE	Description	OEM	Measures	Ref	ASHIKA CODE	Description	OEM	Measures
1	**111-05-501**	Tie Rod End	MA159984	c:12.5 th:MM14X1.5L	3	**111-05-508**	Tie Rod End Inner Right	MB109858	c:12.5 th:FM14X1.5L
2	**111-05-505**	Tie Rod End Inner Left	MB076003	c:12.1 th:MM14X1.5R	4	**53-05-510**	Ball Joint	MB-185329	

O.E.M. names and numbers are used for reference purposes only Ashika assumes no responsibility for possible errors

TREDIA (A21_) 06/1982 - 03/1988
CORDIA (A21_A) 10/1982 - 12/1986

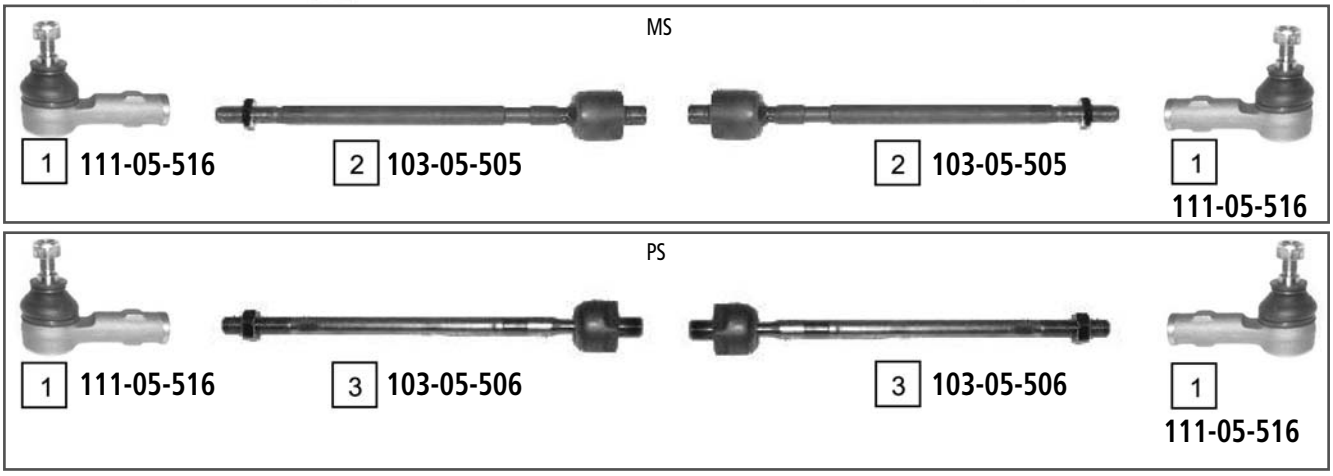

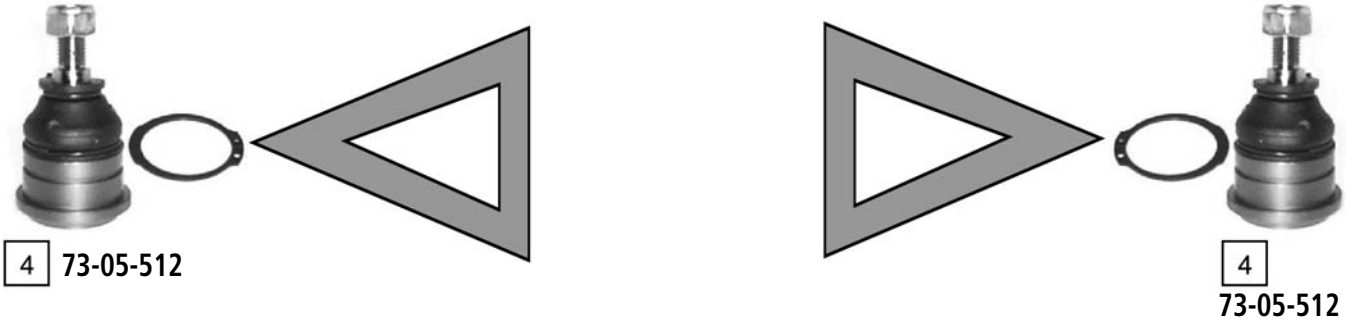

Ref	ASHIKA CODE	Description	OEM	Measures	Ref	ASHIKA CODE	Description	OEM	Measures
1	**111-05-516**	Tie Rod End	MB192430	c:13.45 th:FM14X1.5	3	**103-05-506**	Axial Joint	MB243329	th:MM16X1.5R L:295
2	**103-05-505**	Axial Joint	MB 266152	th:MM16X1.5R L:296	4	**73-05-512**	Ball Joint Lower	MB-518961	c:15

100 NX (B13) **08/1990 - 06/1995**

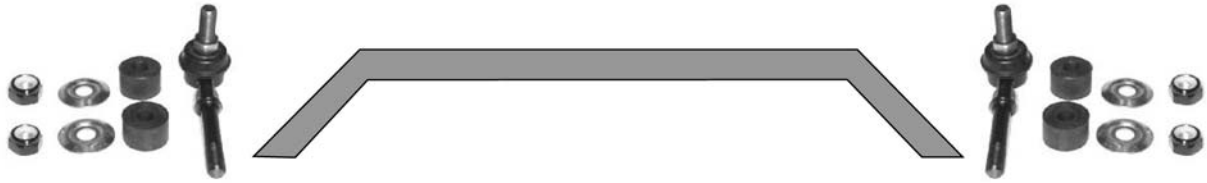

1 **106-01-101**

1 **106-01-101**

EXC 2.0

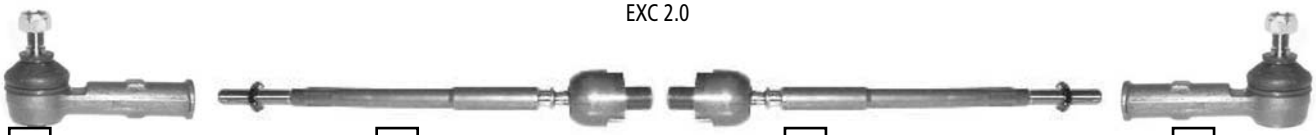

2 **111-01-109**

3 **76-01-190**

3 **76-01-190**

2 **111-01-109**

5 **107-01-190**

4 **GOM-139**

5 **107-01-190**

Ref	ASHIKA CODE	Description	OEM	Measures	Ref	ASHIKA CODE	Description	OEM	Measures
1	**106-01-101**	Stabiliser Link	54618 50Y00	L:85.5	4	**GOM-139**	Silentblock For Susp.Arm	54570-69Y10	
2	**111-01-109**	Tie Rod End	48520-01E00	c:13 th:FM12X1.25R	5	**107-01-190**	Ball Joint		c:14.7
3	**76-01-190**	Axial Joint	48521-50400	th:MM16X1R L:274.5					

O.E.M. names and numbers are used for reference purposes only Ashika assumes no responsibility for possible errors

ALMERA I (N15) **07/1995 - 07/2000**

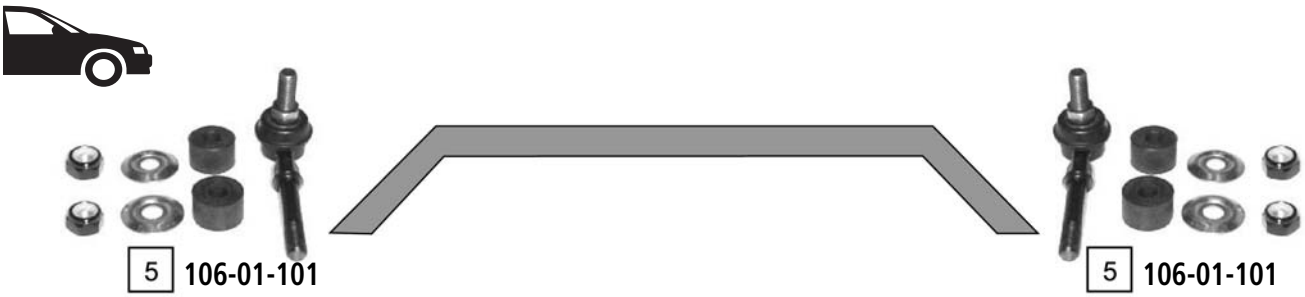

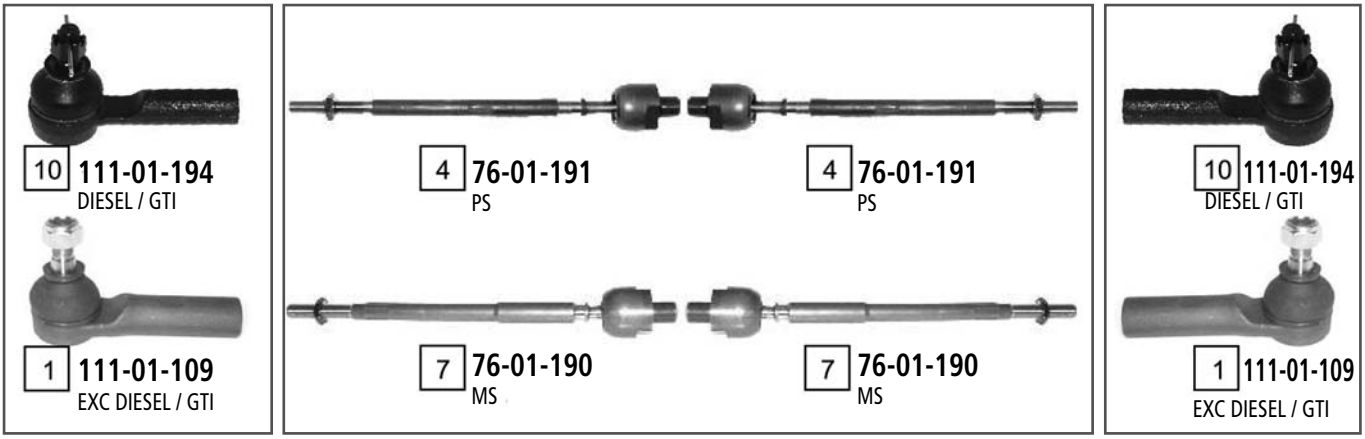

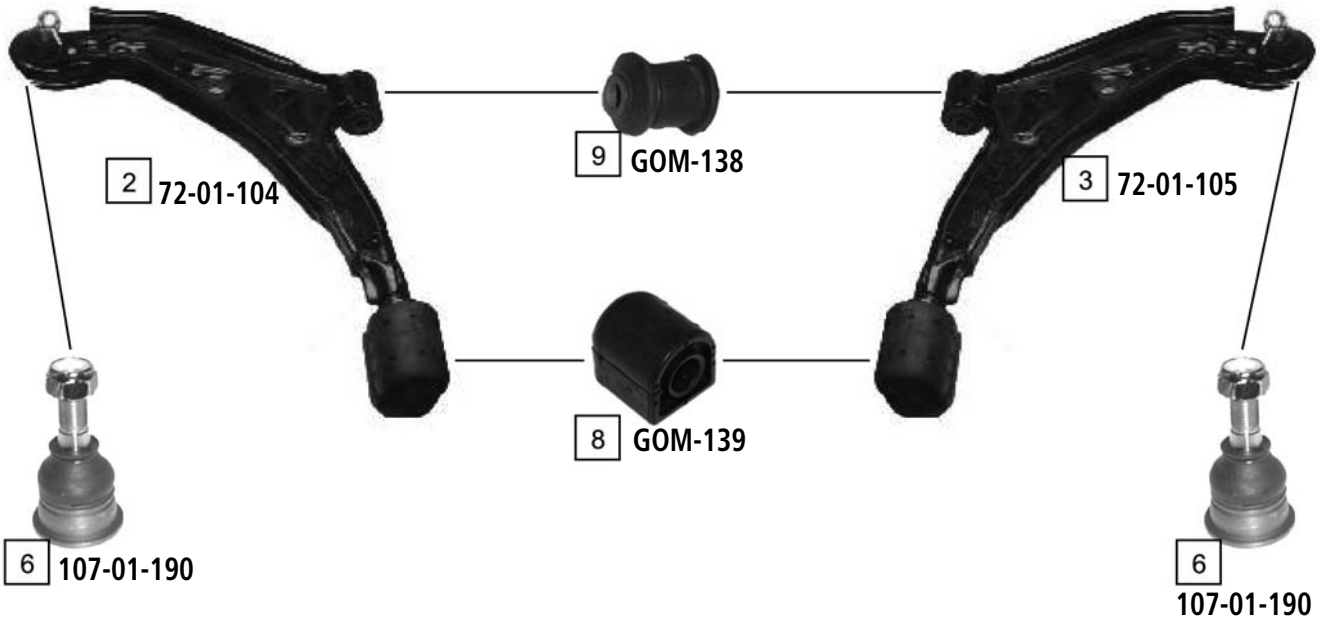

Ref	ASHIKA CODE	Description	OEM	Measures	Ref	ASHIKA CODE	Description	OEM	Measures
1	**111-01-109**	Tie Rod End	48520-0M025	c:12.9 th:FM12X1.5R	6	**107-01-190**	Ball Joint	4016152910	c:14.7
2	**72-01-104**	TCA Left	54501-0M010	c:14.9	7	**76-01-190**	Axial Joint	48521-50400	th:MM16X1R L.274.5
3	**72-01-105**	TCA Right	54500-0M010	c:14.9	8	**GOM-139**	Silentblock For Susp.Arm	54570-69Y10	
4	**76-01-191**	Axial Joint	48521-1M210	th:MM16X1R L:275	9	**GOM-138**	Silentblock For Susp.Arm	54560-50A00	d:36.2
5	**106-01-101**	Stabiliser Link	54618 50Y00	L:85.5	10	**111-01-194**	Tie Rod End	48520-OM085	c:12.85 th:FM14X1.5

ALMERA II (N16) **08/2000-03/2007**

UK PRODUCTION

JAPAN PRODUCTION

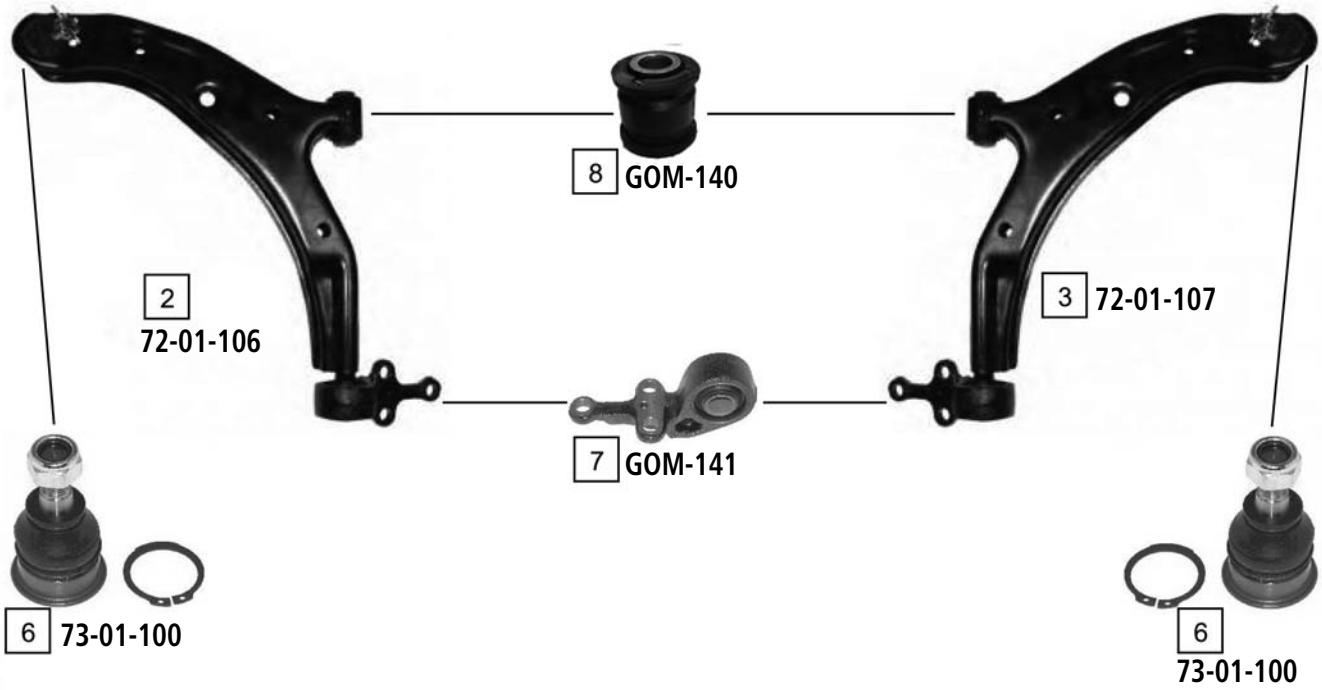

Ref	ASHIKA CODE	Description	OEM	Measures	Ref	ASHIKA CODE	Description	OEM	Measures
1	**111-01-100**	Tie Rod End	48520-BM425	c:12.7 th:FM12X1.25	6	**73-01-100**	Ball Joint	-	c:14.7
2	**72-01-106**	TCA Left	54501-BM400	c:15	7	**GOM-141**	Silentblock For Susp.Arm	Part of 72-01-106 / 72-01-107	
3	**72-01-107**	TCA Right	54500-BM300	c:15	8	**GOM-140**	Silentblock For Susp.Arm	Part of 72-01-106 / 72-01-107	d:32.2
4	**103-01-108**	Axial Joint	48521 4M500	th:MM16X1R L:284	9	**103-01-100**	Axial Joint	48520-0C025	th:MM16X1R L:275
5	**106-01-100**	Stabiliser Link	54618-4M400		10	**111-01-101**	Tie Rod End	48520-15U25	c:12.8 th:FM14X1.5R

O.E.M. names and numbers are used for reference purposes only Ashika assumes no responsibility for possible errors

ALMERA TINO (V10) **08/2000 - 12/2006**

Ref	ASHIKA CODE	Description	OEM	Measures	Ref	ASHIKA CODE	Description	OEM	Measures
1	**103-01-111**	Axial Joint	48521 4U000	th:MM16X1R L:310	5	**106-01-103**	Stabiliser Link Right	54618-4U000	L:65
2	**72-01-108**	TCA Left Wbj	54501-5U300		6	**73-01-101**	Ball Joint	40160-2Y000	c:15
3	**72-01-109**	TCA Right Wbj	54500 5U300		7	**111-01-101**	Tie Rod End	48520-15U25	c:12.8 th:FM14X1.5R
4	**106-01-104**	Stabiliser Link Left	54668-4U000	L:65					

BLUEBIRD (910) **01/1980 - 12/1983**

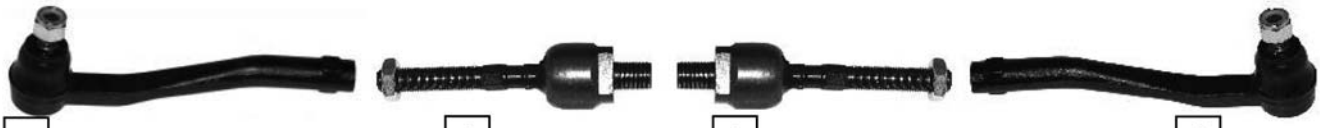

2 **111-01-122L**

3 **103-01-103**

3 **103-01-103**

4 **111-01-122R**

1 **53-01-126**

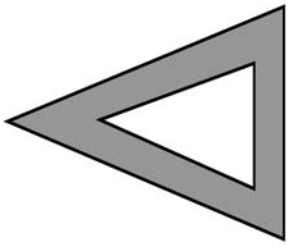

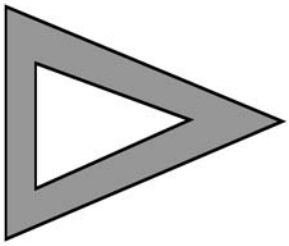

1 **53-01-126**

5 **71-01-190**

6 **26-01-195**

Ref	ASHIKA CODE	Description	OEM	Measures	Ref	ASHIKA CODE	Description	OEM	Measures
1	**53-01-126**	Ball Joint Lower	40160-W1000	c:16.2	4	**111-01-122R**	Tie Rod End Right	48520-W1025	c:13.4 th:FM14X1.5R
2	**111-01-122L**	Tie Rod End	48640-W1025	c:13.4 th:FM14X1.5R	5	**71-01-190**	TCA Left		
3	**103-01-103**	Axial Joint	48521-01F00		6	**26-01-195**	TCA Right		

O.E.M. names and numbers are used for reference purposes only Ashika assumes no responsibility for possible errors

BLUEBIRD (U11,WU11,T72) **11/1983 - 05/1990**

2 **106-01-101**
01/1986 ->

2 **106-01-101**
01/1986 ->

4 **111-01-109**

3 **103-01-101**

3 **103-01-101**

4 **111-01-109**

1 **73-01-124**

1 **73-01-124**

Ref	ASHIKA CODE	Description	OEM	Measures	Ref	ASHIKA CODE	Description	OEM	Measures
1	**73-01-124**	Ball Joint Lower	40160 01E00	c: 14.9	3	**103-01-101**	Axial Joint	48521-35F00	th:MM16X1R L:270
2	**106-01-101**	Stabiliser Link	54618 50Y00	L:85.5	4	**111-01-109**	Tie Rod End	48520-01E25	c:13 th:FM12X1.25R

CHERRY (F10,N10) **02/1975 - 05/1982**

2 **111-01-118**

1 **103-01-104**

1 **103-01-104**

2 **111-01-118**

F10

3 **53-01-115**

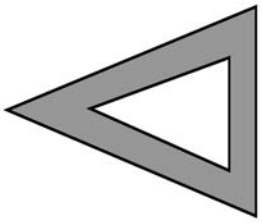

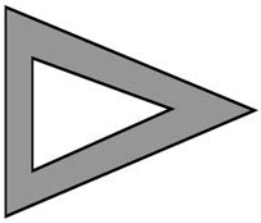

3 **53-01-115**

N10

4 **53-01-118**

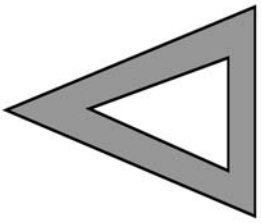

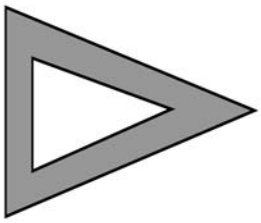

4 **53-01-118**

Ref	ASHIKA CODE	Description	OEM	Measures	Ref	ASHIKA CODE	Description	OEM	Measures
1	**103-01-104**	Axial Joint	-	-	3	**53-01-115**	Ball Joint Lower	40160-M3025	c:13.2
2	**111-01-118**	Tie Rod End	48520-M0225	c:13.7 th:FM12X1.25	4	**53-01-118**	Ball Joint Lower	40160-M7025	c:13

O.E.M. names and numbers are used for reference purposes only Ashika assumes no responsibility for possible errors

CHERRY (N12) **06/1982 - 07/1987**

1 **111-01-109** 2 **103-01-101** 2 **103-01-101** 1 **111-01-109**

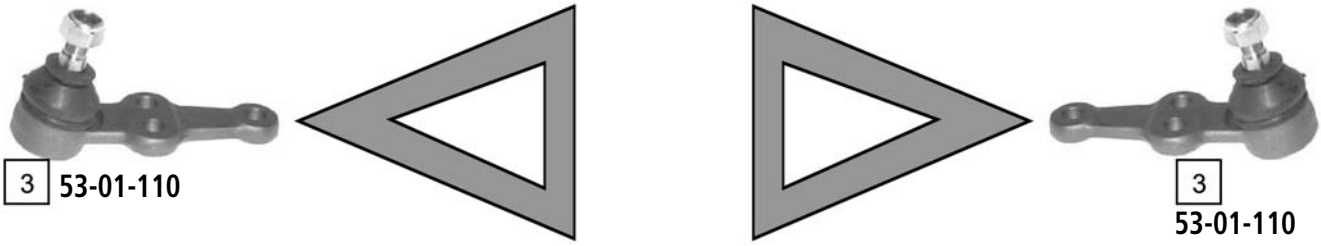

3 **53-01-110** 3 **53-01-110**

Ref	ASHIKA CODE	Description	OEM	Measures	Ref	ASHIKA CODE	Description	OEM	Measures
1	**111-01-109**	Tie Rod End	48520-D010	c:13 th:FM12X1.25R	3	**53-01-110**	Ball Joint Lower	40160-01A25	c:13
2	**103-01-101**	Axial Joint	48521-35F00	th:MM16X1R L:270					

INTERSTAR (X70) **07/2002 ->**

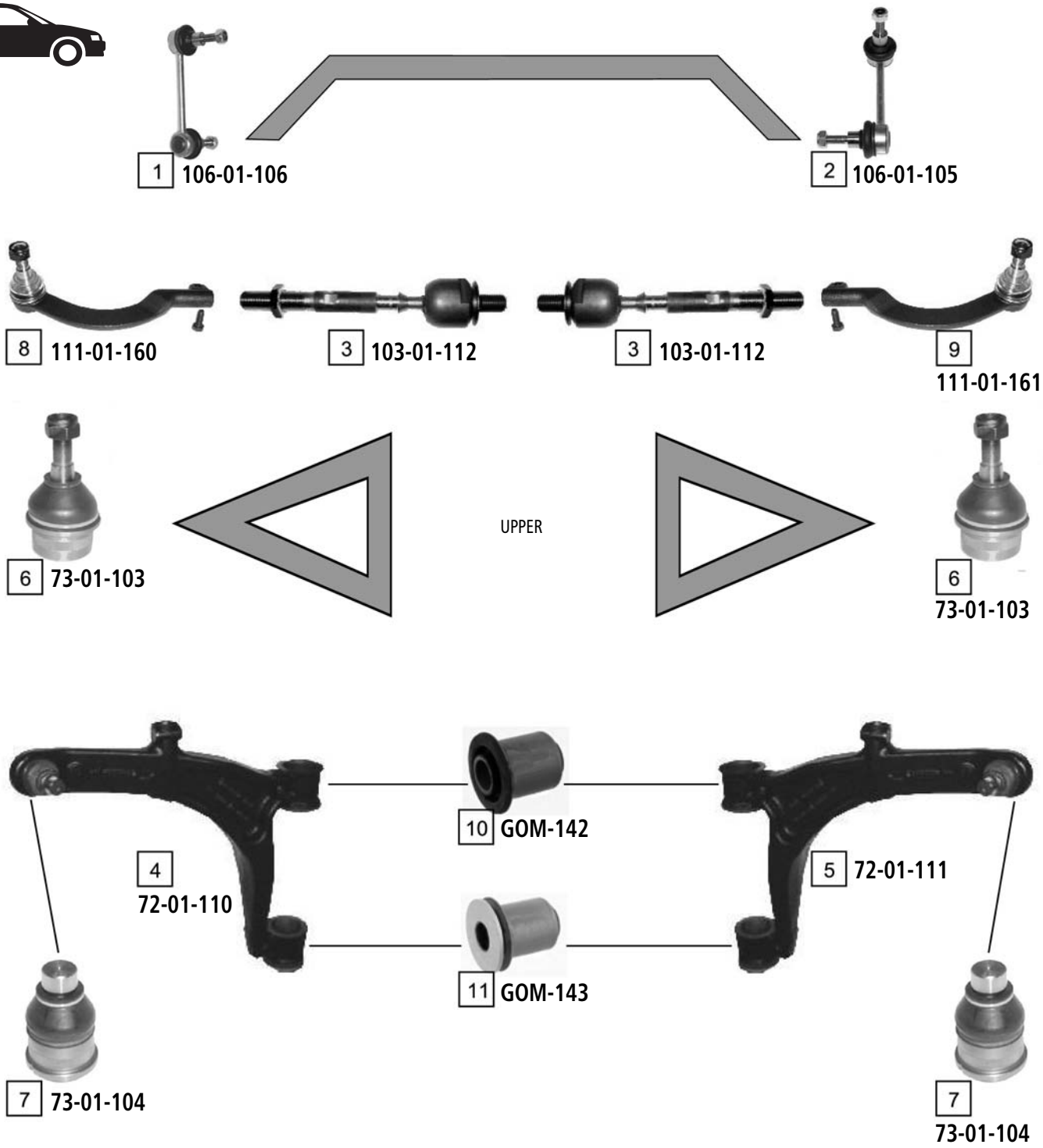

Ref	ASHIKA CODE	Description	OEM	Measures	Ref	ASHIKA CODE	Description	OEM	Measures
1	**106-01-106**	Stabiliser Link Left	54616-00QAB	L:127	7	**73-01-104**	Ball Joint Lower	54500-00QAC	c:22
2	**106-01-105**	Stabiliser Link Right	54618-00QAA	L:127	8	**111-01-160**	Tie Rod End Left	48520-00QAH	c:16.4 th:FM16X1.5R
3	**103-01-112**	Axial Joint	48521-00QAF	th:MM14X1.5R L:175	9	**111-01-161**	Tie Rod End Right	48520-00QAJ	c:16.4 th:FM16X1.5R
4	**72-01-110**	TCA Left	54501-00QAC	c:22	10	**GOM-142**	Silentblock For Susp.Arm	54570 00QAA	d:55.2
5	**72-01-111**	TCA Right	54500-00QAC	c:22	11	**GOM-143**	Silentblock For Susp.Arm	54423 00QAA	d:55.2
6	**73-01-103**	Ball Joint Upper	45 00 254	c:16					

O.E.M. names and numbers are used for reference purposes only Ashika assumes no responsibility for possible errors

KUBISTAR (X76) **07/2003 ->**

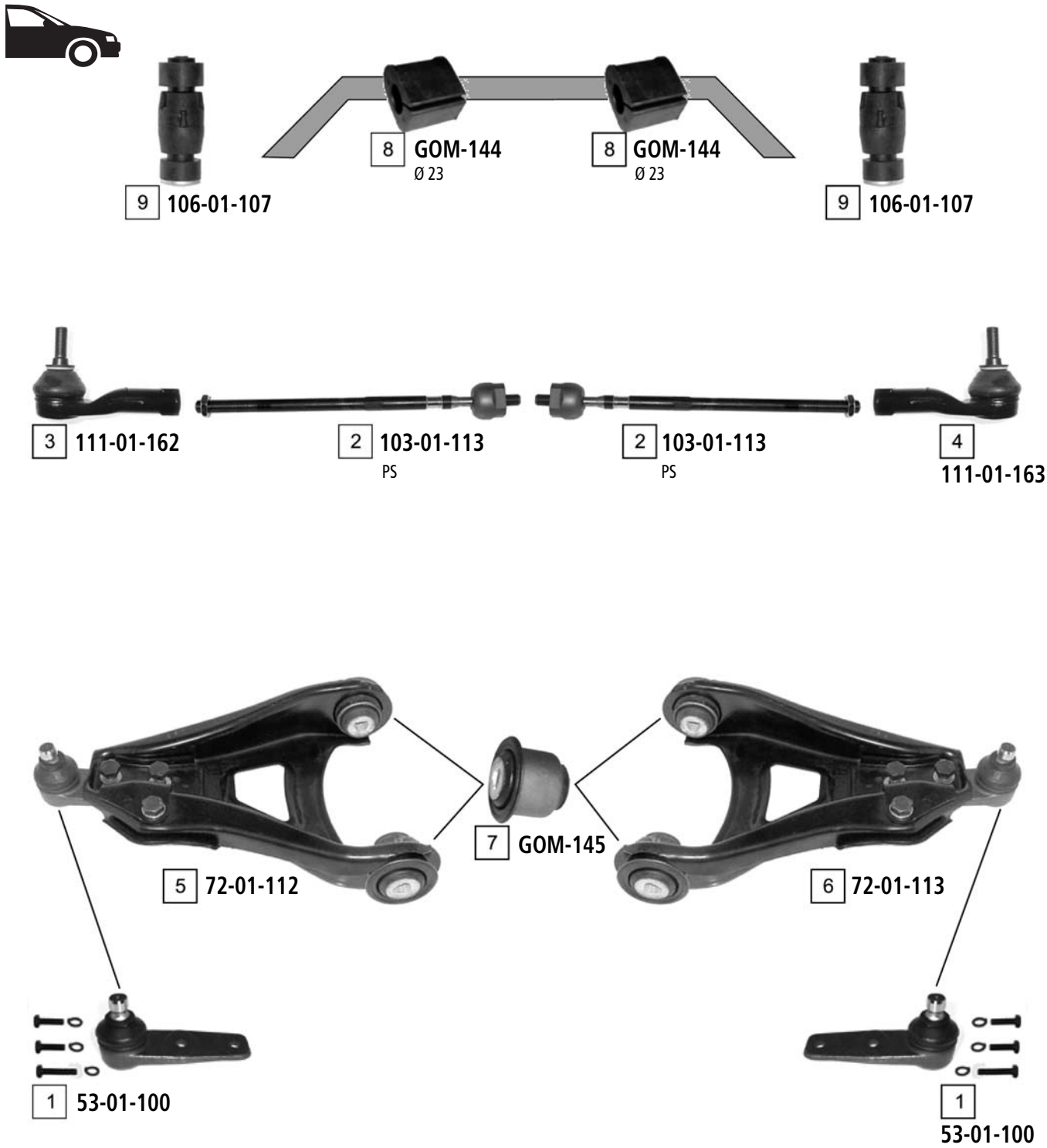

Ref	ASHIKA CODE	Description	OEM	Measures	Ref	ASHIKA CODE	Description	OEM	Measures
1	**53-01-100**	Ball Joint Lower	77 01 472 038	c:16	6	**72-01-113**	TCA Left Right	54500 00QAH	c:16
2	**103-01-113**	Axial Joint	48521 00QAG	th:MM12X1R L:303	7	**GOM-145**	Silentblock For Susp.Arm	54560 00QAB	d:45.4
3	**111-01-162**	Tie Rod End	48520 00QAN		8	**GOM-144**	Stabiliser Mounting	54613 00QAD	d:21
4	**111-01-163**	Tie Rod End	48520 00QAP		9	**106-01-107**	Stabiliser Mounting	54616 00QAA	
5	**72-01-112**	TCA Left	54501 00QAH	c:16					

LAUREL (C31, C32) **01/1981 - 06/1990**

-> 10/1984

1 **111-01-130**

5 **111-01-117**

5 **111-01-117**

1 **111-01-130**

11/1984 ->

3 **111-01-148**

2 **103-01-103**

2 **103-01-103**

3 **111-01-148**

4 **73-01-195**

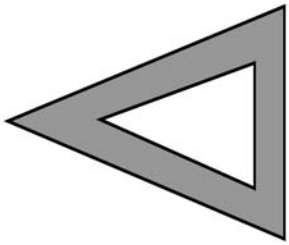

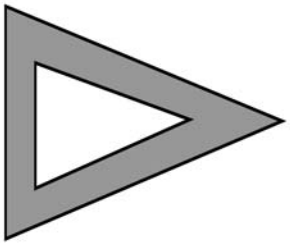

4 **73-01-195**

Ref	ASHIKA CODE	Description	OEM	Measures	Ref	ASHIKA CODE	Description	OEM	Measures
1	**111-01-130**	Tie Rod End	48520-01L25	c:13.5 th:MM14X1.5L	4	**73-01-195**	Ball Joint Lower	40160-41L00	c:16.2
2	**103-01-103**	Axial Joint	48521-01F00		5	**111-01-117**	Tie Rod End		
3	**111-01-148**	Tie Rod End	48520-41L00	c:13.6 th:FM14X1.5R					

O.E.M. names and numbers are used for reference purposes only Ashika assumes no responsibility for possible errors

MAXIMA (J30) **10/1988 - 09/1994**

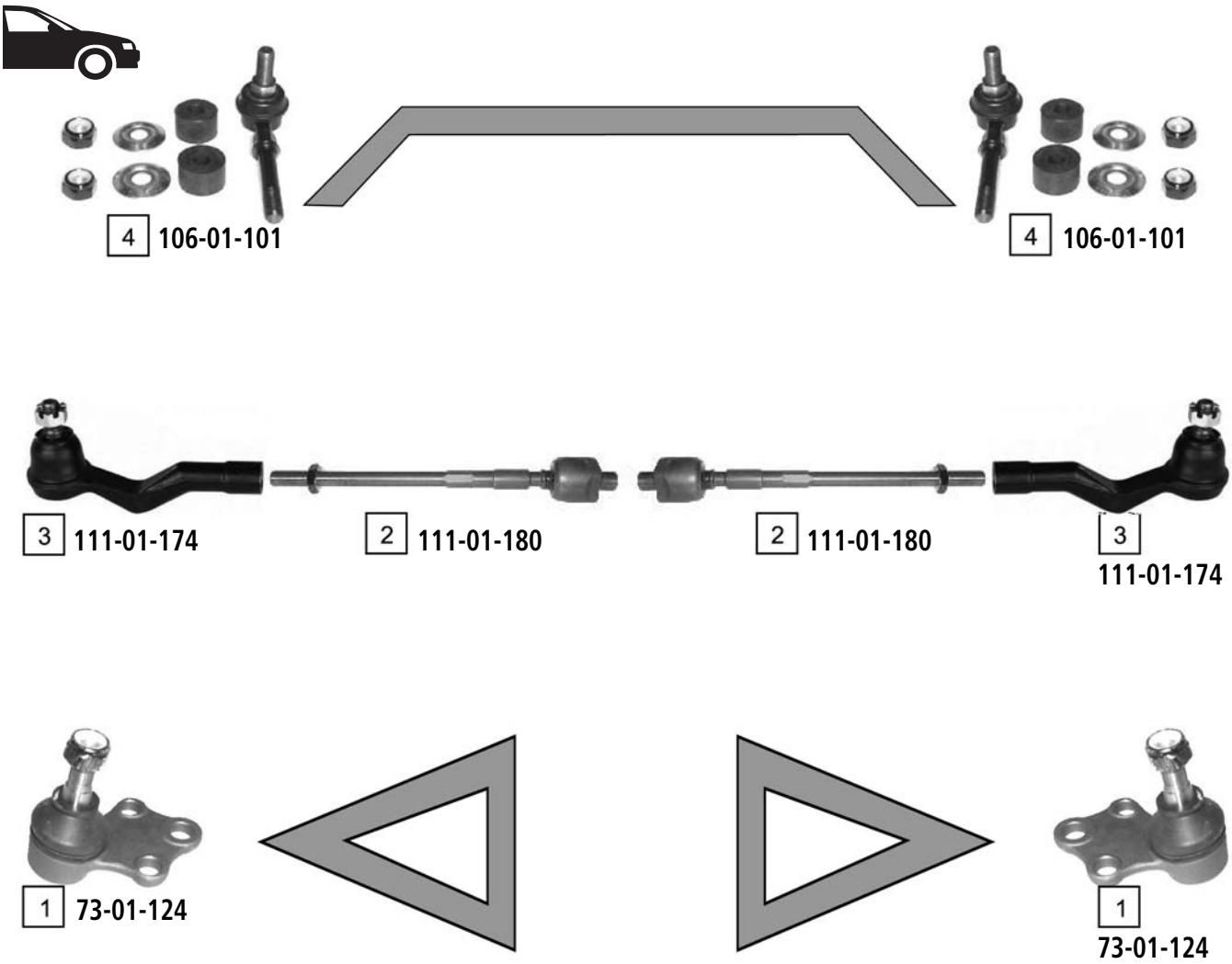

Ref	ASHIKA CODE	Description	OEM	Measures	Ref	ASHIKA CODE	Description	OEM	Measures
1	**73-01-124**	Ball Joint Lower	40160 01E00	c:14.9	3	**111-01-174**	Tie Rod End	48520-88E25	c:11 th:FM14X1.5R
2	**111-01-180**	Axial Joint	48521-72E06	th:MM16X1R L:260	4	**106-01-101**	Stabiliser Link	54618 50Y00	L:85.5

MAXIMA QX (A32) **10/1994 - 08/2000**

5 106-01-108

5 106-01-108

1 111-01-194

4 103-01-114

4 103-01-114

1 111-01-194

2 72-01-114

3 72-01-115

Ref	ASHIKA CODE	Description	OEM	Measures	Ref	ASHIKA CODE	Description	OEM	Measures
1	**111-01-194**	Tie Rod End	48520-0M085	c:12.85 th:FM14X1.5	4	**103-01-114**	Axial Joint	48521-40U25	th:MM16X1R L:312
2	**72-01-114**	TCA Left	54501-41001	c:17	5	**106-01-108**	Stabiliser Link	54618-0E000	L:98
3	**72-01-115**	TCA Right	54500-41000	c:17					

O.E.M. names and numbers are used for reference purposes only Ashika assumes no responsibility for possible errors

MICRA (K10) **12/1982 - 11/1992**

1 111-01-190

-> 02/1985

2 103-01-185 2 103-01-185

03/1985 ->

3 103-01-101 3 103-01-101

1 111-01-190

4 GOM-146

5 111-01-184

6 111-01-177

7 GOM-147

8 106-01-198 8 106-01-198

Ref	ASHIKA CODE	Description	OEM	Measures	Ref	ASHIKA CODE	Description	OEM	Measures
1	**111-01-190**	Tie Rod End	48520-01B25	c:11 th:FM12X1.25R	5	**111-01-184**	TCA Left	54501 21B00	c:11.7
2	**103-01-185**	Axial Joint	48521-17B00	th:FM18X1R L:270	6	**111-01-177**	TCA Right	54500 21B00	c:11.7
3	**103-01-101**	Axial Joint	48521-35F00	th:MM16X1R L:270	7	**GOM-147**	Silentblock For Susp.Arm	54476 01B00	
4	**GOM-146**	Silentblock For Susp.Arm	54535 01B00	d:27.2	8	**106-01-198**	Stabiliser Link	45261-4F702	L:90

MICRA (K11) 03/1993 - 08/2002

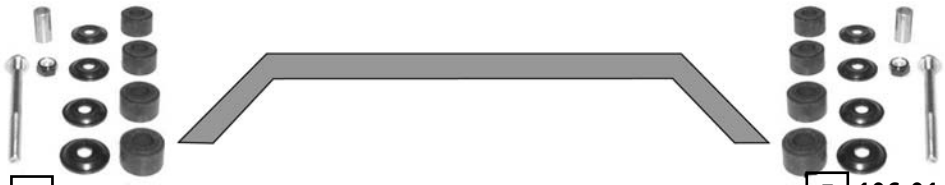

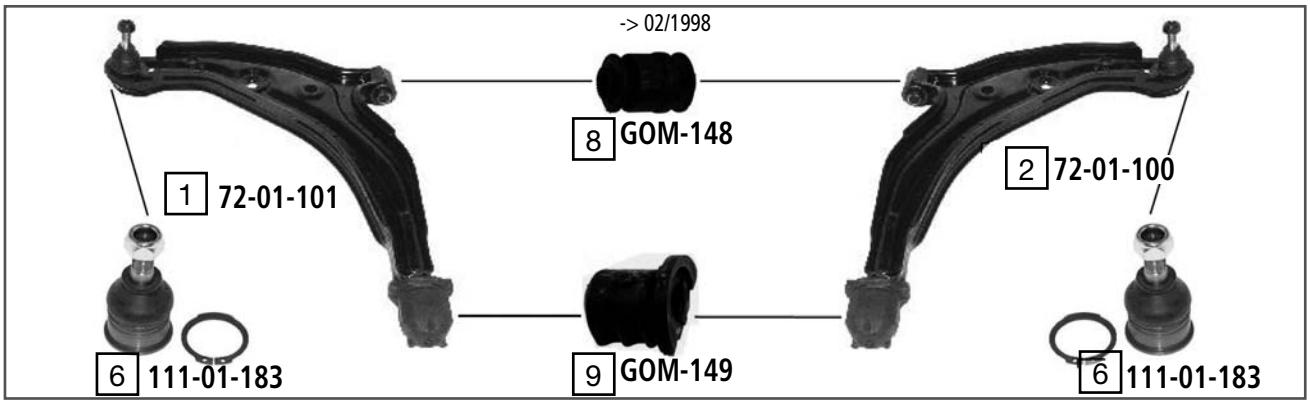

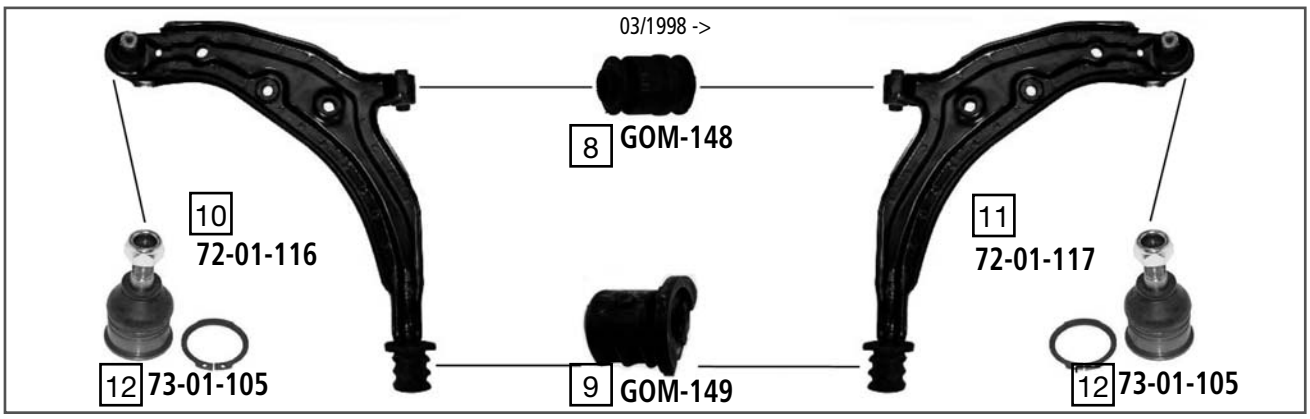

Ref	ASHIKA CODE	Description	OEM	Measures	Ref	ASHIKA CODE	Description	OEM	Measures
1	**72-01-101**	TCA Left	54501 4F102	c:12.4	7	**103-01-101**	Axial Joint	48521-35F00	th:MM16X1R L:270
2	**72-01-100**	TCA Right	54500 4F102	c:12.4	8	**GOM-148**	Silentblock For Susp.Arm	Part of 72-01-101/72-01-100 72-01-116/72-01-117	d:28.3
3	**111-01-181**	Tie Rod End	48520-4F125	c:10.9 th:FM12X1.25	9	**GOM-149**	Silentblock For Susp.Arm	Part of 72-01-101/72-01-100 72-01-116/72-01-117	
4	**106-01-198**	Stabiliser Link	45261-4F702	L:90	10	**72-01-116**	TCA Left	54501 6F600	c:13.1
5	**106-01-109**	Stabiliser Link	56261-47B01		11	**72-01-117**	TCA Right	54500 6F600	c:13.1
6	**111-01-183**	Ball Joint	40160-4F100	c:12.4	12	**73-01-105**	Ball Joint	Part of 72-01-116/72-01-117	c:13.1

O.E.M. names and numbers are used for reference purposes only Ashika assumes no responsibility for possible errors

MICRA (K12) 11/2002 ->

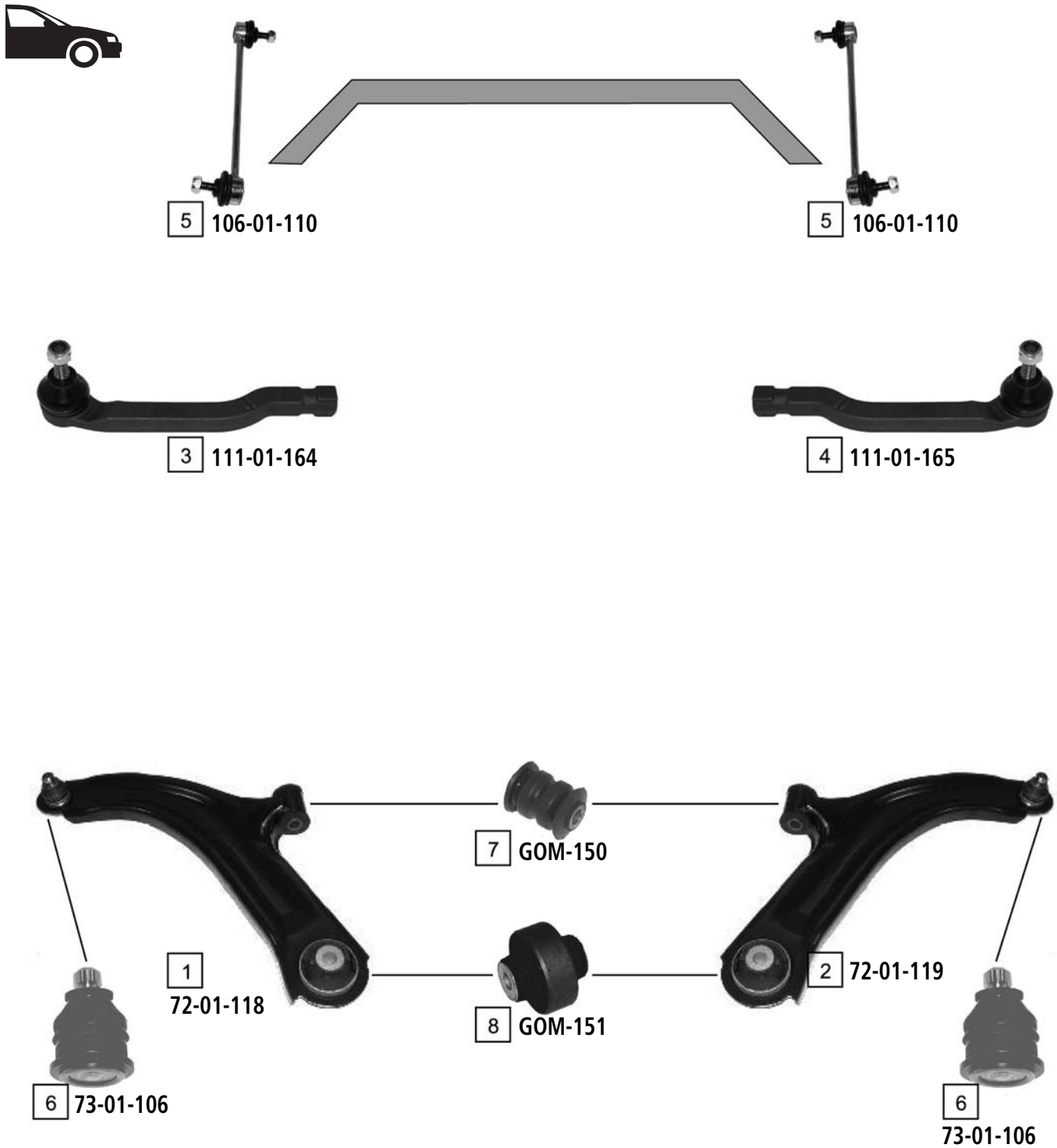

Ref	ASHIKA CODE	Description	OEM	Measures	Ref	ASHIKA CODE	Description	OEM	Measures
1	**72-01-118**	TCA Left	54501 AX600	c:16	5	**106-01-110**	Stabiliser Link	54618-AX600	L:248
2	**72-01-119**	TCA Right	54500 AX600	c:16	6	**73-01-106**	Ball Joint	Part of 72-01-118/72-01-119	c:16
3	**111-01-164**	Tie Rod End Left	48640 AX600	c:11.7 th:FM14X1.5R	7	**GOM-150**	Silentblock For Susp.Arm	54560 AX600	d:36.1
4	**111-01-165**	Tie Rod End Right	48520 AX600	c:11.7 th:FM14X1.5R	8	**GOM-151**	Silentblock For Susp.Arm	Part of 72-01-118/72-01-119	d:58.4

NAVARA (D40M) **07/2005 ->**

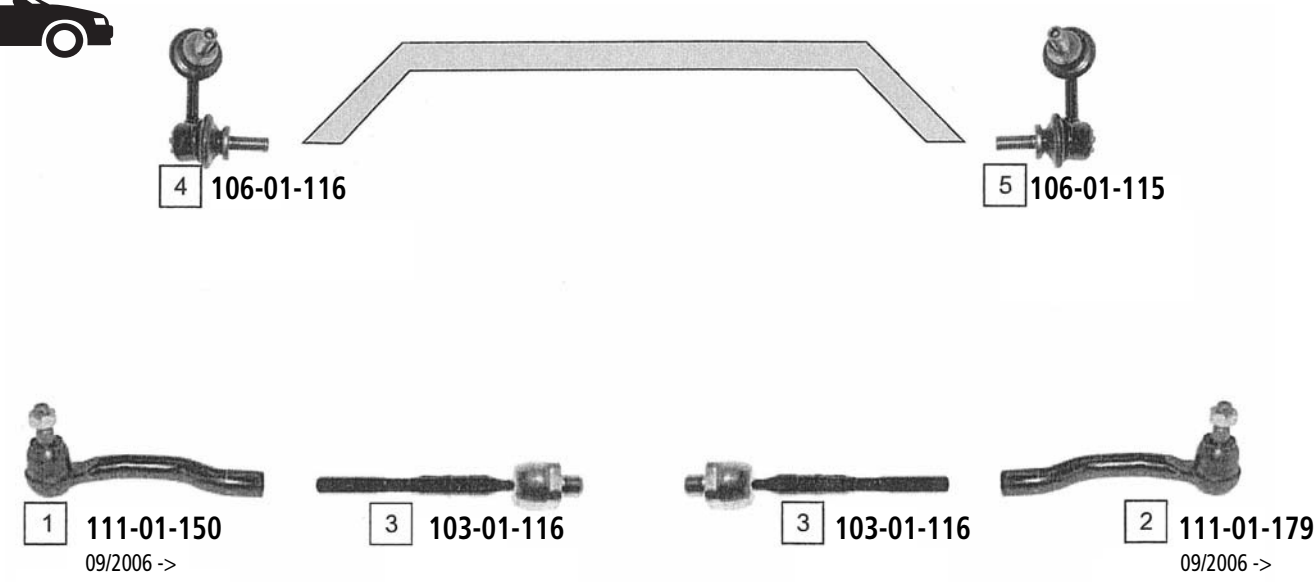

Ref	ASHIKA CODE	Description	OEM	Measures	Ref	ASHIKA CODE	Description	OEM	Measures
1	**111-01-150**	Tie Rod End Left	48520 EA01J	c:14.9 th:FM16X1.5R	4	**106-01-116**	Stabiliser Link Left	54668 EA010	-
2	**111-01-179**	Tie Rod End Right	48640 EA01J	c:14.9 th:FM16X1.5R	5	**106-01-115**	Stabiliser Link Right	54618 EA010	-
3	**103-01-116**	Axial Joint	48521 EA000	th:MM20X1R					

O.E.M. names and numbers are used for reference purposes only Ashika assumes no responsibility for possible errors

NOTE (E11) 03/2006 ->

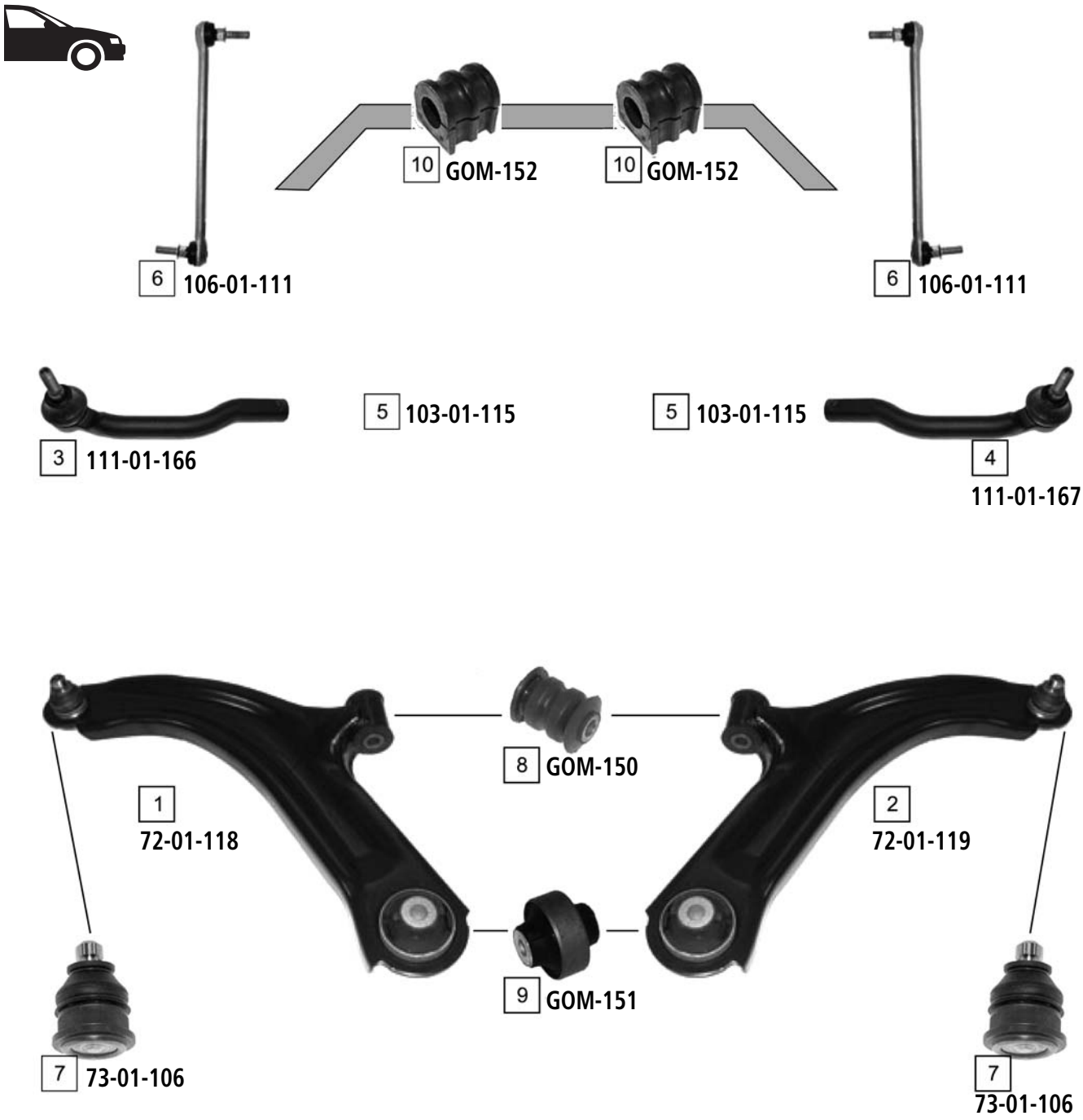

Ref	ASHIKA CODE	Description	OEM	Measures	Ref	ASHIKA CODE	Description	OEM	Measures
1	**72-01-118**	TCA Left	54501 AX600	c:16	6	**106-01-111**	Stabiliser Link	54618 9U00A	L:255
2	**72-01-119**	TCA Right	54500 AX600	c:16	7	**73-01-106**	Ball Joint	Part of 72-01-118/72-01-119	c:16
3	**111-01-166**	Tie Rod End Left	486471U61A	c:11.8 th:FM12X1.25	8	**GOM-150**	Silentblock For Susp.Arm	54560-AX600	d:36.1
4	**111-01-167**	Tie Rod End Left	48527 1U61A	c:11.8 th:FM12X1.25	9	**GOM-151**	Silentblock For Susp.Arm	Part of 72-01-118/72-01-119	d:58.4
5	**103-01-115**	Axial Joint	Part of	-	10	**GOM-152**	Stabiliser Mounting	54613 9U000	d:21

PATHFINDER (R50) **01/10/1997 ->**

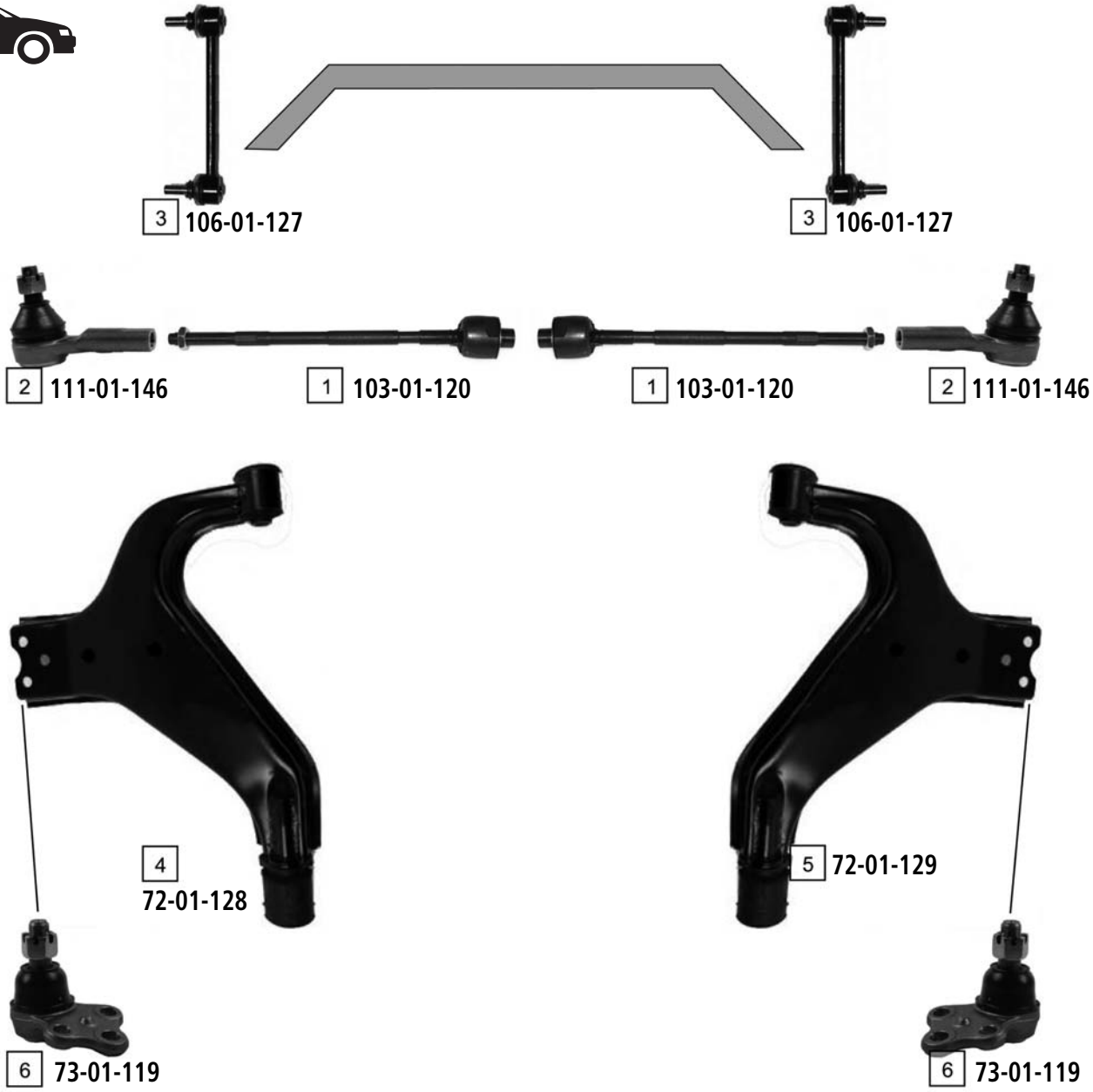

Ref	ASHIKA CODE	Description	OEM	Measures	Ref	ASHIKA CODE	Description	OEM	Measures
1	**103-01-120**	Axial Joint	48521 0W025	th:MM20X1.5R L:328	5	**72-01-129**	TCA Right	54500 0W001	
2	**111-01-146**	Tie Rod End	48520 0W025	c:14.8 th:FM14X1.5R	6	**73-01-119**	Ball Joint	40160 0W025	c:17
3	**106-01-127**	Stabiliser Link	54618 0W001	L:190	7	**106-01-128**	Stabiliser Link	56260 0W001	L:163
4	**72-01-128**	TCA Left	54501 OW001						

O.E.M. names and numbers are used for reference purposes only Ashika assumes no responsibility for possible errors

PATHFINDER (R51M) **01/2005 ->**

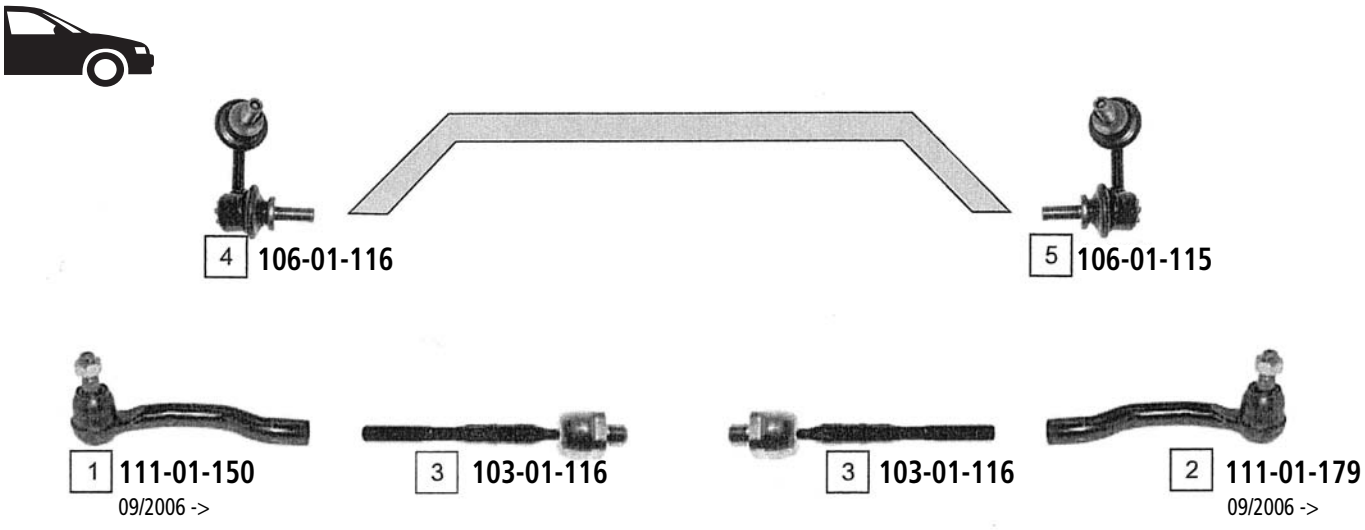

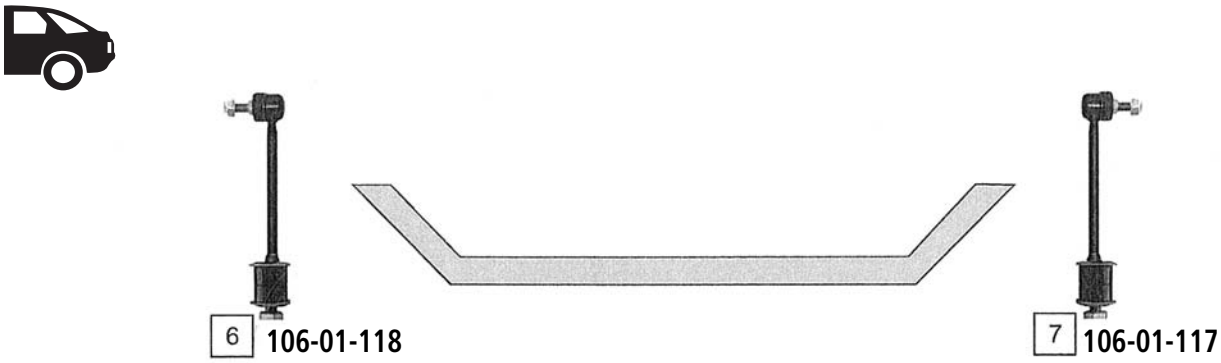

Ref	ASHIKA CODE	Description	OEM	Measures	Ref	ASHIKA CODE	Description	OEM	Measures
1	**111-01-150**	Tie Rod End Left	48520 EA01J	c:14.9 th:FM16X1.5R	5	**106-01-115**	Stabiliser Link Right	54618 EA010	-
2	**111-01-179**	Tie Rod End Right	48640 EA01J	c:14.9 th:FM16X1.5R	6	**106-01-118**	Stabiliser Link Left	56261 EA510	-
3	**103-01-116**	Axial Joint	48521 EA000	th:MM20X1R	7	**106-01-117**	Stabiliser Link Right	56261 EA500	-
4	**106-01-116**	Stabiliser Link Left	54668 EA010	-					

PATROL R (160) **11/1979 - 08/1988**

2
111-01-110L

1
111-01-110R

1
111-01-110R

2
111-01-110L

3 **111-01-152**

3 **111-01-152**

4 **111-0N-N006**

5 **111-0N-N005**

6 **111-0N-N007**

7 **111-0N-N008**

8 **111-0N-N010**

9 **111-0N-N009**

Ref	ASHIKA CODE	Description	OEM	Measures	Ref	ASHIKA CODE	Description	OEM	Measures
1	111-01-110R	Tie Rod End	48580-J5100	c:15.8 th:MM22X1.5L	6	111-0N-N007	Tie Rod End		
2	111-01-110L	Tie Rod End	48570-J5100	c:15.8 th:MM22X1.5R	7	111-0N-N008	Tie Rod End		
3	111-01-152	Tie Rod End	4857011J00		8	111-0N-N010	Tie Rod End	48520-G9502	
4	111-0N-N006	Tie Rod End			9	111-0N-N009	Tie Rod End	48570-G9501	
5	111-0N-N005	Tie Rod End							

O.E.M. names and numbers are used for reference purposes only Ashika assumes no responsibility for possible errors

PATROL GR (Y60) **08/1987 - 09/1997**

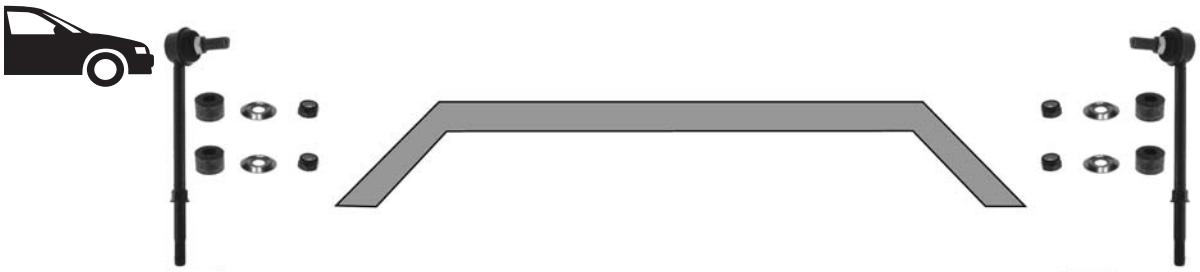

3 **106-01-112**

3 **106-01-112**

4 **111-01-158**
-> 06/1992

4 **111-01-158**
-> 06/1992

1 **111-01-172**

5 **111-0N-N011**
-> 07/1989

6 **111-0N-N012**
08/1989 ->

2 **111-01-173**

3 **106-01-112**

3 **106-01-112**

Ref	ASHIKA CODE	Description	OEM	Measures	Ref	ASHIKA CODE	Description	OEM	Measures
1	**111-01-172**	Tie Rod End Left	48570 01J10		4	**111-01-158**	Tie Rod End	4852001J00	
2	**111-01-173**	Tie Rod End Right	48520 01J10		5	**111-0N-NO11**	Cross Rod Assi	4856049502	
3	**106-01-112**	Stabiliser Link	56260 01J10	L:130	6	**111-0N-NO12**	Cross Rod Assi		

PICK-UP 2X4 (D21) **08/1985 - 02/1998**

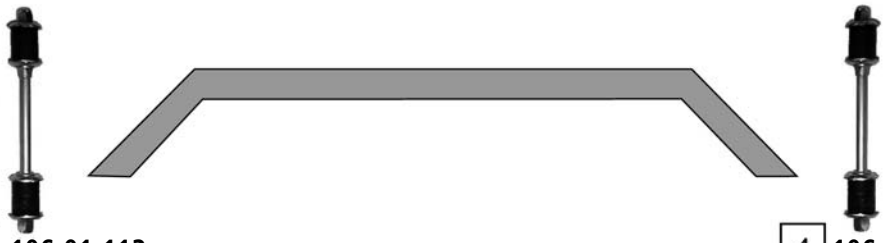

4 106-01-113

4 106-01-113

2 111-01-139

3 111-01-141

11 105-01-115

3 111-01-141

2 111-01-139

11 105-01-115

9 27-01-113

10 59-01-118

UPPER

1 73-01-111

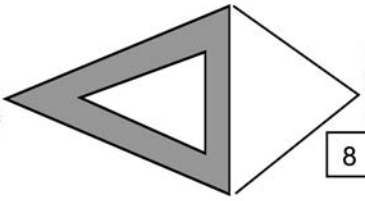

8 GOM-108

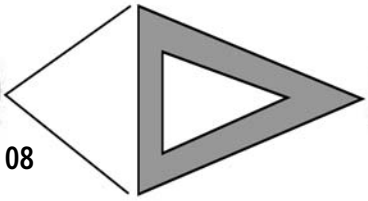

1 73-01-111

LOWER

5 53-01-190

6 71-01-100

7 71-01-101

5 53-01-190

Ref	ASHIKA CODE	Description	OEM	Measures	Ref	ASHIKA CODE	Description	OEM	Measures
1	**73-01-111**	Ball Joint	40110 01G00	c:16.1	7	**71-01-101**	TCA Right	54502-01G90	c:19.65
2	**111-01-139**	Tie Rod End	48520-01G25	c:13.3 th:MM18X1.5L	8	**GOM-108**	Silentblock For Susp.Arm	54506-B9500	d:41.1
3	**111-01-141**	Tie Rod End Inner	48521-01G25	c:13.2 th:MM18X1.5R	9	**27-01-113**	Cross Rod	4856009G25	
4	**106-01-113**	Stabiliser Link	54618 01G00	L:195	10	**59-01-118**	Pitman Arm	4853001G25	
5	**53-01-190**	Ball Joint Lower	40160 01G25	c:19.5	11	**105-01-115**	Tie Rod	4851001G025	
6	**71-01-100**	TCA Left	54503-01G90	c:19.65					

O.E.M. names and numbers are used for reference purposes only Ashika assumes no responsibility for possible errors

PICK-UP 4X4 (D21) **08/1985 - 02/1998**

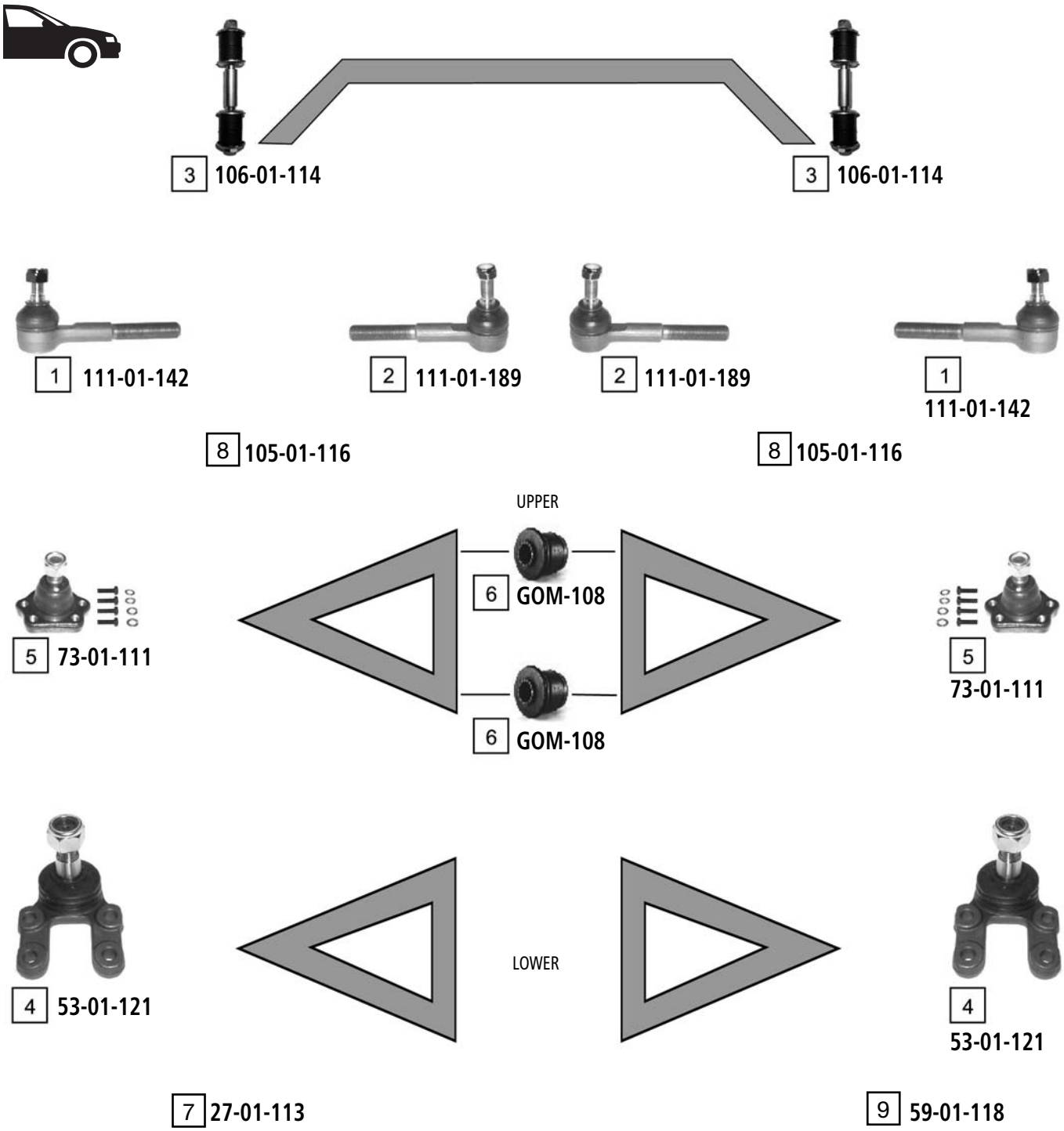

Ref	ASHIKA CODE	Description	OEM	Measures	Ref	ASHIKA CODE	Description	OEM	Measures
1	**111-01-142**	Tie Rod End Outer	48520 31G25	c:13.2 th:MM16X1.5R	6	**GOM-108**	Silentblock For Susp.Arm	54506-B9500	d:41.1
2	**111-01-189**	Tie Rod End Inner	48520 7F001	c:13.3 th:MM16X1.5L	7	**27-01-113**	Cross Road	48560 09G25	
3	**106-01-114**	Stabiliser Link	54618 02E00	L:140	8	**105-01-116**	Tie Rod	48510 31G25	
4	**53-01-121**	Ball Joint Lower	40160 0F000	c:19.5	9	**59-01-118**	Pitman Arm	48530 01G25	
5	**73-01-111**	Ball Joint	40110 01G00	c:16.1					

PICK-UP (D22) KING CAB 09/1998 ->

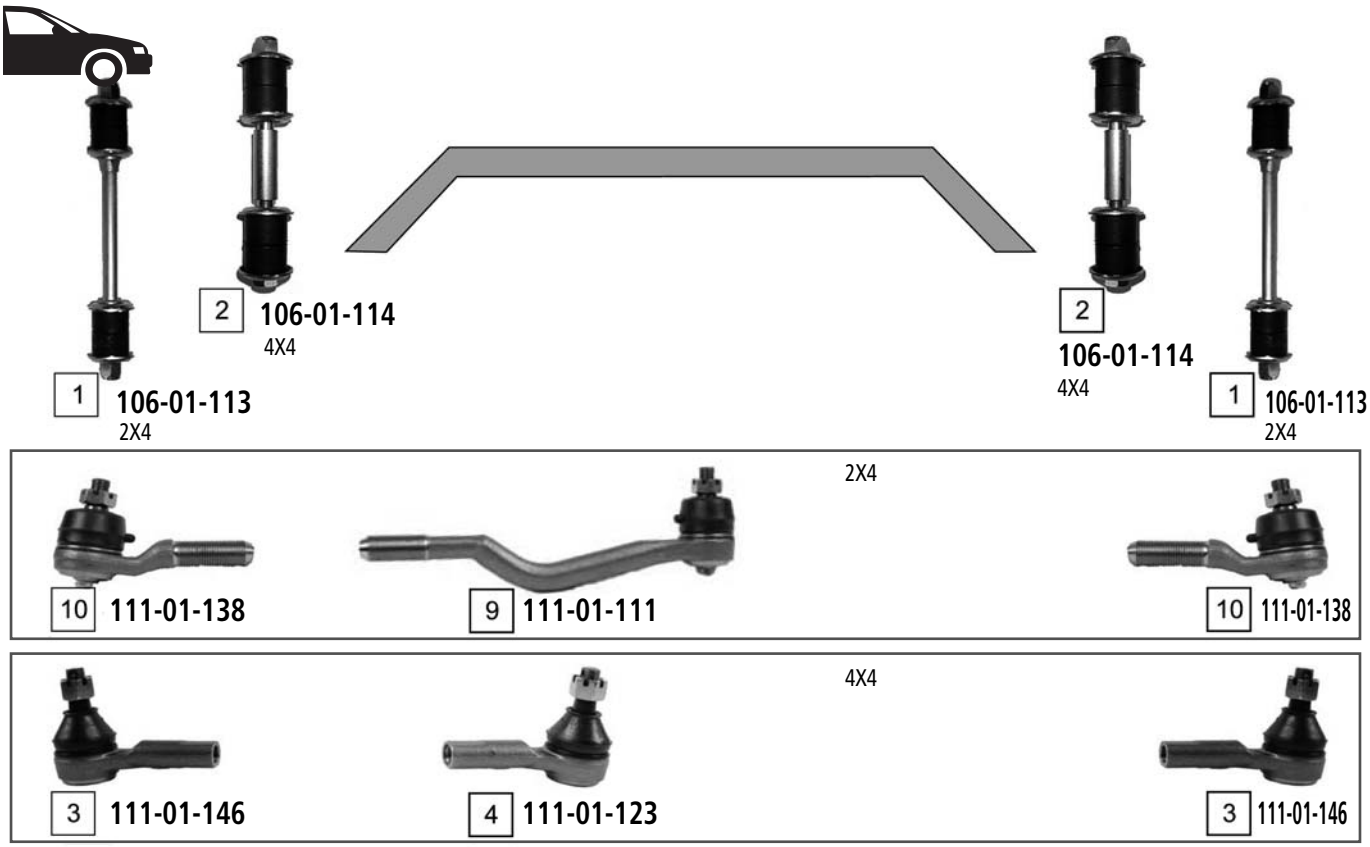

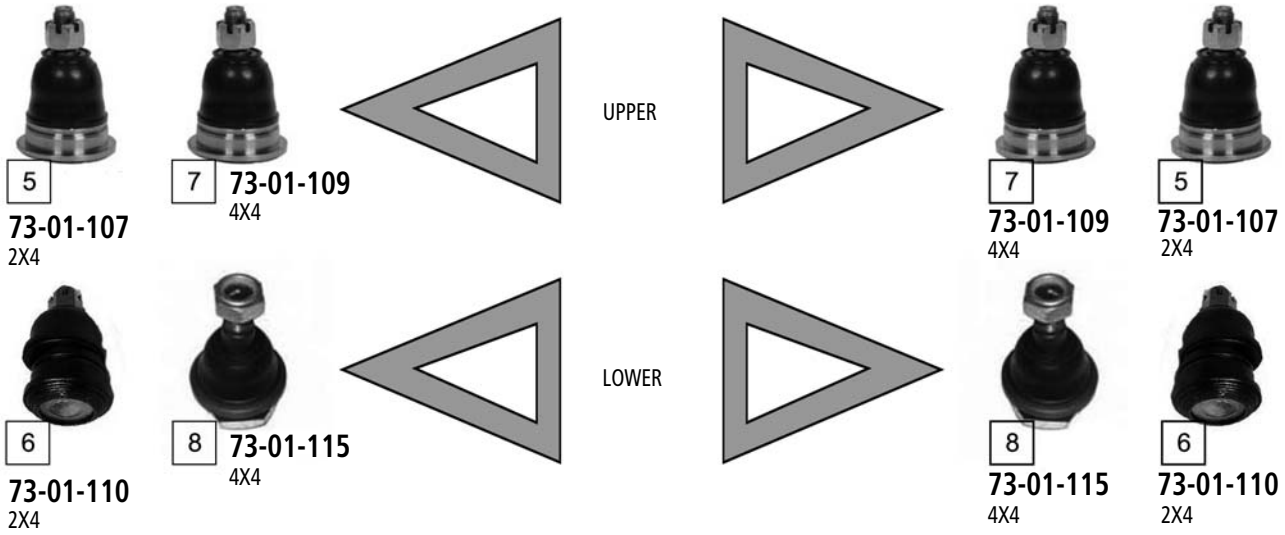

Ref	ASHIKA CODE	Description	OEM	Measures	Ref	ASHIKA CODE	Description	OEM	Measures
1	106-01-113	Stabiliser Link	54618 01G00	L: 195	6	73-01-110	Ball Joint	40160 2S485	-
2	106-01-114	Stabiliser Link	54618 02E00	L: 140	7	73-01-109	Ball Joint	40110 2S685	-
3	111-01-146	Tie Rod End	48520 0W025	c: 14.8 th:FM14x1.5R	8	73-01-115	Ball Joint	40160 2S601	-
4	111-01-123	Tie Rod End Inner	48570 3S525	-	9	111-01-111	Tie Rod End Inner	48521 2S425	-
5	73-01-107	Ball Joint	40110 2S485	-	10	111-01-138	Tie Rod End Outer	48520 2S425	-

O.E.M. names and numbers are used for reference purposes only Ashika assumes no responsibility for possible errors

PRAIRIE (M10, NM10) **01/1983 - 10/1998**
PRAIRIE PRO (M11) **10/1988 - 07/1994**

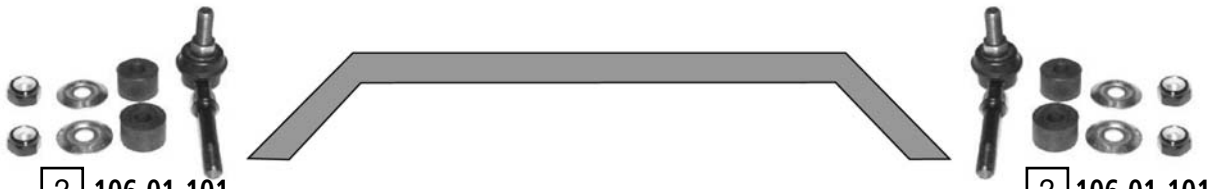

2 **106-01-101**
10/1988 ->

2 **106-01-101**
10/1988 ->

4X4

1 **111-01-180**

1 **111-01-180**

2X4

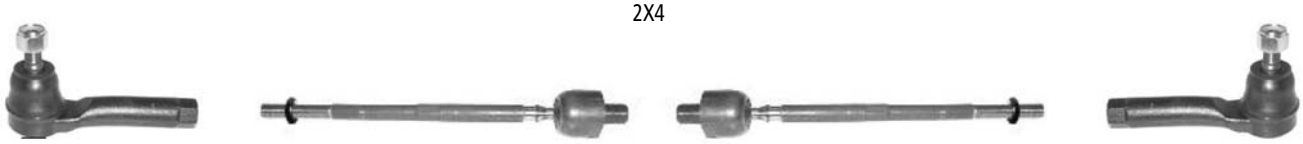

4 **111-01-185**

6 **103-01-101**

6 **103-01-101**

4 **111-01-185**

-> 10/1988

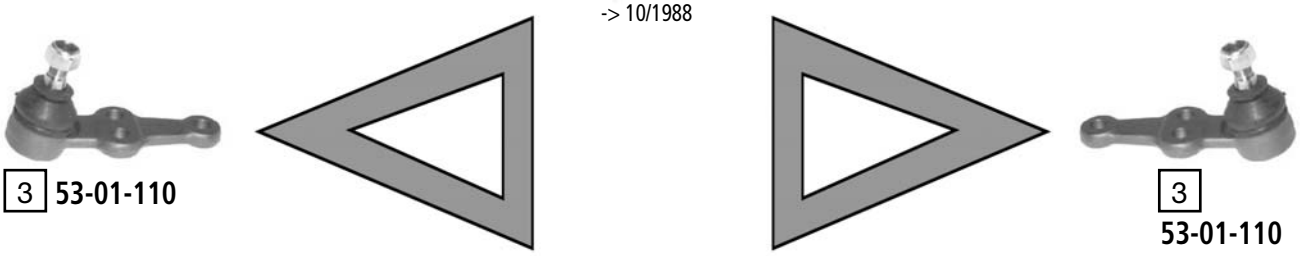

3 **53-01-110**

3 **53-01-110**

10/1988 ->

5 **73-01-124**

5 **73-01-124**

Ref	ASHIKA CODE	Description	OEM	Measures	Ref	ASHIKA CODE	Description	OEM	Measures
1	**111-01-180**	Axial Joint	48521-72E06	th:MM16X1R L:260	4	**111-01-185**	Tie Rod End	48520 53E25	c:13 th:FM12X1.25R
2	**106-01-101**	Stabiliser Link	54618 50Y00	L:85.5	5	**73-01-124**	Ball Joint Lower	40160 01E00	c:14.9
3	**53-01-110**	Ball Joint Lower	40160-01A25	c:13	6	**103-01-101**	Axial Joint	48521-35F00	th:MM16X1R L:270

PRIMASTAR (X83) **03/2001 ->**

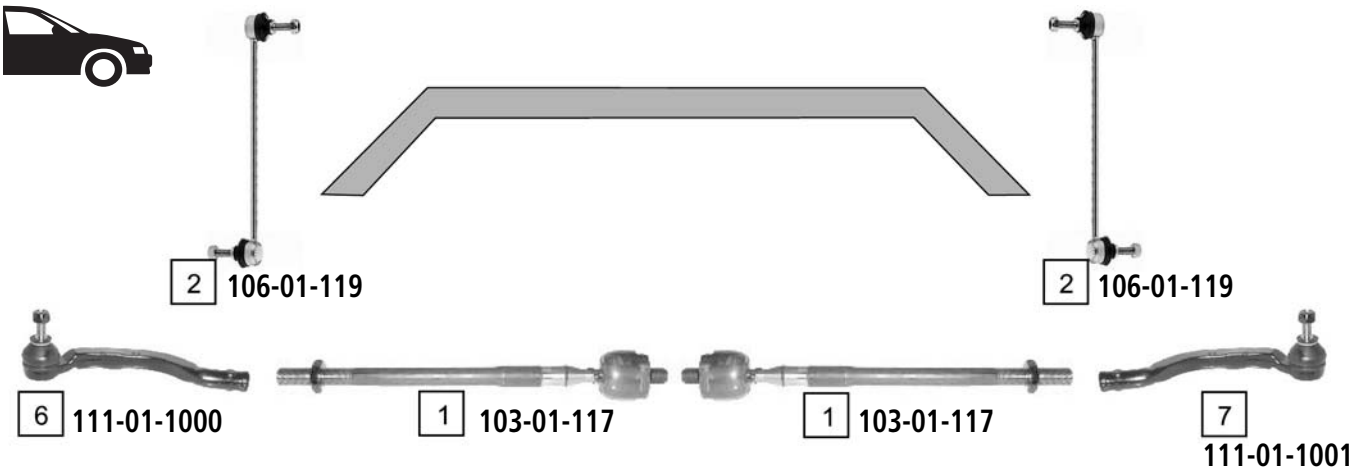

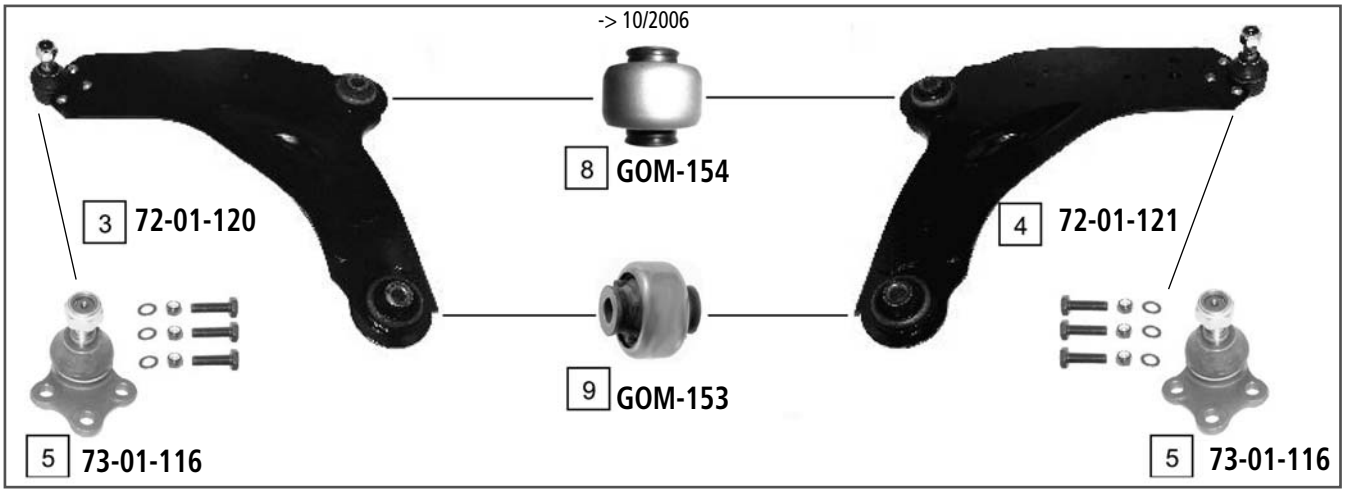

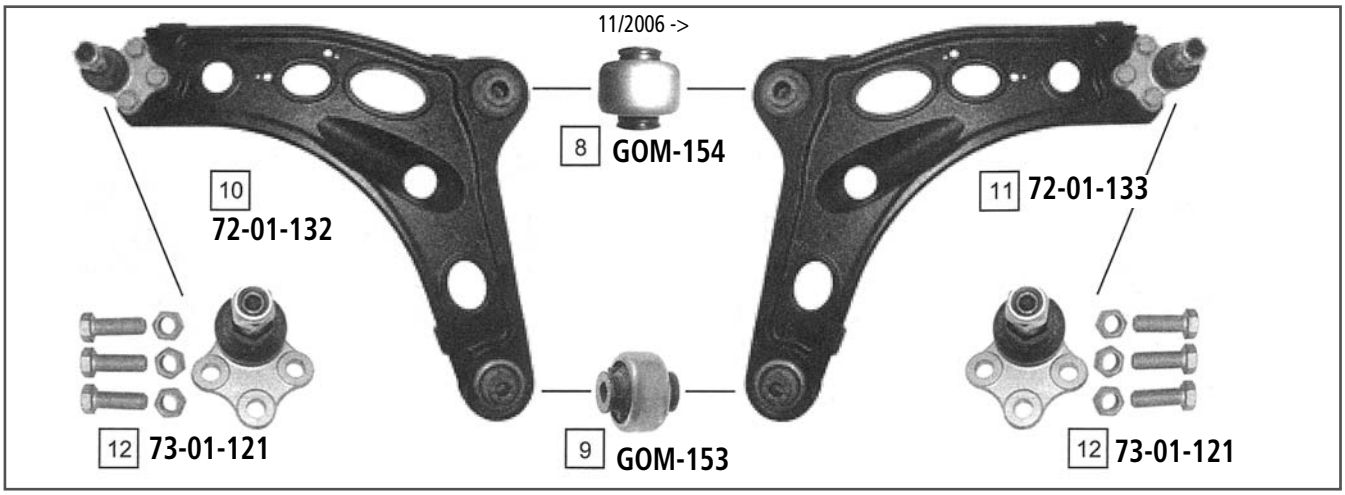

Ref	ASHIKA CODE	Description	OEM	Measures	Ref	ASHIKA CODE	Description	OEM	Measures
1	**103-01-117**	Axial Joint	48520-00QAM	th:MM12X1R L:263	7	**111-01-1001**	Tie Rod End Right	48520-00QAL	c:12 th:FM14X1.5R
2	**106-01-119**	Stabiliser Link	54616-00QAC	L:366	8	**GOM-154**	Silentblock For Susp.Arm	Part of 72-01-120/121/132/133	d:54
3	**72-01-120**	TCA Left Wbj	54503-00QAA	c:18	9	**GOM-153**	Silentblock For Susp.Arm	Part of 72-01-120/121/132/133	d:54.6
4	**72-01-121**	TCA Right Wbj	55502-00QAA	c:18	10	**72-01-132**	TCA Left Wbj	82 00 626 959	c:18
5	**73-01-116**	Ball Joint Lower	Part of 72-01-120/121	c:18	11	**72-01-133**	TCA Right Wbj	82 00 565 079	c:18
6	**111-01-1000**	Tie Rod End Left	48520-00QAK	c:12 th:FM14X1.5R	12	**73-01-121**	Ball Joint	40 160 00Q0A	c:18

O.E.M. names and numbers are used for reference purposes only Ashika assumes no responsibility for possible errors

PRIMERA (P10) **06/1990 - 06/1996**

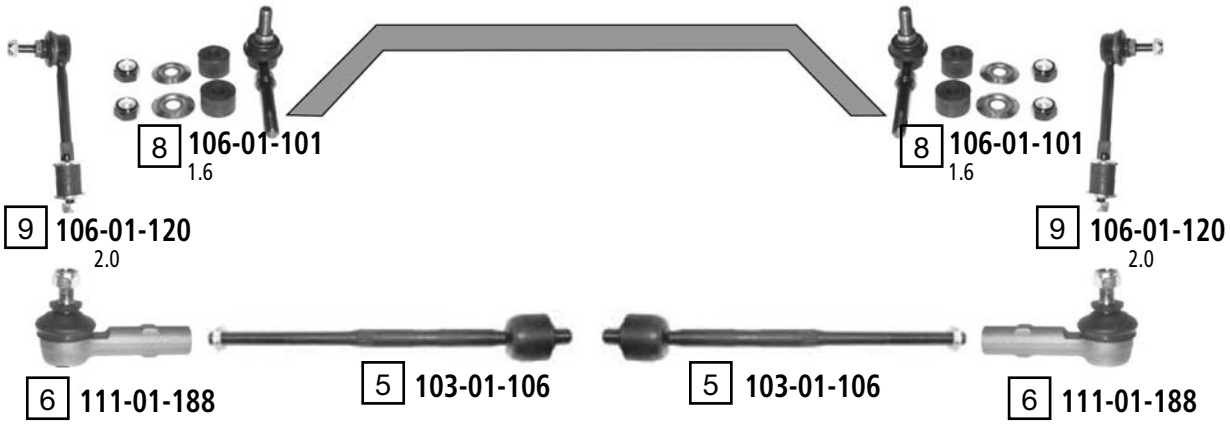

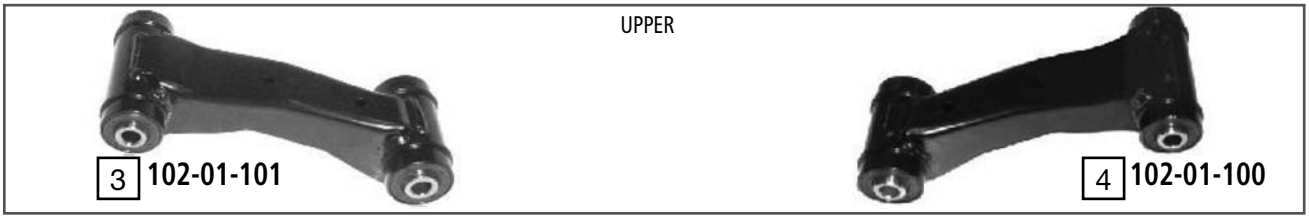

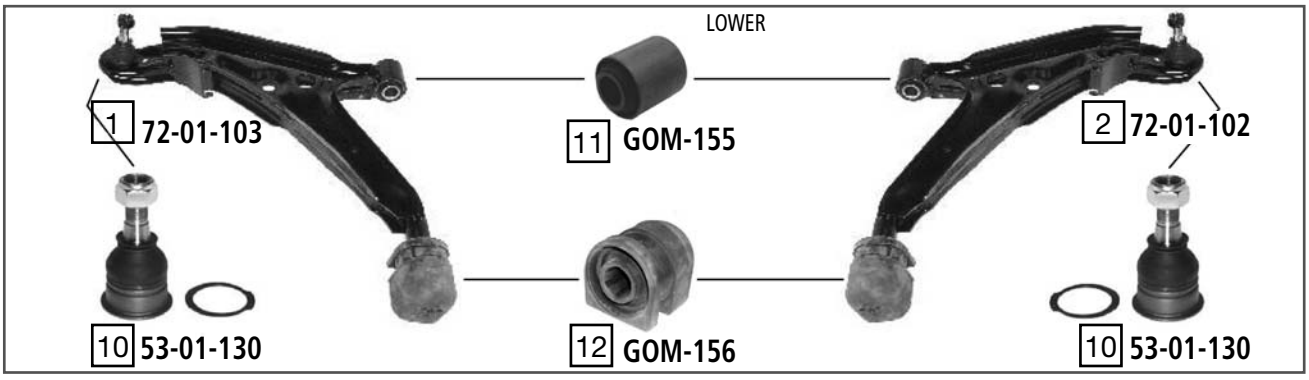

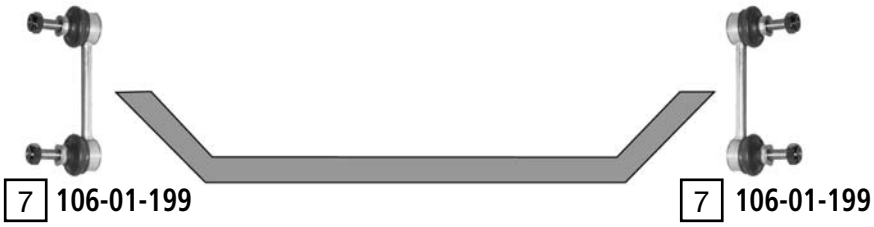

Ref	ASHIKA CODE	Description	OEM	Measures	Ref	ASHIKA CODE	Description	OEM	Measures
1	**72-01-103**	TCA Left	54501-86J00	c:15	7	**106-01-199**	Stabiliser Link	56261-86J25	L:114.5
2	**72-01-102**	TCA Right	54500-86J00	c:15	8	**106-01-101**	Stabiliser Link	5461850Y00	L:85.5
3	**102-01-101**	TCA Left	54525-2F010		9	**106-01-120**	Stabiliser Link	54618-50J20	L:160
4	**102-01-100**	TCA Right	54524-2F010		10	**53-01-130**	Ball Joint	40160 60Y60	
5	**103-01-106**	Axial Joint	48521-72E00	th:MM14X1.5R L:273	11	**GOM-155**	Silentblock For Susp.Arm	Part of 72-01-102/72-01-103	d:38.1
6	**111-01-188**	Tie Rod End	48520 73J25	c:13 th:FM12X1.25R	12	**GOM-156**	Silentblock For Susp.Arm	Part of 72-01-102/72-01-103	d:20

PRIMERA (P11) **06/1996 - 12/2001**

UPPER

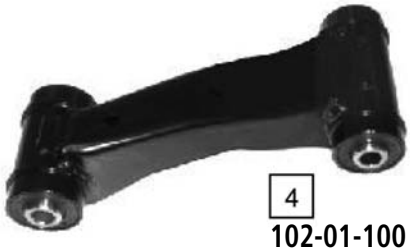

LOWER

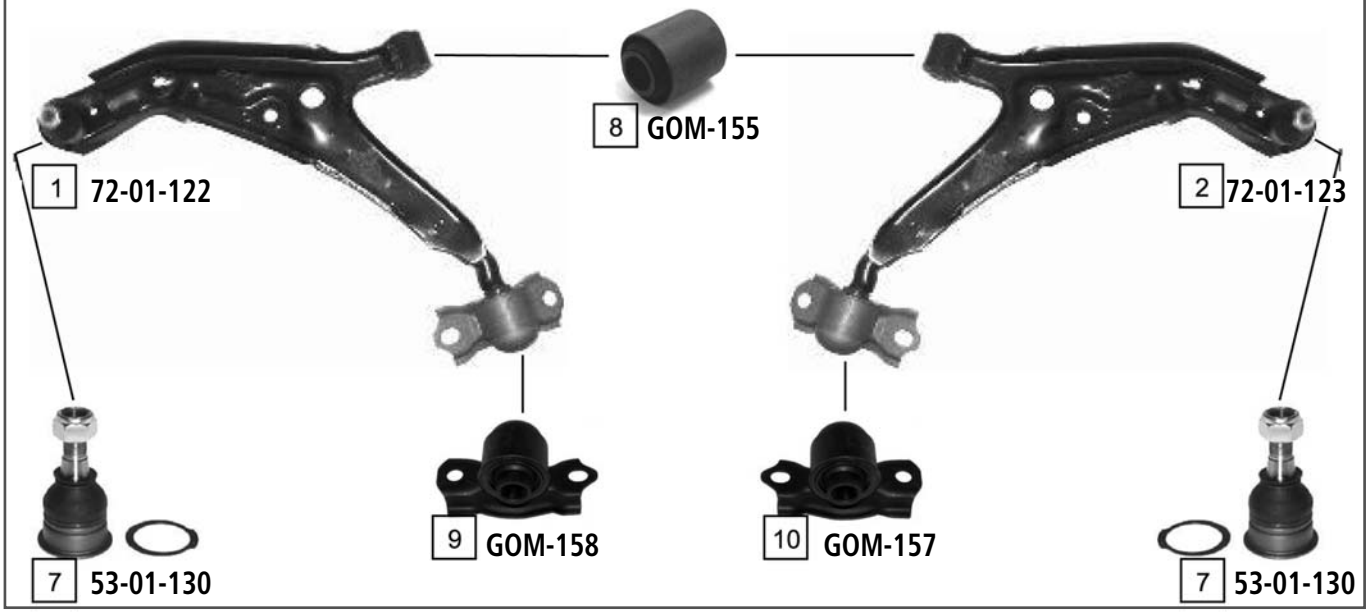

Ref	ASHIKA CODE	Description	OEM	Measures	Ref	ASHIKA CODE	Description	OEM	Measures
1	**72-01-122**	TCA Left	54501-2F500	c:15	6	**111-01-188**	Tie Rod End	48520 73J25	c:13 th:FM12X1.25R
2	**72-01-123**	TCA Right	54500-2F500	c:15	7	**53-01-130**	Ball Joint	40160-60Y60	c:15
3	**102-01-101**	TCA Left	54525-2F010		8	**GOM-155**	Silentblock For Susp.Arm	Part of 72-01-122/72-01-123	d:38.1
4	**102-01-100**	TCA Right	54524-2F010		9	**GOM-158**	Silentblock For Susp.Arm	Part of 72-01-122	
5	**103-01-106**	Axial Joint	4852172E00	th:MM14X1.5R L:273	10	**GOM-157**	Silentblock For Susp.Arm	Part of 72-01-122	

O.E.M. names and numbers are used for reference purposes only Ashika assumes no responsibility for possible errors

PRIMERA (P12,WP12) **03/2002 ->**

7 106-01-122

8 106-01-121

1 111-01-188

6 103-01-118

6 103-01-118

1 111-01-188

11 71-01-102

UPPER

4 71-01-103

9 GOM-159

LOWER

2 72-01-124

3 72-01-125

10 GOM-160

5 73-01-118

5 73-01-118

106-01-124 13
-> 10/2002

12 106-01-123
10/2002 ->

106-01-123 12
10/2002 ->

13 106-01-124
-> 10/2002

Ref	ASHIKA CODE	Description	OEM	Measures	Ref	ASHIKA CODE	Description	OEM	Measures
1	**111-01-188**	Tie Rod End	48520-73J25	c:12.9 th:FM12X1.25	8	**106-01-121**	Stabiliser Link Right	54618-AU000	L:65
2	**72-01-124**	TCA Left	54501 AV605		9	**GOM-159**	Silentblock For Susp.Arm	Part of 72-01-124/72-01-125	
3	**72-01-125**	TCA Right	54500-AV600		10	**GOM-160**	Silentblock For Susp.Arm	Part of 72-01-124/72-01-125	
4	**71-01-103**	TCA Right	54524 AV600	c:13	11	**71-01-102**	TCA Left	54525 AV600	c:13
5	**73-01-118**	Ball Joint	Part of 41170/1	c:15.2	12	**106-01-123**	Stabiliser Link	56261 AV610	L:90.5
6	**103-01-118**	Axial Joint	Part of	th:MM18X1.5R L:280	13	**106-01-124**	Stabiliser Link	56261 0E000	L:91
7	**106-01-122**	Stabiliser Link Left	54668-AU000	L:65					

PRIMERA TRAVELLER (WP11) **04/1998 - 12/2001**

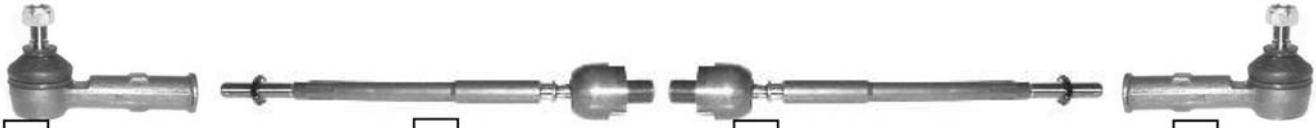

5 111-01-109 6 76-01-190 6 76-01-190 5 111-01-109

UPPER

3 102-01-101

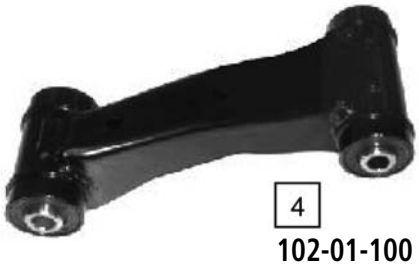

4 102-01-100

LOWER

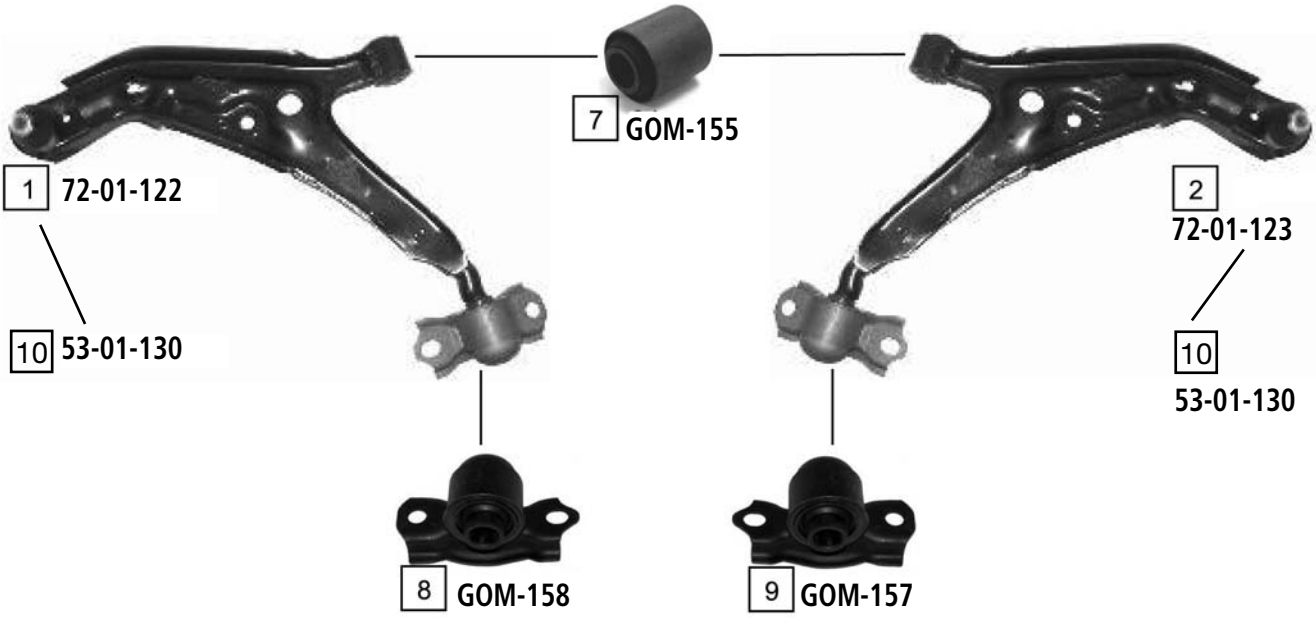

Ref	ASHIKA CODE	Description	OEM	Measures	Ref	ASHIKA CODE	Description	OEM	Measures
1	**72-01-122**	TCA Left	54501-2F500	c:15	6	**76-01-190**	Axial Joint	48521-50400	th:MM16X1R L:274.5
2	**72-01-123**	TCA Right	54500-2F500	c:15	7	**GOM-155**	Silentblock For Susp.Arm	Part of 72-01-122/BS123	d:38.1
3	**102-01-101**	TCA Left	54525-2F010		8	**GOM-158**	Silentblock For Susp.Arm	Part of 72-01-122	
4	**102-01-100**	TCA Right	54524-2F010		9	**GOM-157**	Silentblock For Susp.Arm	Part of 72-01-123	
5	**111-01-109**	Tie Rod End	48520-01E25	c:13 th:FM12X1.25R	10	**53-01-130**	Ball Joint	40160 60J60	

O.E.M. names and numbers are used for reference purposes only Ashika assumes no responsibility for possible errors

QASHQAI (J10E) 02/2007 ->

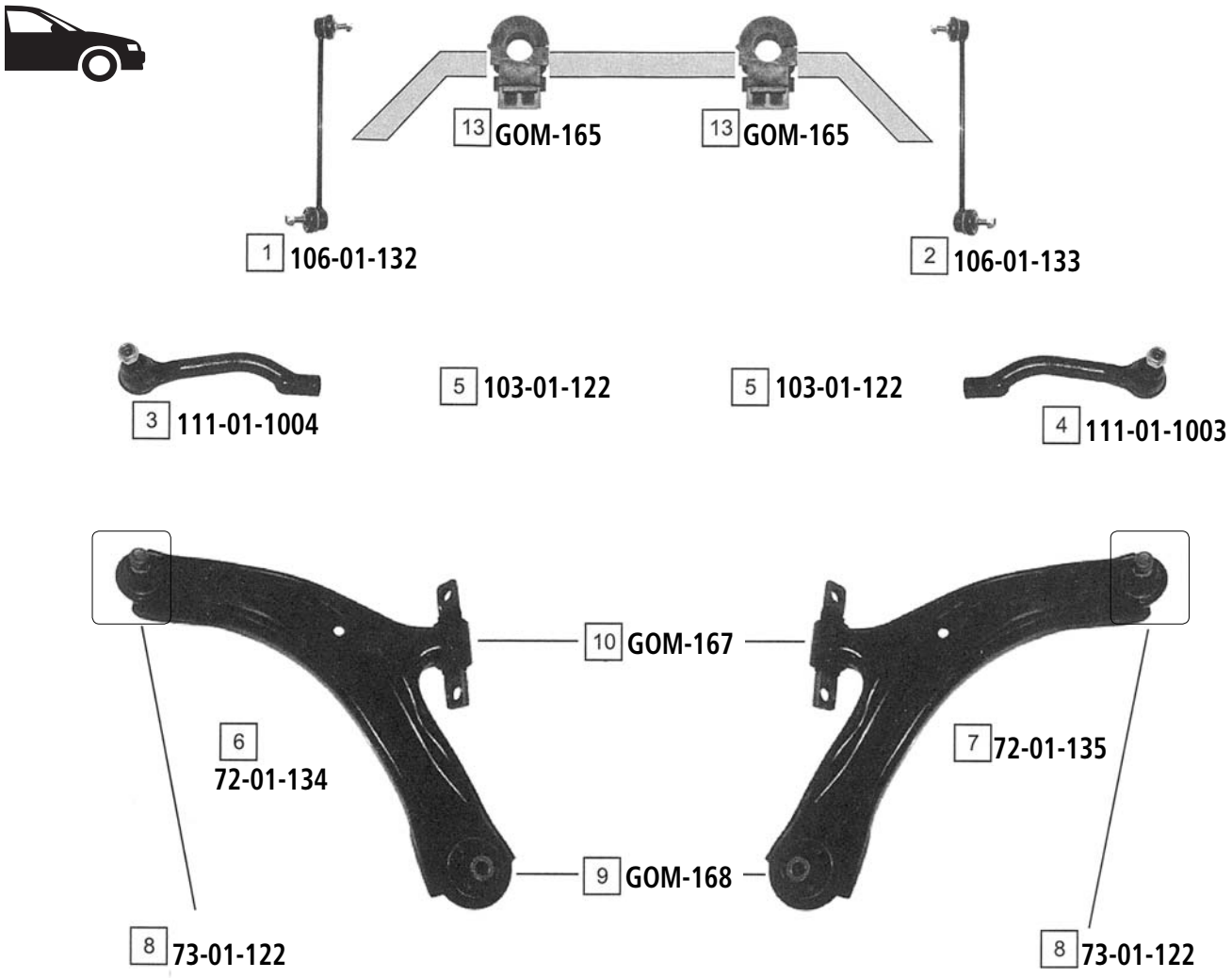

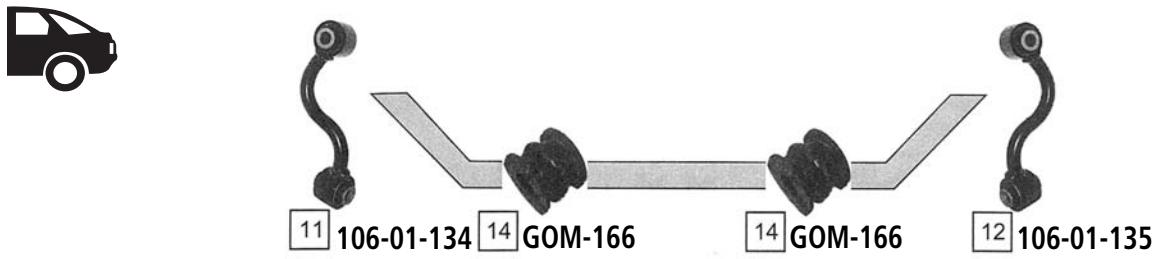

Ref	ASHIKA CODE	Description	OEM	Measures	Ref	ASHIKA CODE	Description	OEM	Measures
1	106-01-132	Stabiliser Link Left	54668 JD00A	L:300	8	73-01-122	Ball Joint Left and Right	Part of 72-01-134/72-01-135	c:20
2	106-01-133	Stabiliser Link Right	54618 JD00A	L:300	9	GOM-168	Silentblock For Susp.Arm	Part of 72-01-134/72-01-135	d:58
3	111-01-1004	Tie Rod End Left	48647 JD01A	c:12 th:FM14X1.5R	10	GOM-167	Silentblock For Susp.Arm	Part of 72-01-134/72-01-135	-
4	111-01-1003	Tie Rod End Right	45527 JD01A	c:12 th:FM14X1.5R	11	106-01-134	Stabiliser Link Left	55619 JD00A	-
5	103-01-122	Axial Joint	Part of	th:MM14X1.5R	12	106-01-135	Stabiliser Link Right	55618 JD00A	-
6	72-01-134	TCA Left WBJ	54501 JD000	c:20	13	GOM-165	Stabiliser Mounting	54613 JD03A	L:22.7
7	72-01-135	TCA Right WBJ	54500 JD000	c:20	14	GOM-166	Stabiliser Mounting	54613 JD18C	d:18

SERENA (C23M) — **10/1992 - 06/2001**
VANETTE CARGO (HC23) — **01/1995 - 06/2001**

09/1994 ->

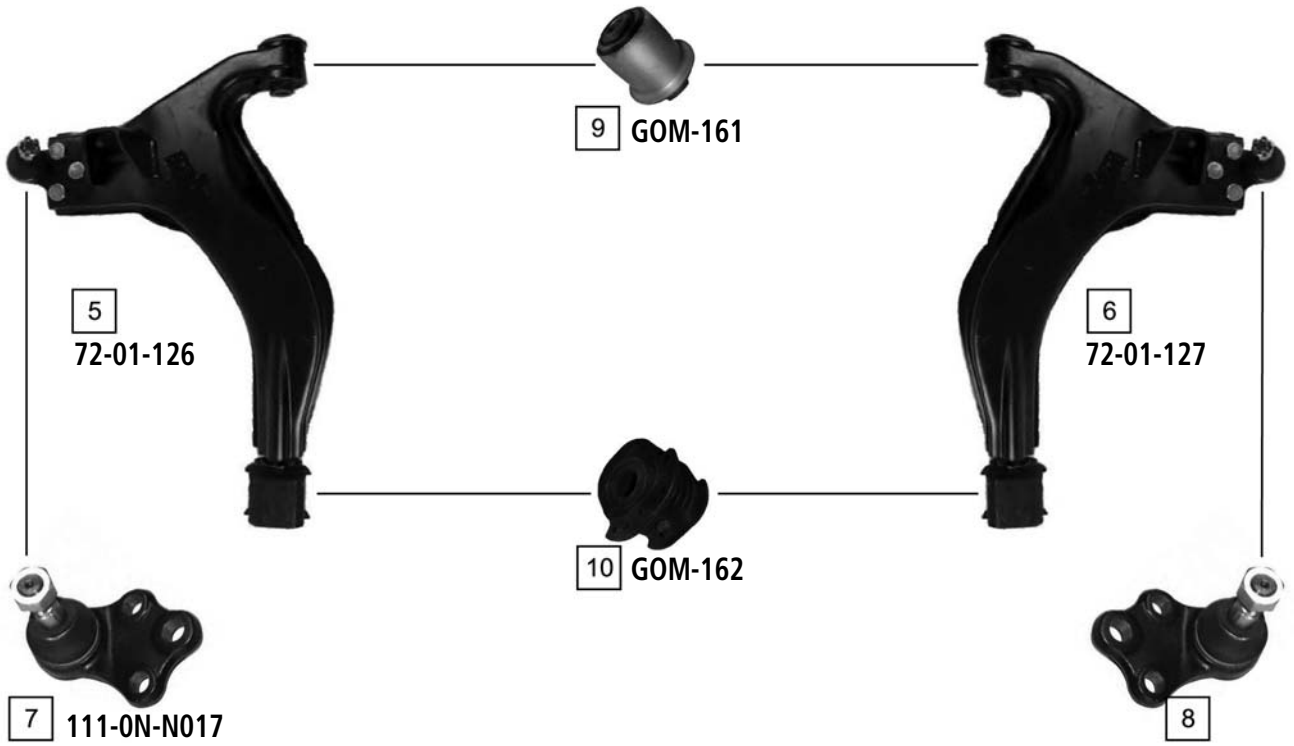

Ref	ASHIKA CODE	Description	OEM	Measures	Ref	ASHIKA CODE	Description	OEM	Measures
1	**111-01-188**	Tie Rod End	48520-73J25	c:12.9 th:FM12X1.25	6	**72-01-127**	TCA Right	54500 7C350	
2	**103-01-119**	Axial Joint	Part of	th:MM14X1.5R L:319	7	**111-0N-N017**	Ball Joint Left	40161 9C500	c:15
3	**111-0N-N020**	Stabiliser Link Left	54668 9C000	L:111	8	**111-0N-N016**	Ball Joint Right	40160 9C500	c:15
4	**111-0N-N019**	Stabiliser Link Right	54618 9C002	L:111	9	**GOM-161**	Silentblock For Susp.Arm	Part of 72-01-126/72-01-127	
5	**72-01-126**	TCA Left	54501 7C350		10	**GOM-162**	Silentblock For Susp.Arm	Part of 72-01-126/72-01-127	

O.E.M. names and numbers are used for reference purposes only Ashika assumes no responsibility for possible errors

STANZA (T11) 06/1981 - 12/1985

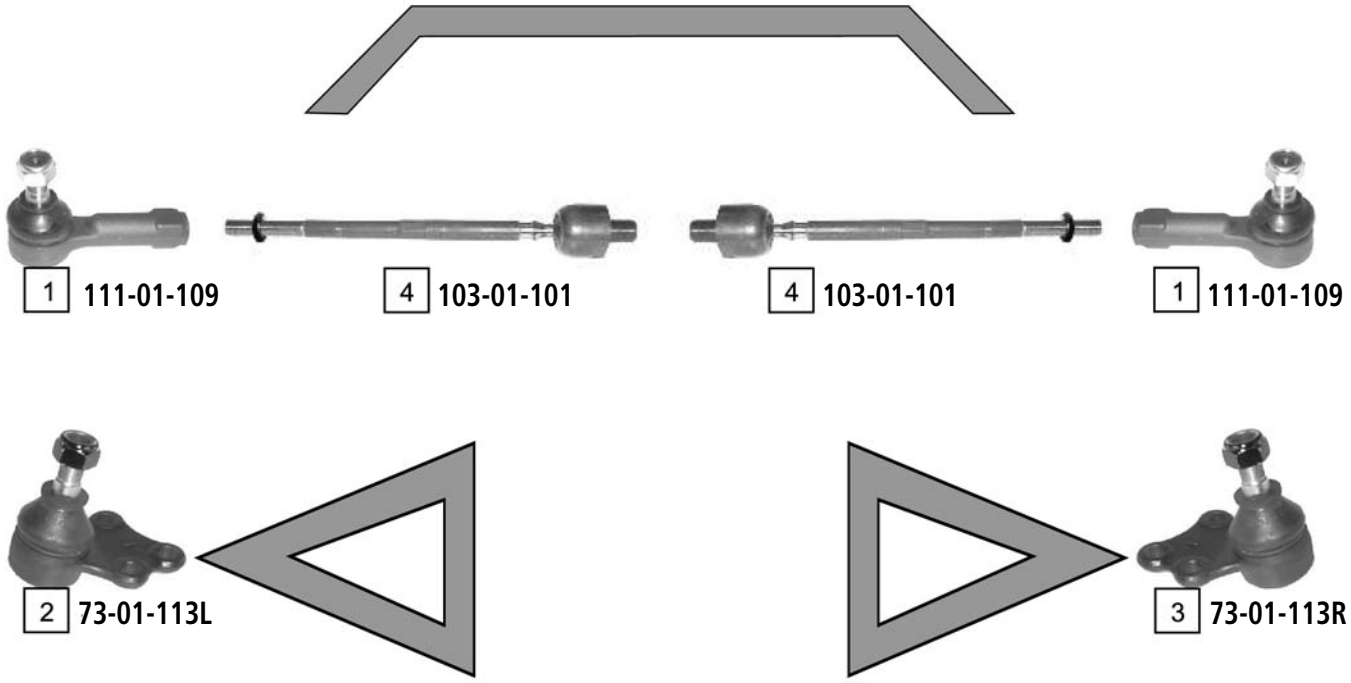

Ref	ASHIKA CODE	Description	OEM	Measures	Ref	ASHIKA CODE	Description	OEM	Measures
1	**111-01-109**	Tie Rod End	48520-D010	c:13 th:FM12X1.25R	3	**73-01-113R**	Ball Joint Lower Right	40160-D0125	c:14.5
2	**73-01-113L**	Ball Joint Lower Left	40161-D0125	c:14.5	4	**103-01-101**	Axial Joint	48521-35F00	th:MM16X1R L:270

SUNNY II (B12,N13) **06/1986 - 09/1990**

1 **106-01-101** 1 **106-01-101**

2X4 EXC 1.7D

5 **111-01-109** 6 **103-01-105** 6 **103-01-105** 5 **111-01-109**

4X4 - 1.7D

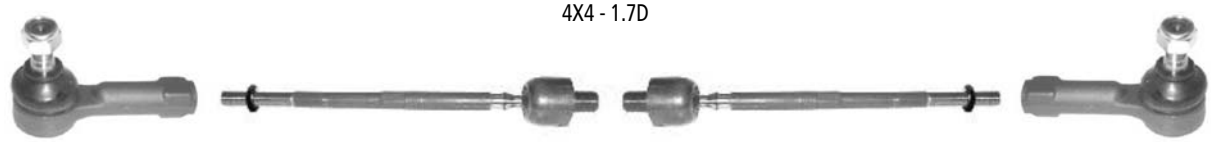

3 **111-01-109** 4 **103-01-101** 4 **103-01-101** 3 **111-01-109**

7 **GOM-138**

2 **53-01-130**

2 **53-01-130**

Ref	ASHIKA CODE	Description	OEM	Measures	Ref	ASHIKA CODE	Description	OEM	Measures
1	**106-01-101**	Stabiliser Link	54618-50Y00	L:87	5	**111-01-109**	Tie Rod End	48520-01E25	c:13 th:FM12X1.25R
2	**53-01-130**	Ball Joint Lower	40160-60960	c:15	6	**103-01-105**	Axial Joint	48521-35A00	
3	**111-01-109**	Tie Rod End	48520-D010	c:13 th:FM12X1.25R	7	**GOM-138**	Silentblock For Susp.Arm	54560-50A00	d:36.2
4	**103-01-101**	Axial Joint	48521-35F00	th:MM16X1R L:270					

O.E.M. names and numbers are used for reference purposes only Ashika assumes no responsibility for possible errors

SUNNY III (N14 EXC. 2.0GTi-R) 10/1990 - 06/1995

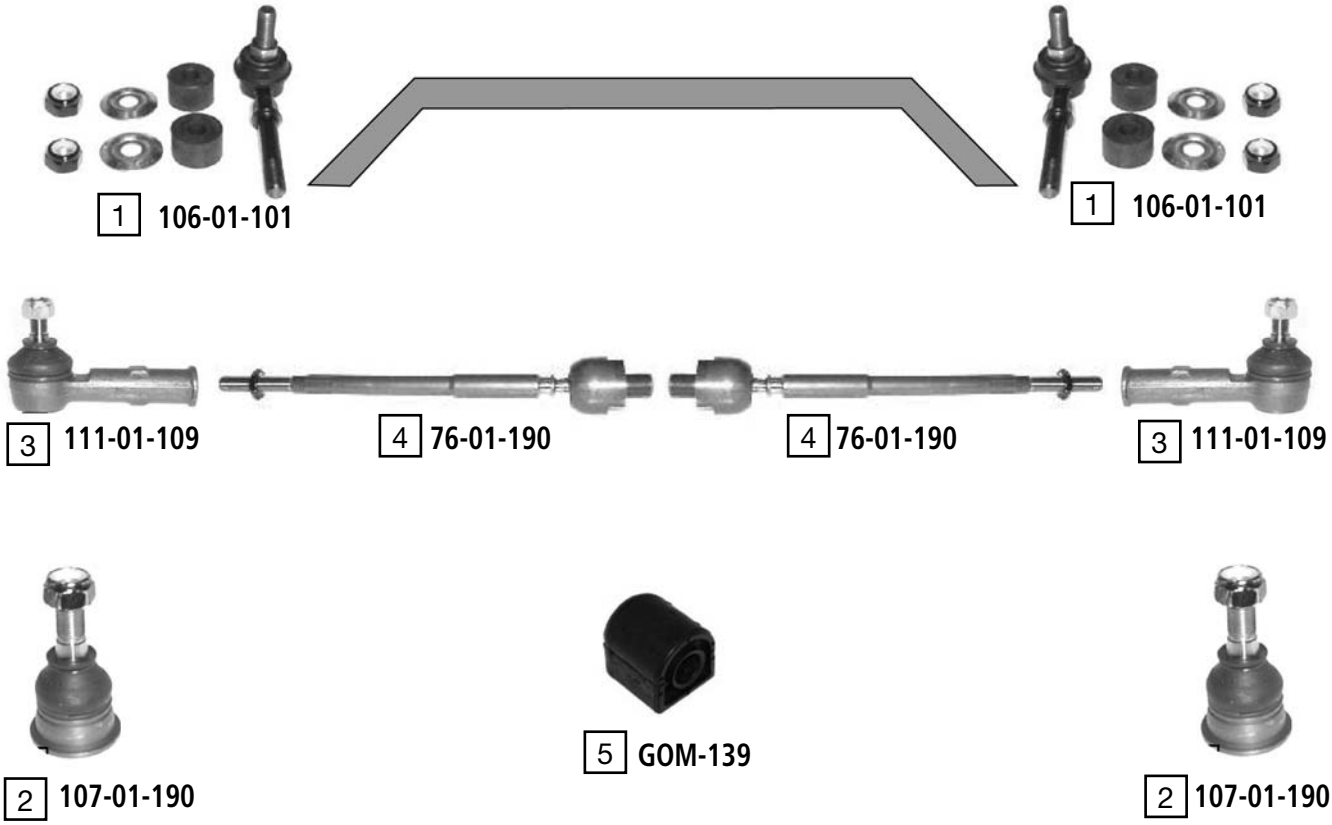

Ref	ASHIKA CODE	Description	OEM	Measures	Ref	ASHIKA CODE	Description	OEM	Measures
1	**106-01-101**	Stabiliser Link	54618 50Y00	L: 85.5	4	**76-01-190**	Axial Joint	48521-50400	th:MM16X1R L:274.5
2	**107-01-190**	Ball Joint	40161 52Y10	c:14.7	5	**GOM-139**	Silentblock For Susp.Arm	54570-69Y10	
3	**111-01-109**	Tie Rod End	48520-01E00	c:13 th:FM12X1.25R					

TERRANO I (WD21,VD21) **07/1986 - 02/1996**

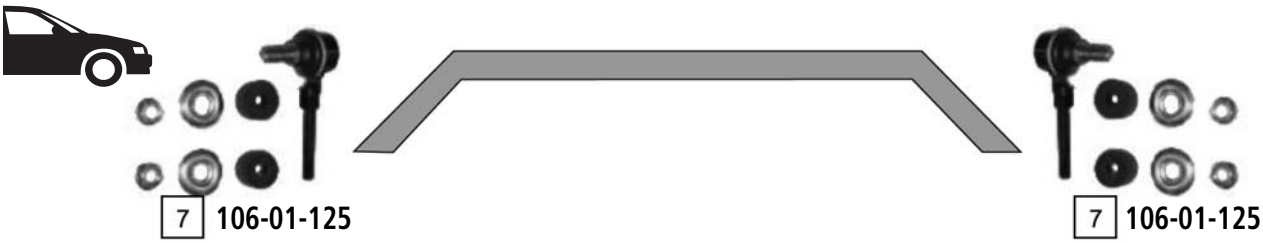

-> 08/1993

09/1993 ->

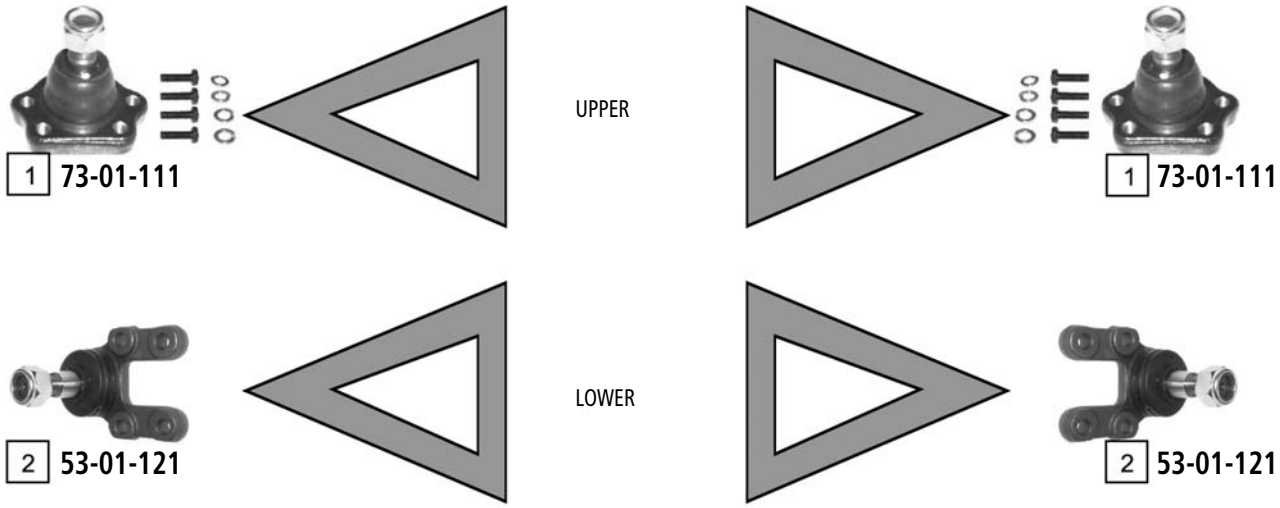

Ref	ASHIKA CODE	Description	OEM	Measures	Ref	ASHIKA CODE	Description	OEM	Measures
1	**73-01-111**	Ball Joint	40110 01G00	c:16.1	6	**111-01-197**	Tie Rod End Inner	48570 61G25	c:14.3 th:MM16X1.5L
2	**53-01-121**	Ball Joint Lower	40160 0F000	c:19.5	7	**106-01-125**	Stabiliser Link	54618 0F000	
3	**111-01-142**	Tie Rod End Outer	48520 31G25	c:13.2 th:MM16X1.5R	8	**59-01-119**	Pitman Arm	48530 35G25	
4	**111-01-189**	Tie Rod End Inner	48520 7F001	c:13.3 th:MM16X1.5L	9	**59-01-120**	Pitman Arm	48530 31G25	
5	**111-01-196**	Tie Rod End Outer	48520 61G25	c:14.3 th:MM16X1.5R					

O.E.M. names and numbers are used for reference purposes only Ashika assumes no responsibility for possible errors

TERRANO II (R20) **02/1993 - 09/1997**

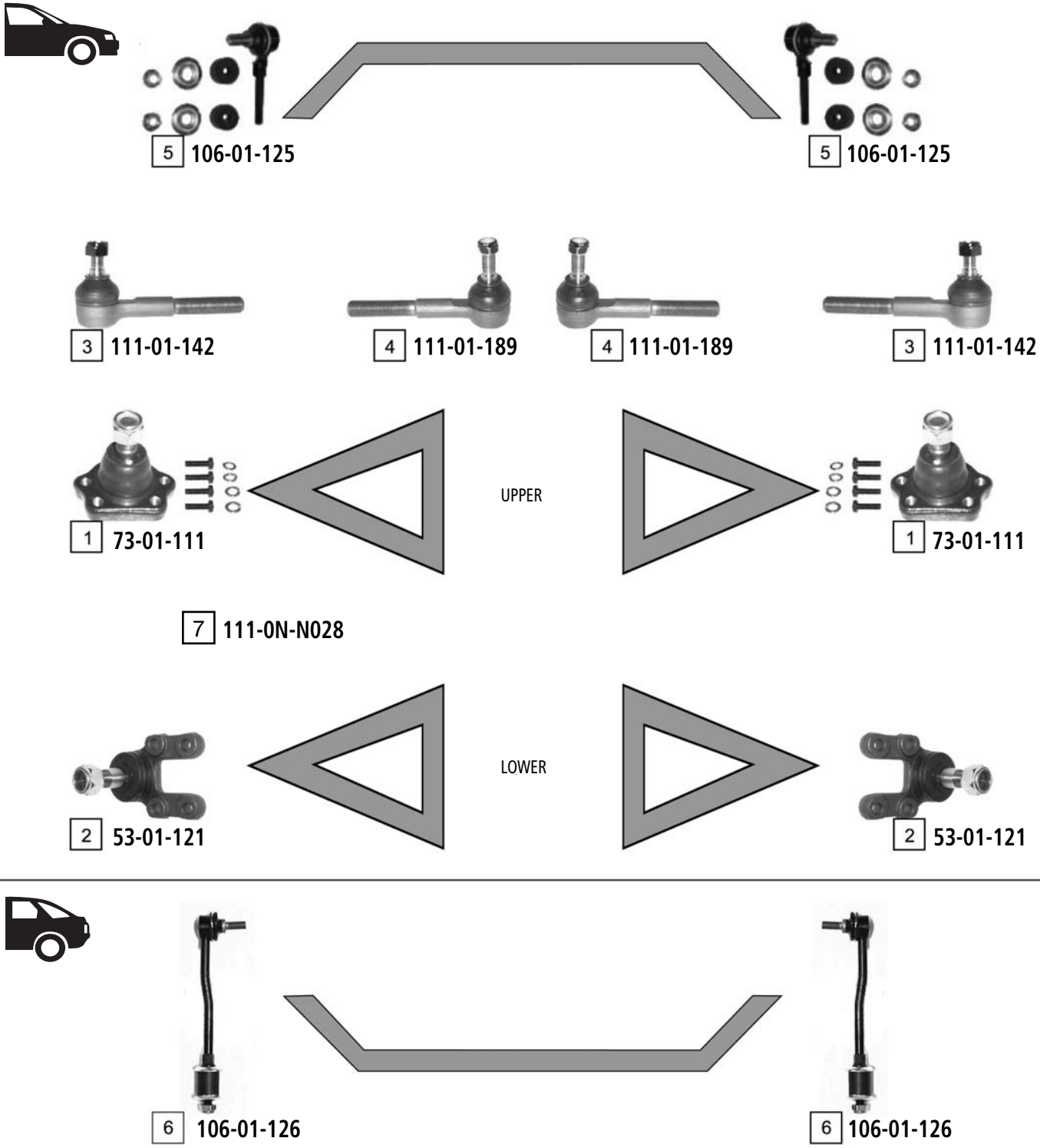

Ref	ASHIKA CODE	Description	OEM	Measures	Ref	ASHIKA CODE	Description	OEM	Measures
1	73-01-111	Ball Joint	40110 01G00	c:16.1	5	106-01-125	Stabiliser Link	54618 0F000	
2	53-01-121	Ball Joint Lower	40160 0F000	c:19.5	6	106-01-126	Stabiliser Link	56260 0F001	L:207
3	111-01-142	Tie Rod End Outer	48520 31G25	c:13.2 th:MM16X1.5R	7	111-0N-N028	Real Rod Steering	48560 0F000	
4	111-01-189	Tie Rod End Inner	48520 7F001	c:13.3 th:MM16X1.5L					

URVAN (E23) **07/1980 - 05/1987**

4 **111-01-120**

5 **111-01-119**

1 **73-01-111**

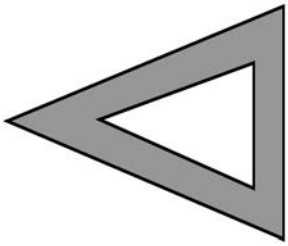

UPPER

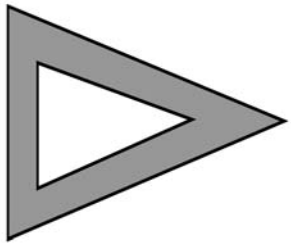

1 **73-01-111**

2 **53-01-198**

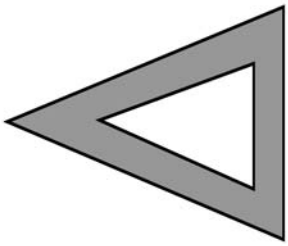

LOWER

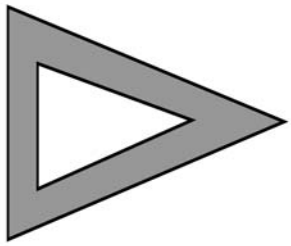

3 **53-01-199**

Ref	ASHIKA CODE	Description	OEM	Measures	Ref	ASHIKA CODE	Description	OEM	Measures
1	**73-01-111**	Ball Joint	40110 01G00	c:16.1	4	**111-01-120**	Tie Rod End	48571-T3025	
2	**53-01-198**	Ball Joint Left	40160-48W00	c:19.8	5	**111-01-119**	Tie Rod End	48561-T3025	
3	**53-01-199**	Ball Joint Right	40160-T3060	c:19.7					

O.E.M. names and numbers are used for reference purposes only Ashika assumes no responsibility for possible errors

URVAN (E24) **02/1987 - 05/1997**

-> 09/1988

4 **111-01-195**

5 **111-01-193**

5 **111-01-193**

4 **111-01-195**

10/1988 ->

6 **111-01-175** 3 **103-01-109**

3 **103-01-109** 6 **111-01-175**

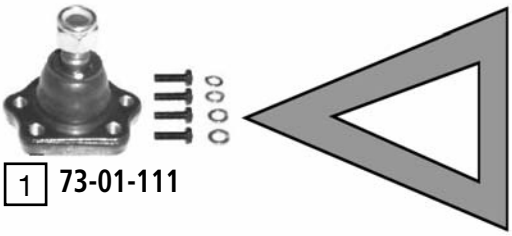

1 **73-01-111**

UPPER

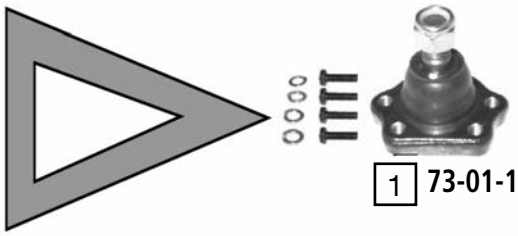

1 **73-01-111**

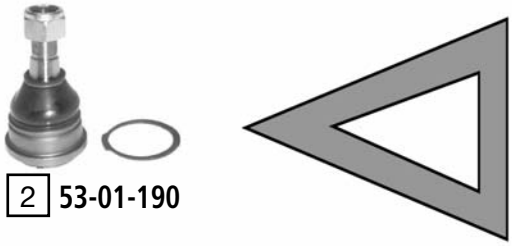

2 **53-01-190**

LOWER

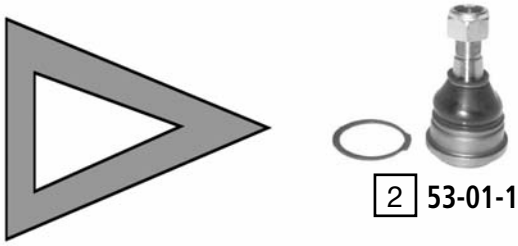

2 **53-01-190**

Ref	ASHIKA CODE	Description	OEM	Measures	Ref	ASHIKA CODE	Description	OEM	Measures
1	**73-01-111**	Ball Joint	40110 01G00	c:16.1	4	**111-01-195**	Tie Rod End	48640-01N25	c:16.2 th:FM16X1.5L
2	**53-01-190**	Ball Joint Lower	40160 01G25	c:19.5	5	**111-01-193**	Tie Rod End	48641.01N25	c:16.2 th:FM16X1.5R
3	**103-01-109**	Axial Joint	48521-27N00	th:MM16X1R L:290	6	**111-01-175**	Tie Rod End	48520-27N25	c:16.3 th:FM14X1.5R

VANETTE (C120) **07/1981 - 06/1987**

1 **111-01-102L**

3 **111-01-103R**

4 **111-01-103L**

2 **111-01-102R**

9 **105-01-110L**

10 **105-01-110R**

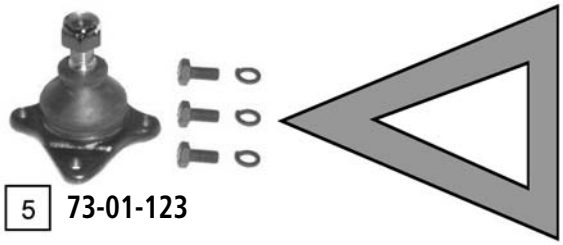

5 **73-01-123**

UPPER

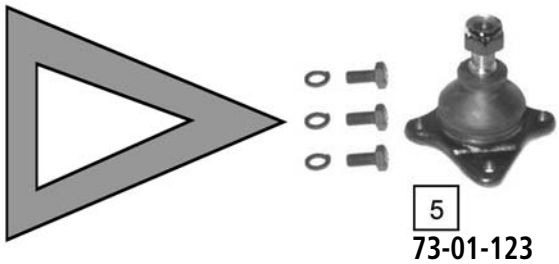

5 **73-01-123**

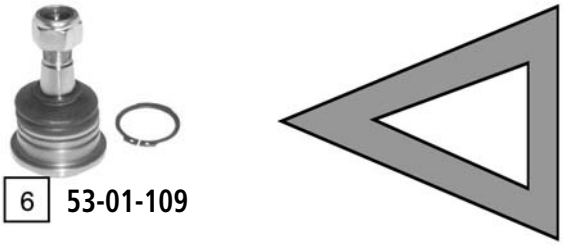

6 **53-01-109**

LOWER

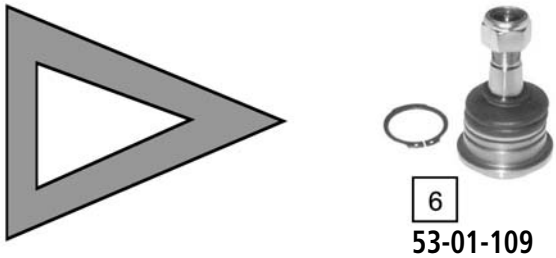

6 **53-01-109**

7 **105-01-100**

8 **105-01-101**

Ref	ASHIKA CODE	Description	OEM	Measures	Ref	ASHIKA CODE	Description	OEM	Measures
1	**111-01-102L**	Tie Rod End	48520U0100	c:13.3 th:FM14X1.5R	6	**53-01-109**	Ball Joint Lower	40160-G2500	c:19.5
2	**111-01-102R**	Tie Rod End	48520-G2525	c:13.3 th:FM14X1.5L	7	**105-01-100**	Pitman Arm		
3	**111-01-103R**	Tie Rod End	48641-G2525	c:13.4 th:FM14X1.5L	8	**105-01-101**	Pitman Arm	48530-Y9500	
4	**111-01-103L**	Tie Rod End	48521-G2525	c:13.4 th:FM14X1.5R	9	**105-01-110L**	Tie Rod End	48630-G2525	
5	**73-01-123**	Ball Joint	40110-G3700	c:13.5	10	**105-01-110R**	Tie Rod End	48510-G2525	

O.E.M. names and numbers are used for reference purposes only Ashika assumes no responsibility for possible errors

VANETTE (C22) 09/1985 - 12/1995

3 111-01-155L

5 111-01-156L

6 111-01-156R

4 111-01-155R

8 105-01-124L

9 105-01-124R

1 73-01-123

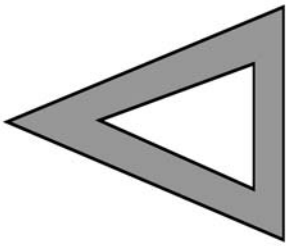

UPPER

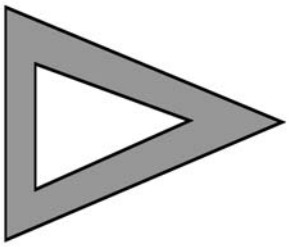

1 73-01-123

2 53-01-109

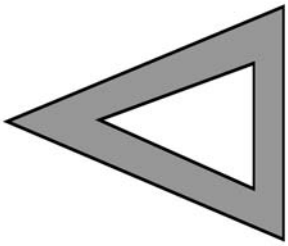

LOWER

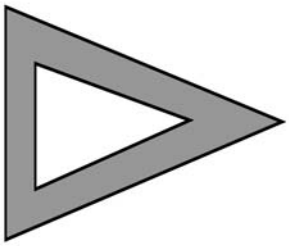

2 53-01-109

7 59-01-128

Ref	ASHIKA CODE	Description	OEM	Measures	Ref	ASHIKA CODE	Description	OEM	Measures
1	73-01-123	Ball Joint	40110-G3700	c:13.5	6	111-01-156R	Tie Rod End Inner Right	4016050W00	c:13.3 th:FM14X1.5R
2	53-01-109	Ball Joint Lower	40110-G3700	c:19.5	7	59-01-128	Pitman Arm	48530G5701	
3	111-01-155L	Tie Rod End Left	48520-G5101	c:13.3 th:FM14X1.5R	8	105-01-124L	Tie Rod End	48630G5101	
4	111-01-155R	Tie Rod End Right	48520-G5101	c:13.3 th:FM14X1.5L	9	105-01-124R	Tie Rod End	48510G5101	
5	111-01-156L	Tie Rod End Left	48521G5101	c:13.3 th:FM14X1.5L					

X-TRAIL (T30) **07/2001 - 05/2007**

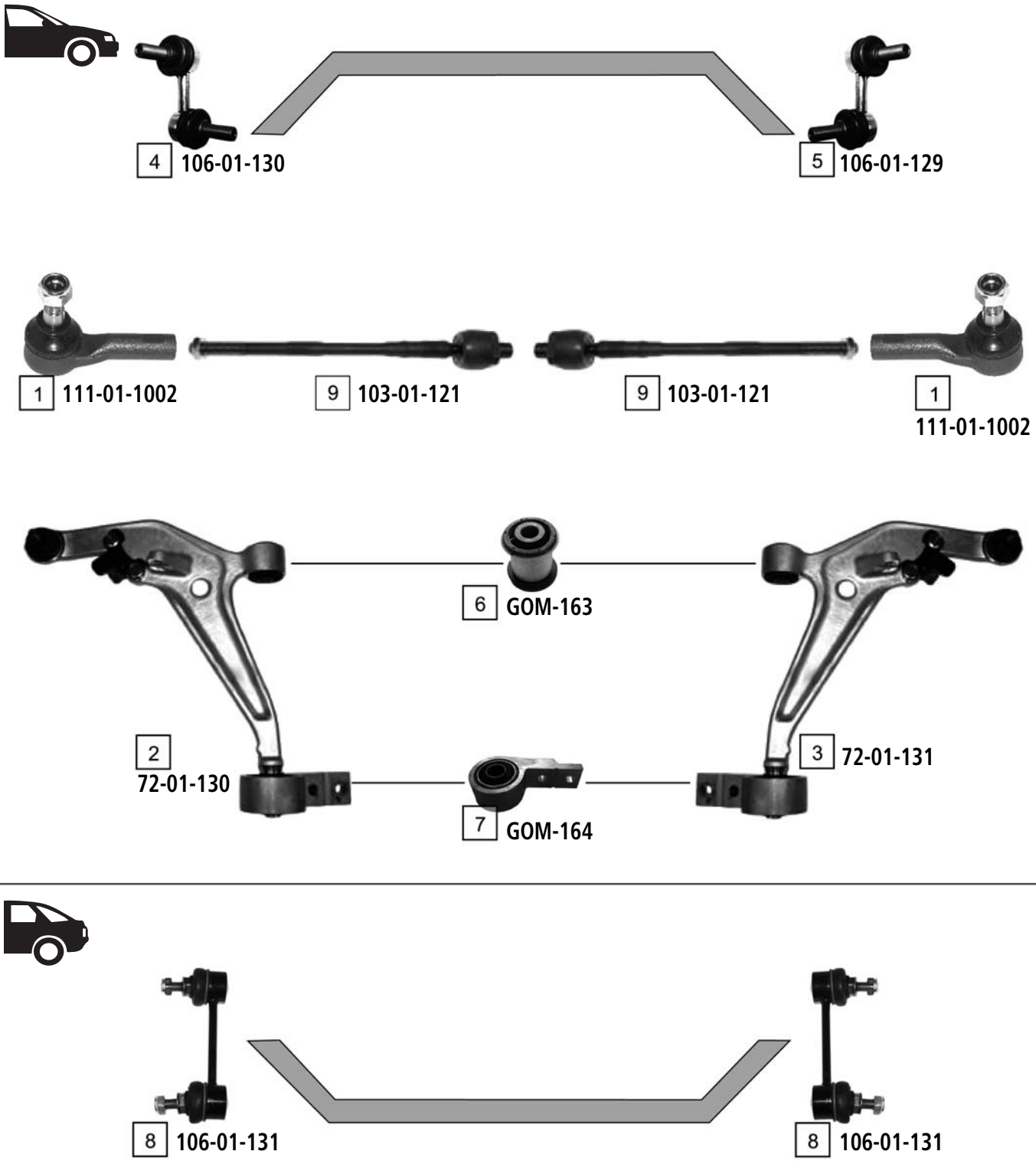

Ref	ASHIKA CODE	Description	OEM	Measures	Ref	ASHIKA CODE	Description	OEM	Measures
1	**111-01-1002**	Tie Rod End	48520-OP725	c:14.8 th:FM14X1.5R	6	**GOM-163**	Silentblock For Susp.Arm	Part of 72-01-130/72-01-131	
2	**72-01-130**	TCA Left	54501-8H310	c:15.4	7	**GOM-164**	Silentblock For Susp.Arm	Part of 72-01-130/72-01-131	
3	**72-01-131**	TCA Right	54500-8H310	c:15.2	8	**106-01-131**	Stabiliser Link	56261 EQ000	L:115
4	**106-01-130**	Stabiliser Link Left	54668-8H300	L:64	9	**103-01-121**	Axial Joint	48521 8H325	th: MM16X1R L:287
5	**106-01-129**	Stabiliser Link Right	54618-8H300	L:64					

O.E.M. names and numbers are used for reference purposes only Ashika assumes no responsibility for possible errors

CITY COUPE - CABRIO 07/1998 - 02/2002

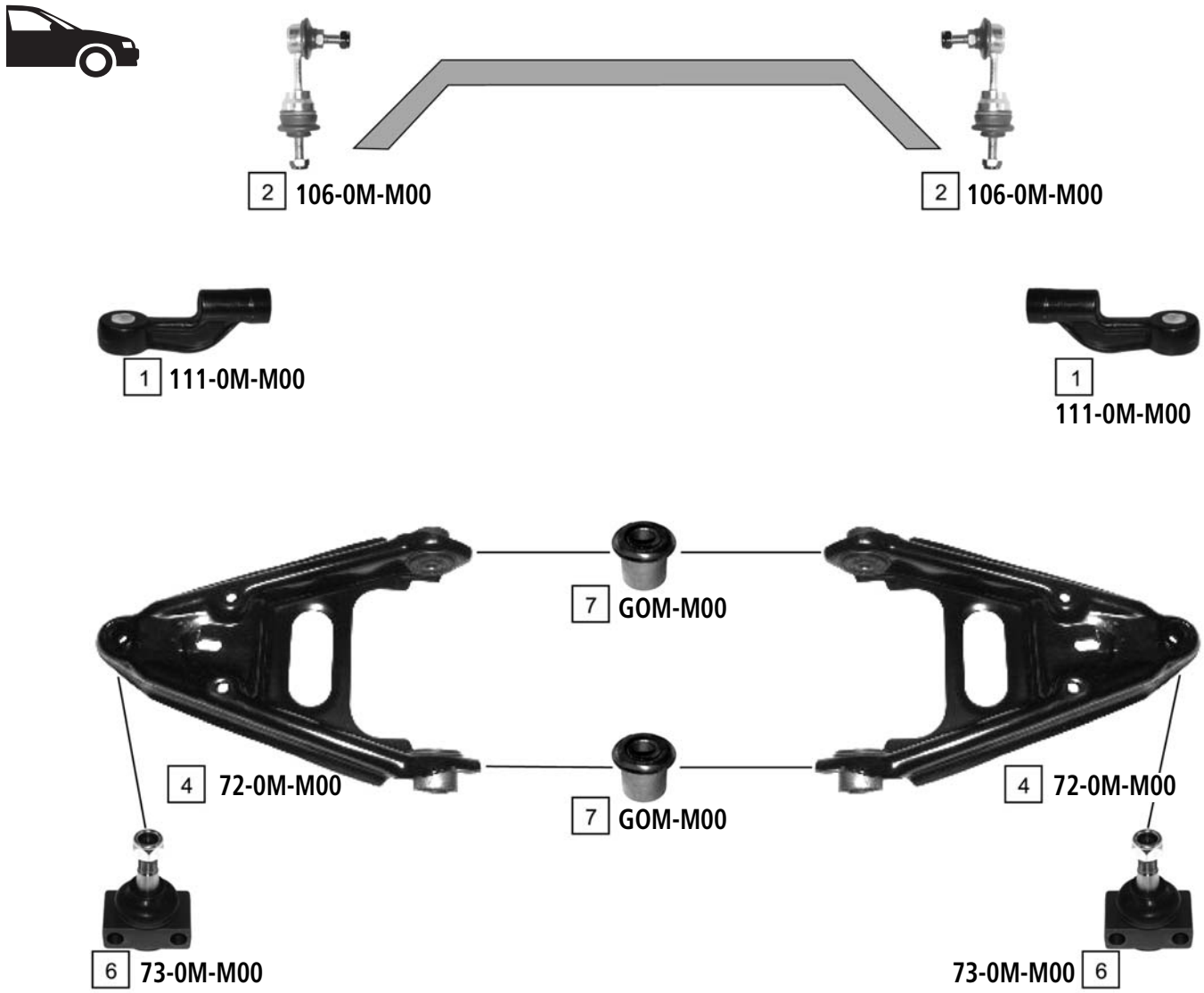

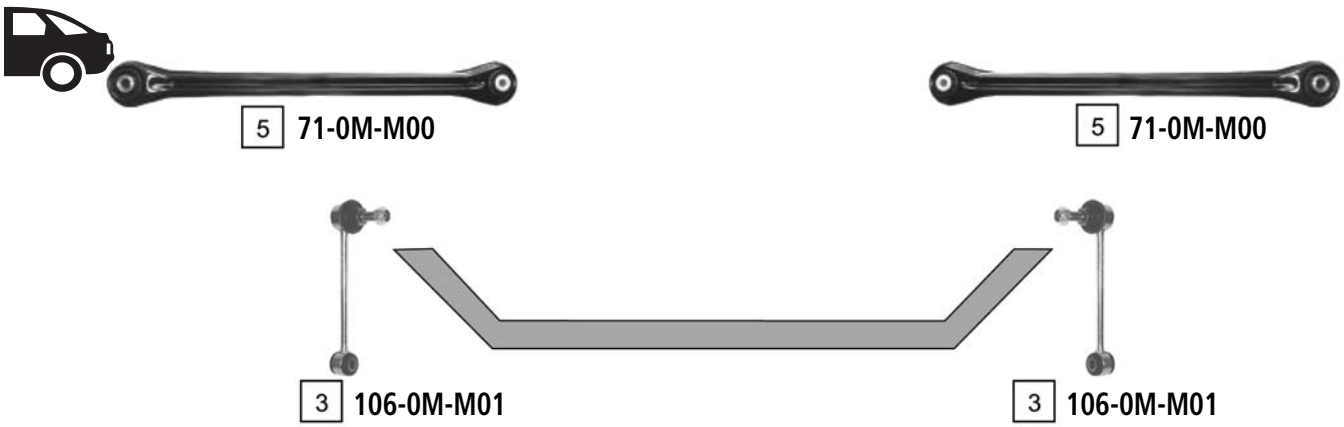

Ref	ASHIKA CODE	Description	OEM	Measures	Ref	ASHIKA CODE	Description	OEM	Measures
1	**111-0M-M00**	Tie Rod End	4887V002000000		5	**71-0M-M00**	Thrust Rod	1765V005000000	-
2	**106-0M-M00**	Stabiliser Link	5102V005000000	L:93	6	**73-0M-M00**	Ball Joint	2271V007000005	c:13
3	**106-0M-M01**	Stabiliser Link	1802V004000000	L:149	7	**GOM-M00**	Silentblock For Susp.Arm	Part of 72-0M-M00	d:39.2
4	**72-0M-M00**	TCA	07001V006000000						

FORFOUR (454) 04/2004 ->

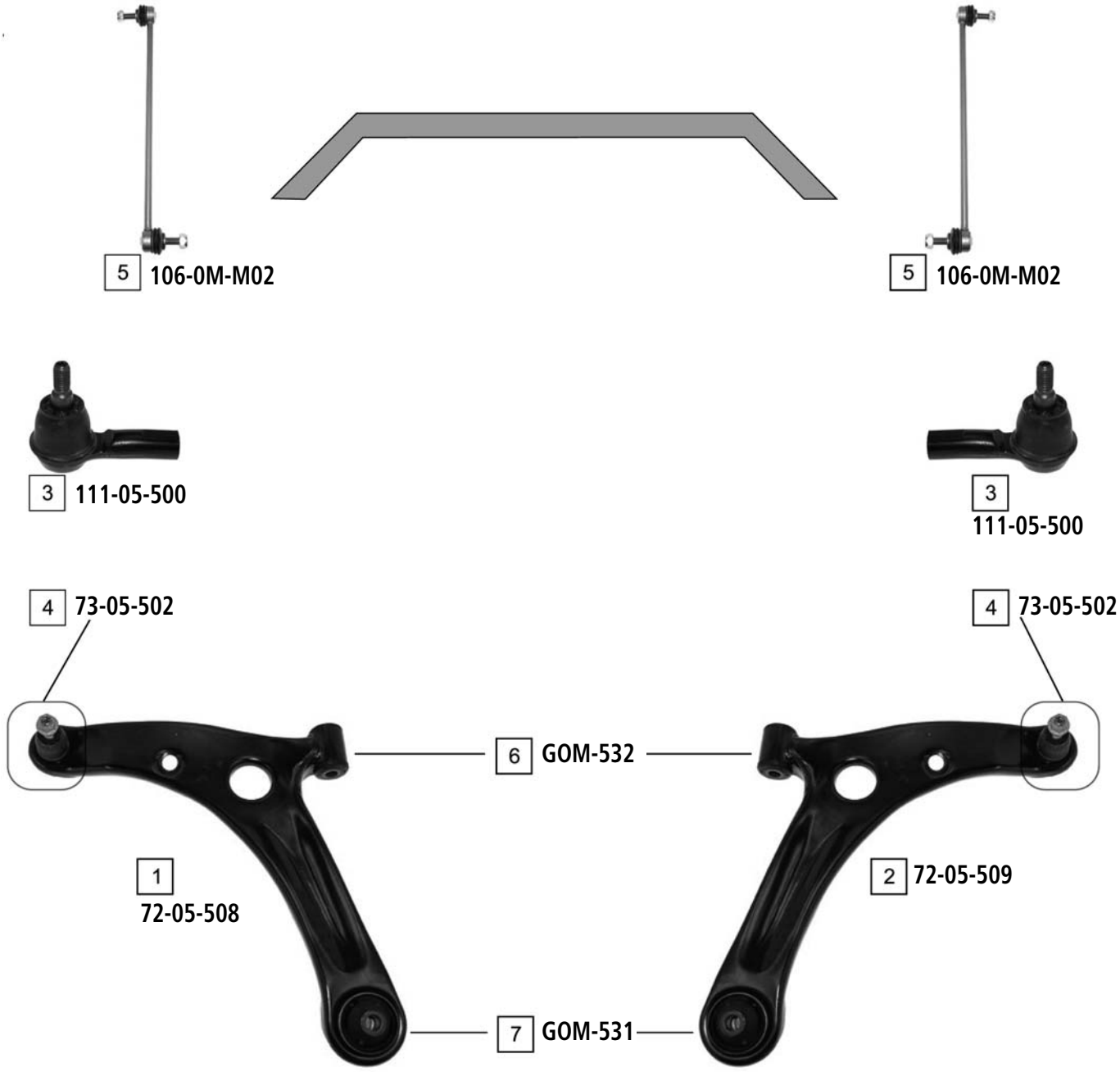

Ref	ASHIKA CODE	Description	OEM	Measures	Ref	ASHIKA CODE	Description	OEM	Measures
1	72-05-508	TCA Left Wbj	454 330 07 07		5	106-0M-M02	Stabiliser Link	454 320 00 10	
2	72-05-509	TCA Right Wbj	454 330 08 07		6	GOM-532	Silentblock For Susp.Arm	Part of 72-05-508/72-05-509	
3	111-05-500	Tie Rod End	454 460 02 05		7	GOM-531	Silentblock For Susp.Arm	Part of 72-05-508/72-05-509	
4	73-05-502	Ball Joint	Part of 72-05-508/72-05-509						

O.E.M. names and numbers are used for reference purposes only Ashika assumes no responsibility for possible errors

KORANDO (KJ) **01/1996 ->**

2 **106-0S-S01**

2 **106-0S-S01**

7 **111-0S-S02L** -> 12/1998

8 **111-0S-S31** -> 12/1998

9 **111-0S-S03R** -> 12/1998

1 **111-0S-S01** 1/1999 ->

5 **103-0S-S02**

5 **103-0S-S02**

1 **111-0S-S01** 1/1999 ->

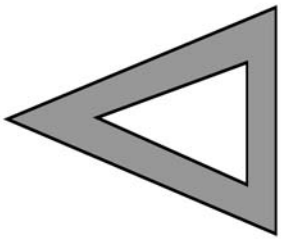

UPPER

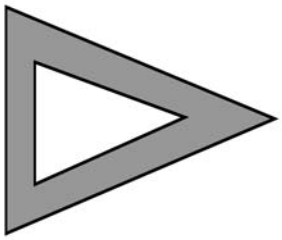

3 **73-0S-S01**

3 **73-0S-S01**

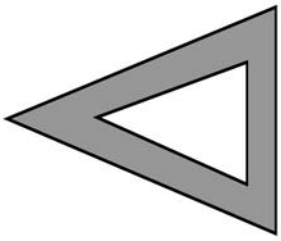

LOWER

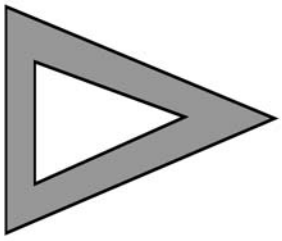

4 **73-0S-S02**

4 **73-0S-S02**

10 **101-0S-S04** ->POST.

12 **101-0S-S06** ->POST.

6 **52-0S-S01**

11 **101-0S-S05** ->POST.

13 **101-0S-S07** ->POST.

14 **101-0S-S09** ->LATO MONT. POST.

Ref	ASHIKA CODE	Description	OEM	Measures	Ref	ASHIKA CODE	Description	OEM	Measures
1	111-00-J01	Tie Rod End	4666005501	c:16 th:FM14X1.5R	8	111-0S-S31	Tie Rod End	46620-01000	
2	106-0S-S01	Stabiliser Link	4475005001		9	111-0S-S03R	Tie Rod End	46670-01010	
3	73-0S-S01	Ball Joint	4443003011	c:17.6	10	101-0S-S04	Upper Link	45401-05000	
4	73-0S-S02	Ball Joint	4450505001	c:17.6	11	101-0S-S05	Lower Link	45502-05004	
5	103-0S-S02	Axial Joint			12	101-0S-S06	Lower Link	45501-05302	
6	52-0S-S01	Pitman Arm	4644901051		13	101-0S-S07	Lower Link	45502-05102	
7	111-0S-S02L	Tie Rod End	46660-01010		14	101-0S-S09	Lower Link	45601-05000	

MUSSO (FJ) 01/1999 ->

2 106-0S-S04

2 106-0S-S04

1 111-0S-S01

5 103-0S-S02

5 103-0S-S02

1 111-0S-S01

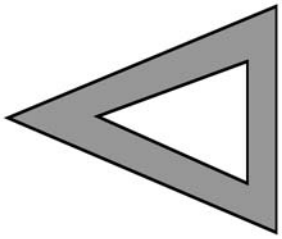

UPPER

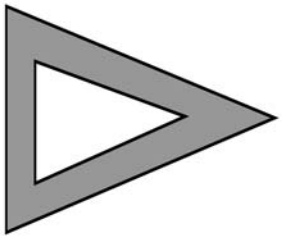

3 73-0S-S01

3 73-0S-S01

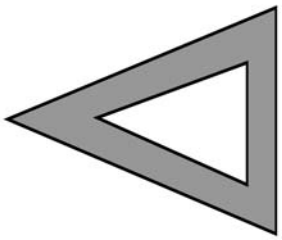

LOWER

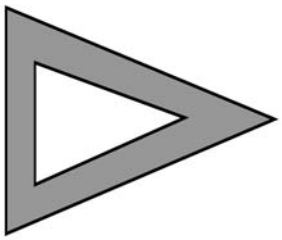

4 73-0S-S02

4 73-0S-S02

10 101-0S-S04 ->POST.

11 101-0S-S05 ->POST.

12 101-0S-S06 ->POST.

13 101-0S-S07 ->POST.

14 101-0S-S09 ->LATO MONT. POST.

Ref	ASHIKA CODE	Description	OEM	Measures	Ref	ASHIKA CODE	Description	OEM	Measures
1	111-0S-S01	Tie Rod End	4666005501	c:16 th:FM14X1.5R	6	101-0S-S04	Upper Link	45401-05000	
2	106-0S-S04	Stabiliser Link	4475005001		7	101-0S-S05	Lower Link	45502-05004	
3	73-0S-S01	Ball Joint	4443003011	c:17.6	8	101-0S-S06	Lower Link	45501-05302	
4	73-0S-S02	Ball Joint	4450505001	c:17.6	9	101-0S-S07	Lower Link	45502-05102	
5	103-0S-S02	Axial Joint	Part of		10	101-0S-S09	Lower Link	45601-05000	

O.E.M. names and numbers are used for reference purposes only Ashika assumes no responsibility for possible errors

REXTON **2002 ->**

1 **106-0S-S02**

2 **106-0S-S03**

3 **111-0S-S04**

4 **111-0S-S05**

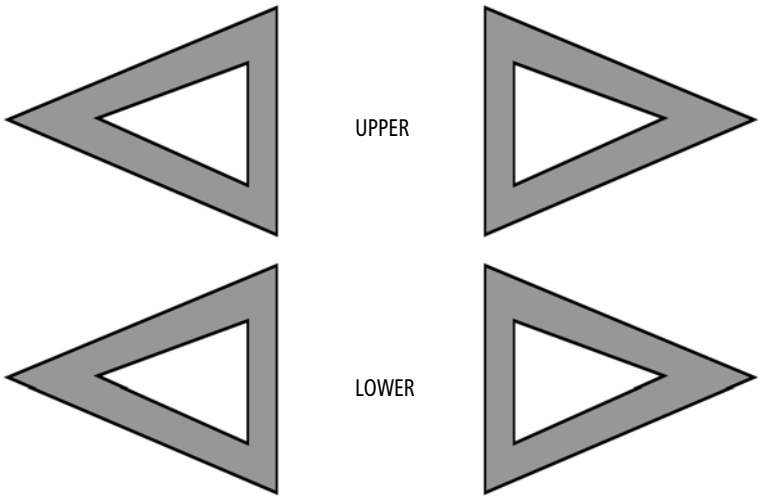

5 **72-0S-S02**

6 **72-0S-S01**

7 **72-0S-S04**

8 **72-0S-S03**

Ref	ASHIKA CODE	Description	OEM	Measures	Ref	ASHIKA CODE	Description	OEM	Measures
1	**106-0S-S02**	Stabiliser Link	4475008001		5	**72-0S-S02**	TCA Left	4440108000	
2	**106-0S-S03**	Stabiliser Link	4475508000		6	**72-0S-S01**	TCA Right	4440208000	
3	**111-0S-S04**	Tie Rod End	4666008001		7	**72-0S-S04**	TCA Left	4450108005	
4	**111-0S-S05**	Tie Rod End	4666008011		8	**72-0S-S03**	TCA Right	4450208005	

1800 XT COUPÈ **11/1984 - 12/1990**

MS

2 **111-07-703L**

3 **103-07-734**

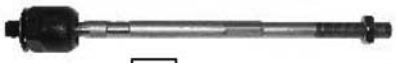

3 **103-07-734**

1 **111-07-703R**

PS

2 **111-07-703L**

4 **103-07-706**

4 **103-07-706**

1 **111-07-703R**

5 **73-07-798**

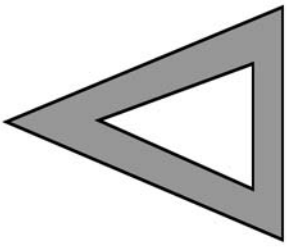

LOWER

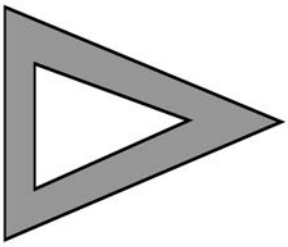

5 **73-07-798**

Ref	ASHIKA CODE	Description	OEM	Measures	Ref	ASHIKA CODE	Description	OEM	Measures
1	**111-07-703R**	Tie Rod End Left	31320-GA111	c:12.3 th:FM14X1.5R	4	**103-07-706**	Axial Joint	31310-GA151	th:MM14X1.5R L:280
2	**111-07-703L**	Tie Rod End Right	31320-GA101	c:12.3 th:FM14X1.5R	5	**73-07-798**	Ball Joint Lower	721067003	c:13.8
3	**103-07-734**	Axial Joint	31310-GA170						

O.E.M. names and numbers are used for reference purposes only Ashika assumes no responsibility for possible errors

FORESTER (SF) **01/1997 - 05/2002**

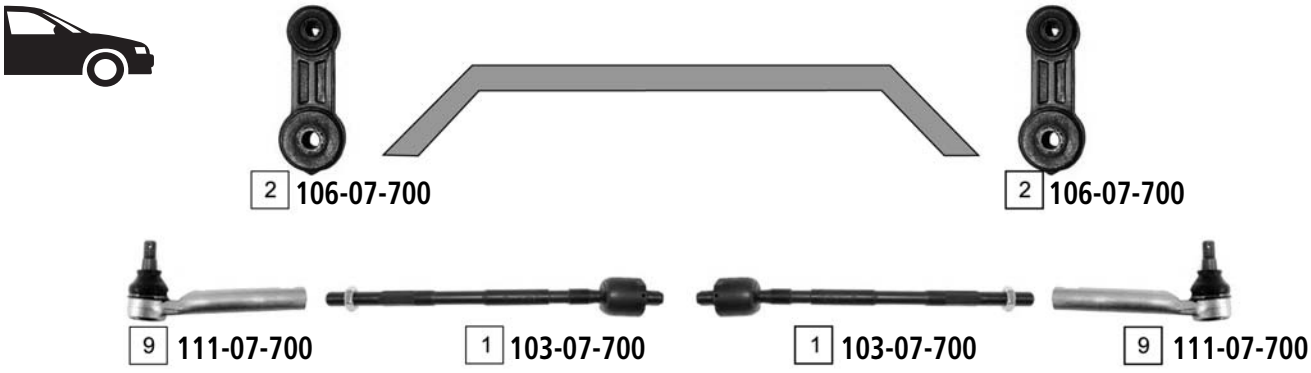

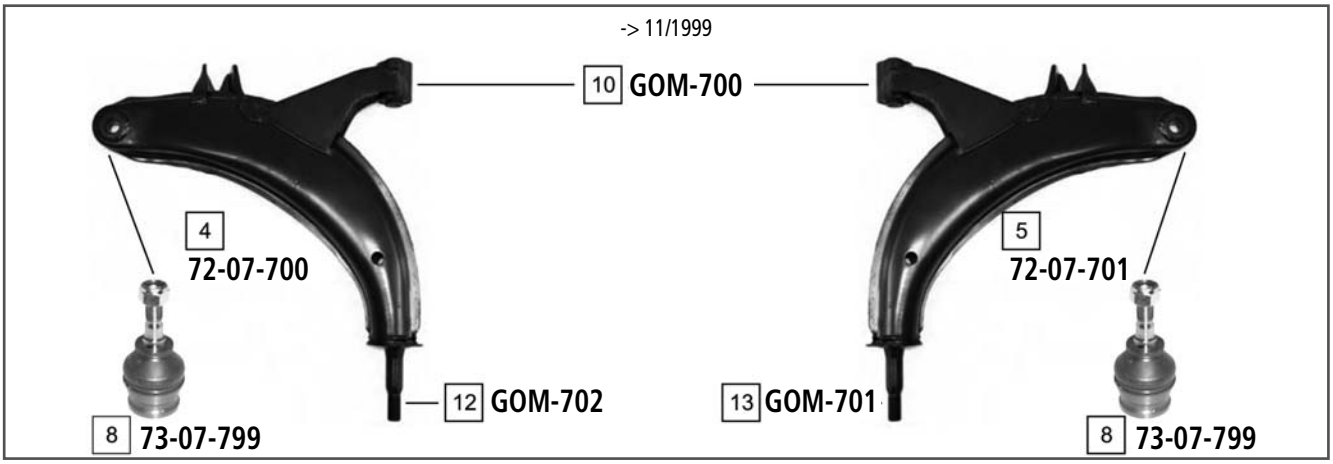

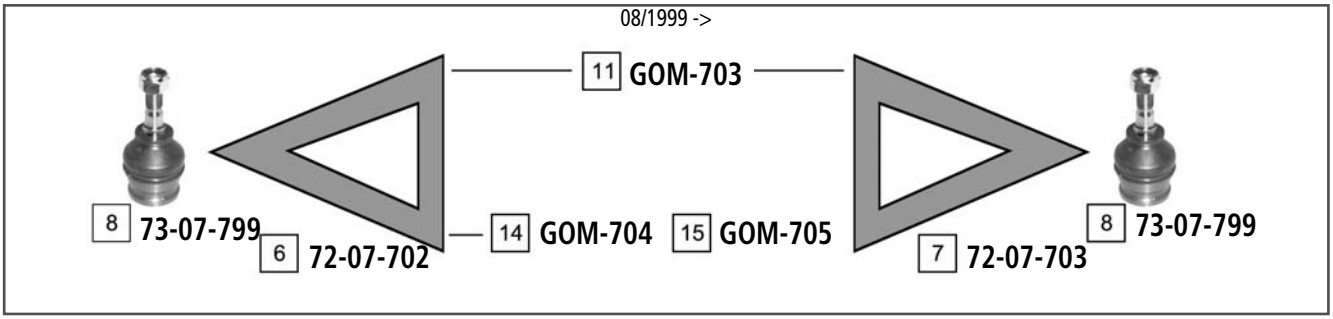

Ref	ASHIKA CODE	Description	OEM	Measures	Ref	ASHIKA CODE	Description	OEM	Measures
1	103-07-700	Axial Joint	34140 FC000	th:MM14X1.5R L:292	9	111-07-700	Tie Rod End	34141 AA 041	
2	106-07-700	Stabiliser Link	20420 AA003		10	GOM-700	Silentblock For Susp.Arm	20201 AA000	
3	106-07-701	Stabiliser Link	20481 AA001		11	GOM-703	Silentblock For Susp.Arm	20201 FC020	
4	72-07-700	TCA Left	20200 AA210		12	GOM-702	Silentblock For Susp.Arm	20201 AC110	
5	72-07-701	TCA Right	200200 AC200F		13	GOM-701	Silentblock For Susp.Arm	20201 AC100	
6	72-07-702	TCA Left	20200 FC130		14	GOM-704	Silentblock For Susp.Arm	20201 FC110	
7	72-07-703	TCA Right	20200 FC120		15	GOM-705	Silentblock For Susp.Arm	20201 FC100	
8	73-07-799	Ball Joint Lower	21067 GA050	c:15.7					

FORESTER (SG) **02/2002 ->**

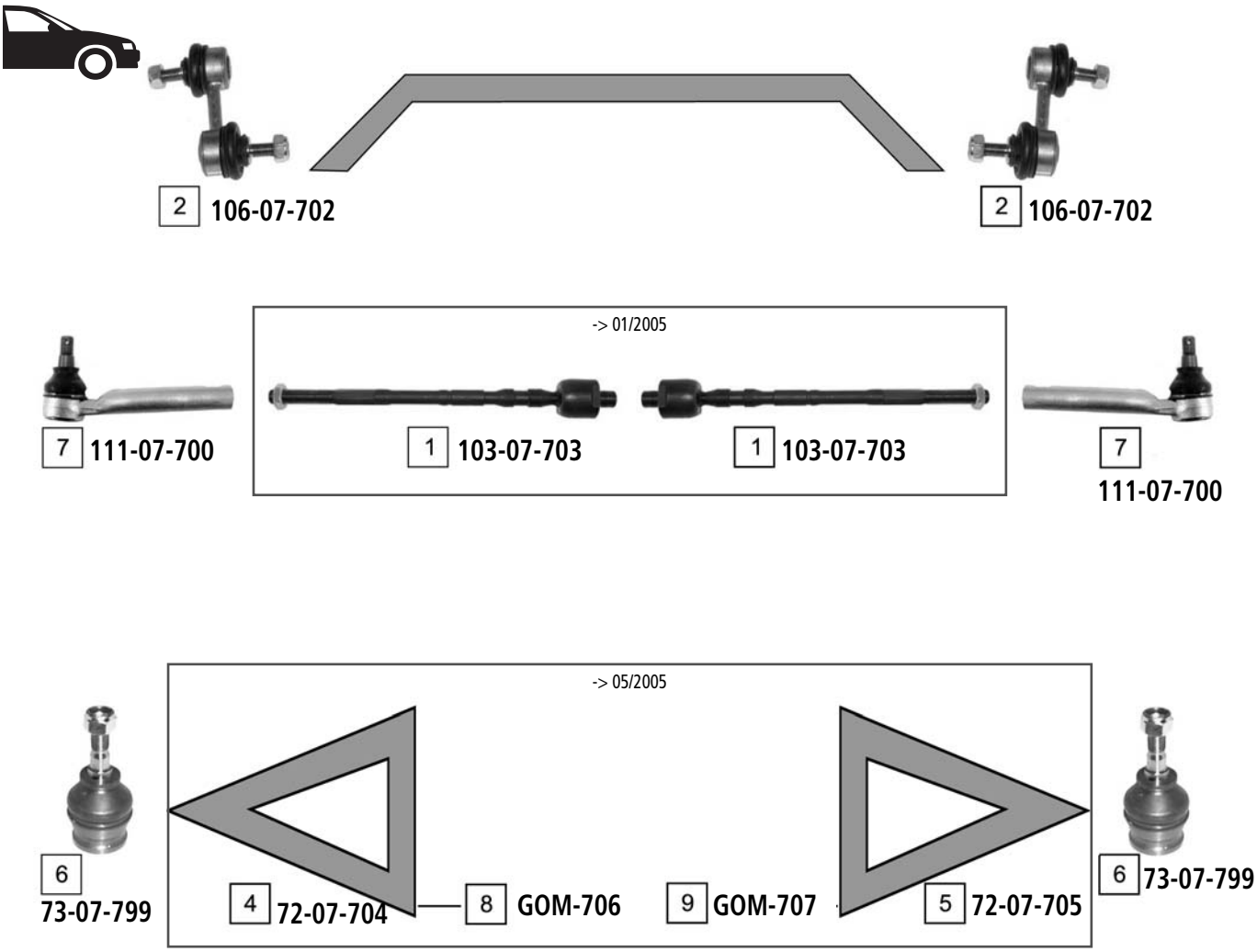

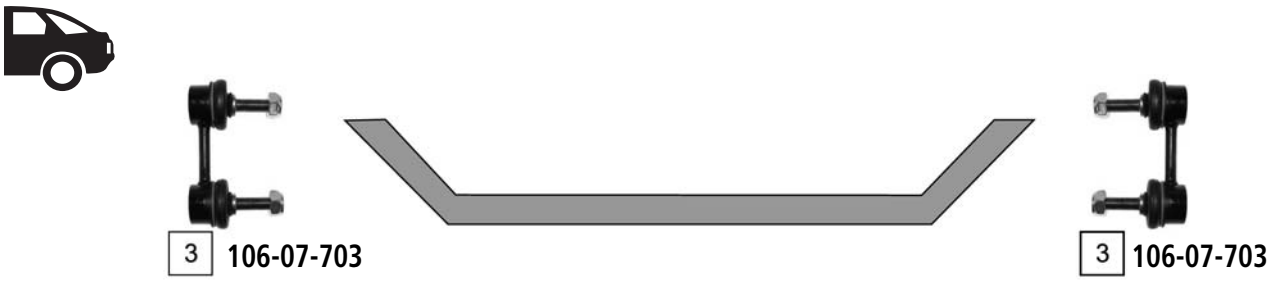

Ref	ASHIKA CODE	Description	OEM	Measures	Ref	ASHIKA CODE	Description	OEM	Measures
1	**103-07-703**	Axial Joint	34160 AE000	th:MM16X1.5R L:302	6	**73-07-799**	Ball Joint Lower	21067 GA050	c:15.7
2	**106-07-702**	Stabiliser Link	20470 SA000		7	**111-07-700**	Tie Rod End	34141 AA 041	
3	**106-07-703**	Stabiliser Link	20470 SA010	L:70	8	**GOM-706**	Silentblock For Susp.Arm	20201 FC130	
4	**72-07-704**	TCA Left	20202 SA010		9	**GOM-707**	Silentblock For Susp.Arm	20201 FC120	
5	**72-07-705**	TCA Right	20202 SA000						

O.E.M. names and numbers are used for reference purposes only Ashika assumes no responsibility for possible errors

IMPREZA (GC-GF) **08/1992 - 12/2000**

-> 12/1993

5 **111-07-704L**

6 **111-07-704R**

12/1993 ->

7 **111-07-700**

1 **103-07-704**

1 **103-07-704**

7 **111-07-700**

Ref	ASHIKA CODE	Description	OEM	Measures	Ref	ASHIKA CODE	Description	OEM	Measures
1	**103-07-704**	Axial Joint	34140-AA040	th:MM14x1.5R L:292	6	**111-07-704R**	Tie Rod End Right	31320-GA190	
2	**72-07-700**	TCA Left	20200 AA210		7	**111-07-700**	Tie Rod End	34141 AA 041	
3	**72-07-701**	TCA Right	200200 AC200F		8	**GOM-700**	Silentblock For Susp.Arm	20201 AA000	
4	**73-07-799**	Ball Joint Lower	21067 GA050	c:15.7	9	**GOM-702**	Silentblock For Susp.Arm	20201 AC110	
5	**111-07-704L**	Tie Rod End Left	31320-GA200		10	**GOM-701**	Silentblock For Susp.Arm	20201 AC100	

IMPREZA (GD-GG) **12/2000 ->**

2 **111-07-700**

1 **103-07-704**

1 **103-07-704**

2 **111-07-700**

Ref	ASHIKA CODE	Description	OEM	Measures	Ref	ASHIKA CODE	Description	OEM	Measures
1	**103-07-704**	Axial Joint	34140-AA040	th:MM14X1.5R L:292	2	**111-07-700**	Tie Rod End	34141 AA 041	

O.E.M. names and numbers are used for reference purposes only Ashika assumes no responsibility for possible errors

JUSTY (KAD-JMA) **11/1984 - 09/2003**

3 **111-07-705**

4 **103-07-707**

4 **103-07-707**

3 **111-07-705**

1987 - 1994

1 **71-07-700**

2 **71-07-701**

5 **73-07-704**

5 **73-07-704**

Ref	ASHIKA CODE	Description	OEM	Measures	Ref	ASHIKA CODE	Description	OEM	Measures
1	**71-07-700**	TCA Left	7210-60530		4	**103-07-707**	Axial Joint	7313-10140	th:MM14X1.5R L:222
2	**71-07-701**	TCA Right	7210-60520	c:15	5	**73-07-704**	Ball Joint	7210-67021	c:13
3	**111-07-705**	Tie Rod End	7313-20020	c:11.5 th:FM12X1.5R					

LEGACY I (BC) **01/1989 - 08/1994**

4 111-07-704L

5 111-07-704R

Ref	ASHIKA CODE	Description	OEM	Measures	Ref	ASHIKA CODE	Description	OEM	Measures
1	72-07-700	TCA Left	20200 AA210		5	111-07-704R	Tie Rod End Right	31320-GA190	
2	72-07-701	TCA Right	200200 AC200F		6	GOM-702	Silentblock For Susp.Arm	20201 AC110	
3	73-07-799	Ball Joint Lower	21067 GA050	c:15.7	7	GOM-701	Silentblock For Susp.Arm	20201 AC100	
4	111-07-704L	Tie Rod End Left	31320-GA200		8	GOM-700	Silentblock For Susp.Arm	20201 AA000	

O.E.M. names and numbers are used for reference purposes only Ashika assumes no responsibility for possible errors

LEGACY II (BD-BG) **01/1994 - 03/1999**

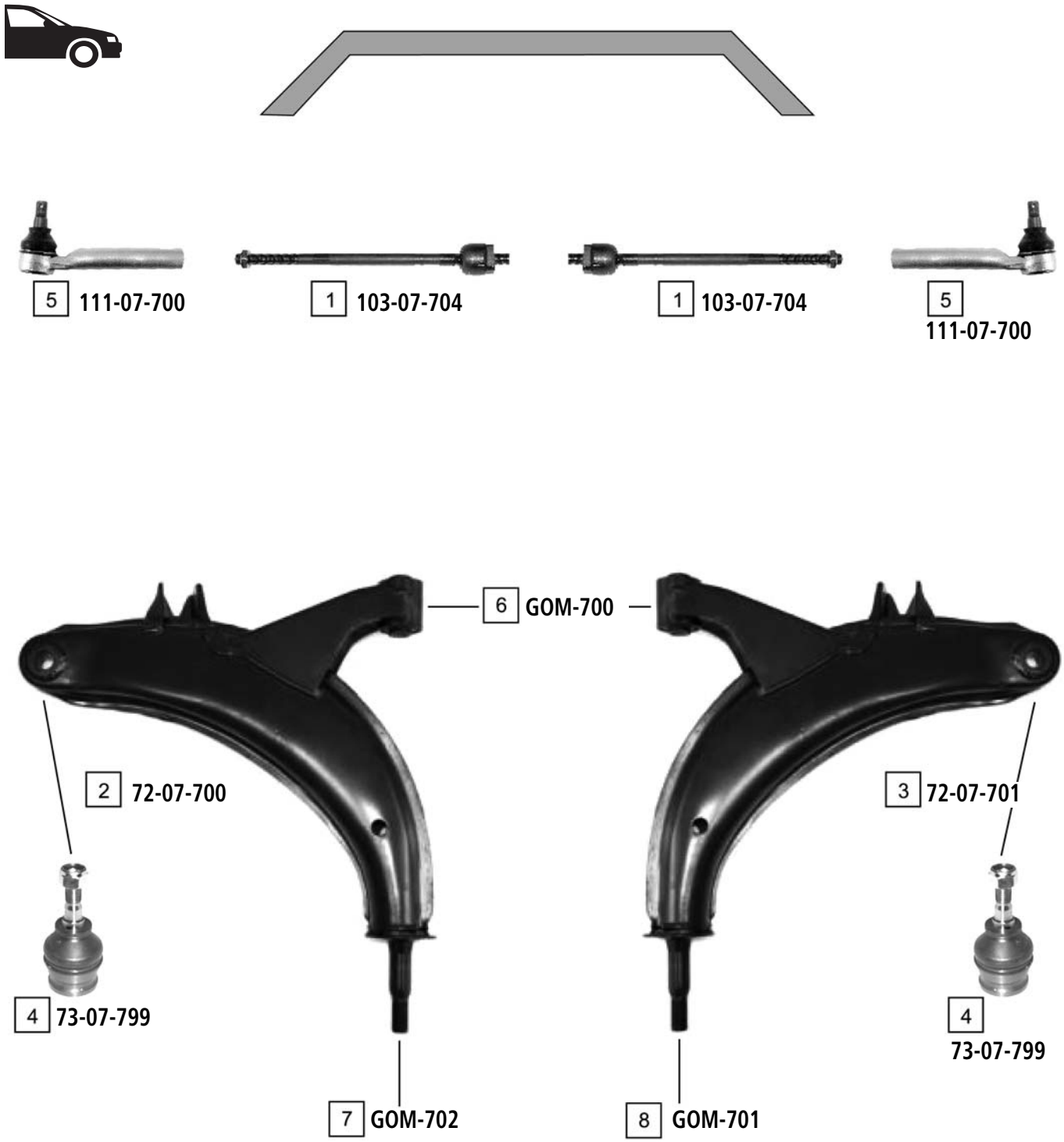

Ref	ASHIKA CODE	Description	OEM	Measures	Ref	ASHIKA CODE	Description	OEM	Measures
1	**103-07-704**	Axial Joint	34140-AA040	th:MM14X1.5R L:292	5	**111-07-700**	Tie Rod End	34141 AA 041	
2	**72-07-700**	TCA Left	20200 AA210		6	**GOM-700**	Silentblock For Susp.Arm	20201 AA000	
3	**72-07-701**	TCA Right	200200 AC200F		7	**GOM-702**	Silentblock For Susp.Arm	20201 AC110	
4	**73-07-799**	Ball Joint Lower	21067 GA050	c:15.7	8	**GOM-701**	Silentblock For Susp.Arm	20201 AC100	

LEGACY III (BE-BH) **04/1999 - 08/2003**

3 **111-07-700**

1 **103-07-705**

1 **103-07-705**

3 **111-07-700**

2 **73-07-799**

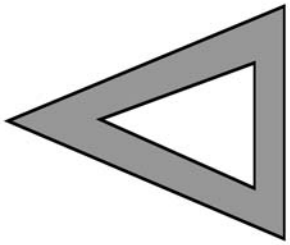

LOWER

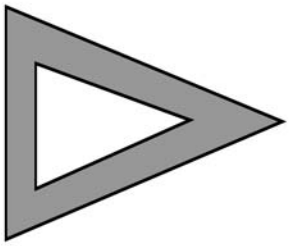

2 **73-07-799**

Ref	ASHIKA CODE	Description	OEM	Measures	Ref	ASHIKA CODE	Description	OEM	Measures
1	**103-07-705**	Axial Joint	31310-GA152	th:MM14X1.5R L:292	3	**111-07-700**	Tie Rod End	34141 AA 041	
2	**73-07-799**	Ball Joint Lower	21067 GA050	c:15.7					

O.E.M. names and numbers are used for reference purposes only Ashika assumes no responsibility for possible errors

LEONE II **11/1984 - 02/1992**

MS

2 **111-07-703L**

3 **103-07-734**

3 **103-07-734**

1 **111-07-703R**

PS

2 **111-07-703L**

4 **103-07-706**

4 **103-07-706**

1 **111-07-703R**

5 **73-07-798**

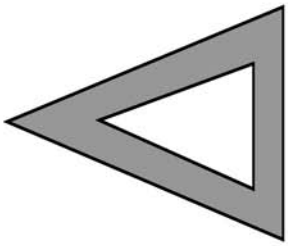

LOWER

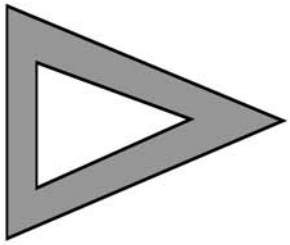

5 **73-07-798**

Ref	ASHIKA CODE	Description	OEM	Measures	Ref	ASHIKA CODE	Description	OEM	Measures
1	**111-07-703R**	Tie Rod End Left	31320-GA111	c:12.3 th:FM14X1.5R	4	**103-07-706**	Axial Joint	31310-GA151	th:MM14X1.5R L:280
2	**111-07-703L**	Tie Rod End Right	31320-GA101	c:12.3 th:FM14X1.5R	5	**73-07-798**	Ball Joint Lower	721067003	c:13.8
3	**103-07-734**	Axial Joint	31310-GA170						

LIBERO (E10-E12) **01/1983 - 02/2000**

1 **73-07-704**

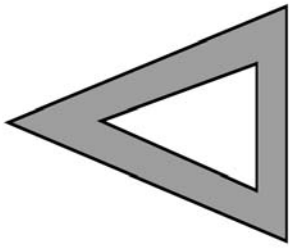

LOWER

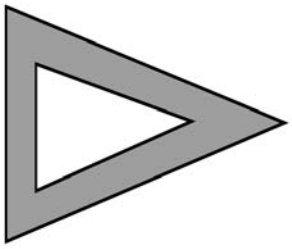

1
73-07-704

Ref	ASHIKA CODE	Description	OEM	Measures	Ref	ASHIKA CODE	Description	OEM	Measures
1	73-07-704	Ball Joint	7210-67021	c:13					

O.E.M. names and numbers are used for reference purposes only Ashika assumes no responsibility for possible errors

ALTO I (SS80) **06/1982 - 12/1985**

09/1984 ->

1 111-08-804 2 103-08-803 2 103-08-803 1 111-08-804

4 GOM-C07

3 71-08-803 3 71-08-803

Ref	ASHIKA CODE	Description	OEM	Measures	Ref	ASHIKA CODE	Description	OEM	Measures
1	**111-08-804**	Tie Rod End	48810 78000	c:12.8 th:MM12X1.25	3	**71-08-803**	TCA	45200 69DV1	c:15
2	**103-08-803**	Axial Joint	48830-84000		4	**GOM-C07**	Silentblock For Susp.Arm	45261 77A10	d:27.5

SUZUKI
ALTO

ALTO II (EC) 01/1986 - 11/1993
ALTO III (EF,SH410) 04/1994 - 06/2002

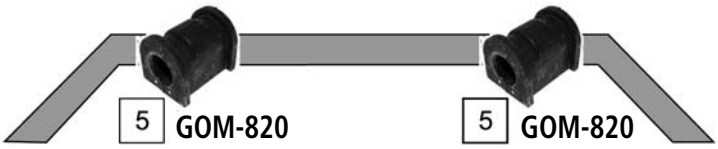

1 111-08-812 2 103-08-803 2 103-08-803 1 111-08-812

4 GOM-C07

3 71-08-803 3 71-08-803

Ref	ASHIKA CODE	Description	OEM	Measures	Ref	ASHIKA CODE	Description	OEM	Measures
1	**111-08-812**	Tie Rod End	48810 84000	c:12.7 th:MM12X1.25	4	**GOM-C07**	Silentblock For Susp.Arm	45261 77A10	d:27.5
2	**103-08-803**	Axial Joint	48830-84000		5	**GOM-820**	Stabiliser Mountig	42431 70B42	d:21.5
3	**71-08-803**	TCA	45200 69DV1	c:15					

O.E.M. names and numbers are used for reference purposes only Ashika assumes no responsibility for possible errors

ALTO IV (RF410) 03/2002 - 02/2007

2 111-08-812

1 103-08-800

1 103-08-800

2 111-08-812

5 GOM-821

5 GOM-821

3 71-08-800

4 GOM-C07

3 71-08-800

Ref	ASHIKA CODE	Description	OEM	Measures	Ref	ASHIKA CODE	Description	OEM	Measures
1	**103-08-800**	Axial Joint	48830 M70F00	th:FM14X1.5R L:236	4	**GOM-C07**	Silentblock For Susp.Arm	45261 77A10	d:27.5
2	**111-08-812**	Tie Rod End	48810 84000	c:12.7 th:MM12X1.25	5	**GOM-821**	Silentblock For Susp.Arm	42451 M76G00	
3	**71-08-800**	TCA	45200 M79F00	c:15					

BALENO (SY) **07/1995 - 11/2002**

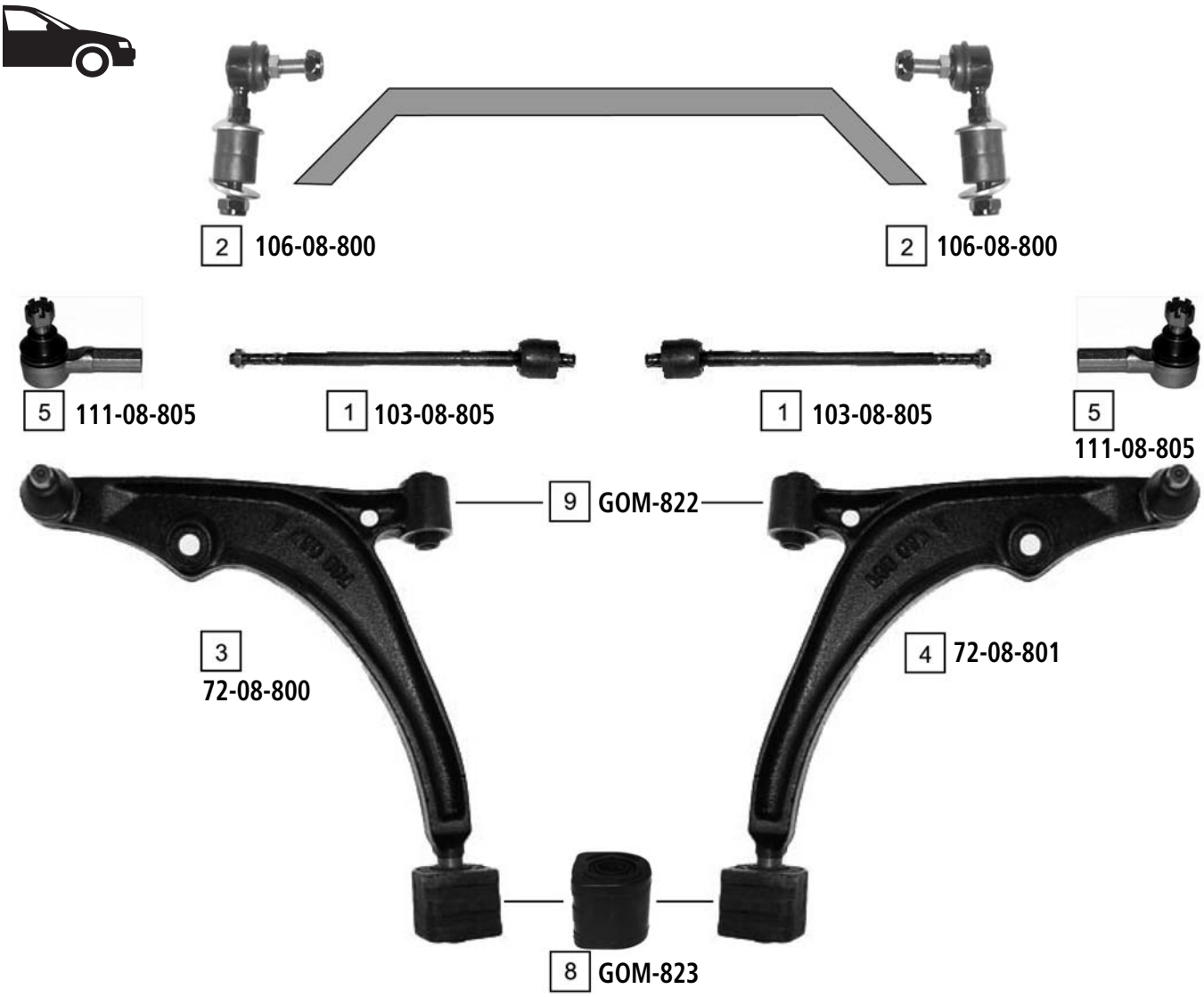

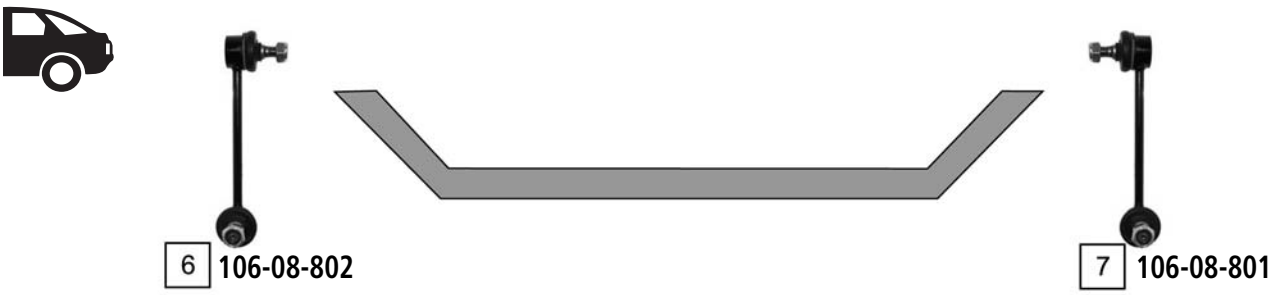

Ref	ASHIKA CODE	Description	OEM	Measures	Ref	ASHIKA CODE	Description	OEM	Measures
1	**103-08-805**	Axial Joint	48830-60G00	th:MM14X1.5R L:307	6	**106-08-802**	Stabiliser Link Left	46640 80F00	L:178
2	**106-08-800**	Stabiliser Link	46630 60B01		7	**106-08-801**	Stabiliser Link Right	46630 80F00	L:178
3	**72-08-800**	TCA	45202-63G01	c:16.5	8	**GOM-823**	Silentblock For Susp.Arm	46420 60B02	
4	**72-08-801**	TCA	45201-63G01	C:16.5	9	**GOM-822**	Silentblock For Susp.Arm	45500 50800	
5	**111-08-805**	Tie Rod End	48810 76G00	c:12.7 th:FM12X1.25					

O.E.M. names and numbers are used for reference purposes only Ashika assumes no responsibility for possible errors

CARRY (ST90V) **11/1980 - 10/1985**

2 **111-08-803L**

3 **111-08-803R**

2 **111-08-803L**

3 **111-08-803R**

1 **71-08-802**

4 **73-08-801**
-> 02/1981

1 **71-08-802**

4 **73-08-801**
-> 02/1981

Ref	ASHIKA CODE	Description	OEM	Measures	Ref	ASHIKA CODE	Description	OEM	Measures
1	**71-08-802**	TCA Lower	45200-79001		3	**111-08-803R**	Tie Rod End	48810 79000	c:12.7 th:MM14X1.5R
2	**111-08-803L**	Tie Rod End	48820-79000	c:12.5 th:MM14X1.5L	4	**73-08-801**	Ball Joint		

CARRY (ED) 10/1985 - 03/1999

2 111-08-803L

3 111-08-803R

2 111-08-803L

3
111-08-803R

-> 1991

1 71-08-805

1 71-08-805

Ref	ASHIKA CODE	Description	OEM	Measures	Ref	ASHIKA CODE	Description	OEM	Measures
1	**71-08-805**	TCA Lower	45200-85001		3	**111-08-803R**	Tie Rod End	48810 79000	c:12.7 th:MM14X1.5R
2	**111-08-803L**	Tie Rod End	48820-79000	c:12.5 th:MM14X1.5L					

O.E.M. names and numbers are used for reference purposes only Ashika assumes no responsibility for possible errors

CARRY (FD) 03/1999 ->

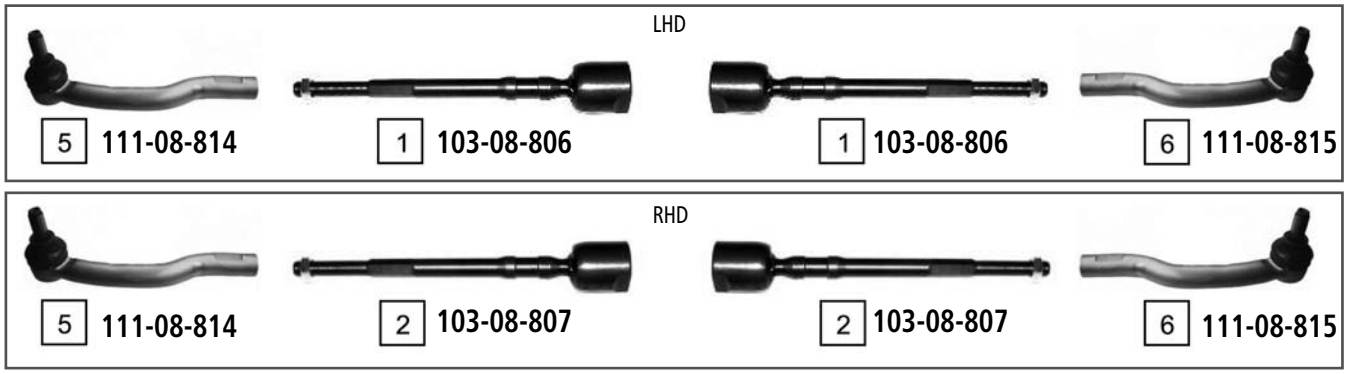

Ref	ASHIKA CODE	Description	OEM	Measures	Ref	ASHIKA CODE	Description	OEM	Measures
1	**103-08-806**	Axial Joint	48830-77A00	th:FM14X1.5R L:240	5	**111-08-814**	Tie Rod End	48820-78A00	
2	**103-08-807**	Axial Joint	48830-78A00	th:FM14X1.5R L:225	6	**111-08-815**	Tie Rod End	48810-78A00	
3	**71-08-806**	TCA	45202-77A01	c:15	7	**GOM-824**	Silentblock For Susp.Arm	09319 10030	
4	**71-08-807**	TCA	45201-77A01	c:15					

GRAND VITARA (FT-GT) **03/1998 - 04/2005**

6 **111-08-816**

1 **103-08-808**

1 **103-08-808**

7 **111-08-817**

-> 06/2001

2 **72-08-802**

3 **72-08-803**

06/2001 ->

4 **72-08-804**

5 **72-08-805**

Ref	ASHIKA CODE	Description	OEM	Measures	Ref	ASHIKA CODE	Description	OEM	Measures
1	**103-08-808**	Axial Joint	48830-65D00	th:MM16X1R L:227	5	**72-08-805**	TCA	45201-65D01	
2	**72-08-802**	TCA	45202-65D00		6	**111-08-816**	Tie Rod End Left	48820 65D00	
3	**72-08-803**	TCA	45201-65D00		7	**111-08-817**	Tie Rod End Right	48810 65D00	
4	**72-08-804**	TCA	45202 65D01						

O.E.M. names and numbers are used for reference purposes only Ashika assumes no responsibility for possible errors

GRAND VITARA (JB416-419-420) 10/2005 ->

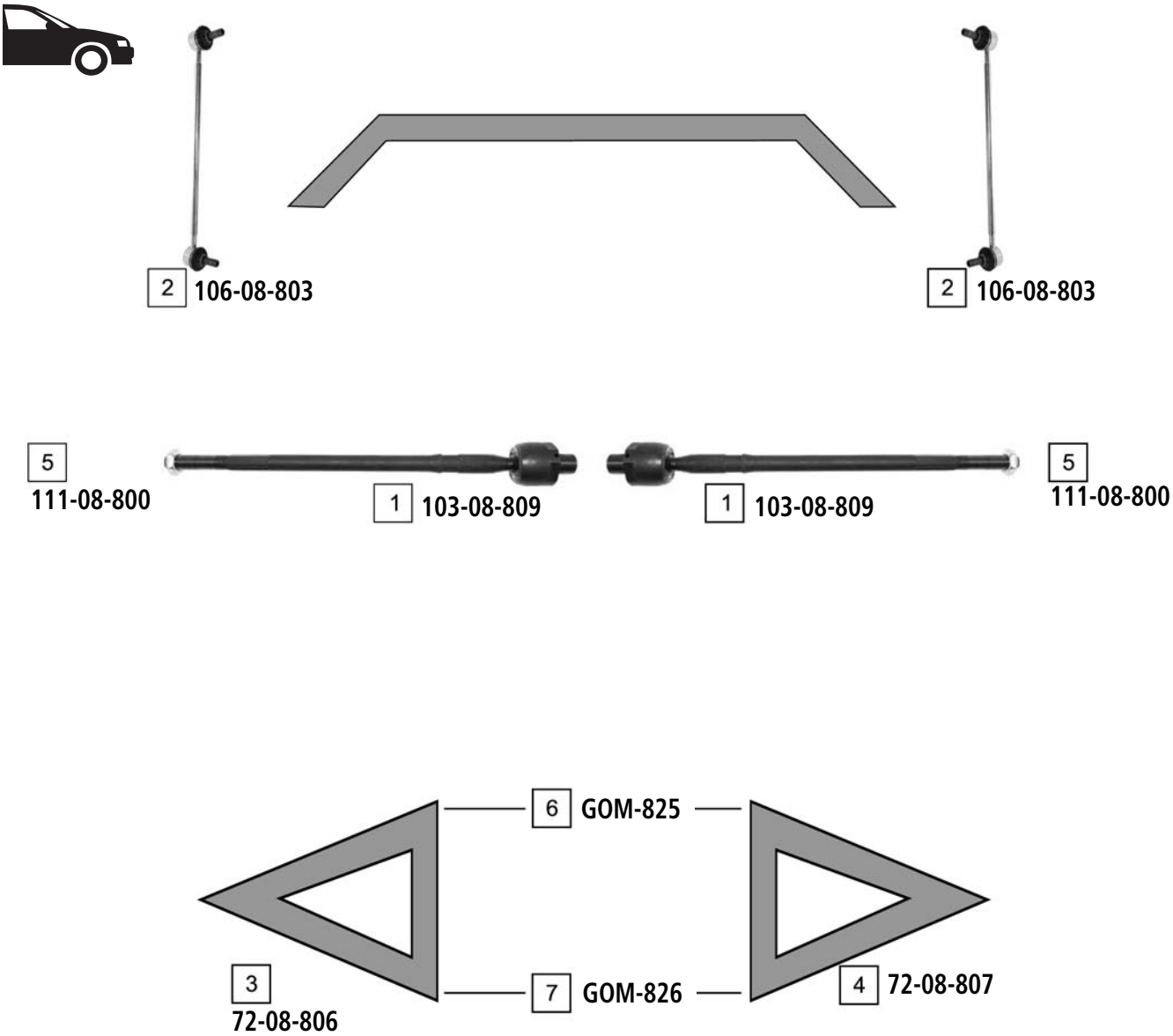

Ref	ASHIKA CODE	Description	OEM	Measures	Ref	ASHIKA CODE	Description	OEM	Measures
1	**103-08-809**	Axial Joint	48830 65J00	th:MM18X1.5R L:343	5	**111-08-800**	Tie Rod End	48810 65J00	
2	**106-08-803**	Stabiliser Link	42420 65J00		6	**GOM-825**	Silentblock For Susp.Arm	45261 65J00	
3	**72-08-806**	TCA Left	45202 65J00		7	**GOM-826**	Silentblock For Susp.Arm	Part of 72-08-806/72-08-807	
4	**72-08-807**	TCA Right	45201 65J00						

IGNIS (FH-RG413-RG415) **10/2000 - 09/2003**

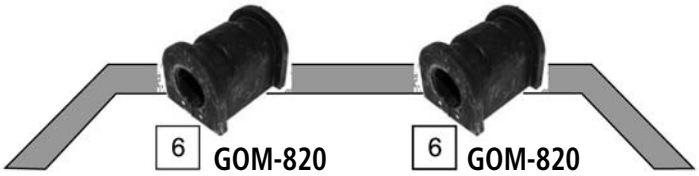

2 111-08-805

1 103-08-810

1 103-08-810

2 111-08-805

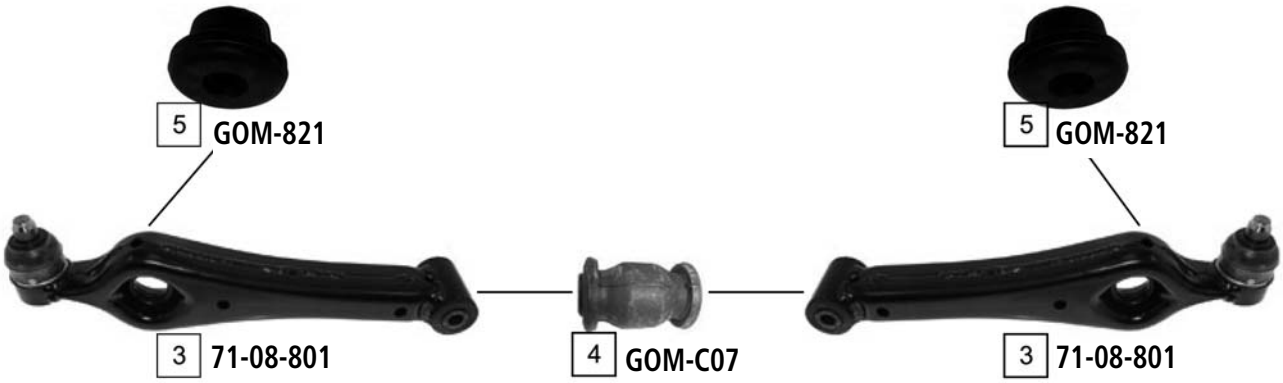

Ref	ASHIKA CODE	Description	OEM	Measures	Ref	ASHIKA CODE	Description	OEM	Measures
1	**103-08-810**	Axial Joint	48830 75F00	th:FM14X1.5R L:248	4	**GOM-C07**	Silentblock For Susp.Arm	45261 77A10	d:27.5
2	**111-08-805**	Tie Rod End	48810 76G00	c:12.7 th:FM12X1.25	5	**GOM-821**	Silentblock For Susp.Arm	42451 M76G00	
3	**71-08-801**	TCA	45200 76G20	c:15	6	**GOM-820**	Stabiliser Mounting	42431 70B42	d:21.5

O.E.M. names and numbers are used for reference purposes only Ashika assumes no responsibility for possible errors

IGNIS (RM413-415) 09/2003 ->

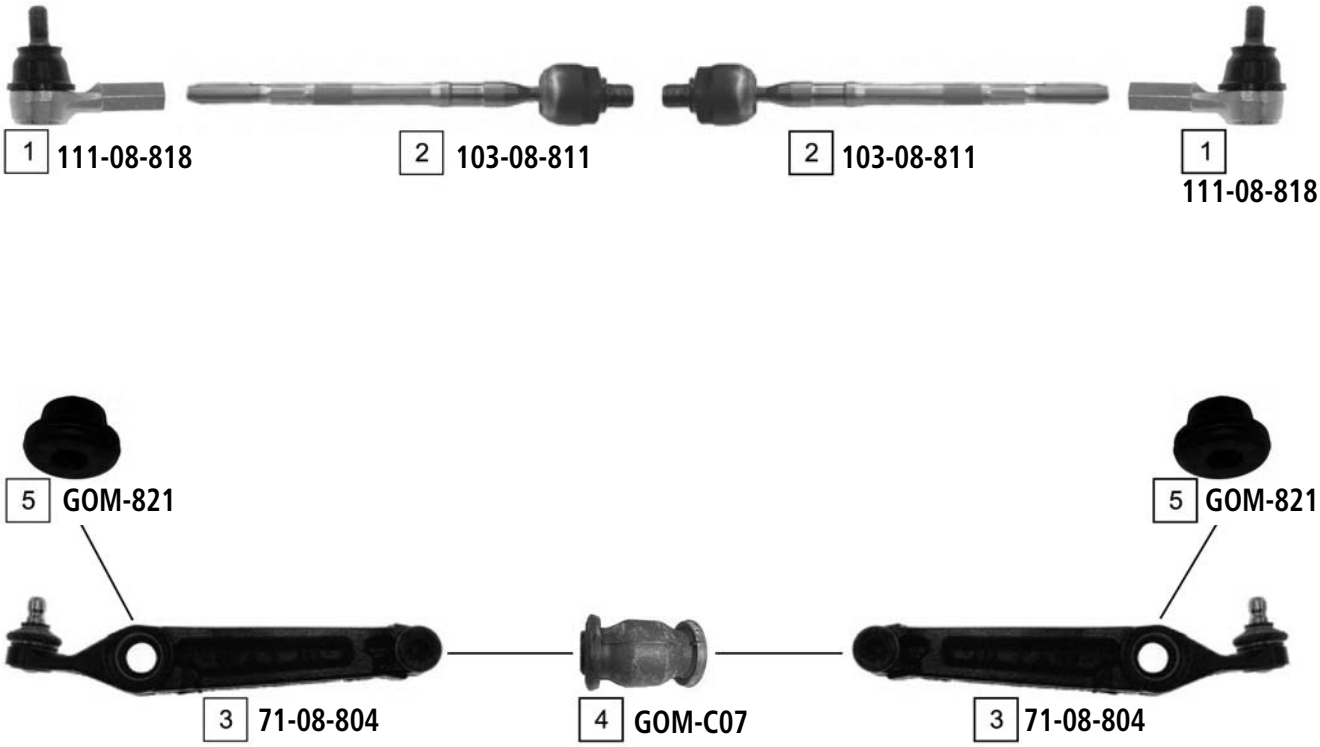

Ref	ASHIKA CODE	Description	OEM	Measures	Ref	ASHIKA CODE	Description	OEM	Measures
1	**111-08-818**	Tie Rod End	48810 83E02	c:13.1 th:FM12X1.25	4	**GOM-C07**	Silentblock For Susp.Arm	45261 77A10	d:27.5
2	**103-08-811**	Axial Joint	48830 86G00	th:MM14X1.5R L:247	5	**GOM-821**	Silentblock For Susp.Arm	42451 M76G00	
3	**71-08-804**	TCA	45200 85E00						

JIMNY (FJ) 09/1998 ->

1 111-08-820

2 111-08-819

3 111-08-807

4 111-08-811

Ref	ASHIKA CODE	Description	OEM	Measures	Ref	ASHIKA CODE	Description	OEM	Measures
1	111-08-820	Tie Rod End	48820-81A00	c:12.5 th:MM16X1.5L	3	111-08-807	Tie Rod End	48870 80002	
2	111-08-819	Tie Rod End	48810-81A00	c:12.5 th:MM16X1.5R	4	111-08-811	Tie Rod End	48870 80060	

O.E.M. names and numbers are used for reference purposes only Ashika assumes no responsibility for possible errors

SAMURAI (SJ) 11/1988 ->

2 111-08-806L

1 111-08-806R

3 111-0N-N041

Ref	ASHIKA CODE	Description	OEM	Measures	Ref	ASHIKA CODE	Description	OEM	Measures
1	111-08-806R	Tie Rod End	48810 77E00	c:12.5 th:MM16X1.5R	3	111-0N-N041	Rod Assy Steering		
2	111-08-806L	Tie Rod End	48820-80000	c:12.5 th:MM16X1.5L					

SWIFT I (AA) **10/1983 - 02/1989**

2 **111-08-805**

1 **103-08-802**

1 **103-08-802**

2 **111-08-805**

3 **73-08-804**

3 **73-08-804**

Ref	ASHIKA CODE	Description	OEM	Measures	Ref	ASHIKA CODE	Description	OEM	Measures
1	**103-08-802**	Axial Joint	48830-82000	th:FM14X1.5R L:264	3	**73-08-804**	TCA	45200-82000	c:15
2	**111-08-805**	Tie Rod End	48810 60B00	c:12.8 th:FM12X1.25					

O.E.M. names and numbers are used for reference purposes only Ashika assumes no responsibility for possible errors

SWIFT II (AH, AJ) **03/1989 - 05/2001**

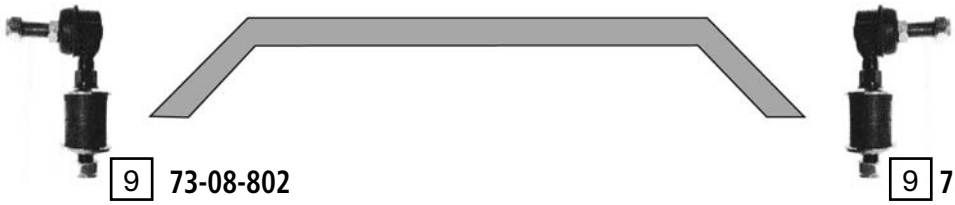

9 73-08-802

9 73-08-802

2 111-08-805

1 103-08-804

1 103-08-804

2 111-08-805

8 GOM-827

3 72-08-808

4 72-08-809

7 GOM-823

5 71-08-808
-> 1991

6 71-08-809
1991 ->

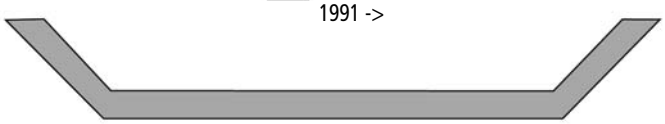

Ref	ASHIKA CODE	Description	OEM	Measures	Ref	ASHIKA CODE	Description	OEM	Measures
1	**103-08-804**	Axial Joint	48830-60B00	th:FM14X1.5R L:288	6	**71-08-809**	TCA	46300 60B10	
2	**111-08-805**	Tie Rod End	48810 60B00	c:12.8 th:FM12X1.25	7	**GOM-823**	Silentblock For Susp.Arm	46420 60B02	
3	**72-08-808**	TCA	45200 60820	c:15	8	**GOM-827**	Silentblock For Susp.Arm	45530 70C00	d:34
4	**72-08-809**	TCA	45200 60810	c:15	9	**73-08-802**	Stabiliser Link	46630-60B01	
5	**71-08-808**	TCA	46300 60B00						

SWIFT III (RS413-415) **02/2005 ->**

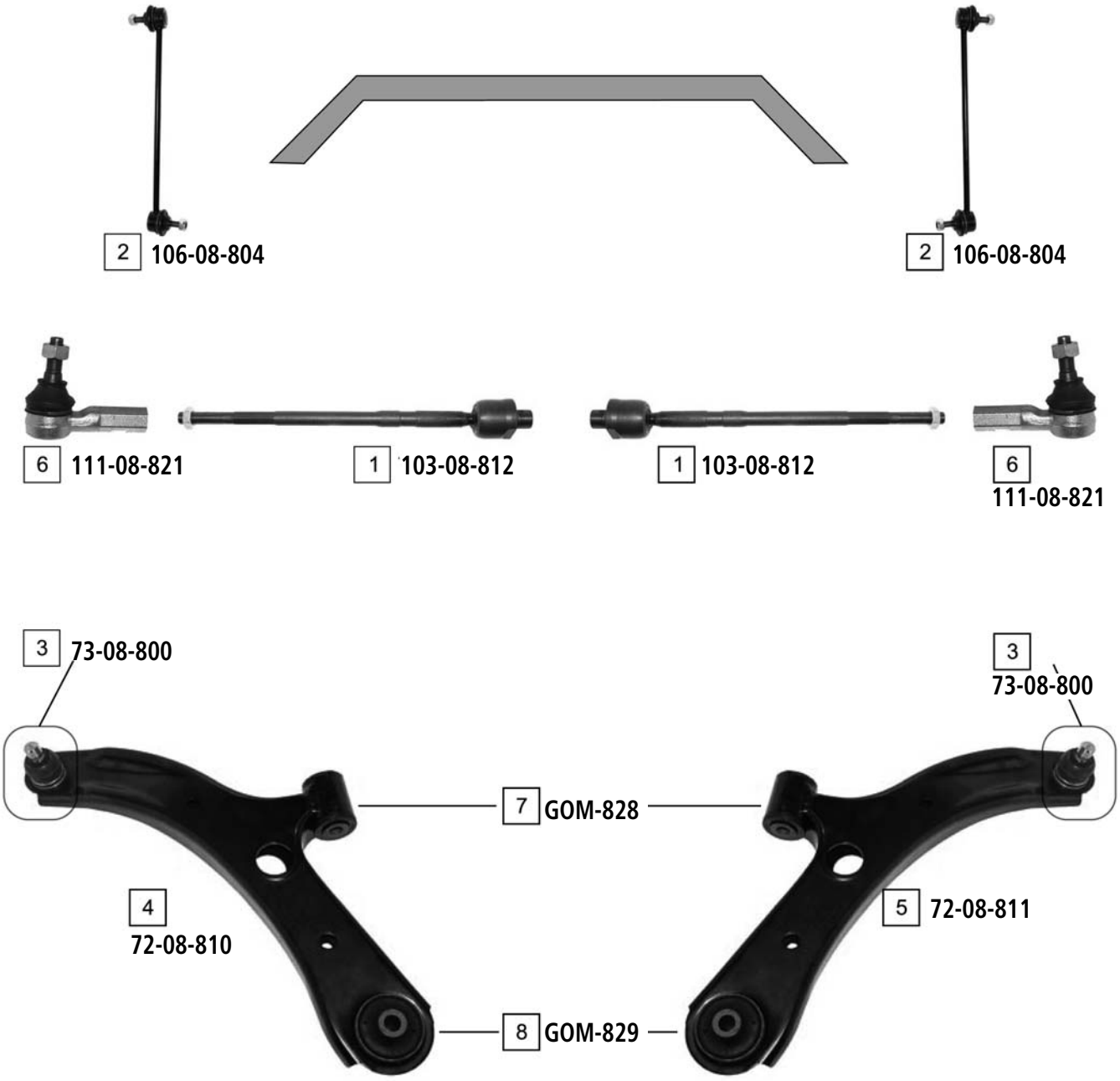

Ref	ASHIKA CODE	Description	OEM	Measures	Ref	ASHIKA CODE	Description	OEM	Measures
1	**103-08-812**	Axial Joint	48830 63J00	th:MM18X1.5R L:305	5	**72-08-811**	TCA Right Wbj	45201 62J00	c:16.5
2	**106-08-804**	Stabiliser Link	42420 62J00	L:300	6	**111-08-821**	Tie Rod End	48810 63J00	c:13.15 th:FM12X1.2
3	**73-08-800**	Ball Joint	Part of 72-08-810 72-08-811		7	**GOM-828**	Silentblock For Susp.Arm	45530 62J00	
4	**72-08-810**	TCA Left Wbj	45202 62J00	c:16.5	8	**GOM-829**	Silentblock For Susp.Arm	Part of 72-08-810/72-08-811	

O.E.M. names and numbers are used for reference purposes only Ashika assumes no responsibility for possible errors

SX4 (RW415-416-419) 06/2006 ->

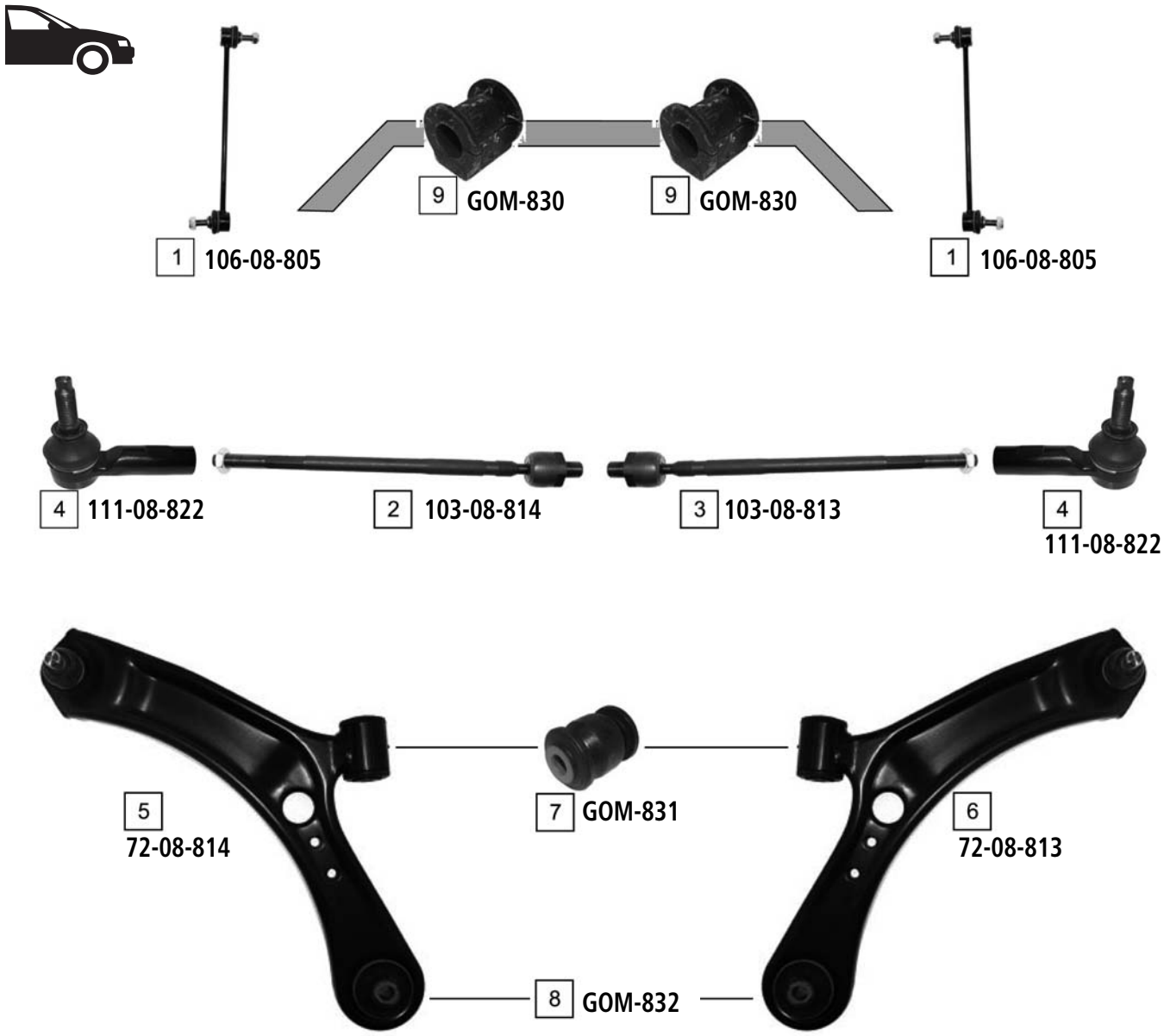

Ref	ASHIKA CODE	Description	OEM	Measures	Ref	ASHIKA CODE	Description	OEM	Measures
1	**106-08-805**	Stabiliser Link	42420 80J00	L:270	6	**72-08-813**	TCA Right Wbj	45201 79J00	
2	**103-08-814**	Axial Joint	48830 79J10	th:MM16X1R L:334	7	**GOM-831**	Silentblock For Susp.Arm	45261 79J00	
3	**103-08-813**	Axial Joint	48830 79J00	th:MM16X1R L:334	8	**GOM-832**	Silentblock For Susp.Arm	Part of 72-08-814/72-08-813	
4	**111-08-822**	Tie Rod End	48810 79J00		9	**GOM-830**	Stabiliser Mounting	42431 79J00	
5	**72-08-814**	TCA Left Wbj	45202 79J00						

VITARA (ESCUDO) (ET, TA) 05/1988 - 03/1998

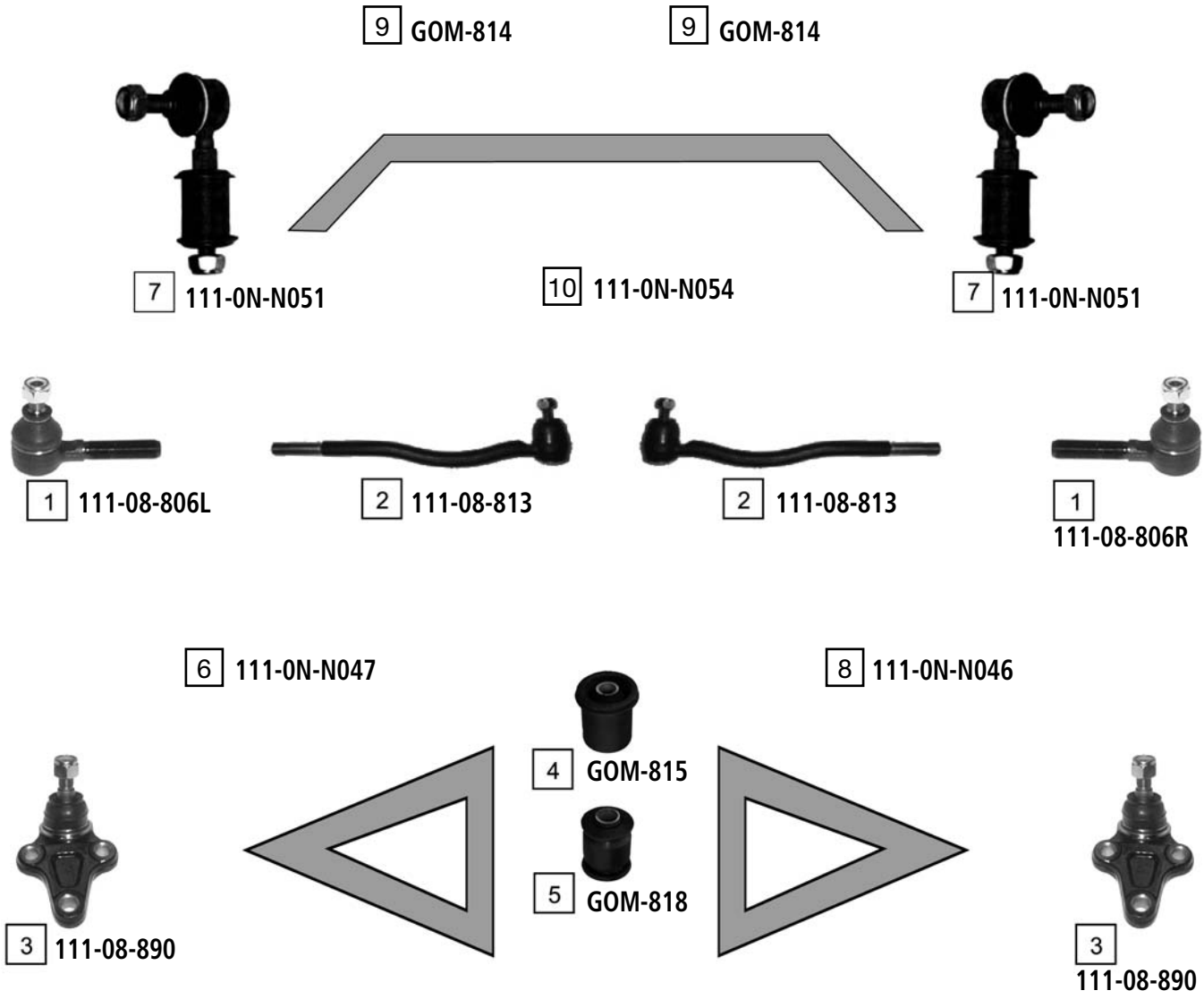

Ref	ASHIKA CODE	Description	OEM	Measures	Ref	ASHIKA CODE	Description	OEM	Measures
1	**111-08-806R**	Tie Rod End	48810 77E00	c:12.5 th:MM16X1.5R	6	**111-0N-N047**	TCA Left	45202-56B00	
2	**111-08-813**	Tie Rod End	48820 77E00	c:12.6 th:MM16X1.5L	7	**111-0N-N051**	Stabiliser Link	42420 60A00	
3	**111-08-890**	Ball Joint Lower	45700-60A00	c:16	8	**111-0N-N046**	TCA Right	45201-56B00	
4	**GOM-815**	Silentblock For Susp.Arm	09319-12044		9	**GOM-814**	Stabiliser Mounting	4241260A00	
5	**GOM-818**	Silentblock For Susp.Arm	09319-14007		10	**111-0N-N054**	Link Assy Steering	48850A60A00	

O.E.M. names and numbers are used for reference purposes only Ashika assumes no responsibility for possible errors

WAGON R+ (EM) **02/1998 - 05/2000**

3 **111-08-823**

1 **103-08-810**

1 **103-08-810**

3 **111-08-823**

2 **71-08-810**

2 **71-08-810**

Ref	ASHIKA CODE	Description	OEM	Measures	Ref	ASHIKA CODE	Description	OEM	Measures
1	**103-08-810**	Axial Joint	48830 75F00	th:FM14X1.5R L:248	3	**111-08-823**	Tie Rod End	48810-83E00	c:12.5 th:FM12X1.25
2	**71-08-810**	TCA	45200 75F00	c:15					

WAGON R+ (MM) **05/2000 ->**

3 **111-08-823**

1 **103-08-815**

1 **103-08-815**

3 **111-08-823**

2 **71-08-811**

2 **71-08-811**

Ref	ASHIKA CODE	Description	OEM	Measures	Ref	ASHIKA CODE	Description	OEM	Measures
1	**103-08-815**	Axial Joint	48830-83E00	th:MM14X1.5R L:243	3	**111-08-823**	Tie Rod End	48810-83E00	c:12.5 th:FM12X1.25
2	**71-08-811**	TCA	45200 76G00						

O.E.M. names and numbers are used for reference purposes only Ashika assumes no responsibility for possible errors

2000 D / PICK UP 1998 ->

1 111-00-003L

2 111-00-003R

3 73-00-002

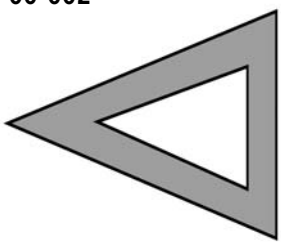

3 73-00-002

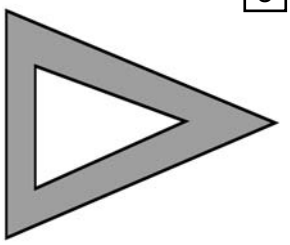

4 73-00-003

4 73-00-003

Ref	ASHIKA CODE	Description	OEM	Measures	Ref	ASHIKA CODE	Description	OEM	Measures
1	111-00-003L	Tie Rod End Left	2654-TELQ-0116		3	73-00-002	Ball Joint	2654-3211-0156	
2	111-00-003R	Tie Rod End Right	2655-TELQ-0117		4	73-00-003	Ball Joint	2654-3320-0113	

INDICA 10/1998 ->

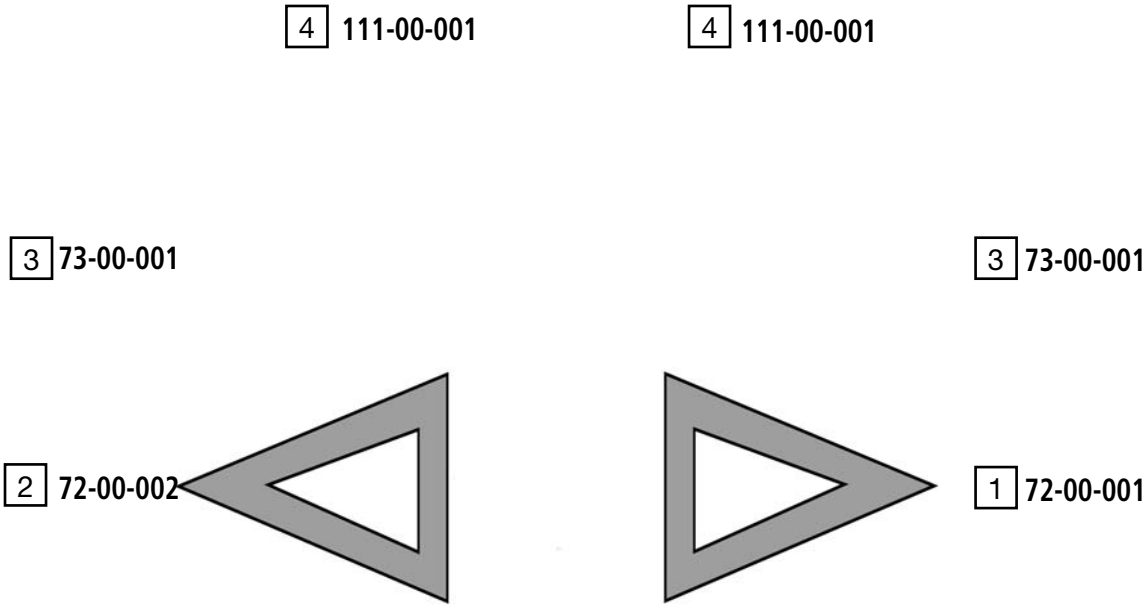

Ref	ASHIKA CODE	Description	OEM	Measures	Ref	ASHIKA CODE	Description	OEM	Measures
1	**72-00-001**	TCA Right	2702-3211-0150		3	**73-00-001**	Ball Joint	2702-3211-0106	
2	**72-00-002**	TCA Left	2702-3211-0149		4	**111-00-001**	Tie Rod End	2702-4660-3511	

O.E.M. names and numbers are used for reference purposes only Ashika assumes no responsibility for possible errors

INDIGO **01/2003 ->**

1 **111-00-002**

1 **111-00-002**

3 **72-00-004**

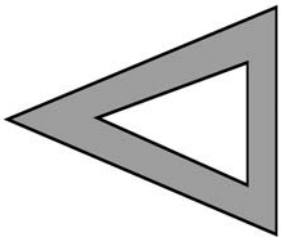

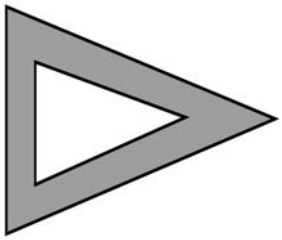

2 **72-00-003**

Ref	ASHIKA CODE	Description	OEM	Measures	Ref	ASHIKA CODE	Description	OEM	Measures
1	111-00-002	Tie Rod End	8855-4601-0001		3	72-00-004	TCA Left	2779-3210-0183	
2	72-00-003	TCA Right	2779-3210-0182						

SAFARI 01/1998 ->

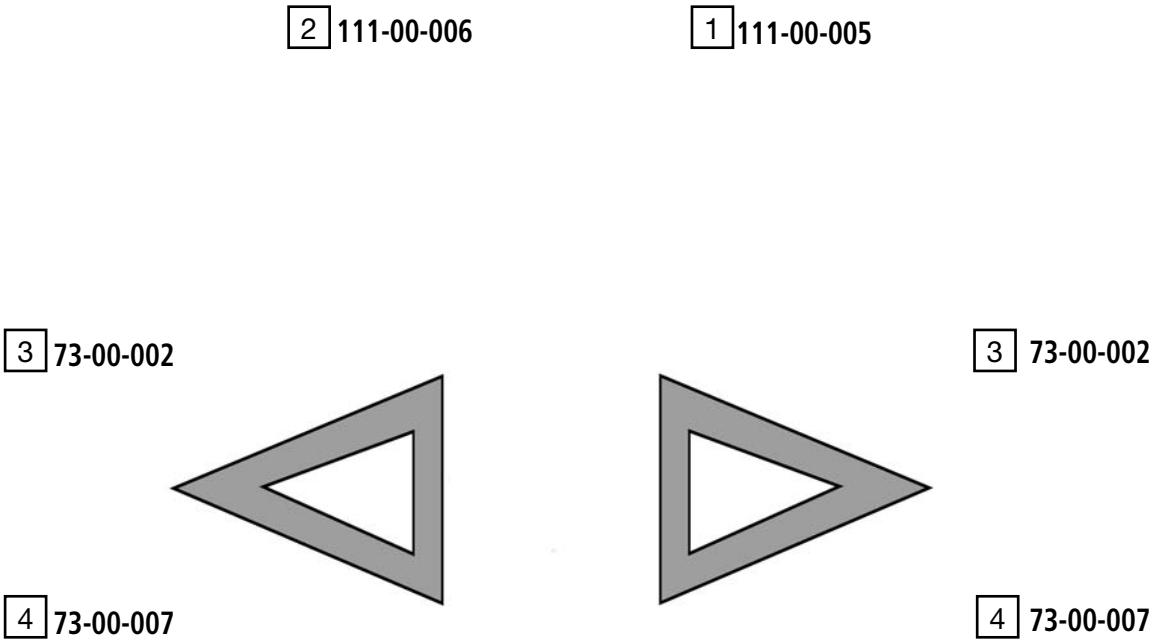

Ref	ASHIKA CODE	Description	OEM	Measures	Ref	ASHIKA CODE	Description	OEM	Measures
1	**111-00-005**	Tie Rod End	2699-4660-0121		3	**73-00-002**	Ball Joint	2654-3211-0156	
2	**111-00-006**	Tie Rod End	2699-4660-0113		4	**73-00-007**	Ball Joint	2699-3210-0150	

O.E.M. names and numbers are used for reference purposes only Ashika assumes no responsibility for possible errors

4 RUNNER **08/1987 - 03/1996**

1 **111-02-226**

3 **73-02-292**

3 **73-02-292**

1 **111-02-226**

2 **73-02-227**

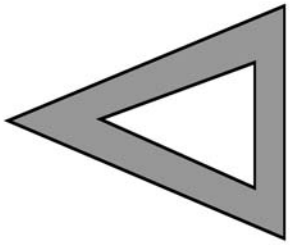

UPPER

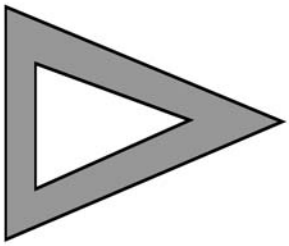

2 **73-02-227**

4 **59-02-244**
FOR VEHICLES WITHOUT POWER STEERING

5 **59-02-245**

6 **52-02-235**

Ref	ASHIKA CODE	Description	OEM	Measures	Ref	ASHIKA CODE	Description	OEM	Measures
1	**111-02-226**	Tie Rod End	45064-29115	c:14.8 th:MM17X1.5L	4	**59-02-244**	Pitman Arm	45490 39345	
2	**73-02-227**	Ball Joint	43350-39045	c:17.1	5	**59-02-245**	Pitman Arm	45490-39355	
3	**73-02-292**	Tie Rod End	45406 39165	c:14.7 th:FM17X1.5R	6	**52-02-235**	Tie Rod End	45401 35220	

AVENSIS (_T22_) 09/1997 - 02/2003

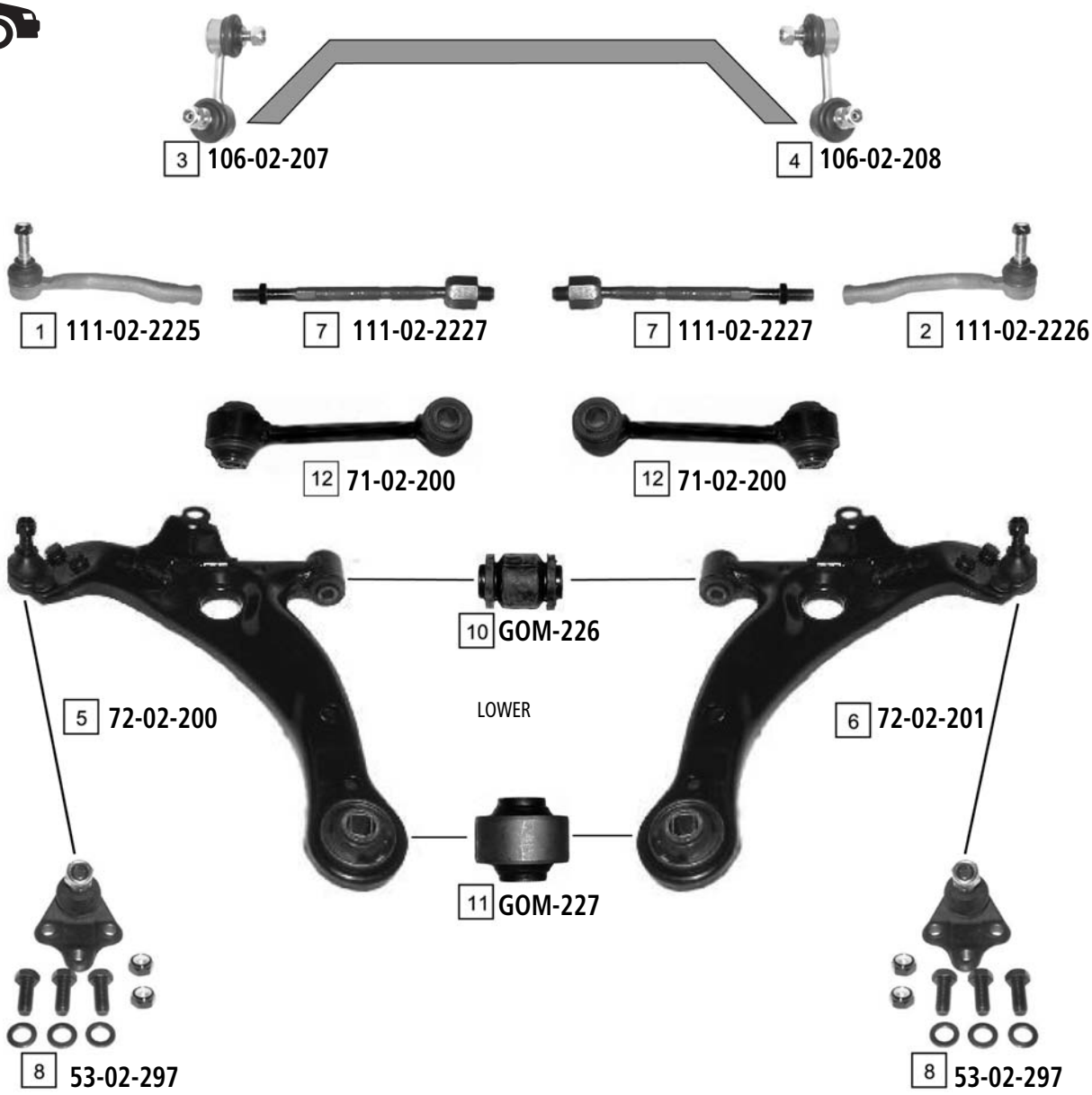

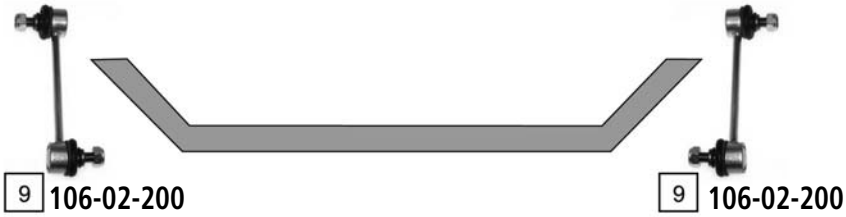

Ref	ASHIKA CODE	Description	OEM	Measures	Ref	ASHIKA CODE	Description	OEM	Measures
1	**111-02-2225**	Tie Rod End Right	45046-29365	c:12.7 th:FM14X1.5R	7	**111-02-2227**	Axial Joint	45503-05020	th:MM16X1.5R L:242
2	**111-02-2226**	Tie Rod End Left	45047-29125	c:12.7 th:FM14X1.5R	8	**53-02-297**	Ball Joint lower	43330 09030	c:15
3	**106-02-207**	Stabiliser Link Left	48810 05012	L:70	9	**106-02-200**	Stabiliser Link	48830 05020	L:140
4	**106-02-208**	Stabiliser Link Right	48820 05012	L:70	10	**GOM-226**	Silentblock For Susp.Arm	Part of 72-02-200/72-02-201	d:38
5	**72-02-200**	TCA Left	48068-05050	c:15	11	**GOM-227**	Silentblock For Susp.Arm	48061 05010	d:60.2
6	**72-02-201**	TCA Right	48069-05050	c:15	12	**71-02-200**	Track Link	48650 20020	

O.E.M. names and numbers are used for reference purposes only Ashika assumes no responsibility for possible errors

AVENSIS (_T25_) 03/2003 ->

10 106-02-204

10 106-02-204

AZT/CDT

3 111-02-200

1 103-02-200

1 103-02-200

3 111-02-200

ZZT

4 111-02-201

2 103-02-208

2 103-02-208

4 111-02-201

7 GOM-228

5 72-02-202

LOWER

6 72-02-203

8 GOM-229

9 73-02-200

9 73-02-200

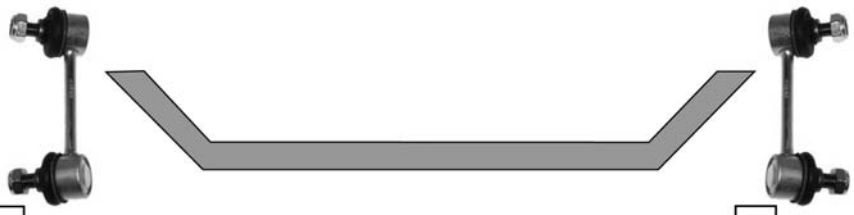

11 106-02-212

12 106-02-213

Ref	ASHIKA CODE	Description	OEM	Measures	Ref	ASHIKA CODE	Description	OEM	Measures
1	103-02-200	Axial Joint	45503 0F010		7	GOM-228	Silentblock For Susp.Arm	Part of 72-02-202/72-02-203	
2	103-02-208	Axial Joint	Part of		8	GOM-229	Silentblock For Susp.Arm	Part of 72-02-202/72-02-203	
3	111-02-200	Tie Rod End	45046 29425		9	73-02-200	Ball Joint lower	43330 09210	c:15
4	111-02-201	Tie Rod End	45046 09230		10	106-02-204	Stabiliser Link	48820 47010	L:285
5	72-02-202	TCA Left	48069 05070	c:15	11	106-02-212	Stabiliser Link	48840 21010	L:100
6	72-02-203	TCA Right	48068 05070	c:15	12	106-02-213	Stabiliser Link	48830 21020	L:100

AVENSIS VERSO (ACM20, CLM20) **05/2001 ->**

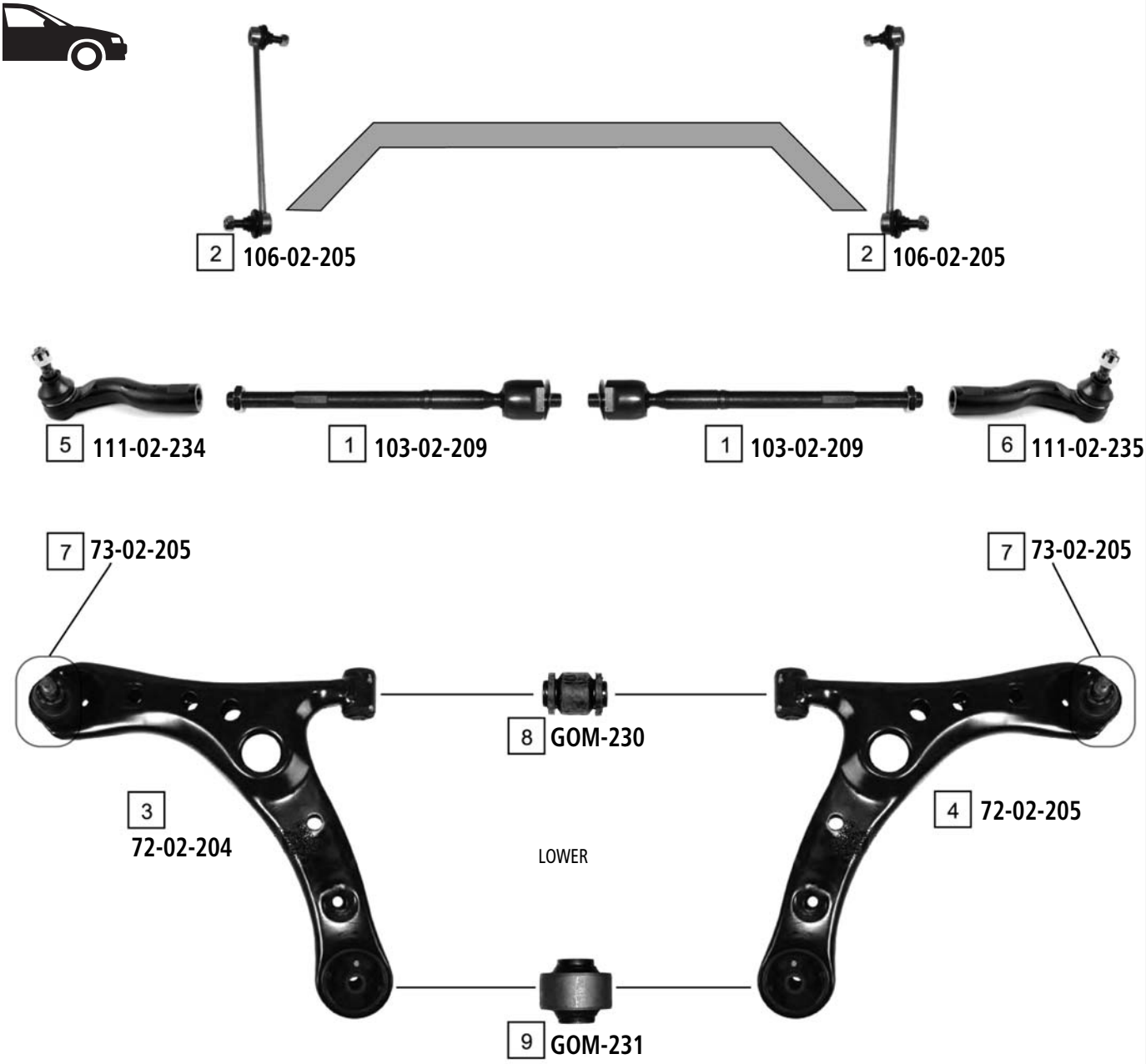

Ref	ASHIKA CODE	Description	OEM	Measures	Ref	ASHIKA CODE	Description	OEM	Measures
1	**103-02-209**	Axial Joint	45503-49105	th:MM14X1.5R L:290	6	**111-02-235**	Tie Rod End Right	45047 49055	c:12.6 th:FM16X1.5R
2	**106-02-205**	Stabiliser Link	48820-44020	L:280	7	**73-02-205**	Ball Joint	Part of 72-02-204/72-02-205	c:17.5
3	**72-02-204**	TCA Left Wbj	48069 49065		8	**GOM-230**	Silentblock For Susp.Arm	Part of 72-02-204/72-02-205	
4	**72-02-205**	TCA Right Wbj	48068 49065		9	**GOM-231**	Silentblock For Susp.Arm	Part of 72-02-204/72-02-205	
5	**111-02-234**	Tie Rod End Left	45046 49125	c:12.6 th:FM16X1.5R					

O.E.M. names and numbers are used for reference purposes only Ashika assumes no responsibility for possible errors

AYGO 06/2005 ->

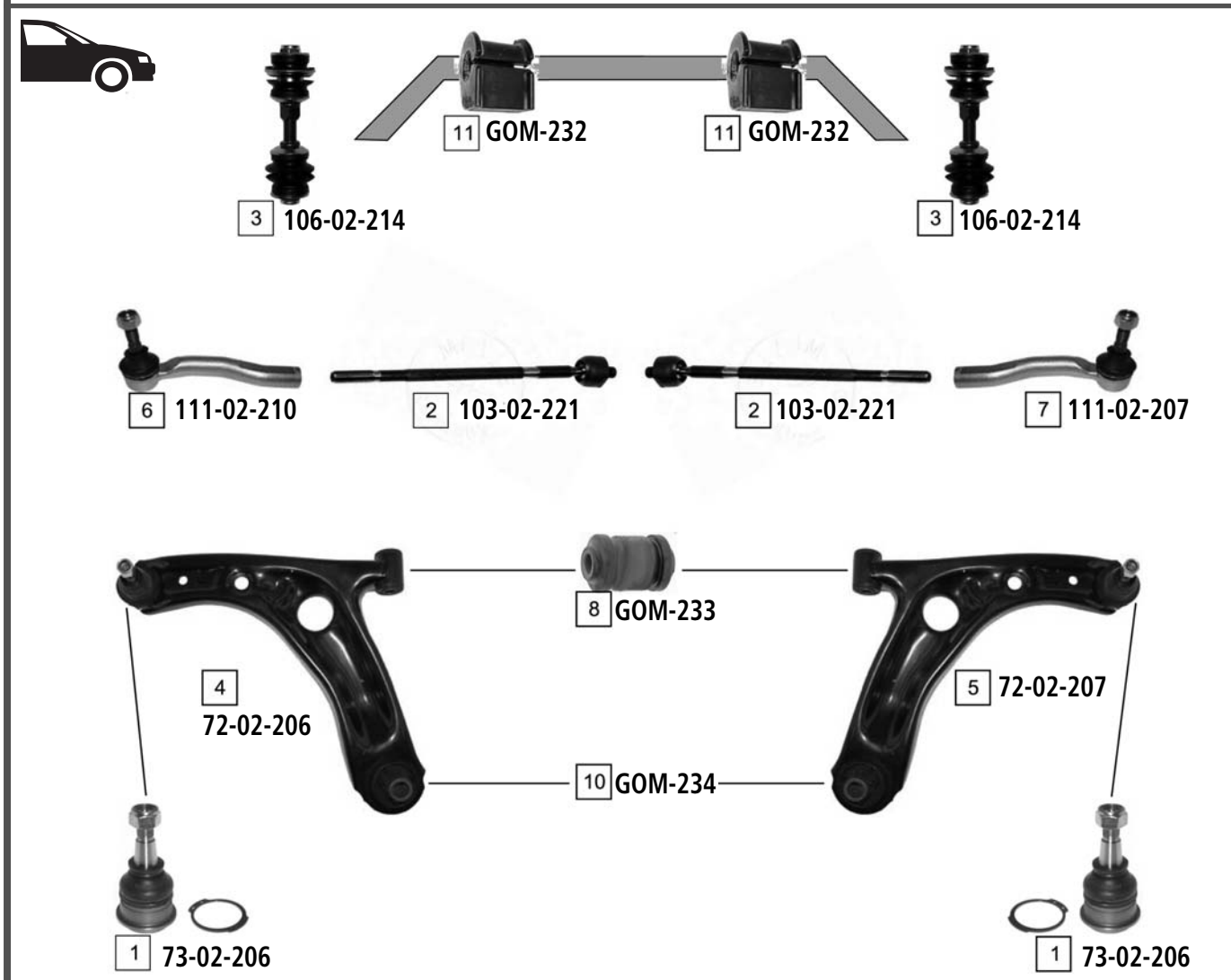

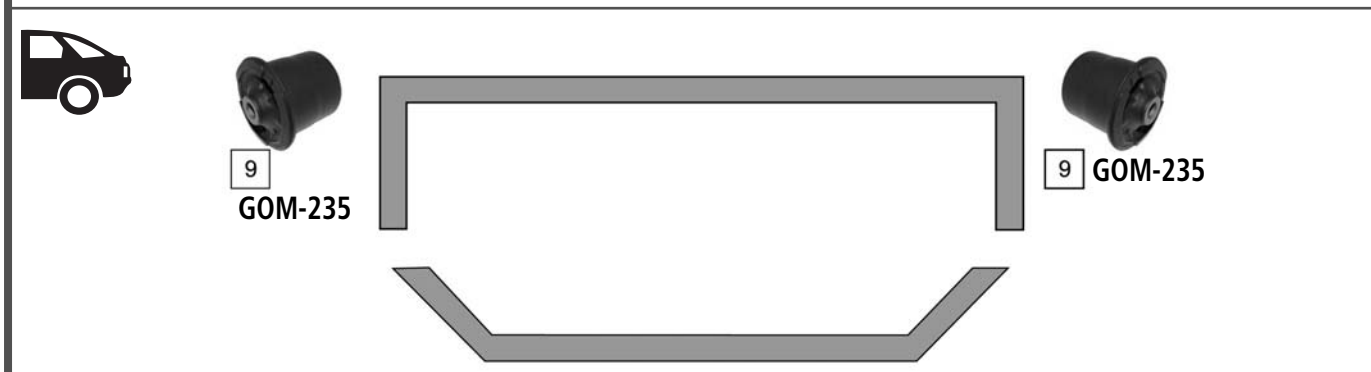

Ref	ASHIKA CODE	Description	OEM	Measures	Ref	ASHIKA CODE	Description	OEM	Measures
1	73-02-206	Ball Joint Lower	Part of 72-02-206/72-02-207	c:13.5	7	111-02-207	Tie Rod End Right	3817 64	
2	103-02-221	Axial Joint	Part of		8	GOM-233	Silentblock For Susp.Arm	Part of 72-02-206/72-02-207	d:32
3	106-02-214	Stabiliser Link	5091 10		9	GOM-235	Mounting Axle Body	48725 0H010	
4	72-02-206	TCA Left Wbj	48069 0H010		10	GOM-234	Silentblock For Susp.Arm	Part of 72-02-206/72-02-207	
5	72-02-207	TCA Right Wbj	48068 0H010		11	GOM-232	Stabiliser Mounting	5094 A8	
6	111-02-210	Tie Rod End Left	3817 63						

CAMRY (CV1_, SV1_) **10/1982 - 07/1988**

1 **110-02-282**

1 **110-02-282**

2 **73-02-216**

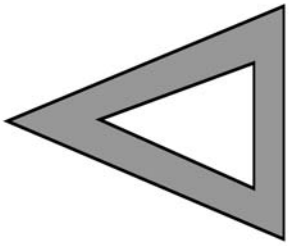

LOWER

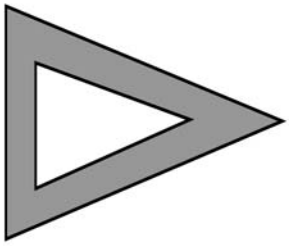

2 **73-02-216**

Ref	ASHIKA CODE	Description	OEM	Measures	Ref	ASHIKA CODE	Description	OEM	Measures
1	**110-02-282**	Tie Rod End	45460-39165	c:12.6 th:FM14X1.5R	2	**73-02-216**	Ball Joint Lower	43330-39135	c:16

O.E.M. names and numbers are used for reference purposes only Ashika assumes no responsibility for possible errors

CAMRY (_V2) **08/1986 - 05/1991**

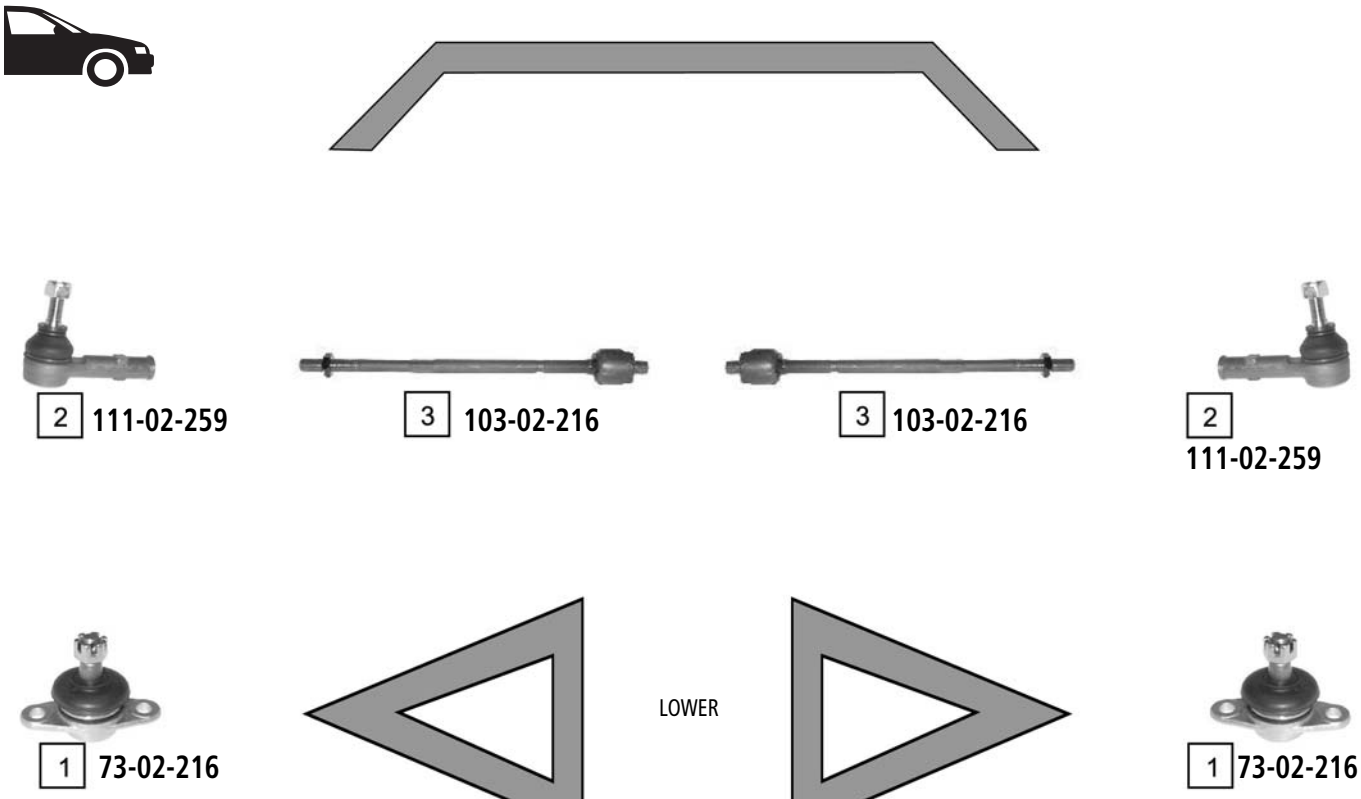

Ref	ASHIKA CODE	Description	OEM	Measures	Ref	ASHIKA CODE	Description	OEM	Measures
1	**73-02-216**	Ball Joint Lower	43330-39135	c:16	3	**103-02-216**	Axial Joint	45503-29105	th:MM14X1.5R L:327
2	**111-02-259**	Tie Rod End	45046 19175	c:12.7 th:FM14X1.5R					

CAMRY (_V10) **06/1991 - 06/1997**

2 **111-02-283**

3 **103-02-291**

3 **103-02-291**

2 **111-02-283**

1 **73-02-239**

LOWER

1 **73-02-239**

4 **106-02-217**

4 **106-02-217**

Ref	ASHIKA CODE	Description	OEM	Measures	Ref	ASHIKA CODE	Description	OEM	Measures
1	**73-02-239**	Ball Joint	43330 39285	c:17.5	3	**103-02-291**	Axial Joint	45503-29355	th:MM14X1.5R L:337
2	**111-02-283**	Tie Rod End	45046-29255	c:12.7 th:FM15X1.5R	4	**106-02-217**	Stabiliser Link	48830 33010	L:192

O.E.M. names and numbers are used for reference purposes only Ashika assumes no responsibility for possible errors

CAMRY (_V20) 08/1996 - 11/2001

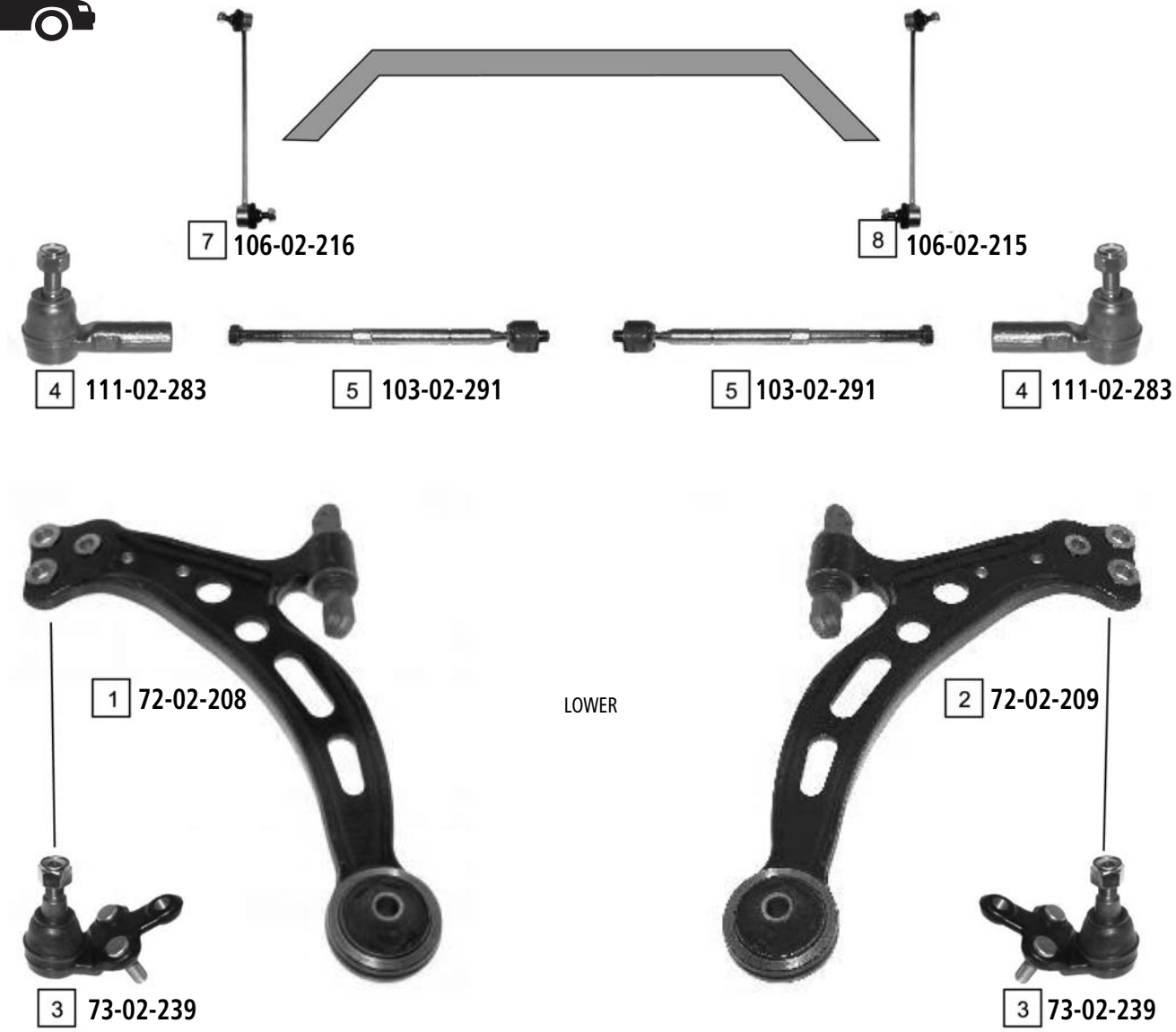

Ref	ASHIKA CODE	Description	OEM	Measures	Ref	ASHIKA CODE	Description	OEM	Measures
1	**72-02-208**	TCA Left	48069 33031	c:17.5	5	**103-02-291**	Axial Joint	45503-29355	th:MM14X1.5R L:337
2	**72-02-209**	TCA Right	48068 33031	c:17.5	6	**106-02-217**	Stabiliser Link	48830 33010	L:192
3	**73-02-239**	Ball Joint	43330 39285	c:17.5	7	**106-02-216**	Stabiliser Link Left	48810 33010	L:285
4	**111-02-283**	Tie Rod End	45046-29255	c:12.7 th:FM15X1.5R	8	**106-02-215**	Stabiliser Link Right	48820 33020	L:285

CAMRY (_V30) **11/2001-01/2006**

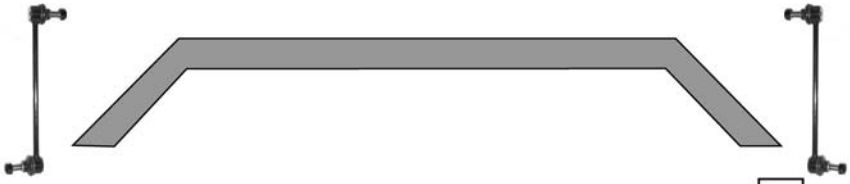

1 106-02-218

1 106-02-218

5 111-02-230

4 103-02-222

4 103-02-222

6 111-02-231

2 73-02-208

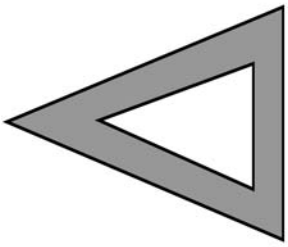

LOWER

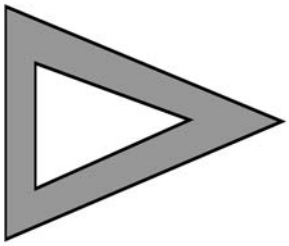

3 73-02-209

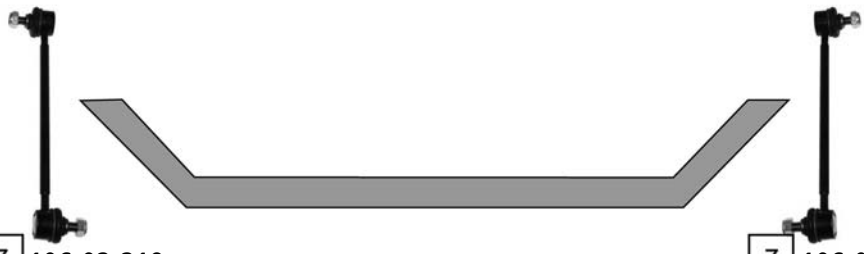

7 106-02-219

7 106-02-219

Ref	ASHIKA CODE	Description	OEM	Measures	Ref	ASHIKA CODE	Description	OEM	Measures
1	**106-02-218**	Stabiliser Link	48820 28050	L:260	5	**111-02-230**	Tie Rod End Left	45470 39215	c: 13 th: FM15x1.5R
2	**73-02-208**	Ball Joint Left	43340-29175	c:17.6	6	**111-02-231**	Tie Rod End Right	45460 39615	c: 13 th: FM15x1.5R
3	**73-02-209**	Ball Joint Right	43330-29405	c:17.6	7	**106-02-219**	Stabiliser Link	48830 48010	L:237
4	**103-02-222**	Axial Joint	45503-39225	th: MM14x1.5R L:238					

O.E.M. names and numbers are used for reference purposes only Ashika assumes no responsibility for possible errors

CARINA (CA60, TA60, TA62) **09/1981-09/1983**
CELICA (RA6) **01/1982-10/1986**

MS

1 **110-02-235**

1 **110-02-235**

PS

2 **110-02-231**

2 **110-02-231**

3 **53-06-609**
EXC CELICA

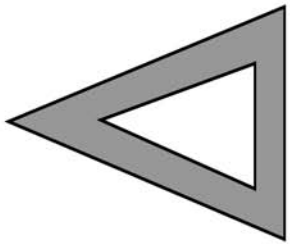

LOWER

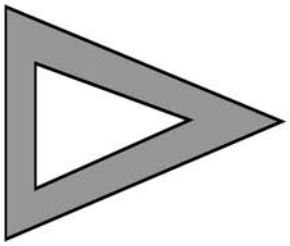

3 **53-06-609**
EXC CELICA

Ref	ASHIKA CODE	Description	OEM	Measures	Ref	ASHIKA CODE	Description	OEM	Measures
1	**110-02-235**	Tie Rod	45460-19165		3	**53-06-609**	Ball Joint Lower	43308-12030	c: 14.5
2	**110-02-231**	Tie Rod	45460-19155						

CARINA E (_T19_) 04/1992 - 09/1997

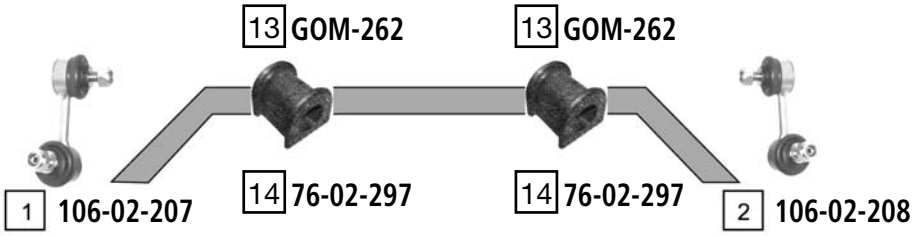

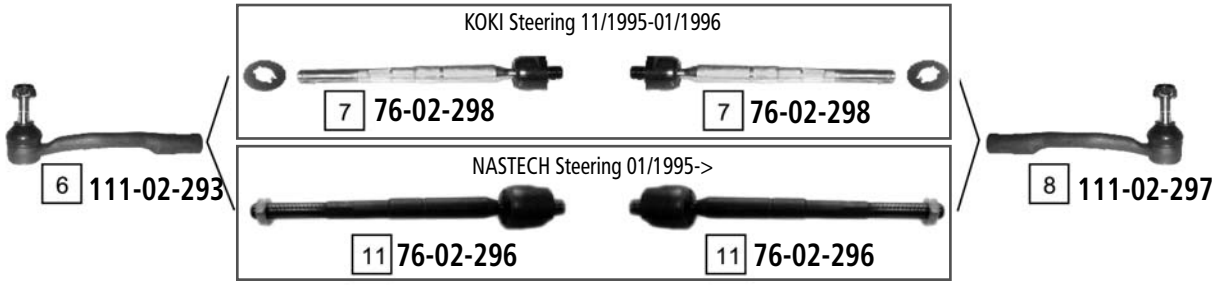

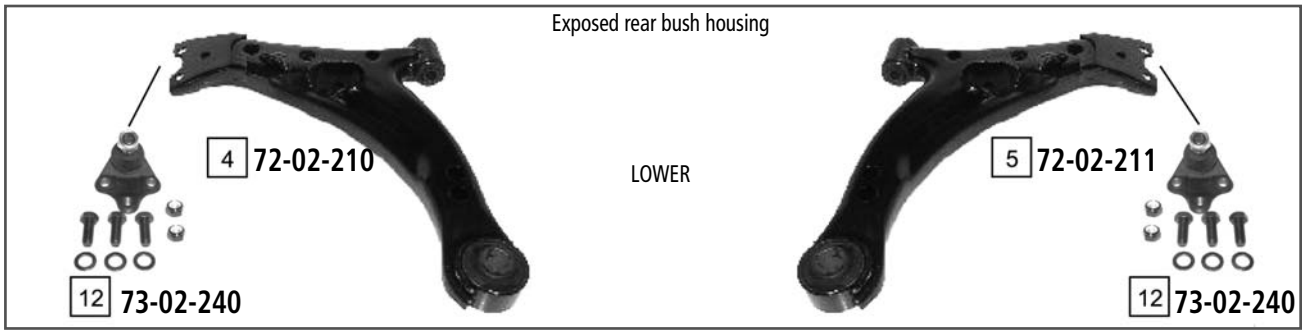

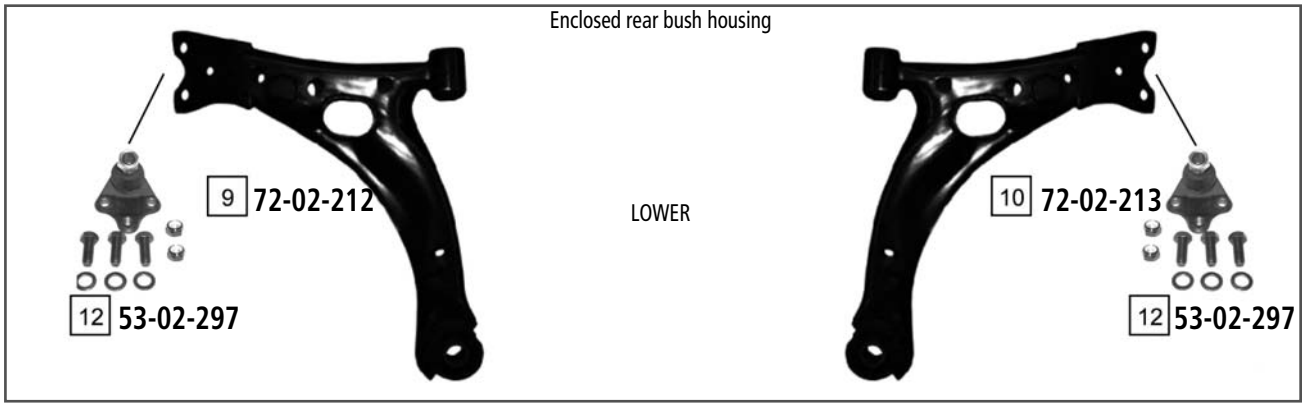

Ref	ASHIKA CODE	Description	OEM	Measures	Ref	ASHIKA CODE	Description	OEM	Measures
1	**106-02-207**	Stabiliser Link Left	48810 05012	L:70	8	**111-02-297**	Tie Rod End Right	45046-29275	c:12.6 th:FM15X1.5R
2	**106-02-208**	Stabiliser Link Right	48820 05012	L:70	9	**72-02-212**	TCA Left	48069-20221	
3	**106-02-202**	Stabiliser Link	48830 12050	L.105	10	**72-02-213**	TCA Right	48068-20221	
4	**72-02-210**	TCA Left	49069-20260	c:15.9	11	**76-02-296**	Axial Joint	45503-05010	th:MM14X1.5R L.239
5	**72-02-211**	TCA Right	48068-20260	c:15.9	12	**53-02-297**	Ball Joint Lower	43330 09030	c:15
6	**111-02-293**	Tie Rod End Left	45047-29075	c:12.6 th:FM15X1.5R	13	**GOM-262**	Stabiliser Mounting	4881530040	d:20
7	**76-02-298**	Axial Joint	45503 29435	th:MM14X1.5R L:240	14	**76-02-297**	Axial Joint	4550329475	

O.E.M. names and numbers are used for reference purposes only Ashika assumes no responsibility for possible errors

CARINA II (_T15_) **10/1983 - 05/1988**

MS -> 08/1984

4 **73-02-291** 2 **103-02-202** 2 **103-02-202** 4 **73-02-291**

MS 09/1984 ->

5 **111-02-259** 1 **103-02-206** 1 **103-02-206** 5 **111-02-259**

PS 09/1984 ->

5 **111-02-259** 3 **103-02-210** 3 **103-02-210** 5 **111-02-259**

6 **53-02-296**

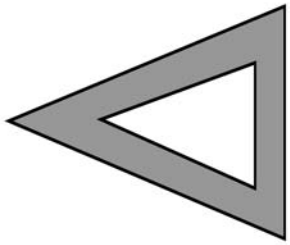

LOWER

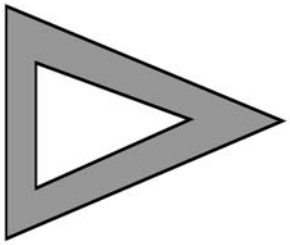

6 **53-02-296**

Ref	ASHIKA CODE	Description	OEM	Measures	Ref	ASHIKA CODE	Description	OEM	Measures
1	**103-02-206**	Axial Joint	45503-19036	th: MM14X1.5R L:315	4	**73-02-291**	Tie Rod End	45046-29135	c:12.6 th:FM12X1.25
2	**103-02-202**	Axial Joint	45503-19035	th: MM14X1.5R L:317	5	**111-02-259**	Tie Rod End	45046 19175	c:12.7 th:FM14X1.5R
3	**103-02-210**	Axial Joint	45503-19056	th: MM14X1.5R L:297	6	**53-02-296**	Ball Joint Lower	43330-29136	c:15.9

CARINA II (_T17_) **12/1987 - 06/1993**

1 **106-02-206**

2 **106-02-299**

MS

5 **111-02-295** 3 **103-02-295** 3 **103-02-295** 4 **111-02-265**

PS

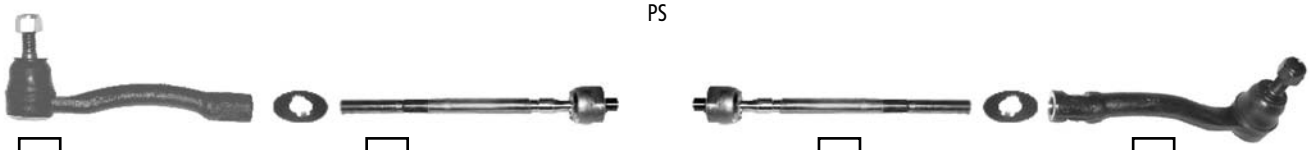

5 **111-02-295** 6 **103-02-294** 6 **103-02-294** 4 **111-02-265**

7 **73-02-299**

LOWER

7 **73-02-299**

Ref	ASHIKA CODE	Description	OEM	Measures	Ref	ASHIKA CODE	Description	OEM	Measures
1	**106-02-206**	Stabiliser Link Left	48810-20010	L:58	5	**111-02-295**	Tie Rod End Right	45046-29165	c.12.5 th:FM15X1.5R
2	**106-02-299**	Stabiliser Link Right	48820-20030	L:60.5	6	**103-02-294**	Axial Joint	45503-29165	th:MM14X1.5R L:250
3	**103-02-295**	Axial Joint	45503-29155	th:MM14X1.5R L:259	7	**73-02-299**	Ball Joint Lower	43330-29145	c.15.9
4	**111-02-265**	Tie Rod End Left	45047-29045	c.12.5 th:FM15X1.5R					

O.E.M. names and numbers are used for reference purposes only Ashika assumes no responsibility for possible errors

CELICA (ST16_, AT16_) 08/1985 - 08/1989

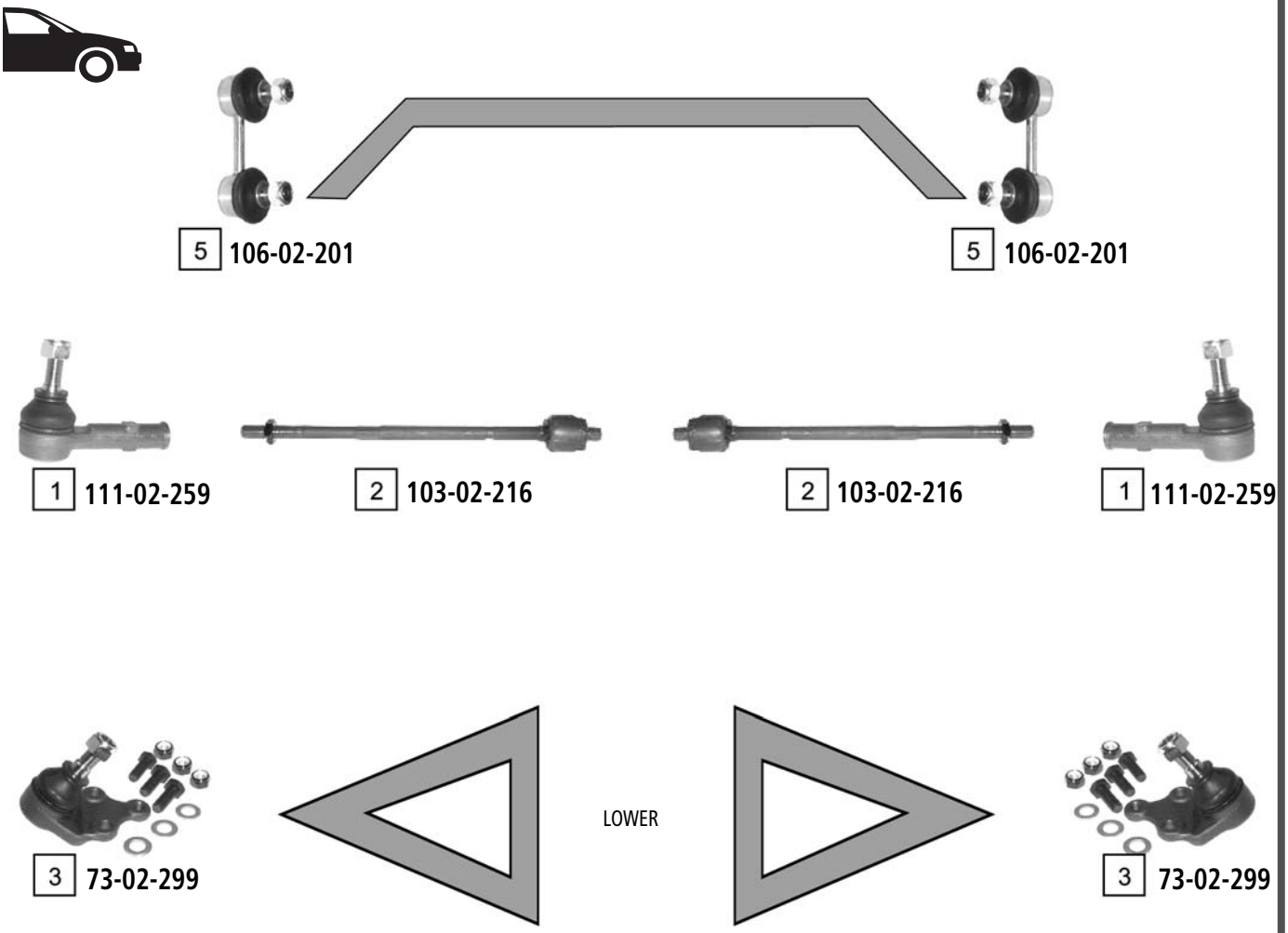

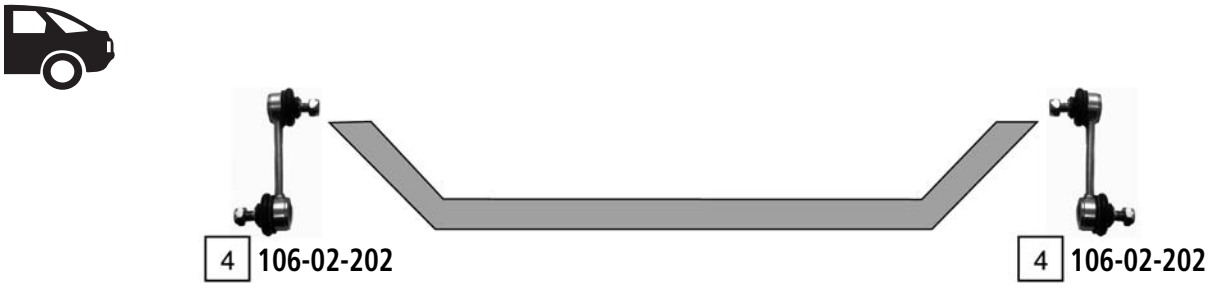

Ref	ASHIKA CODE	Description	OEM	Measures	Ref	ASHIKA CODE	Description	OEM	Measures
1	**111-02-259**	Tie Rod End	45046 19175	c:12.7 th:FM14X1.5R	4	**106-02-202**	Stabiliser Link	48830 12050	L:105
2	**103-02-216**	Axial Joint	45503-29105	th:MM14X1.5R L:327	5	**106-02-201**	Stabiliser Link	48820-20010	L:69
3	**73-02-299**	Ball Joint Lower	43330-29145	c:15.9					

CELICA (ST18_-AT180) **09/1989 - 11/1993**

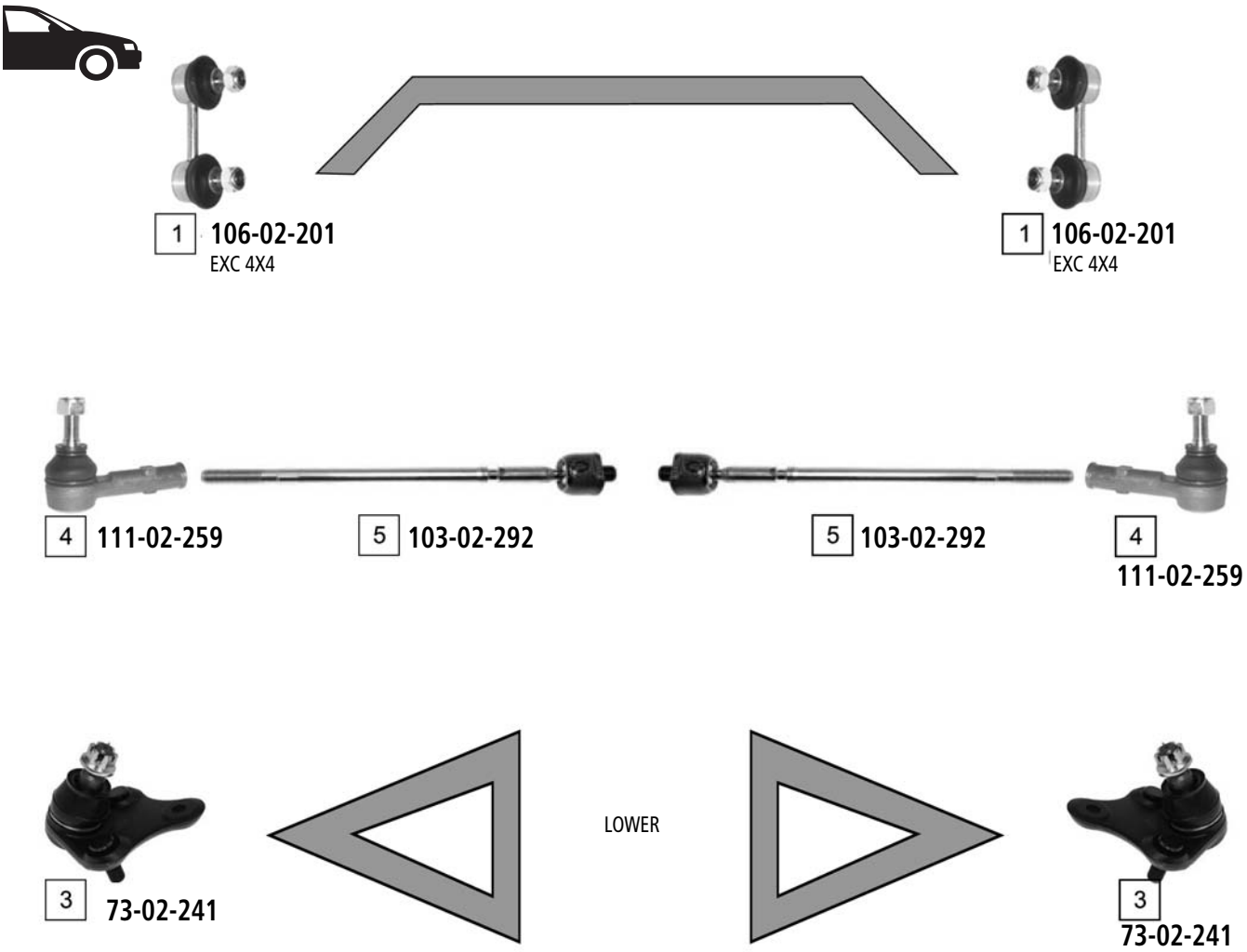

Ref	ASHIKA CODE	Description	OEM	Measures	Ref	ASHIKA CODE	Description	OEM	Measures
1	**106-02-201**	Stabiliser Link	48820-20010	L:69	4	**111-02-259**	Tie Rod End	45046 19175	c:12.7 th:FM14X1.5R
2	**106-02-202**	Stabiliser Link	48830 12050	L:105	5	**103-02-292**	Axial Joint	45503 29245	th:MM14X1.5R L:341
3	**73-02-241**	Ball Joint	43330 29225	c:18.2					

O.E.M. names and numbers are used for reference purposes only Ashika assumes no responsibility for possible errors

CELICA (_T20_) **11/1993 - 11/1999**

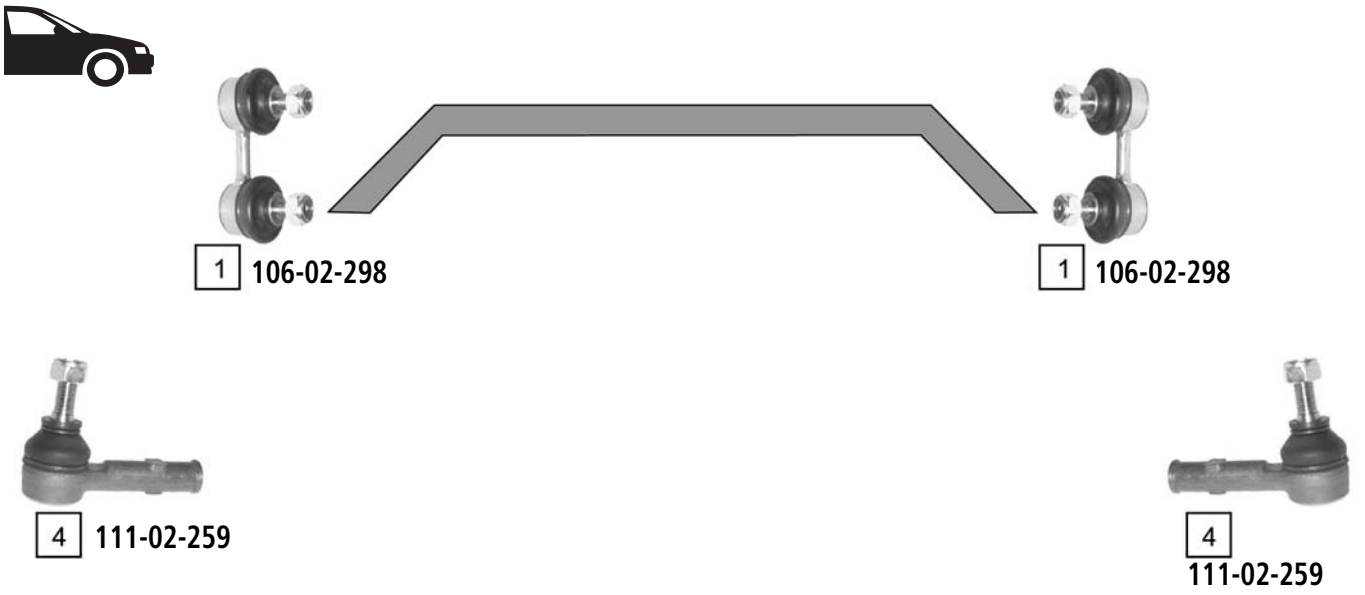

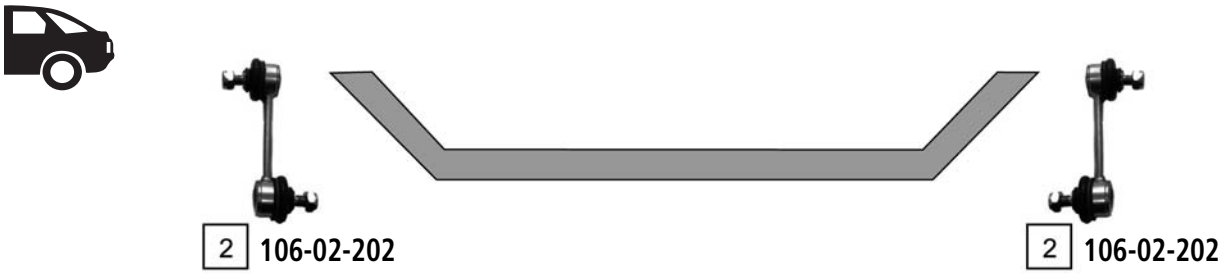

Ref	ASHIKA CODE	Description	OEM	Measures	Ref	ASHIKA CODE	Description	OEM	Measures
1	**106-02-298**	Stabiliser Link	48820 33010	L:60.5	3	**53-02-297**	Ball Joint Lower	43330 09030	c:15
2	**106-02-202**	Stabiliser Link	48830 12050	L.105	4	**111-02-259**	Tie Rod End	45046 19175	c:12.7 th:FM14X1.5R

CELICA (ZZT23_) **11/1999 - 12/2005**

1 106-02-220

1 106-02-220

5 111-02-252

7 103-02-223

7 103-02-223

6 111-02-237

3 72-02-214

LOWER

4 72-02-215

2 73-02-210

2 73-02-210

Ref	ASHIKA CODE	Description	OEM	Measures	Ref	ASHIKA CODE	Description	OEM	Measures
1	106-02-220	Stabiliser Link	48820 32010	L:285	5	111-02-252	Tie Rod End	45047-49015	
2	73-02-210	Ball Joint	43330 19115	c:15.3	6	111-02-237	Tie Rod End	45046-49085	
3	72-02-214	TCA	48069 20381		7	103-02-223	Axial Joint	45503-49035	th:MM14X1.5R L.303
4	72-02-215	TCA	48068 20380						

O.E.M. names and numbers are used for reference purposes only Ashika assumes no responsibility for possible errors

COROLLA (_E7_) **09/1979 - 08/1987**

2 **108-06-622**

3 **103-02-201**

3 **103-02-201**

2 **108-06-622**

1 **53-06-609**

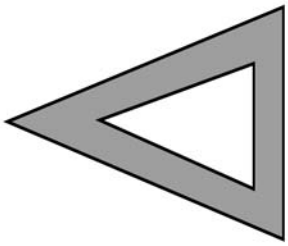

LOWER

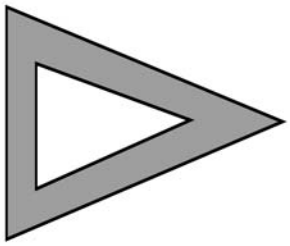

1 **53-06-609**

Ref	ASHIKA CODE	Description	OEM	Measures	Ref	ASHIKA CODE	Description	OEM	Measures
1	**53-06-609**	Ball Joint Lower	43308-12030	c:14.5	3	**103-02-201**	Axial Joint	45503-10020	th:MM14X1.5R L:146
2	**108-06-622**	Tie Rod	45460-19125						

COROLLA (_E8_) **06/1983 - 05/1988**

MS -> 09/1984

1 **73-02-291** 2 **103-02-202** 2 **103-02-202** 1 **73-02-291**

MS 10/1984 ->

4 **111-02-259** 5 **103-02-206** 5 **103-02-206** 4 **111-02-259**

PS 10/1984 ->

4 **111-02-259** 6 **103-02-210** 6 **103-02-210** 4 **111-02-259**

3 **53-02-296**

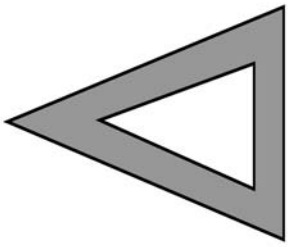

LOWER

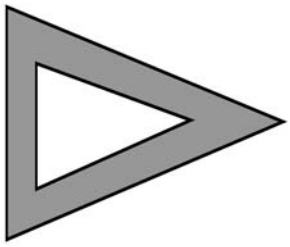

3 **53-02-296**

Ref	ASHIKA CODE	Description	OEM	Measures	Ref	ASHIKA CODE	Description	OEM	Measures
1	**73-02-291**	Tie Rod End	45046-29135	c:12.6 th:FM12X1.25	4	**111-02-259**	Tie Rod End	45046 19175	c:12.7 th:FM14X1.5R
2	**103-02-202**	Axial Joint	45503-19035	th:MM14X1.5R L:317	5	**103-02-206**	Axial Joint	45503-19036	th:MM14X1.5R L:315
3	**53-02-296**	Ball Joint Lower	43330-29136	c:15.9	6	**103-02-210**	Axial Joint	45503-19056	th:MM14X1.5R L:297

O.E.M. names and numbers are used for reference purposes only Ashika assumes no responsibility for possible errors

COROLLA (_E9_) **07/1987 - 06/1993**

1 **106-02-201** 1 **106-02-201**

MS

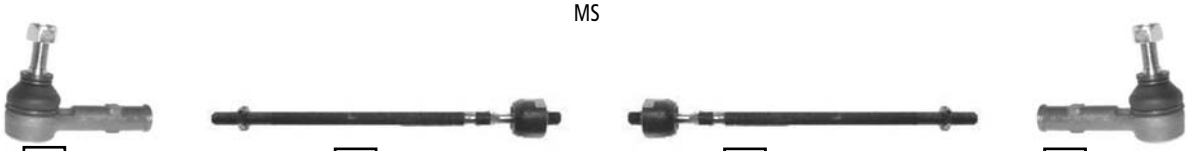

3 **111-02-259** 4 **103-02-213** 4 **103-02-213** 3 **111-02-259**

PS

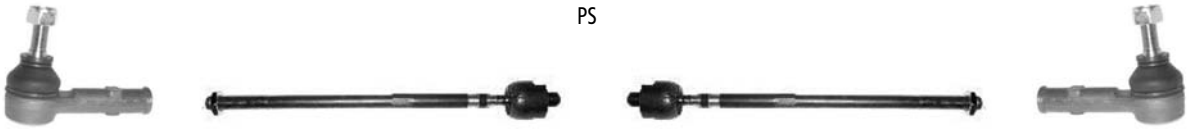

3 **111-02-259** 5 **103-02-214** 5 **103-02-214** 3 **111-02-259**

LOWER

6 **73-02-290** 7 **73-02-232R**

2 **106-02-202** 2 **106-02-202**

Ref	ASHIKA CODE	Description	OEM	Measures	Ref	ASHIKA CODE	Description	OEM	Measures
1	**106-02-201**	Stabiliser Link	48820-20010	L:69	5	**103-02-214**	Axial Joint	45503-19135	th:MM14X1.5R L:309
2	**106-02-202**	Stabiliser Link	48830 12050	L:105	6	**73-02-290**	Ball Joint Lower Left	43340-19015	c:15.6
3	**111-02-259**	Tie Rod End	45046 19175	c:12.7 th:FM14X1.5R	7	**73-02-232R**	Ball Joint Lower Right	43330-19065	c:15.6
4	**103-02-213**	Axial Joint	45503-19125	th:MM14X1.5R L:306					

COROLLA (_E10_) **07/1992 - 04/1997**

1 106-02-298

1 106-02-298

MS

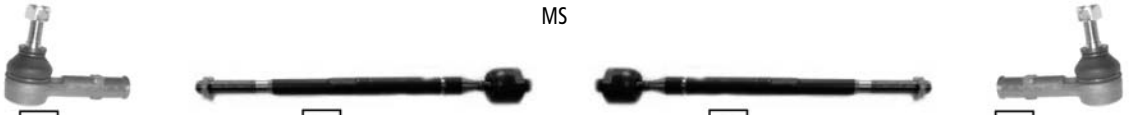

6 111-02-259 5 103-02-290 5 103-02-290 6 111-02-259

PS

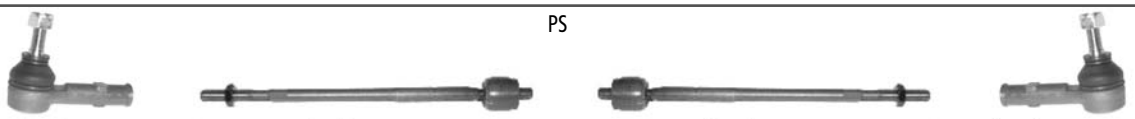

6 111-02-259 4 76-02-299 4 76-02-299 6 111-02-259

8 GOM-236

LOWER

2 72-02-216
-> 04/1995

9 GOM-237

3 72-02-217
-> 04/1995

7 53-02-297

7 53-02-297

05/1995 ->

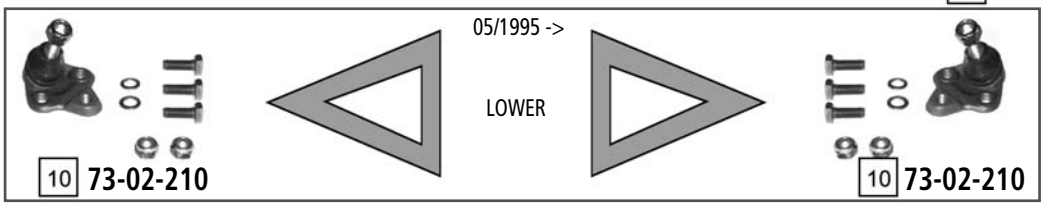

LOWER

10 73-02-210

10 73-02-210

11 106-02-202

11 106-02-202

Ref	ASHIKA CODE	Description	OEM	Measures	Ref	ASHIKA CODE	Description	OEM	Measures
1	106-02-298	Stabiliser Link	48820 33010	L:60.5	7	53-02-297	Ball Joint Lower	43330 09030	c:15
2	72-02-216	TCA Left	48069-12130		8	GOM-236	Silentblock For Susp.Arm	48654-12070	d:34.5
3	72-02-217	TCA Right	48068-12130		9	GOM-237	Silentblock For Susp.Arm	48655-12050	d:46
4	76-02-299	Axial Joint	45503-19205	th:MM14X1.5R L:330	10	73-02-210	Ball Joint	43330 19115	c.15.3
5	103-02-290	Axial Joint	45503-29365	th:MM14X1.5R L:315	11	106-02-202	Stabiliser Link	48830 12050	L:105
6	111-02-259	Tie Rod End	45046 19175	c:12.7 th:FM14X1.5R					

O.E.M. names and numbers are used for reference purposes only Ashika assumes no responsibility for possible errors

COROLLA (_E11_) 04/1997 - 11/2001

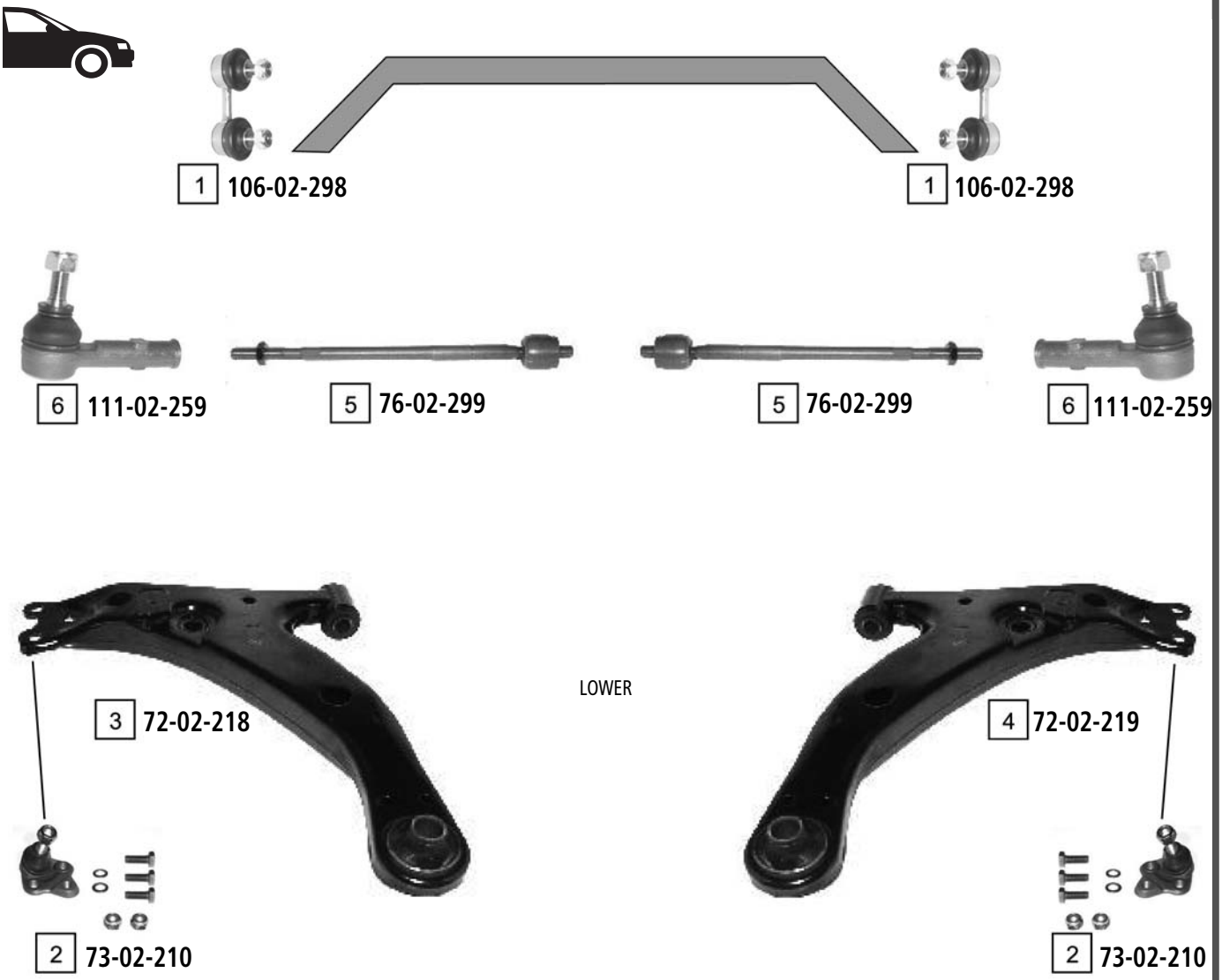

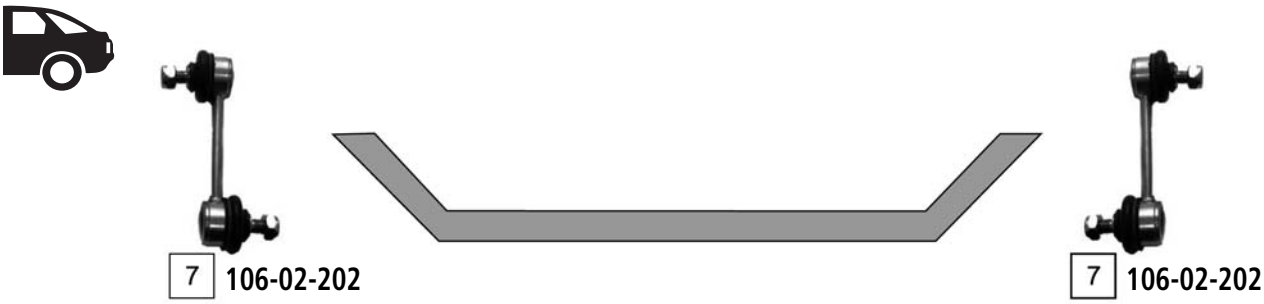

Ref	ASHIKA CODE	Description	OEM	Measures	Ref	ASHIKA CODE	Description	OEM	Measures
1	**106-02-298**	Stabiliser Link	48820 33010	L:60.5	5	**76-02-299**	Axial Joint	45503-19205	th:MM14X1.5R L:330
2	**73-02-210**	Ball Joint	43330 19115	c:15.3	6	**111-02-259**	Tie Rod End	45046 19175	c:12.7 th:FM14X1.5R
3	**72-02-218**	TCA Left	48069-12171		7	**106-02-202**	Stabiliser Link	48830 12050	L:105
4	**72-02-219**	TCA Right	48068-12171						

COROLLA (_E12_) **12/2001 ->**

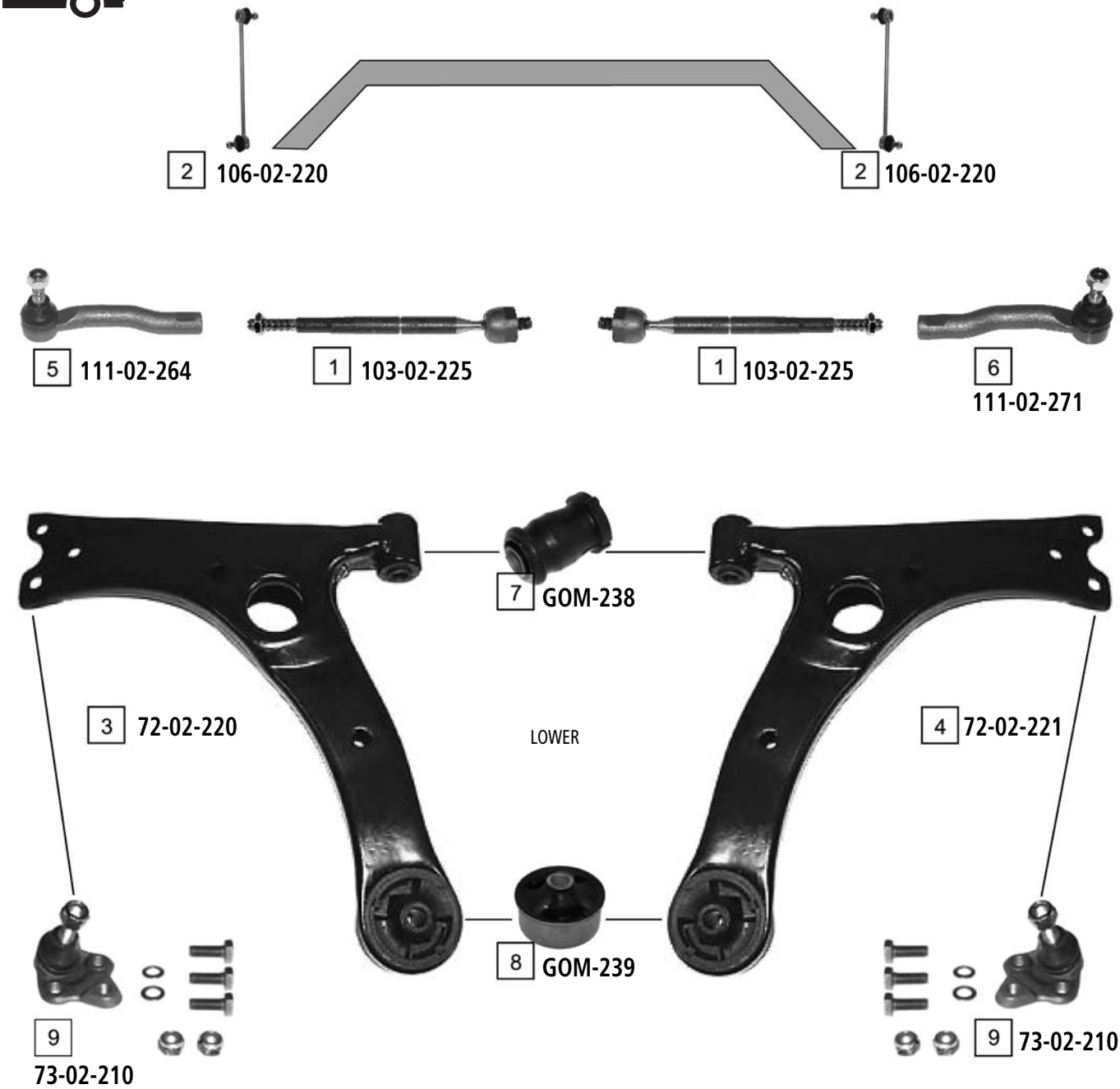

Ref	ASHIKA CODE	Description	OEM	Measures	Ref	ASHIKA CODE	Description	OEM	Measures
1	**103-02-225**	Axial Joint	45503-12130	th:MM14X1.5R L:272	6	**111-02-271**	Tie Rod End Right	45046 19265	c:12.6 th.FM14X1.5R
2	**106-02-220**	Stabiliser Link	48820-32010	L:285	7	**GOM-238**	Silentblock For Susp.Arm	Part of 72-02-220/72-02-221	d:34.5
3	**72-02-220**	TCA Left	48069-12260	c:15	8	**GOM-239**	Silentblock For Susp.Arm	Part of 72-02-220/72-02-221	d:68.3
4	**72-02-221**	TCA Right	48068-12260	c:15	9	**73-02-210**	Ball Joint	43330 19115	c.15.3
5	**111-02-264**	Tie Rod End Left	45047 19115	c:12.6 th:FM14X1.5R					

O.E.M. names and numbers are used for reference purposes only Ashika assumes no responsibility for possible errors

COROLLA VERSO (_E12J_) **01/2002 - 05/2004**

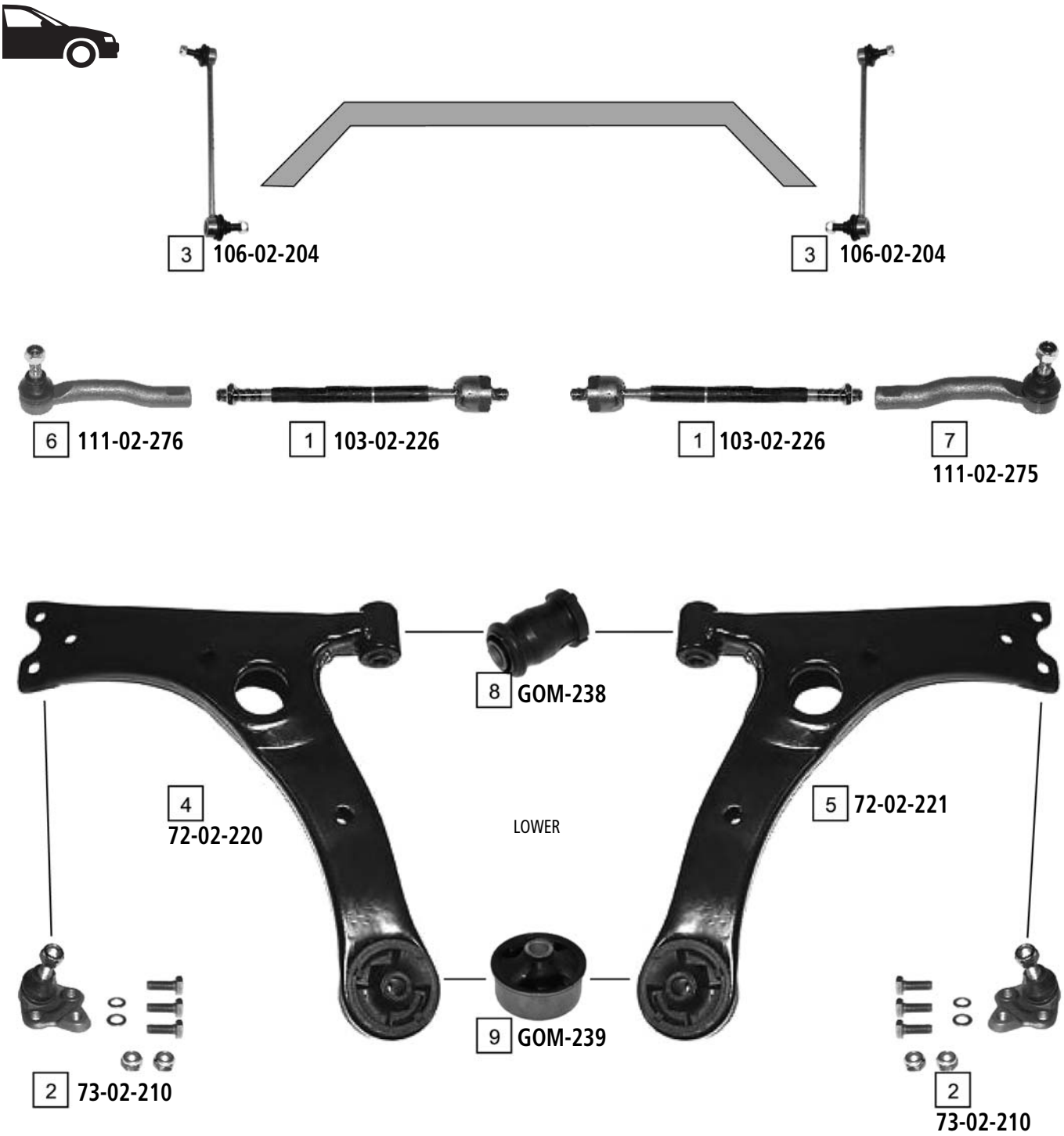

Ref	ASHIKA CODE	Description	OEM	Measures	Ref	ASHIKA CODE	Description	OEM	Measures
1	**103-02-226**	Axial Joint	45503-19255	th:MM14X1.5R L:273	6	**111-02-276**	Tie Rod End Left	45047-49045	c:12.6 th:FM14X1.5R
2	**73-02-210**	Ball Joint	43330 19115	c:15.3	7	**111-02-275**	Tie Rod End Right	45046-49115	c:12.6 th:FM14X1.5R
3	**106-02-204**	Stabiliser Link	48820 47010	L:285	8	**GOM-238**	Silentblock For Susp.Arm	Part of 72-02-220/72-02-221	d:34.5
4	**72-02-220**	TCA Left	48069-12260	c.15	9	**GOM-239**	Silentblock For Susp.Arm	Part of 72-02-220/72-02-221	d:68.3
5	**72-02-221**	TCA Right	48068-12260	c:15					

COROLLA VERSO (AUR10-CUR10-ZNR1_) **04/2004 ->**

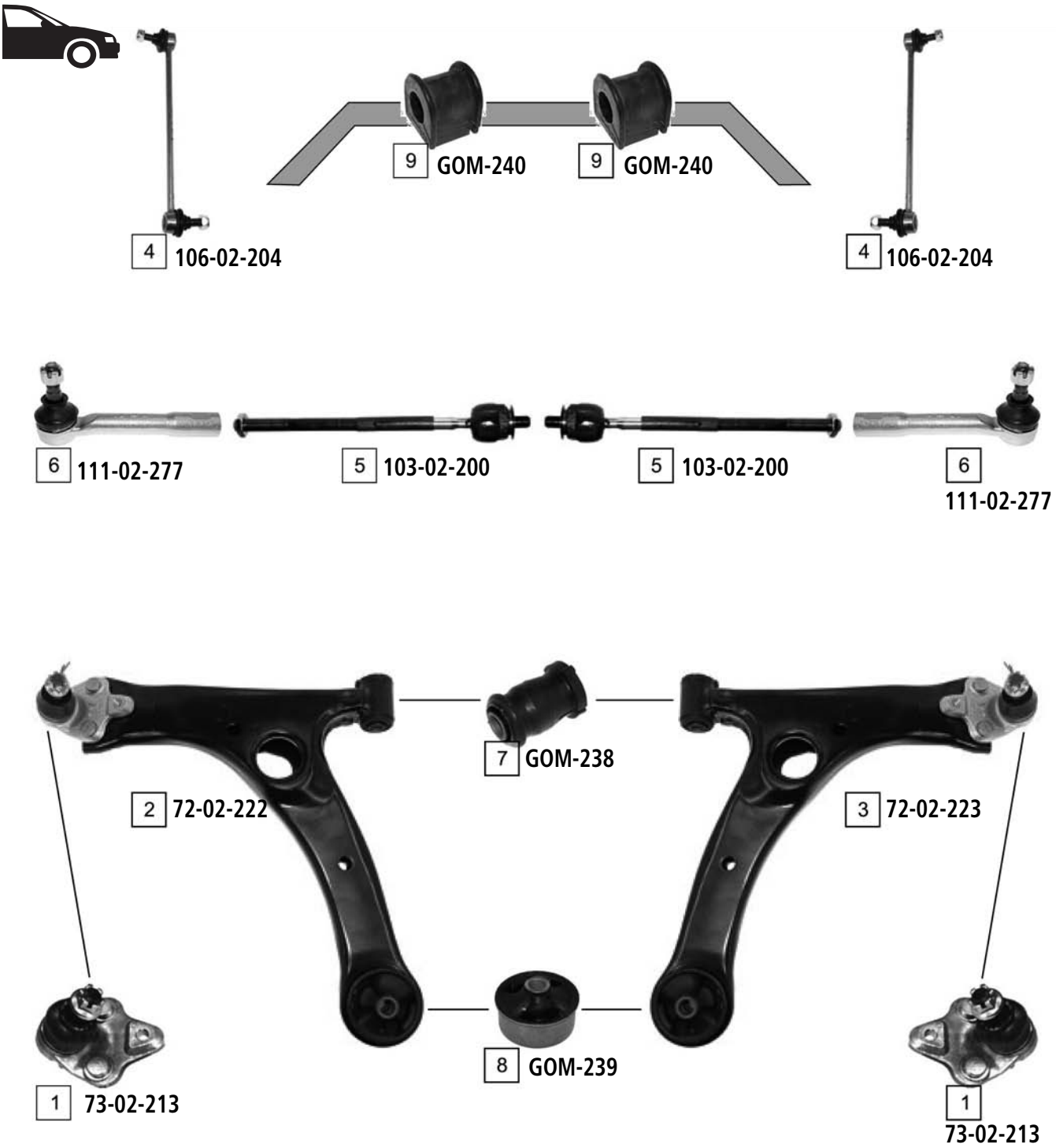

Ref	ASHIKA CODE	Description	OEM	Measures	Ref	ASHIKA CODE	Description	OEM	Measures
1	**73-02-213**	Ball Joint	43330 09360	c:17.6	6	**111-02-277**	Tie Rod End	45046 09430	c:12.6 th:FM16X1.5R
2	**72-02-222**	TCA Left Wbj	48069 0F010	c.17.6	7	**GOM-238**	Silentblock For Susp.Arm	Part of 72-02-222/72-02-223	d:34.5
3	**72-02-223**	TCA Right Wbj	48068 0F010	c:17.6	8	**GOM-239**	Silentblock For Susp.Arm	Part of 72-02-222/72-02-223	d:68.3
4	**106-02-204**	Stabiliser Link	48820 47010	L:285	9	**GOM-240**	Stabiliser Mounting	48815 0F010	d:42
5	**103-02-200**	Axial Joint	45503 0F010						

O.E.M. names and numbers are used for reference purposes only Ashika assumes no responsibility for possible errors

HIACE II (_H5_,_H6_,_H7_) **12/1982 - 07/1989**

8 **27-02-212**

7 **59-02-236**

2 **111-02-226**

1 **111-02-232**

1 **111-02-232**

2 **111-02-226**

UPPER EXC 4X4

3 **73-02-220**

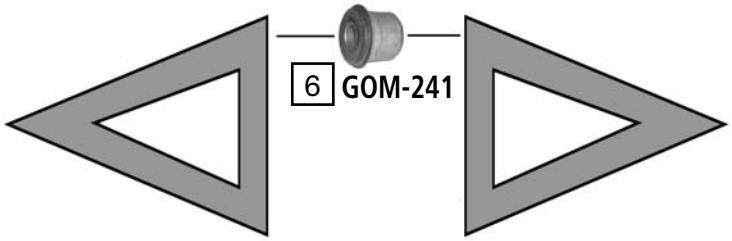

6 **GOM-241**

3 **73-02-220**

LOWER EXC 4X4

4 **53-02-221**

4 **53-02-221**

LOWER 4X4

5 **53-02-228**

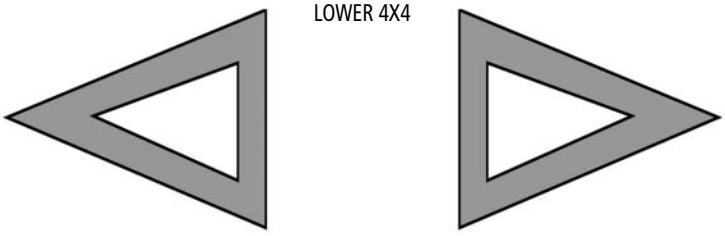

5 **53-02-228**

Ref	ASHIKA CODE	Description	OEM	Measures	Ref	ASHIKA CODE	Description	OEM	Measures
1	**111-02-232**	Tie Rod End	45406-29145	c:14.7 th:MM17X1.5R	5	**53-02-228**	Ball Joint	43330-39195	c:18.2
2	**111-02-226**	Tie Rod End	45046-29115	c:14.8 th:MM17X1.5L	6	**GOM-241**	Silentblock For Susp.Arm	48632 26010	d:46.2
3	**73-02-220**	Ball Joint	43360-29076	c:17.2	7	**59-02-236**	Pitman Arm	45490-29465	
4	**53-02-221**	Ball Joint	43330 29125	c:18	8	**27-02-212**	Tie Rod End	45450-29155	

HIACE III (_H10_,_H11_) **08/1989 - 07/1995**

1 **111-02-270**

2 **103-02-217**

2 **103-02-217**

1 **111-02-270**

3 **73-02-234**

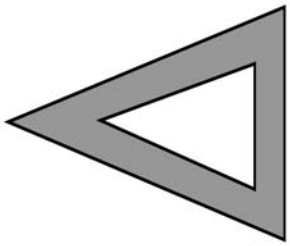

UPPER

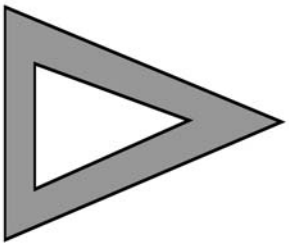

3 **73-02-234**

4 **53-02-221**

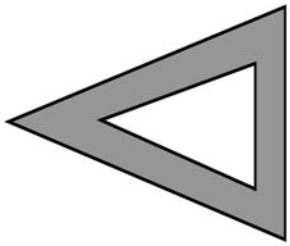

LOWER

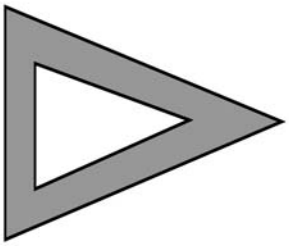

4 **53-02-221**

Ref	ASHIKA CODE	Description	OEM	Measures	Ref	ASHIKA CODE	Description	OEM	Measures
1	**111-02-270**	Tie Rod End	45046-29215	c: 14.7 th: FM17X1.5R	3	**73-02-234**	Ball Joint Upper	43350-29065	c:17.2
2	**103-02-217**	Axial Joint	45503-29255	th:MM14X1.5R L:277	4	**53-02-221**	Ball Joint	43330 29125	c:18

O.E.M. names and numbers are used for reference purposes only Ashika assumes no responsibility for possible errors

HIACE IV (_H1_,_H2,_) **08/1995 - 01/2007**

4 106-02-222

5 106-02-221

3 111-02-281

EXC 4X4

2 103-02-227

2 103-02-227

3 111-02-281

UPPER

12 GOM-241

6 72-02-224

8 GOM-242

7 72-02-225

LOWER

9 GOM-263

10 71-02-202

11 71-02-201

1 53-02-221

1 53-02-221

Ref	ASHIKA CODE	Description	OEM	Measures	Ref	ASHIKA CODE	Description	OEM	Measures
1	**53-02-221**	Ball Joint	43330 29125	c:18	7	**72-02-225**	TCA Right	48066 29075	c:17
2	**103-02-227**	Axial Joint	45503 29565	th:MM14X1.5R L:275	8	**GOM-242**	Silentblock For Susp.Arm	48635 26010	
3	**111-02-281**	Tie Rod End	45046 29325		9	**GOM-263**	Silentblock For Susp.Arm	48061 26050	
4	**106-02-222**	Stabiliser Link Left	48810 26020	L:75	10	**71-02-202**	TCA Left	48069 26130	
5	**106-02-221**	Stabiliser Link Right	48820 26020	L:75	11	**71-02-201**	TCA Right	48068 26130	
6	**72-02-224**	TCA Left	48067 29075	c.17	12	**GOM-241**	Silentblock For Susp.Arm	48632 26010	d.46.2

HILUX (_N3_,_N4_,_N5_) 2X4 — **08/1978 - 07/1988**

9 **59-02-244**

10 **59-02-215**

11 **59-02-239**

1 **111-02-226**

2 **111-02-227**

2 **111-02-227**

1 **111-02-226**

06/1983-> UPPER

5 **73-02-214**

6 **GOM-211**

5 **73-02-214**

06/1983-> LOWER

4 **53-02-215**

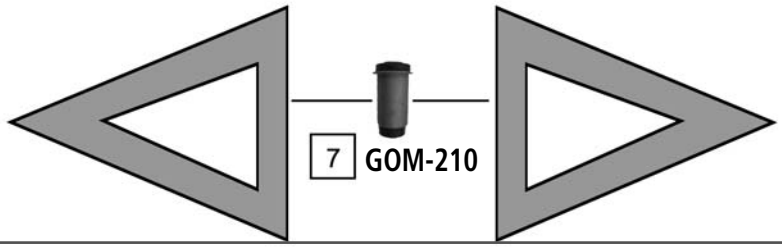

7 **GOM-210**

4 **53-02-215**

-> 05/1983 LOWER

3 **73-02-203**

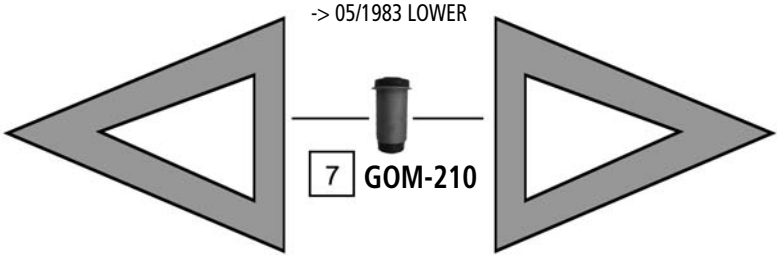

7 **GOM-210**

3 **73-02-203**

8 **52-02-236**

Ref	ASHIKA CODE	Description	OEM	Measures	Ref	ASHIKA CODE	Description	OEM	Measures
1	**111-02-226**	Tie Rod End	45046-29115	c:14.8 th:MM17X1.5L	7	**GOM-210**	Silentblock For Susp.Arm	48654-35010	d:40.5
2	**111-02-227**	Tie Rod End	45406-29115	c:14.8 th:MM17X1.5R	8	**52-02-236**	Tie Rod End	45401-35240	
3	**73-02-203**	Ball Joint	4335039016	c:15	9	**59-02-244**	Pitman Arm	45490-39255	
4	**53-02-215**	Ball Joint	43330 39145	c:17.9	10	**59-02-215**	Pitman Arm	45490-35140	
5	**73-02-214**	Ball Joint	43350-39035	c:15	11	**59-02-239**	Pitman Arm	45490-35130	
6	**73-02-214**	Silentblock For Susp.Arm	48632-30020	d:36.5 - 38					

O.E.M. names and numbers are used for reference purposes only Ashika assumes no responsibility for possible errors

HILUX (_N8_,_N9_,_N11_) 2X4 **08/1988 - 07/1997**

1 **111-02-226**

2 **111-02-227**

2 **111-02-227**

1 **111-02-226**

10 **108-02-203**

10 **108-02-203**

4 **73-02-227**

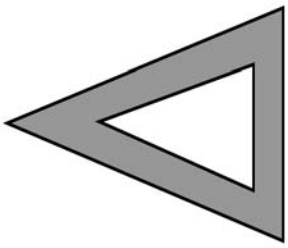

UPPER

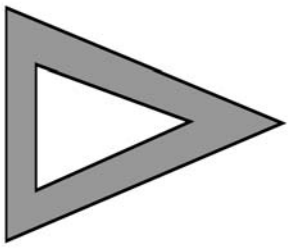

4 **73-02-227**

3 **53-02-235**

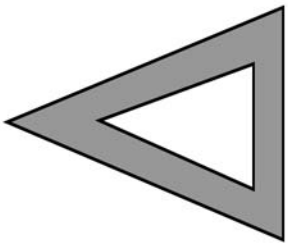

LOWER

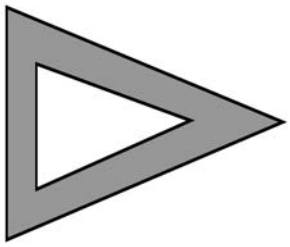

3 **53-02-235**

5 **27-02-201**
03/1989 ->

6 **27-02-210**

7 **59-02-215**

8 **59-02-239**

9 **59-02-240**

Ref	ASHIKA CODE	Description	OEM	Measures	Ref	ASHIKA CODE	Description	OEM	Measures
1	**111-02-226**	Tie Rod End	45046-29115	c.14.8 th:MM17X1.5L	6	**27-02-210**	Tie Rod End	45450-39165	
2	**111-02-227**	Tie Rod End	45406-29115	c.14.8 th:MM17X1.5R	7	**59-02-215**	Pitman Arm	45490-35140	
3	**53-02-235**	Ball Joint	43330-39295	c:18.2	8	**59-02-239**	Pitman Arm	45490-35130	
4	**73-02-227**	Ball Joint	43350-39045	c:17.1	9	**59-02-240**	Pitman Arm	45490-39315	
5	**27-02-201**	Tie Rod End	45450-39065		10	**108-02-203**	Tie Rod End	45490-39225	

HILUX (_N6_,_N10_,_N11_,_N12_,_N13_) 4X4 **08/1985 ->**

1 **111-02-226**

08/1991 ->

2 **73-02-292**

2 **73-02-292**

1 **111-02-226**

4 **73-02-227**

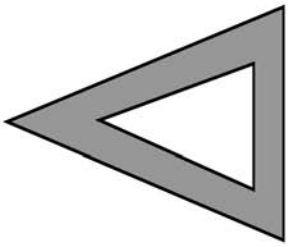

UPPER

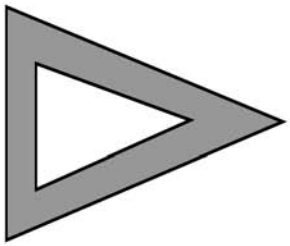

4 **73-02-227**

-> 03/1989

3 **53-02-228**

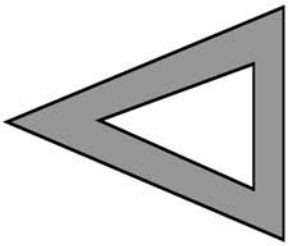

LOWER

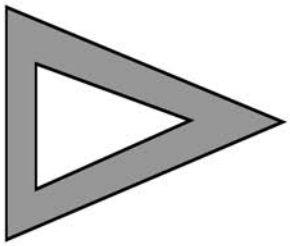

3 **53-02-228**

04/1989 ->

5 **53-02-295**

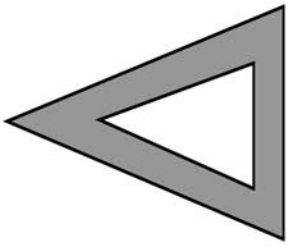

LOWER

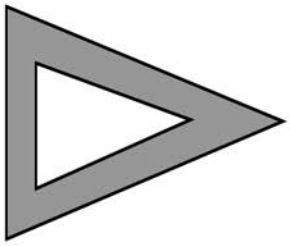

5 **53-02-295**

6 **27-02-201**

7 **27-02-210**

Ref	ASHIKA CODE	Description	OEM	Measures	Ref	ASHIKA CODE	Description	OEM	Measures
1	**111-02-226**	Tie Rod End	45046-29115	c:14.8 th:MM17X1.5L	5	**53-02-295**	Ball Joint	43330-39265	c:18.1
2	**73-02-292**	Tie Rod End	45406 39165	c:14.7 th:FM17X1.5R	6	**27-02-201**	Tie Rod End	45450-39065	
3	**53-02-228**	Ball Joint	43330-39195	c:18.2	7	**27-02-210**	Tie Rod End	45450-39165	
4	**73-02-227**	Ball Joint	43350-39045	c:17.1					

O.E.M. names and numbers are used for reference purposes only Ashika assumes no responsibility for possible errors

HILUX VIGO 01/2006 ->

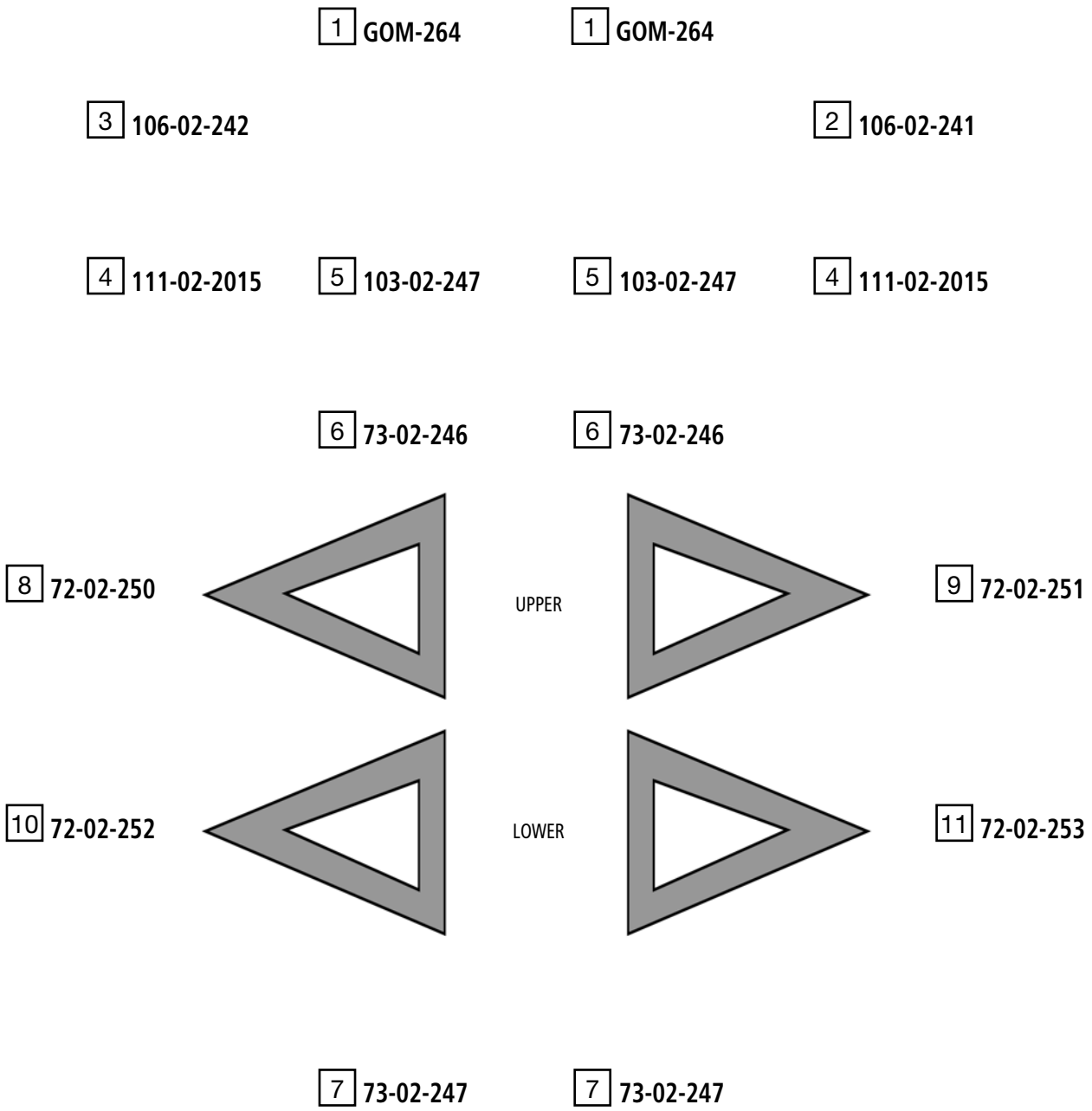

Ref	ASHIKA CODE	Description	OEM	Measures	Ref	ASHIKA CODE	Description	OEM	Measures
1	GOM-264	Stabiliser Mounting	48815-0K010		7	73-02-247	Ball Joint	43330-09510	
2	106-02-241	Stabiliser Link Right	48820-0K030		8	72-02-250	TCA Left	48630-0K040	
3	106-02-242	Stabiliser Link Left	48810-0K010		9	72-02-251	TCA Right	48610-0K040	
4	111-02-2015	Tie Rod End	45046-09281		10	72-02-252	TCA Left	48069-0K040	
5	103-02-247	Axial Joint	45503-09321		11	72-02-253	TCA Right	48068-0K040	
6	73-02-246	Ball Joint	43310-09015						

LANDCRUISER (FJ4_,_HJ45 , BJ4_) **03/1969 - 04/1986**

1 **111-02-217L**

2 **111-02-217R**

3 **111-02-209**

4 **111-02-221R**

5 **111-02-221L**

6 **111-02-217L**

Ref	ASHIKA CODE	Description	OEM	Measures	Ref	ASHIKA CODE	Description	OEM	Measures
1	**111-02-217L**	Tie Rod End	45046 60033	c:12.9 th:MM17X1.5R	4	**111-02-221R**	Tie Rod End	45046 69055	c:12.7 th.MM21X1.5L
2	**111-02-217R**	Tie Rod End	45045 60013	c:12.9 th:MM17X1.5L	5	**111-02-221L**	Tie Rod End	45046-69045	
3	**111-02-209**	Tie Rod End	45046 69035	c:12.9 th.MM21X1.5R	6	**111-02-217L**	Tie Rod End	45045-69015	

O.E.M. names and numbers are used for reference purposes only Ashika assumes no responsibility for possible errors

LANDCRUISER (BJ60, HJ6_, HJ45, FJ62) **08/1980 - 01/1990**

1 **111-02-285**
05/1989-01/1990

3 **111-02-248**
-> 05/1989

4 **111-02-247**

2 **111-02-245**

5 **111-02-249** 6 **111-02-250**
PER VEICOLI CON GUIDA A DX

Ref	ASHIKA CODE	Description	OEM	Measures	Ref	ASHIKA CODE	Description	OEM	Measures
1	**111-02-285**	Tie Rod End	45047 69066	c:14.5 th:MM23X1.5R	4	**111-02-247**	Tie Rod End	45046 69115	c:14.8 th:MM23X1.5L
2	**111-02-245**	Tie Rod End	45044 60H00	c.16.8 th:MM21X1.5L	5	**111-02-249**	Tie Rod End	45044-69065	
3	**111-02-248**	Tie Rod End	45047 69065	c.14.6 th:MM23X1.5R	6	**111-02-250**	Tie Rod End	45046-69105	

LANDCRUISER (RJ7_, LJ7_, BJ7_) **11/1984 - 01/1990**

1 **111-02-254**
BJ7_

5 **111-02-279**
RJ7_/LJ7_

4 **111-02-251**
RJ7_/LJ7_

6 **111-02-248**
BJ7_ -> 05/1989

2 **111-02-285**
BJ7_ 05/1989 ->

3 **111-02-256**
RJ7_/LJ7_

7 **111-02-247**
BJ7_ 05/1989 ->

6 **111-02-248**
RJ7_/LJ7_ -> 05/1989

2 **111-02-285**
RJ7_/LJ7_ 05/1989 ->

8 **GOM-209**

9 **GOM-243**

Ref	ASHIKA CODE	Description	OEM	Measures	Ref	ASHIKA CODE	Description	OEM	Measures
1	**111-02-254**	Tie Rod End Left	45044 60H03	c:16.65 th:MM21X1.5	6	**111-02-248**	Tie Rod End	45047 69065	c:14.6 th:MM23X1.5R
2	**111-02-285**	Tie Rod End	45047 69066	c:14.5 th:MM23X1.5R	7	**111-02-247**	Tie Rod End	45046 69115	c:14.8 th:MM23X1.5L
3	**111-02-256**	Tie Rod End Right	45046 69135	c:14.5 th:MM23X1.5L	8	**GOM-209**	Silentblock For Susp.Arm	48702 60020	d:65.4
4	**111-02-251**	Tie Rod End Left	45045 69065	c:14.8 th:MM21X1.5R	9	**GOM-243**	Silentblock For Susp.Arm	48702-60010	d:65.6
5	**111-02-279**	Tie Rod End Right	45044 69106	c.14.7 th:MM21X1.5L					

O.E.M. names and numbers are used for reference purposes only Ashika assumes no responsibility for possible errors

LANDCRUISER (KZJ7_,LJ7_, RJ7_) **01/1990 - 04/1996**

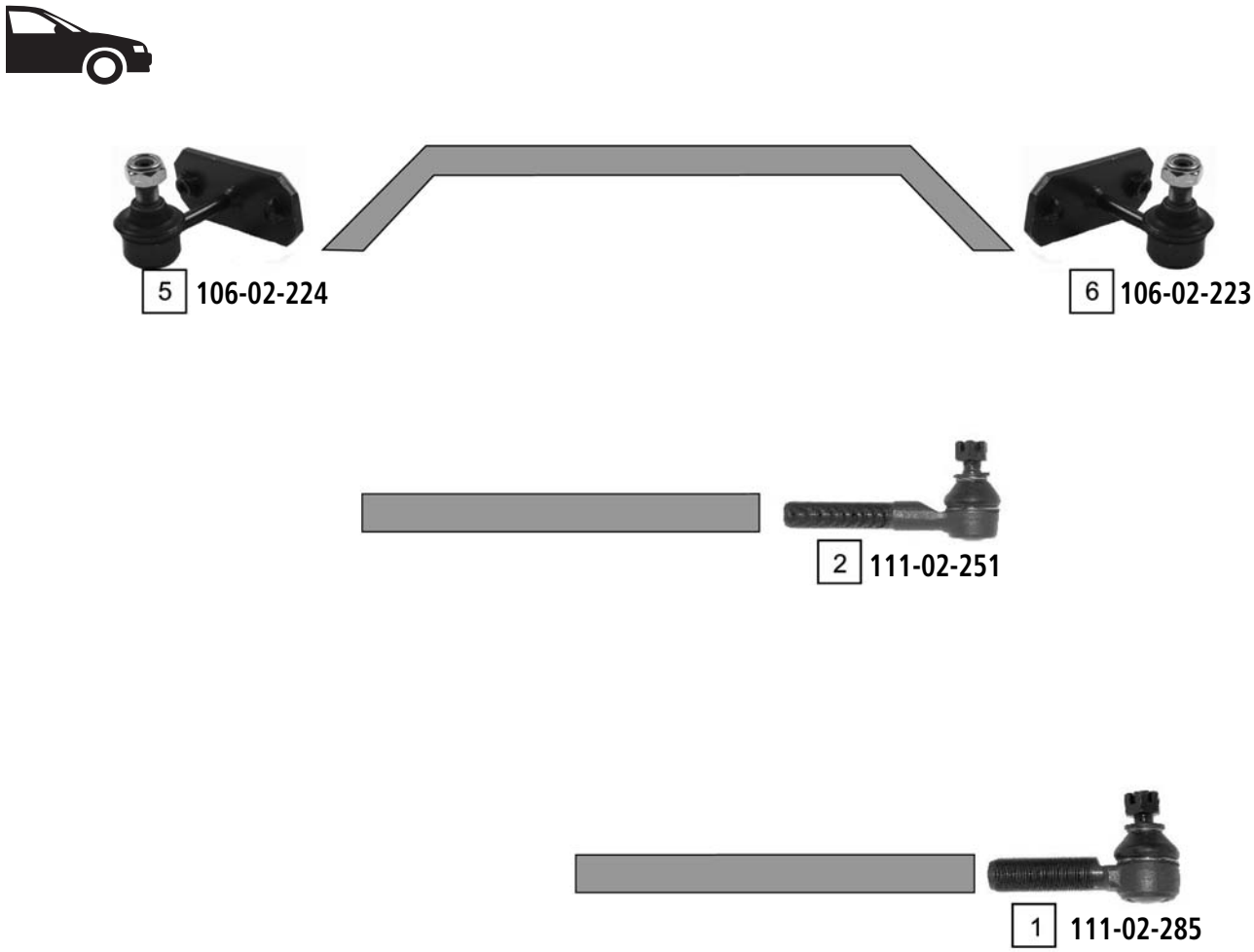

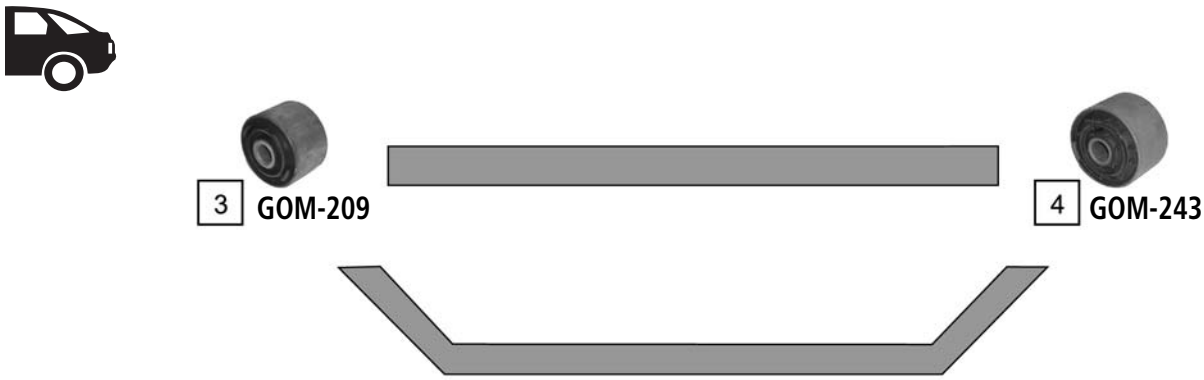

Ref	ASHIKA CODE	Description	OEM	Measures	Ref	ASHIKA CODE	Description	OEM	Measures
1	**111-02-285**	Tie Rod End	45047 69066	c.14.5 th:MM23X1.5R	4	**GOM-243**	Silentblock For Susp.Arm	48702-60010	d:65.6
2	**111-02-251**	Tie Rod End Left	45045 69065	c.14.8 th:MM21X1.5R	5	**106-02-224**	Stabiliser Link Left	48810 60010	
3	**GOM-209**	Silentblock For Susp.Arm	48702 60020	d:65.4	6	**106-02-223**	Stabiliser Link Right	48820 60010	

LANDCRUISER 80 (FJ80, FZJ80, HDJ80, HZJ80) 01/1990 - 01/1998

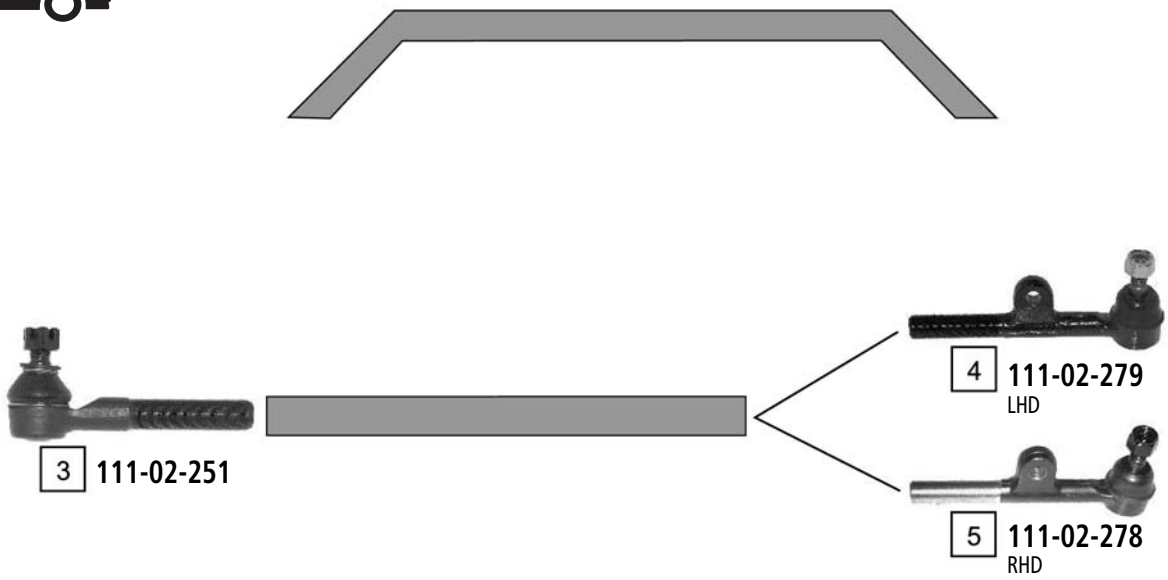

Ref	ASHIKA CODE	Description	OEM	Measures	Ref	ASHIKA CODE	Description	OEM	Measures
1	**111-02-285**	Tie Rod End	45047 69066	c.14.5 th:MM23X1.5R	4	**111-02-279**	Tie Rod End Right	45044 69106	c:14.7 th:MM21X1.5L
2	**111-02-256**	Tie Rod End Right	45046 69135	c.14.5 th:MM23X1.5L	5	**111-02-278**	Tie Rod End Right	45044 69115	c:14.6 th:MM21X1.5L
3	**111-02-251**	Tie Rod End Left	45045 69065	c:14.8 th:MM21X1.5R					

O.E.M. names and numbers are used for reference purposes only Ashika assumes no responsibility for possible errors

LANDCRUISER 90 (KDJ9_,KZJ9_,VZJ9_) **04/1996 - 09/2002**

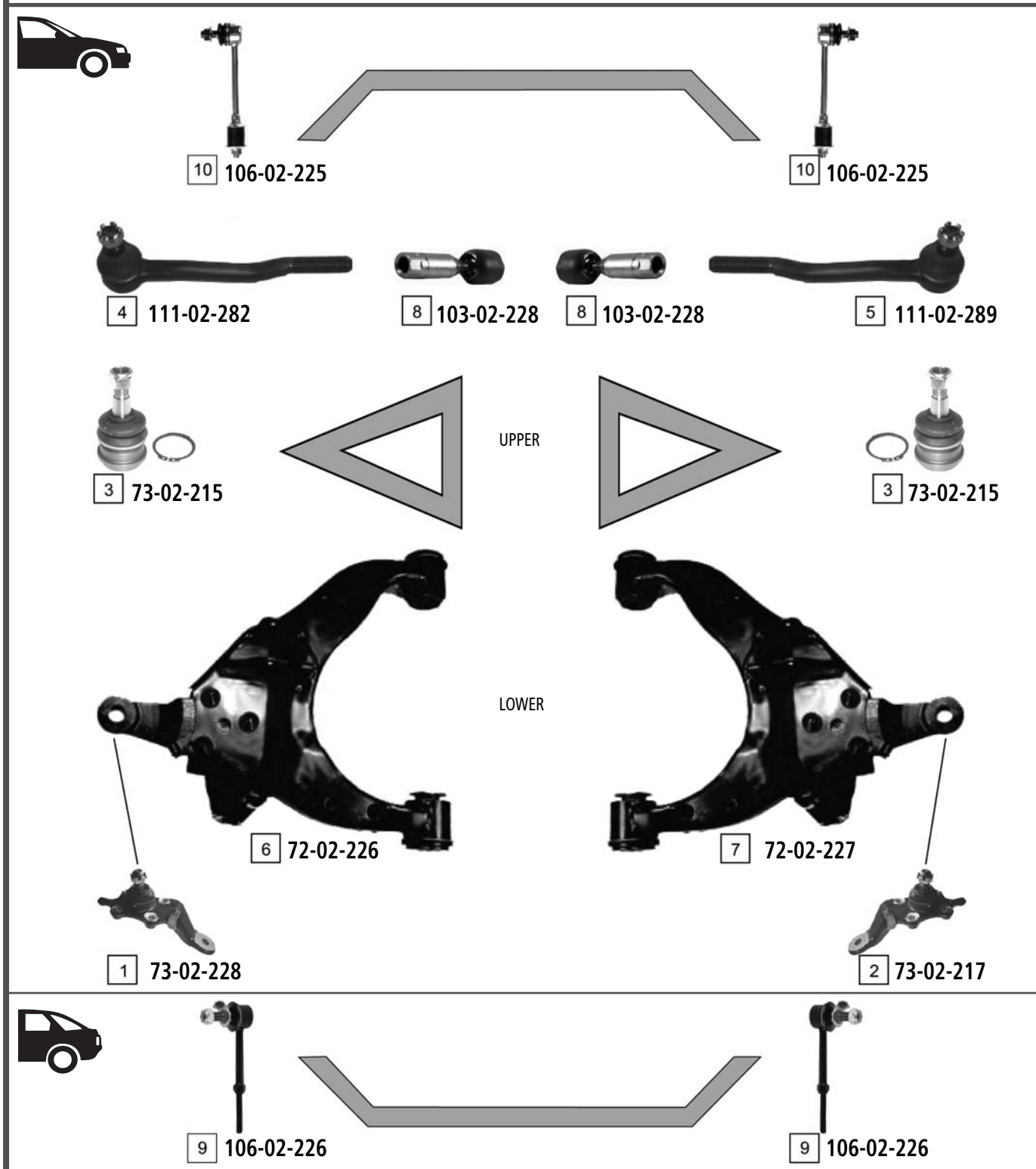

Ref	ASHIKA CODE	Description	OEM	Measures	Ref	ASHIKA CODE	Description	OEM	Measures
1	**73-02-228**	Ball Joint Left	43340 39325	c:17.6	6	**72-02-226**	Tca Wobj	48069 35080	
2	**73-02-217**	Ball Joint Right	43330 39415	c:17.6	7	**72-02-227**	Tca Wobj	48068 35080	
3	**73-02-215**	Ball Joint	43310 39016	c:15.75	8	**103-02-228**	Axial Joint	45503 39075	th:MM18X1.5R L.133
4	**111-02-282**	Tie Rod End Left	45047 39215	c:14.8 th:MM20X1.5R	9	**106-02-226**	Stabiliser Link	48830 35020	
5	**111-02-289**	Tie Rod End Right	45046 39335	c:14.8 th:MM20X1.5R	10	**106-02-225**	Stabiliser Link	48820 35030	

LANDCRUISER 100 (HDJ100 , UZJ100) 01/1998 ->

->08/2002

9 111-02-290

5 103-02-230

5 103-02-230

10 111-02-291

09/2002->

7 111-02-2000

6 103-02-234

6 103-02-234

8 111-02-2001

UPPER

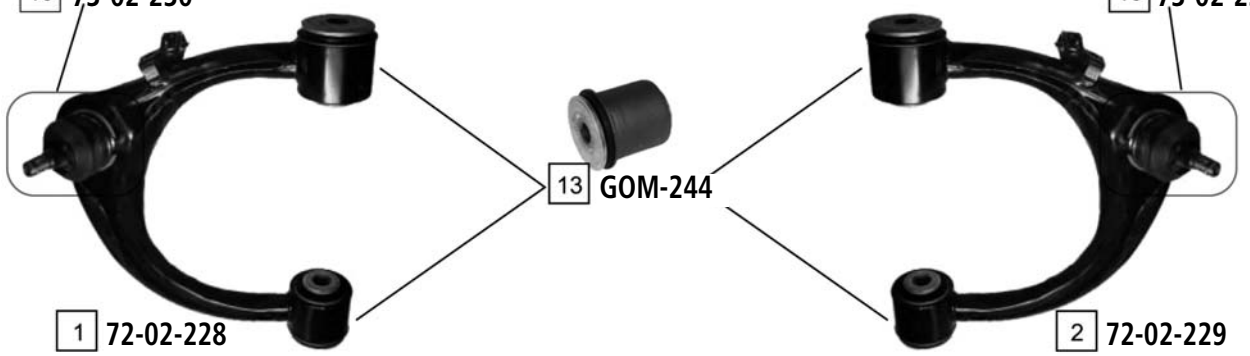

LOWER

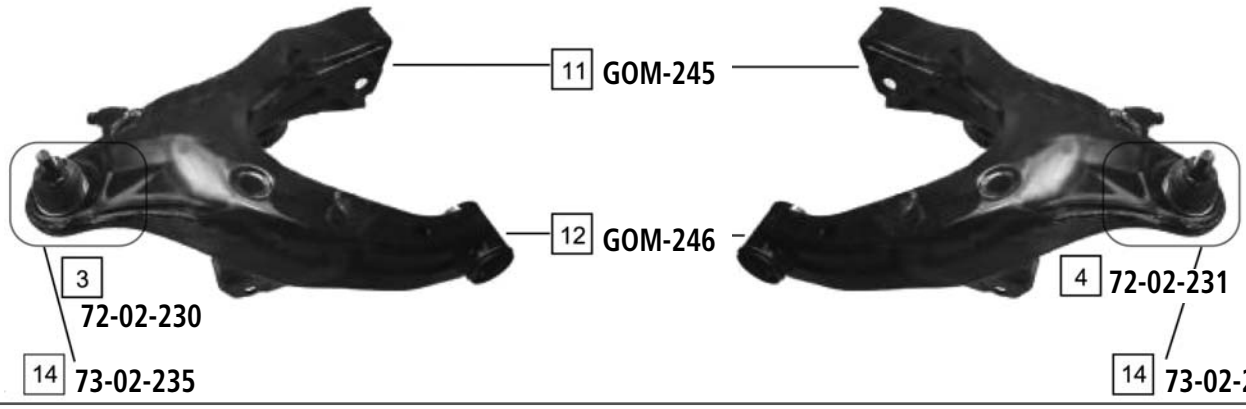

Ref	ASHIKA CODE	Description	OEM	Measures	Ref	ASHIKA CODE	Description	OEM	Measures
1	72-02-228	TCA	48630 60010		9	111-02-290	Tie Rod End	45047-69100	c:18.3 th:FM20X1.5R
2	72-02-229	TCA	48610 60030		10	111-02-291	Tie Rod End	45046-69195	c:18.3 th:FM20X1.5R
3	72-02-230	TCA	48640 60010		11	GOM-245	Silentblock For Susp.Arm	48655 60010	
4	72-02-231	TCA	48620 60010		12	GOM-246	Silentblock For Susp.Arm	48654 60010	d:48
5	103-02-230	Axial Joint	45503-69015	th:MM18X1.5R L:198	13	GOM-244	Silentblock For Susp.Arm	48632 60010	d.52.1
6	103-02-234	Axial Joint	45503 69025		14	73-02-235	Ball Joint	Part of 72-02-230/72-02-231	
7	111-02-2000	Tie Rod End Left	45047 69115		15	73-02-230	Ball Joint	Part of 72-02-228/72-02-229	
8	111-02-2001	Tie Rod End Right	45046 69205						

O.E.M. names and numbers are used for reference purposes only Ashika assumes no responsibility for possible errors

LANDCRUISER 120 (GRJ_, KDJ_) **09/2002 ->**

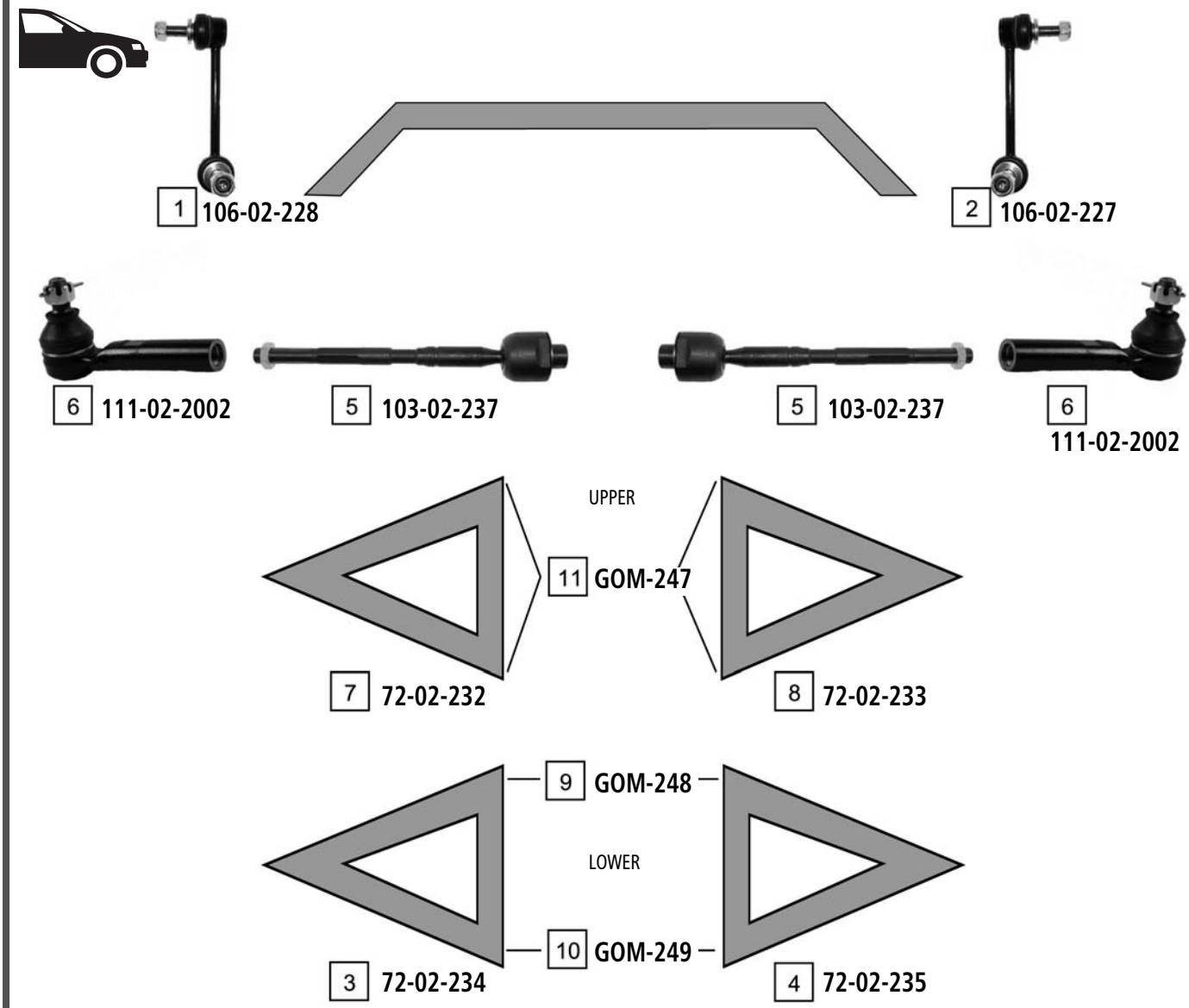

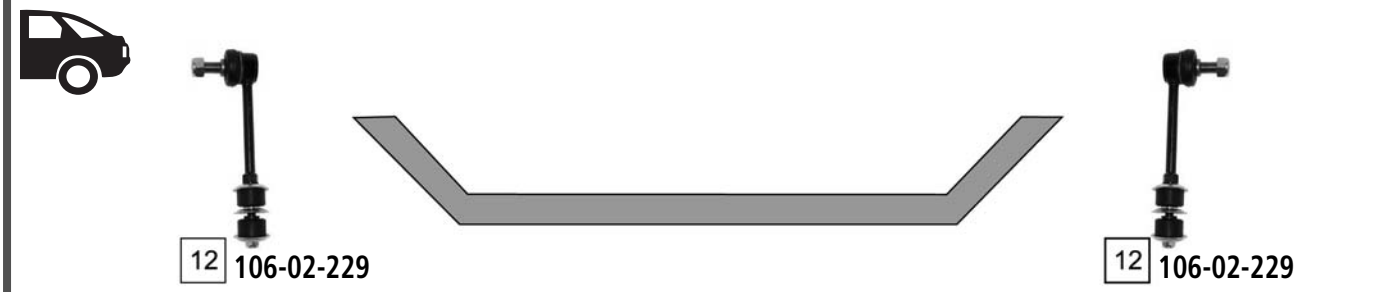

Ref	ASHIKA CODE	Description	OEM	Measures	Ref	ASHIKA CODE	Description	OEM	Measures
1	106-02-228	Stabiliser Link Left	48810 60040	L:140	7	72-02-232	TCA	48630 60020	
2	106-02-227	Stabiliser Link Right	48820 60050	L:140	8	72-02-233	TCA	48610 60050	
3	72-02-234	TCA	48069 60010		9	GOM-248	Silentblock For Susp.Arm	48654 60030	
4	72-02-235	TCA	48068 60010		10	GOM-249	Silentblock For Susp.Arm	48655 60030	
5	103-02-237	Axial Joint	45503 39235	th.MM22X1.5R L:260	11	GOM-247	Silentblock For Susp.Arm	48632 60020	
6	111-02-2002	Tie Rod End	45046 39505		12	106-02-229	Stabiliser Link	48830 60030	

LITEACE (_M2_) **10/1979 - 09/1986**

1 **111-02-205**
10/1982 ->

1 **111-02-205**
10/1982 ->

2 **73-02-229**

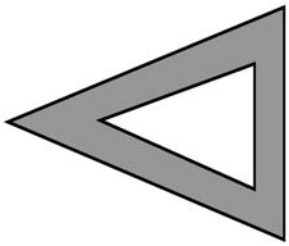

UPPER

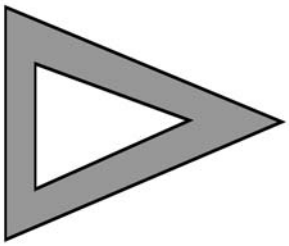

2 **73-02-229**

-> 09/1982

4 **53-02-235**

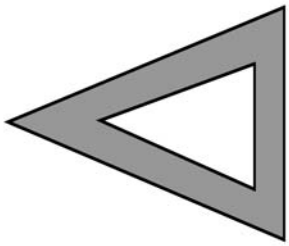

LOWER

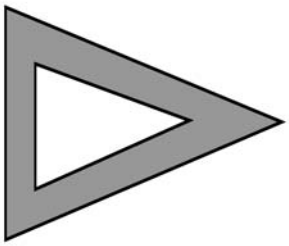

4 **53-02-235**

10/1982 ->

3 **73-06-625**

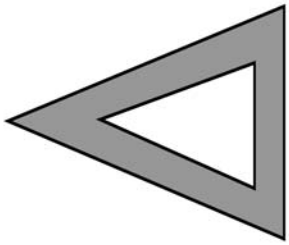

LOWER

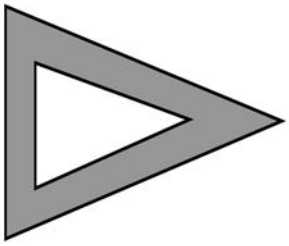

3 **73-06-625**

Ref	ASHIKA CODE	Description	OEM	Measures	Ref	ASHIKA CODE	Description	OEM	Measures
1	**111-02-205**	Tie Rod End	45046 19065	c:12.9 th:MM14X1.5L	3	**73-06-625**	Ball Joint	43340-29095	c:16.8
2	**73-02-229**	Ball Joint	43350 29076	c:15.2	4	**53-02-235**	Ball Joint	43330-39295	c:18.2

O.E.M. names and numbers are used for reference purposes only Ashika assumes no responsibility for possible errors

LITEACE (_M3_) **09/1985 - 01/1992**

-> 07/1988

1 **110-02-271**

4 **103-02-203** PS

4 **103-02-203** PS

1 **110-02-271**

08/1988 ->

5 **103-02-293** PS

5 **103-02-293** PS

2 **73-02-229**

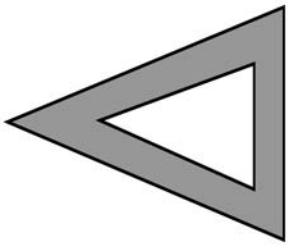

UPPER

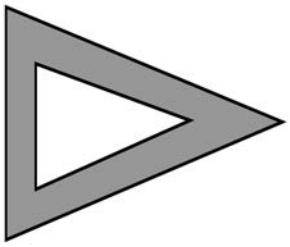

2 **73-02-229**

3 **73-02-265**

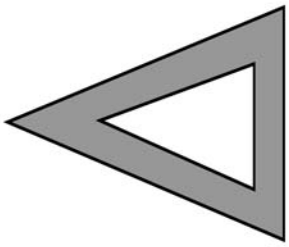

LOWER

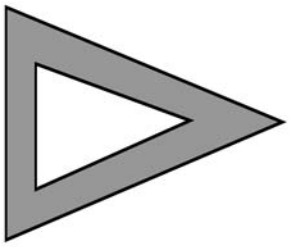

3 **73-02-265**

Ref	ASHIKA CODE	Description	OEM	Measures	Ref	ASHIKA CODE	Description	OEM	Measures
1	**110-02-271**	Tie Rod End	45460-29315	c:12.9 th:FM14X1.5R	4	**103-02-203**	Axial Joint	45503-29015	th:MM14X1.5R L:175
2	**73-02-229**	Ball Joint	43350 29076	c:15.2	5	**103-02-293**	Axial Joint	45503-29215	th:MM14X1.5R L:307
3	**73-06-625**	Ball Joint	43340-29095	c:16.8					

MR 2 (_W1_, _W2_) 06/1984 - 05/2000

1 **73-02-291**

3 **103-02-238**
12/1989 ->

3 **103-02-238**
12/1989 ->

1 **73-02-291**

2 **73-02-224**

2 **73-02-224**

Ref	ASHIKA CODE	Description	OEM	Measures	Ref	ASHIKA CODE	Description	OEM	Measures
1	**73-02-291**	Tie Rod End	45046-29135	c:12.6 th:FM12X1.25	3	**103-02-238**	Axial Joint	45503 19145	th.MM12X1.25R L:288
2	**73-02-224**	Ball Joint Lower	43330-19025	c:14.3					

O.E.M. names and numbers are used for reference purposes only Ashika assumes no responsibility for possible errors

PASEO (EL54) **08/1995 - 07/1999**

2 **111-02-298**

1 **103-02-298**

1 **103-02-298**

2 **111-02-298**

4 **73-02-238L**

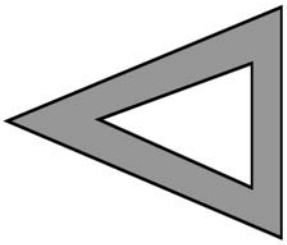

LOWER

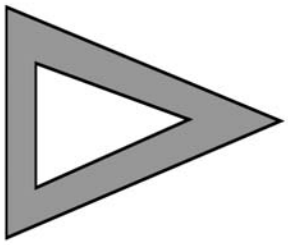

3 **73-02-238R**

Ref	ASHIKA CODE	Description	OEM	Measures	Ref	ASHIKA CODE	Description	OEM	Measures
1	**103-02-298**	Axial Joint	45503 19155	th:MM12X1.25R L:289	3	**73-02-238R**	Ball Joint	43330 19085	c:13.5
2	**111-02-298**	Tie Rod End	45046-19205	c:12.7 th:FM12X1.25	4	**73-02-238L**	Ball Joint	43340-19025	

PICNIC (_XM10) **05/1996 - 04/2001**

1 **111-02-293**

6 **76-02-298**

6 **76-02-298**

2 **111-02-297**

3 **72-02-236**

LOWER

4 **72-02-237**

5 **53-02-297**

5 **53-02-297**

Ref	ASHIKA CODE	Description	OEM	Measures	Ref	ASHIKA CODE	Description	OEM	Measures
1	**111-02-293**	Tie Rod End Left	45047-29075	c:12.6 th:FM15X1.5R	4	**72-02-237**	TCA	48068-44010	
2	**111-02-297**	Tie Rod End Right	45046-29275	c:12.6 th:FM15X1.5R	5	**53-02-297**	Ball Joint Lower	43330 09030	c:15
3	**72-02-236**	TCA	48069-44010		6	**76-02-298**	Axial Joint	45503 29435	th.MM14X1.5R L:240

O.E.M. names and numbers are used for reference purposes only Ashika assumes no responsibility for possible errors

PREVIA (TCR1_, 2_) **05/1990 - 08/2000**

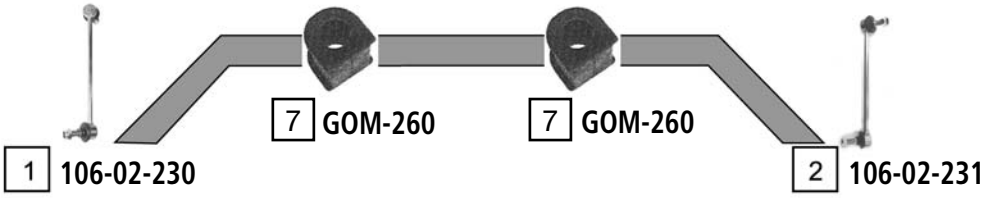

5 111-02-2004

4 103-02-239

4 103-02-239

6 111-02-2003

3 73-02-236

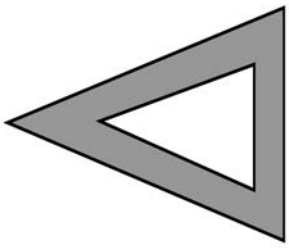

LOWER

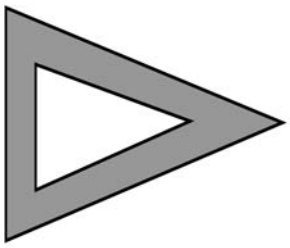

3 73-02-236

Ref	ASHIKA CODE	Description	OEM	Measures	Ref	ASHIKA CODE	Description	OEM	Measures
1	**106-02-230**	Stabiliser Link Left	48810 28020	L:255	5	**111-02-2004**	Tie Rod End	45047 29065	c:12.4 th:FM14X1.5R
2	**106-02-231**	Stabiliser Link Right	48820 28010	L:255	6	**111-02-2003**	Tie Rod End	45046 29235	c:12.4 th:FM14X1.5R
3	**73-02-236**	Ball Joint	43330-29235	c:17	7	**GOM-260**	Stabiliser Mounting	48815 28061	-
4	**103-02-239**	Axial Joint	45503-29295	th:MM14X1.5R L.215					

PREVIA ESTIMA (ACR3_) **08/2000 - 04/2006**

1 106-02-218

1 106-02-218

6 111-02-2006

8 103-02-240

8 103-02-240

7 111-02-2005

4 72-02-238

2 73-02-208

LOWER

5 72-02-239

3 73-02-209

Ref	ASHIKA CODE	Description	OEM	Measures	Ref	ASHIKA CODE	Description	OEM	Measures
1	**106-02-218**	Stabiliser Link	48820 28050	L:260	5	**72-02-239**	Susp.Arm W/O Ball Joint	48068-28120	
2	**73-02-208**	Ball Joint Left	43340-29175	c:17.6	6	**111-02-2006**	Tie Rod End	45470-29185	
3	**73-02-209**	Ball Joint Right	43330-29405	c.17.6	7	**111-02-2005**	Tie Rod End	45460-29425	
4	**72-02-238**	Susp.Arm W/O Ball Joint	48069-28120		8	**103-02-240**	Axial Joint	45504-28030	th:MM14X1.5R L:235

O.E.M. names and numbers are used for reference purposes only Ashika assumes no responsibility for possible errors

RAV 4 I (SXA1_) 04/1994 - 06/2000

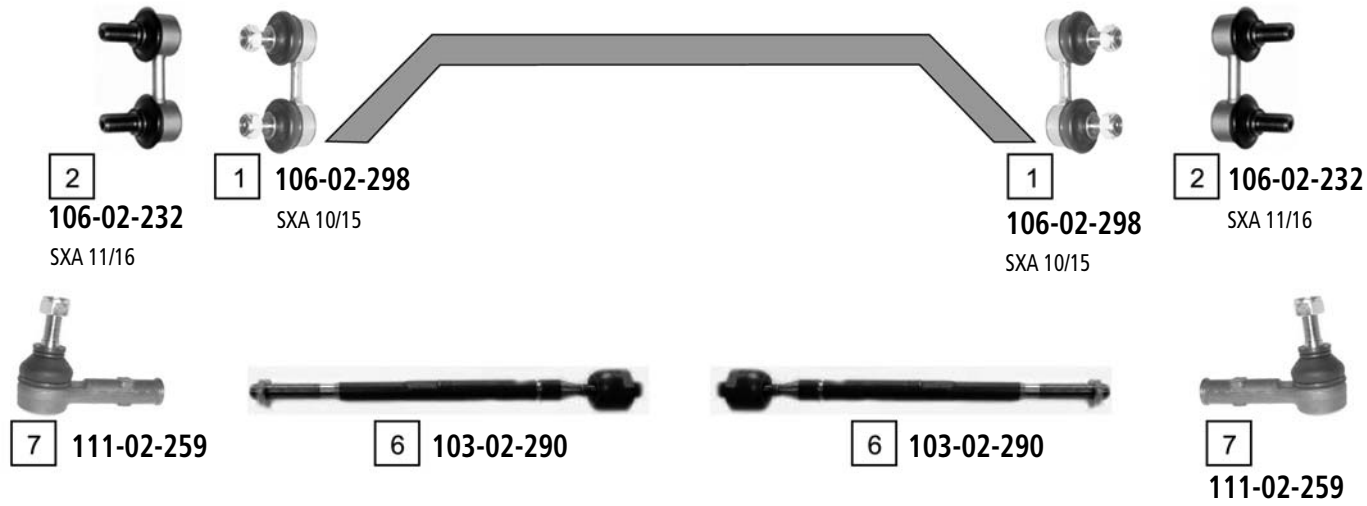

Ref	ASHIKA CODE	Description	OEM	Measures	Ref	ASHIKA CODE	Description	OEM	Measures
1	**106-02-298**	Stabiliser Link	48820 33010	L:60.5	5	**72-02-241**	TCA Right	48068 42010	
2	**106-02-232**	Stabiliser Link	48820 42010	L:63	6	**103-02-290**	Axial Joint	45503-29365	th:MM14X1.5R L:315
3	**73-02-241**	Ball Joint	43330-49025	c:17.5	7	**111-02-259**	Tie Rod End	45046 19175	c:12.7 th:FM14X1.5R
4	**72-02-240**	TCA Left	48069 42010		8	**GOM-220**	Stabiliser Mounting	48815-10060	

RAV 4 II (XA2) 07/2000 - 03/2006

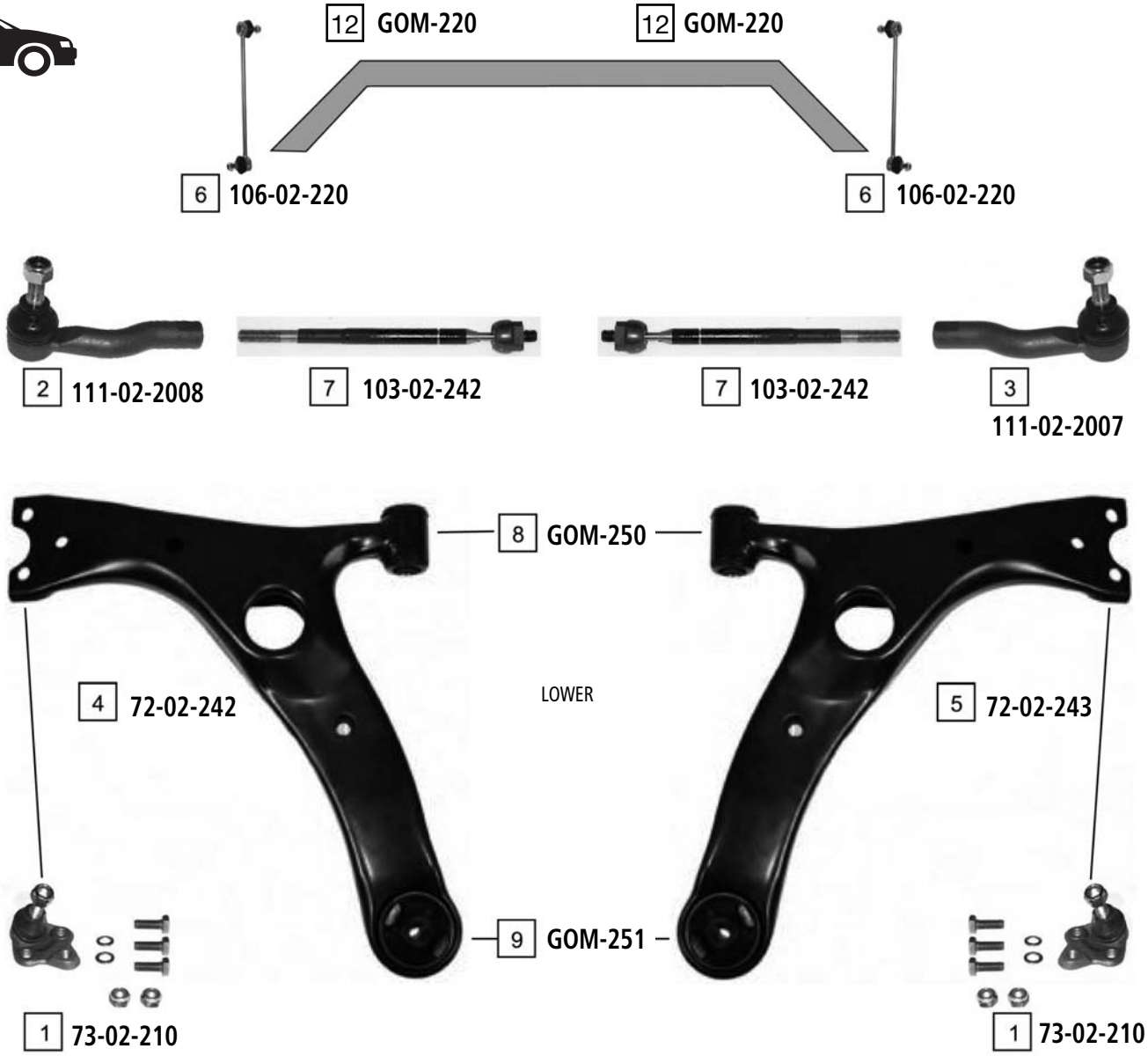

Ref	ASHIKA CODE	Description	OEM	Measures	Ref	ASHIKA CODE	Description	OEM	Measures
1	**73-02-210**	Ball Joint	43330 19115	c:15.3	7	**103-02-242**	Axial Joint	45503-49055	th:MM14X1.5R L:297
2	**111-02-2008**	Tie Rod End Left	45047-49025	c.12.7 th:FM15X1.25	8	**GOM-250**	Silentblock For Susp.Arm	Part of 72-02-242/72-02-243	
3	**111-02-2007**	Tie Rod End Right	45046-49095	c.12.7 th:FM15X1.5R	9	**GOM-251**	Silentblock For Susp.Arm	Part of 72-02-242/72-02-243	
4	**72-02-242**	TCA Left Wbj	48069-42040		10	**106-02-234**	Stabiliser Link Left	48840 42010	L:100
5	**72-02-243**	TCA Right Wbj	48068-42040		11	**106-02-233**	Stabiliser Link Right	48830 42010	L:100
6	**106-02-220**	Stabiliser Link	48820 32010	L:285	12	**GOM-220**	Stabiliser Mounting	48815-10060	

O.E.M. names and numbers are used for reference purposes only Ashika assumes no responsibility for possible errors

RAV 4 III (ACA3_,ALA30,GSA33) 03/2006 ->

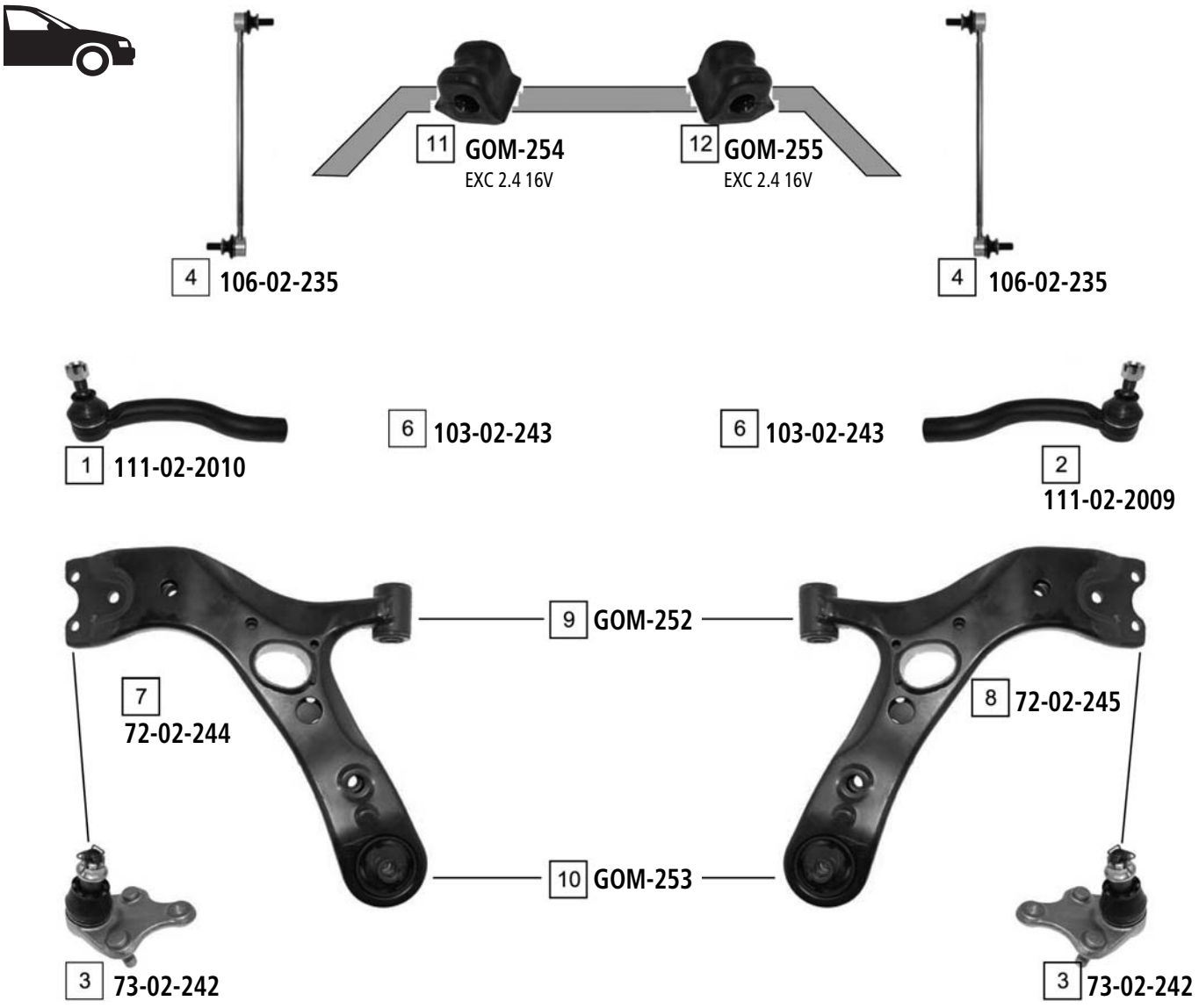

Ref	ASHIKA CODE	Description	OEM	Measures	Ref	ASHIKA CODE	Description	OEM	Measures
1	111-02-2010	Tie Rod End Left	45047 49135	c:16.3 th:FM16X1.5R	7	72-02-244	TCA Left Wbj	48069 42050	
2	111-02-2009	Tie Rod End Right	45046 49195	c:16.3 th:FM16X1.5R	8	72-02-245	TCA Right Wbj	48068 42050	
3	73-02-242	Ball Joint	43330 49095	c:17.7	9	GOM-252	Silentblock For Susp.Arm	Part of 72-02-244/72-02-245	
4	106-02-235	Stabiliser Link	48820 42030	L:360	10	GOM-253	Silentblock For Susp.Arm	Part of 72-02-244/72-02-245	
5	106-02-236	Stabiliser Link	48830 42020		11	GOM-254	Stabiliser Mounting	48815 42090	d:23
6	103-02-243	Axial Joint	Part of	th:MM16X1.5R	12	GOM-255	Stabiliser Mounting	48815 42100	d.23

STARLET (_P7_) **10/1984 - 12/1989**

1 **111-02-266**

2 **103-02-211**

2 **103-02-211**

1 **111-02-266**

3 **53-02-298**

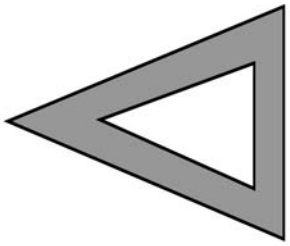

LOWER

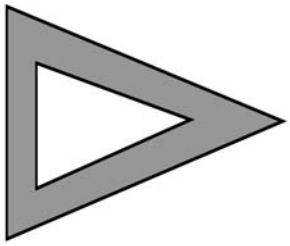

3 **53-02-298**

Ref	ASHIKA CODE	Description	OEM	Measures	Ref	ASHIKA CODE	Description	OEM	Measures
1	**111-02-266**	Tie Rod End	45504619165	c:12.8 th:FM12X1.25	3	**53-02-298**	Ball Joint Lower	43330-19075	c:14.1
2	**103-02-211**	Axial Joint	45503-19075	th: MM12X1.25R L:271					

O.E.M. names and numbers are used for reference purposes only Ashika assumes no responsibility for possible errors

STARLET (_P8_) 12/1989 - 03/1996
STARLET (EP91) 04/1996 - 03/1999

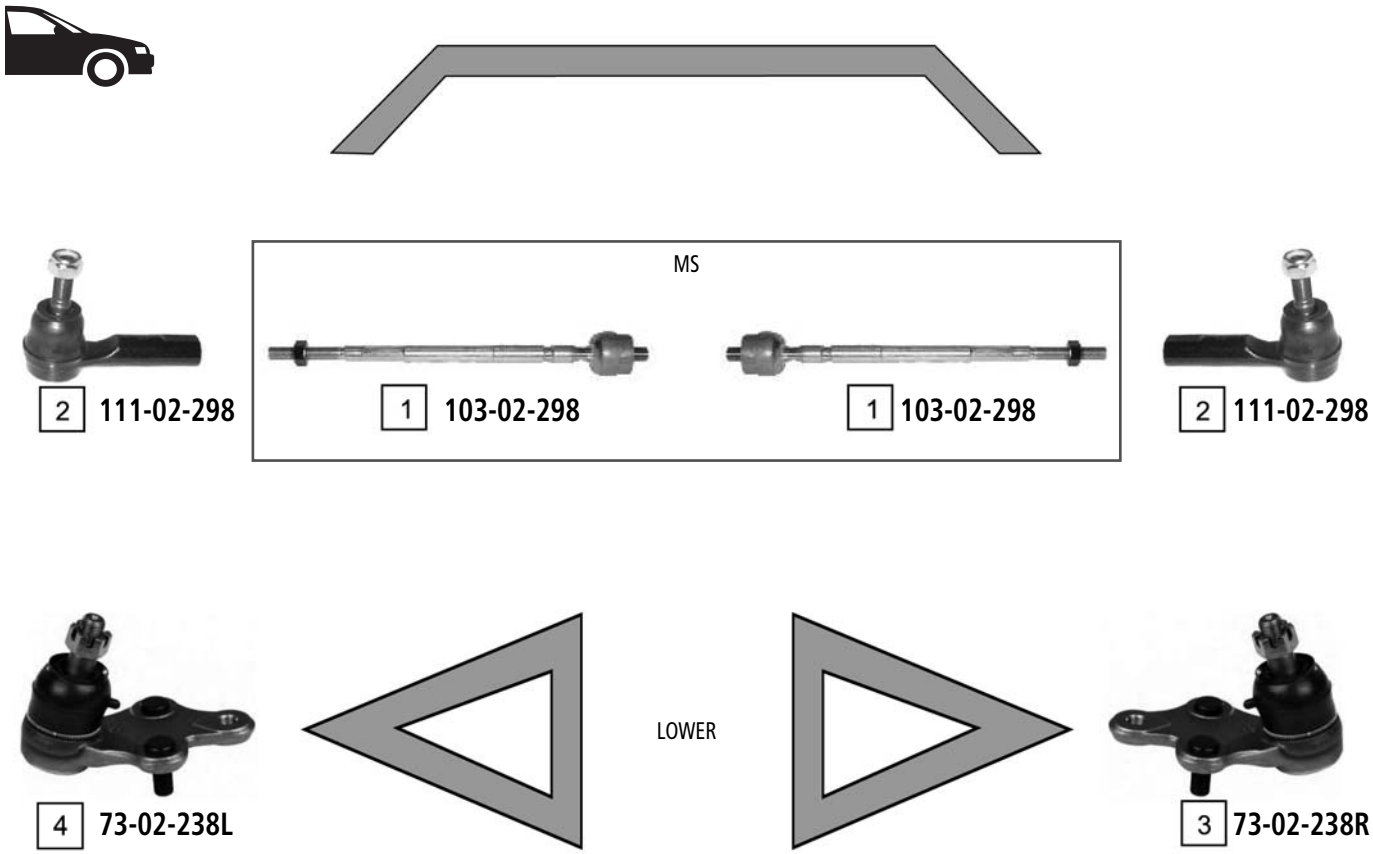

Ref	ASHIKA CODE	Description	OEM	Measures	Ref	ASHIKA CODE	Description	OEM	Measures
1	**103-02-298**	Axial Joint	45503 19155	th.MM12X1.25R L.289	3	**73-02-238R**	Ball Joint	43330 19085	c.13.5
2	**111-02-298**	Tie Rod End	45046-19205	c:12.7 th:FM12X1.25	4	**73-02-238L**	Ball Joint	43340-19025	

SUPRA (JZA80) **05/1993 - 08/1998**

1 106-02-237

1 106-02-237

2 111-02-2012

3 111-02-2011

4 106-02-238

4 106-02-238

Ref	ASHIKA CODE	Description	OEM	Measures	Ref	ASHIKA CODE	Description	OEM	Measures
1	**106-02-237**	Stabiliser Link	48810-28010	L:111	3	**111-02-2011**	Tie Rod End Right	45460-19235	c.12.9 th:MM17X1.5L
2	**111-02-2012**	Tie Rod End Left	45470-19065	c:12.9 th.MM17X1.5L	4	**106-02-238**	Stabiliser Link	48820-24010	L:111

O.E.M. names and numbers are used for reference purposes only Ashika assumes no responsibility for possible errors

YARIS (_CP10) 04/1999 - 12/2005
YARIS VERSO (NC/LP2_) 11/1999 - 12/2005

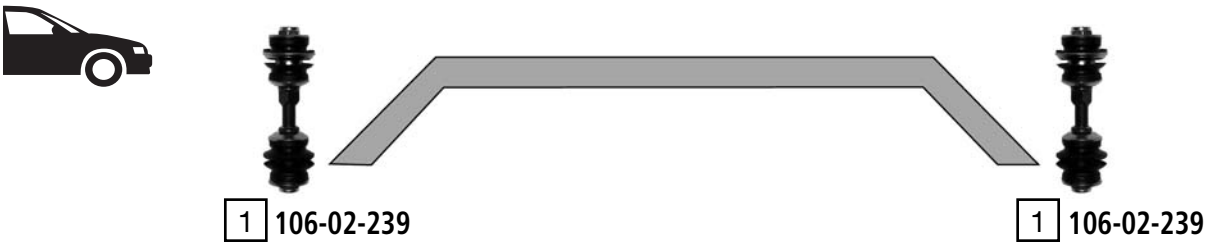

-> 02/2003

02/2003 ->
EXC TYRE 185/55/15

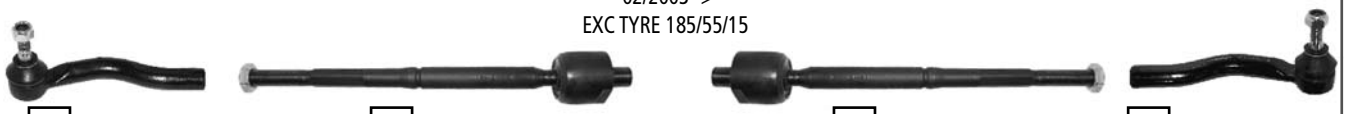

02/2003 ->
TYRE 185/55/15

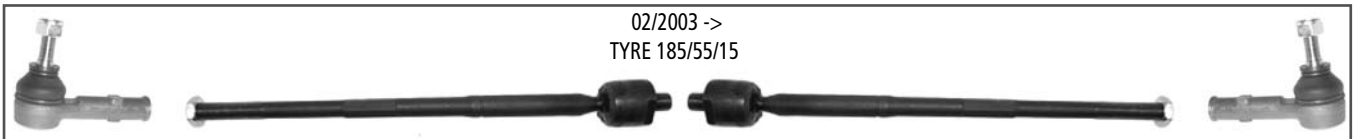

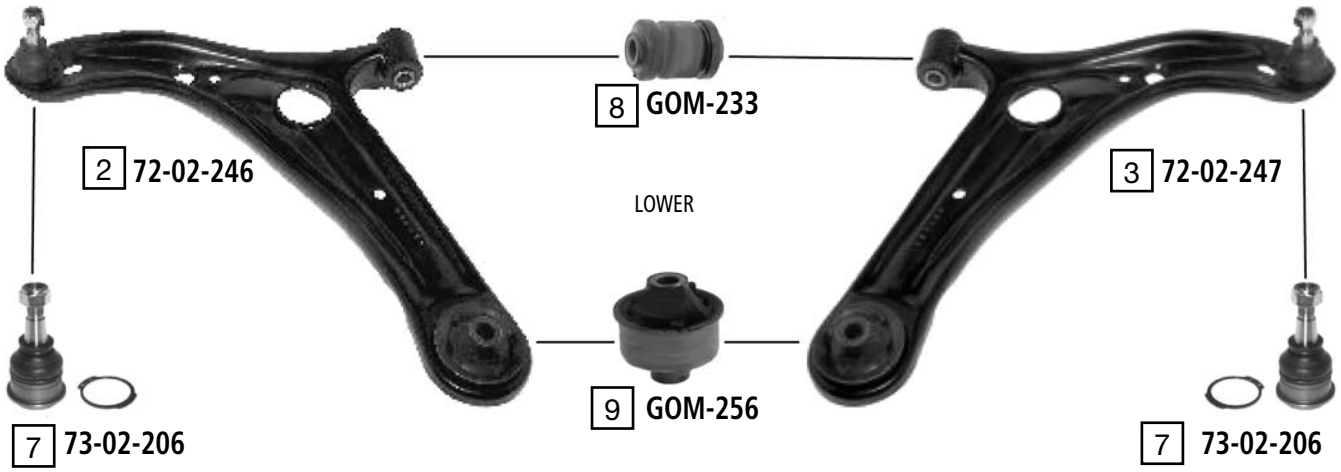

Ref	ASHIKA CODE	Description	OEM	Measures	Ref	ASHIKA CODE	Description	OEM	Measures
1	106-02-239	Stabiliser Link	48819 52010	L:97	7	73-02-206	Ball Joint Lower	Part of 72-02-246/72-02-247	c:13.5
2	72-02-246	TCA Left	48069-59035	c:13.6	8	GOM-233	Silentblock For Susp.Arm	Part of 72-02-246/72-02-247	d.32.5
3	72-02-247	TCA Right	48068-59035	c.13.6	9	GOM-256	Silentblock For Susp.Arm	Part of 72-02-246/72-02-247	d:55
4	111-02-2223	Tie Rod End Left	45047-59026	c:12.7 th.FM12X1.25	10	111-02-259	Tie Rod End	45046 19175	c.12.7 th.FM14X1.5R
5	111-02-2222	Tie Rod End Right	45046-59026	c:12.7 th.FM12X1.25R	11	103-02-245	Axial Joint	45503 59055	th.MM14X1.5R L:341
6	111-02-2224	Axial Joint	45503-59045	th.MM14X1.5R L.242	12	103-02-244	Axial Joint	45503 0D030	th:MM14X1.5R L:248

YARIS II (KSP90,NLP90,SCP90) **11/2005 ->**

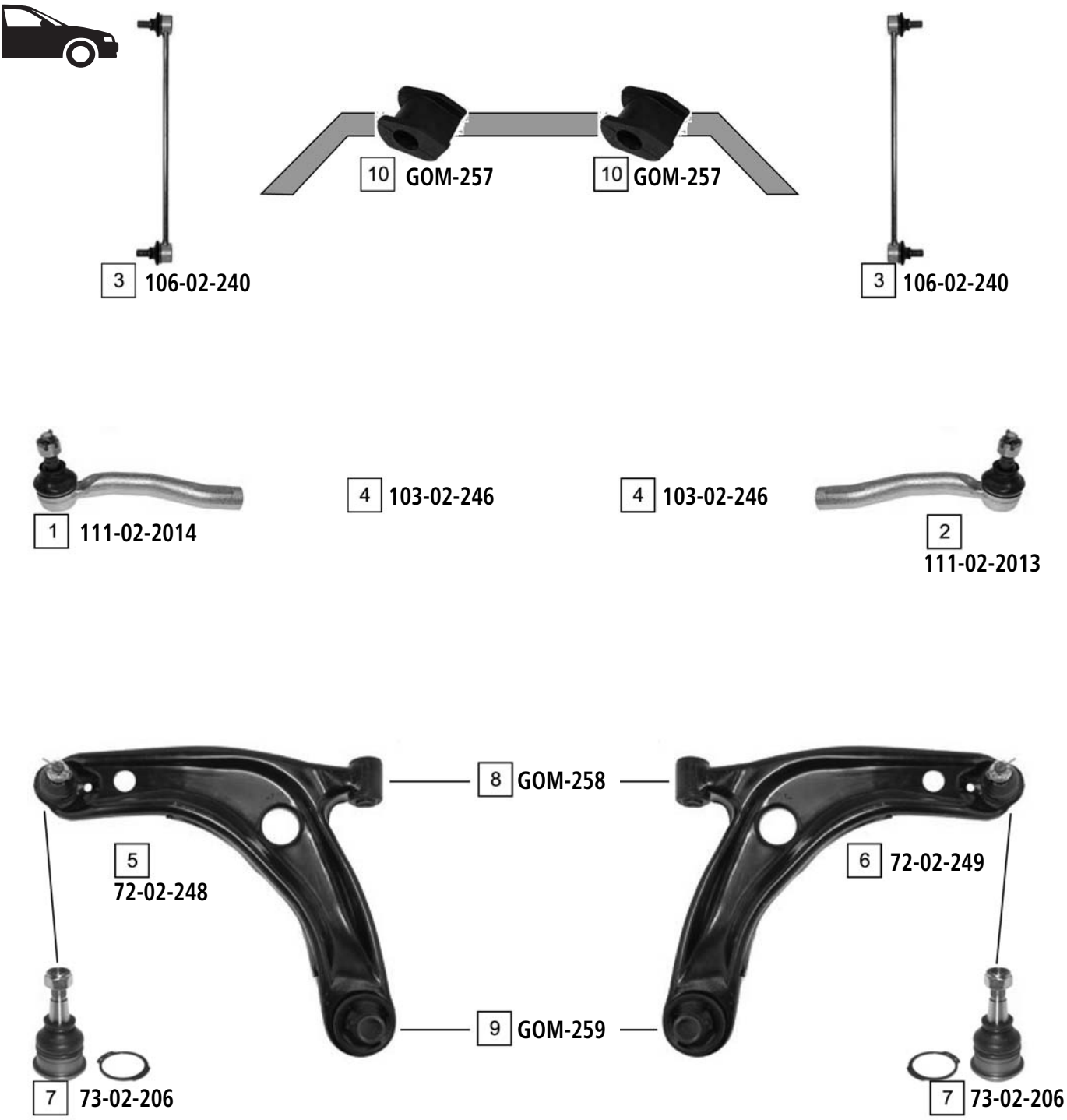

Ref	ASHIKA CODE	Description	OEM	Measures	Ref	ASHIKA CODE	Description	OEM	Measures
1	**111-02-2014**	Tie Rod End Left	45047 09220	c.12.7 th:FM14X1.5R	6	**72-02-249**	TCA Right Wbj	48068 09040	
2	**111-02-2013**	Tie Rod End Right	45046 09480	c:12.7 th:FM14X1.5R	7	**73-02-206**	Ball Joint Lower	Part of 72-02-248/72-02-249	c.13.5
3	**106-02-240**	Stabiliser Link	48820 0D010	L:360	8	**GOM-258**	Silentblock For Susp.Arm	Part of 72-02-248/72-02-249	
4	**103-02-246**	Axial Joint	Part of 45503-52070		9	**GOM-259**	Silentblock For Susp.Arm	Part of 72-02-248/72-02-249	
5	**72-02-248**	TCA Left Wbj	48069 09040		10	**GOM-257**	Stabiliser Mounting	48815 0D100	d:24

O.E.M. names and numbers are used for reference purposes only Ashika assumes no responsibility for possible errors

OE		ASHIKA CODE
0131-34-540A	MAZDA	73-03-309
0305-99-324	MAZDA	111-03-303
0305-99-324A	MAZDA	111-03-303
0305-99-356	MAZDA	53-03-303
0305-99-356A	TATA (TELCO)	53-03-303
0370-32-220	MAZDA	52-03-306
0603-99-324	MAZDA	111-03-302
0603-99-325	MAZDA	111-03-302
0662-99-322	MAZDA	111-03-334
0662-99-324	MAZDA	111-03-323
07001V006000000	SMART	72-0M-M00
07848281	DAEWOO	103-0D-D02
07848282	DAEWOO	103-0D-D03
0866-32-220A	MAZDA	52-03-306
0866-32-320	MAZDA	59-03-308
0866-99-322	MAZDA	111-03-306
0866-99-324	MAZDA	111-03-305
0866-99-324B	MAZDA	111-03-305
09305-13002	SUZUKI	GOM-812
09319-10030	SUZUKI	GOM-824
09319-12023	SUZUKI	GOM-813
09319-12044	SUZUKI	GOM-815
09319-12045	SUZUKI	GOM-816
09319-14007	SUZUKI	GOM-818
09320-10024	SUZUKI	GOM-817
0G030-32-550A	KIA	73-0K-K51
0G030-34-550A	TATA (TELCO)	73-0K-K51
0G030-34550B	KIA	73-03-317
0K011-32-230	KIA	111-0K-K67L
0K011-32-240A	KIA	111-0K-K66L
0K011-32-250A	KIA	111-0K-K66R
0K011-32-260A	KIA	27-0K-K54
0K011-32-270A	KIA	105-0K-K51L
0K011-32-280	KIA	111-0K-K67R
0K011-32-290A	KIA	105-0K-K51R
0K011-34-200	KIA	71-0K-K57
0K011-34-300D	KIA	26-0K-K56
0K011-34-510B	KIA	53-0K-K58
0K201 32240	KIA	103-0K-K08
0K201-32-280	KIA	111-0K-K65
0K201-34-300C	KIA	26-0K-K53R
0K201-34-350C	KIA	26-0K-K53L
0K201-34-550C	KIA	53-0K-K57
0K203 32240	KIA	103-0K-K09
0K2A1 3446X	KIA	GOM-K03
0K2A1 3446Y	KIA	GOM-K04
0K2A1-32-240	KIA	103-0K-K58
0K2A1-34-150A	KIA	106-0K-K54
0K2A1-34-150B	KIA	106-0K-K54
0K2A1-34-170A	KIA	106-0K-K55
0K2A1-34-550A	KIA	53-0K-K60
0K2A2 32240	KIA	103-0K-K51
0K2A5-34-150	KIA	106-0K-K55
0K2A5-34-150A	KIA	106-0K-K55
0K2A5-34-150B	KIA	106-0K-K55

OE		ASHIKA CODE
0K2A5-34-150C	KIA	106-0K-K55
0K2C0 34460	KIA	GOM-K02
0K2FA 34150	KIA	106-0K-K01
0K2FA 34170	KIA	106-0K-K02
0K2FA 34340	KIA	72-0K-K01
0K2FA 34350	KIA	72-0K-K02
0K2FK 32240	KIA	103-0K-K00
0K2KB 34156A	KIA	GOM-K01
0K2N1 34150A	KIA	106-0K-K19
0K2N1 34170A	KIA	106-0K-K20
0K2NA 34156	KIA	GOM-K30
0K2NA 34300B	KIA	72-0K-K17
0K2NA 34350B	KIA	72-0K-K18
0K30A 34480 C	KIA	GOM-K27
0K30B 34300B	KIA	71-0K-K01
0K30B 34350B	KIA	71-0K-K02
0K33C 34150A	KIA	106-0K-K15
0K33C 34160A	KIA	106-0K-K16
0K522-32-250	KIA	111-0K-K96
0K522-32-270	KIA	111-0K-K95
0K550-32-450	ASIA MOTORS	111-0A-A03L
0K550-32-510	ASIA MOTORS	111-0A-A03R
0K552-32-240	KIA	111-0K-K94
0K552-32-280	KIA	111-0K-K93
0K552-34-150B	KIA	106-0K-K58
0K552-34-151B	KIA	106-0K-K58
0K552-34-300A	KIA	26-0K-K55R
0K552-34-300B	KIA	26-0K-K55R
0K552-34-350A	KIA	26-0K-K55L
0K552-34-350B	KIA	26-0K-K55L
0K60A 32270	KIA	103-0K-K05
0K670-32-240	KIA	111-0K-K56
0K670-32-450	KIA	111-0K-K58
0K670-32-510	KIA	111-0K-K57
0K710-32-240	ASIA MOTORS	111-0A-A04
0K710-34-510	KIA	53-0K-K56
0K710-34-510	ASIA MOTORS	73-0A-A02
0K710-34-540	ASIA MOTORS	73-0A-A01
0K72A 32270	KIA	103-0K-K04
0K72A 34150A	KIA	106-0K-K14
0K72A 34510A	KIA	73-0K-K04
0K72A-32-240	KIA	111-0K-K68
0K9A2-32-240	KIA	103-0K-K58
0K9A2-34156	KIA	GOM-K18
0K9A2-34300	KIA	72-0K-K09
0K9A2-34350	KIA	72-0K-K10
0K9A2-34464	KIA	GOM-K20
0K9A2-3446X	KIA	GOM-K21
0K9A2-34470	KIA	GOM-K19
0K9A3-28-170	KIA	106-0K-K53
0K9A3-28-170A	KIA	106-0K-K53
0K9A6-34300	KIA	72-0K-K11
0K9A6-34350	KIA	72-0K-K12
0K9A6-3446X	KIA	GOM-K23
0K9A6-3446Y	KIA	GOM-K22

OE		ASHIKA CODE
0S083-34-300B	KIA	26-0K-K51L
0S083-34-350B	KIA	26-0K-K51R
0SE46-34-200	KIA	71-0K-K52L
0SE46-34-250	KIA	71-0K-K52R
1010037	MAZDA	GOM-300
1011857	MAZDA	111-03-337
1015265	MAZDA	106-03-300
1020174	MAZDA	111-03-336
1044014	MAZDA	103-03-311
1063236	MAZDA	72-03-303
1063255	MAZDA	72-03-302
11200360 0	NISSAN	111-0N-N031
11200361 0	NISSAN	111-0N-N032
11210-01B01	NISSAN	GOM-100
11210-35G00	NISSAN	GOM-102
11220-10J00	NISSAN	GOM-104
11220-35G00	NISSAN	GOM-101
11320-01G00	NISSAN	GOM-103
11320-06J00	NISSAN	GOM-105
1146150	MAZDA	106-03-312
11610-58B01	SUZUKI	GOM-807
11610-80000	SUZUKI	GOM-803
11610-80020	SUZUKI	GOM-802
11620-58B00	SUZUKI	GOM-806
11620-71C10	SUZUKI	GOM-801
11710-60A01	SUZUKI	GOM-808
11710-80010	SUZUKI	GOM-804
1175-32-220	MAZDA	52-03-306
1175-99-322	MAZDA	111-03-316
1175-99-322A	MAZDA	111-03-316
1175-99-324	MAZDA	111-03-315
1175-99-324A	MAZDA	111-03-315
1175-99-324X	MAZDA	105-03-301
1177-99-324	MAZDA	111-03-305
1177-99-324A	MAZDA	111-03-305
119051310	NISSAN	111-0N-N030
1202548	MAZDA	111-03-345
1202549	MAZDA	111-03-344
12361-54120	TOYOTA	GOM-202
12361-54121	TOYOTA	GOM-202
12361-60022	TOYOTA	GOM-200
12361-87306	DAIHATSU	GOM-601
12361-87306	DAIHATSU	GOM-602
12371-68010	TOYOTA	GOM-201
12371-87607	DAIHATSU	GOM-603
1363-99-322	MAZDA	111-03-310R
1363-99-323	MAZDA	111-03-310L
1391-99-322	MAZDA	111-03-309
1391-99-354	MAZDA	73-03-309
1391-99-354A	MAZDA	73-03-309
1524-32-320	MAZDA	59-03-306
1524-32-320D	MAZDA	59-03-306
1524-99-322	MAZDA	111-03-306
1524-99-324	MAZDA	111-03-305
1603120	DAEWOO	73-0W-D51

OE		ASHIKA CODE
1603148	DAEWOO	106-0D-D01
1757-32-220	MAZDA	52-03-306
1757-32-220A	MAZDA	52-03-306
1765V005000000	SMART	71-0M-M00
1802V004000000	SMART	106-0M-M01
1907-99-324	MAZDA	111-03-314
1907-99-324A	MAZDA	111-03-314
1E00 34 300A	MAZDA	72-03-301
1E00 34 350A	MAZDA	72-03-300
1E00-28-460C	MAZDA	GOM-322
1E00-34-156	MAZDA	GOM-321
1E01 34 153A	MAZDA	GOM-301
2001-4541	DAIHATSU	73-06-613R
20200-AA200	SUBARU	72-07-701
20200-AA210	SUBARU	72-07-700
20200-FC120	SUBARU	72-07-703
20200-FC130	SUBARU	72-07-702
20201-AA000	SUBARU	GOM-700
20201-AC100	SUBARU	GOM-701
20201-AC110	SUBARU	GOM-702
20201-FC020	SUBARU	GOM-703
20201-FC100	SUBARU	GOM-705
20201-FC110	SUBARU	GOM-704
20201-FC120	SUBARU	GOM-707
20201-FC130	SUBARU	GOM-706
20202-SA000	SUBARU	72-07-705
20202-SA010	SUBARU	72-07-704
20420-AA003	SUBARU	106-07-700
20470-SA000	SUBARU	106-07-702
20470-SA010	SUBARU	106-07-703
20481-AA001	SUBARU	106-07-701
20638-61500	NISSAN	GOM-132
21067-GA050	SUBARU	73-07-799
2113-99-324	MAZDA	111-03-303
2271V007000005	SMART	73-0M-M00
2370-99-324	MAZDA	111-03-303
2469-99-324	MAZDA	111-03-303
2541-99-324A	MAZDA	111-03-302
26001806	HYUNDAI	111-0W-D51R
26001807	HYUNDAI	111-0W-D51L
2654 TELQ 0116	TATA (TELCO)	111-00-003L
2655 TELQ 0117	TATA (TELCO)	111-00-003R
2713-4741	DAIHATSU	111-06-601L
2713-4742	DAIHATSU	111-06-601R
2713-4751	DAIHATSU	111-06-601R
2713-4752	DAIHATSU	111-06-601L
272084	CHRYSLER	GOM-C12
29610-82C00	SUZUKI	GOM-810
29650-82C00	SUZUKI	GOM-805
30666821	MAZDA	GOM-317
31310-GA120	SUBARU	103-07-735
31310-GA151	SUBARU	103-07-706
31310-GA152	SUBARU	103-07-705
31310-GA170	SUBARU	103-07-734
31320-GA101	SUBARU	111-07-703R

O.E.M. names and numbers are used for reference purposes only Ashika assumes no responsibility for possible errors

OE		ASHIKA CODE
31320-GA111	SUBARU	111-07-703L
31320-GA190	SUBARU	111-07-704R
31320-GA200	SUBARU	111-07-704L
322575	DAEWOO	103-0D-D01
324038	DAEWOO	111-0W-D51R
324039	DAEWOO	111-0W-D51L
34140-AA040	SUBARU	103-07-704
34140-FC000	SUBARU	103-07-700
34141-AA041	SUBARU	111-07-700
34160-AE000	SUBARU	103-07-703
352123	DAEWOO	71-0W-D02L
352124	DAEWOO	71-0W-D02R
352335	DAEWOO	GOM-D02
352349	DAEWOO	GOM-D01
3625-99-322	MAZDA	111-03-306
37230-35050	TOYOTA	GOM-203
37230-35080	TOYOTA	GOM-204
37230-35090	TOYOTA	GOM-261
37521-34G25	NISSAN	GOM-106
381763	TOYOTA	111-02-210
381764	TOYOTA	111-02-207
3874-99-324	MAZDA	111-03-302
3958-32-320	MAZDA	59-03-306
3958-32-320A	MAZDA	59-03-306
3958-99-324B	MAZDA	111-03-305
40100-P0110	NISSAN	73-01-111
4010A013	MITSUBISHI	72-05-516
4010A014	MITSUBISHI	72-05-517
4010A015	MITSUBISHI	73-05-509
4010A015	MITSUBISHI	73-05-506
4010A037	MITSUBISHI	72-05-524
4010A038	MITSUBISHI	72-05-525
40110-01G00	NISSAN	73-01-111
40110-01G25	NISSAN	73-01-111
40110-01G26	NISSAN	73-01-111
40110-2S485	NISSAN	73-01-107
40110-2S685	NISSAN	73-01-109
40110-73000	NISSAN	73-01-111
40110-B9500	NISSAN	73-01-111
40110-E0100	NISSAN	73-01-111
40110-F1700	NISSAN	73-01-111
40110-G0300	NISSAN	73-01-108
40110-G3700	NISSAN	73-01-123
40110-G5100	NISSAN	73-01-123
40110-P0110	NISSAN	73-01-111
40110-T3060	NISSAN	73-01-111
40110-T6000	NISSAN	73-01-111
40110-T6025	NISSAN	73-01-111
40110-V0100	NISSAN	73-01-111
4013A009	MITSUBISHI	72-05-528
4013A010	MITSUBISHI	72-05-529
4013A087	MITSUBISHI	72-05-518
4013A088	MITSUBISHI	72-05-519
4013A090	MITSUBISHI	73-05-507
40160-01A00	NISSAN	53-01-110

OE		ASHIKA CODE
40160-01A25	NISSAN	53-01-110
40160-01E00	NISSAN	73-01-124
40160-01E25	NISSAN	73-01-124
40160-01G00	NISSAN	53-01-190
40160-01G25	NISSAN	53-01-190
40160-01G26	NISSAN	53-01-190
40160-01G50	NISSAN	53-01-190
40160-01G90	NISSAN	53-01-190
40160-01N25	NISSAN	53-01-190
40160-01P00	NISSAN	73-01-137
40160-01P81	NISSAN	73-01-137
40160-0F000	NISSAN	53-01-121
40160-0M020	NISSAN	107-01-190
40160-0W025	NISSAN	73-01-119
40160-21P00	NISSAN	73-01-137
40160-26P00	NISSAN	73-01-137
40160-27N25	NISSAN	53-01-190
40160-2S485	NISSAN	73-01-110
40160-2S601	NISSAN	73-01-115
40160-2Y000	NISSAN	73-01-101
40160-41L00	NISSAN	73-01-195
40160-48W00	NISSAN	53-01-199
40160-4F100	NISSAN	111-01-183
40160-50A00	NISSAN	53-01-130
40160-50J25	NISSAN	53-01-130
40160-50W00	NISSAN	53-01-121
40160-50W01	NISSAN	53-01-121
40160-50W10	NISSAN	53-01-121
40160-50W25	NISSAN	53-01-121
40160-50Y00	NISSAN	107-01-190
40160-50Y10	NISSAN	107-01-190
40160-51E00	NISSAN	73-01-124
40160-52Y00	NISSAN	107-01-190
40160-52Y10	NISSAN	107-01-190
40160-55G90	NISSAN	53-01-190
40160-60T10	NISSAN	107-01-190
40160-60T20	NISSAN	107-01-190
40160-60Y00	NISSAN	107-01-190
40160-60Y10	NISSAN	107-01-190
40160-60Y20	NISSAN	107-01-190
40160-60Y60	NISSAN	53-01-130
40160-67L00	NISSAN	73-01-195
40160-69Y00	NISSAN	107-01-190
40160-69Y10	NISSAN	107-01-190
40160-85E00	NISSAN	73-01-124
40160-86M00	NISSAN	53-01-130
40160-92G90	NISSAN	53-01-190
40160-93G00	NISSAN	53-01-121
40160-93G25	NISSAN	53-01-121
40160-93G26	NISSAN	53-01-121
40160-9C500	NISSAN	111-0N-N016
40160-A006G0	NISSAN	53-01-110
40160-A03G0	NISSAN	53-01-110
40160-A8600	NISSAN	53-01-103
40160-A8610	NISSAN	53-01-103

OE		ASHIKA CODE
40160-A8625	NISSAN	53-01-103
40160-B9500	NISSAN	53-01-199
40160-D0125	NISSAN	73-01-113R
40160-F1700	NISSAN	53-01-199
40160-F4200	NISSAN	107-01-190
40160-G2500	NISSAN	53-01-109
40160-G2525	NISSAN	53-01-109
40160-G4010	NISSAN	53-01-109
40160-G5100	NISSAN	53-01-109
40160-G5400	NISSAN	53-01-109
40160-H1000	NISSAN	53-01-104
40160-H1001	NISSAN	53-01-104
40160-H7400	NISSAN	53-01-105
40160-H7427	NISSAN	53-01-105
40160-M3025	NISSAN	53-01-115
40160-M7025	NISSAN	53-01-118
40160-N8400	NISSAN	73-01-120
40160-P6525	NISSAN	53-01-119
40160-S0104	NISSAN	53-01-119
40160-S0105	NISSAN	53-01-119
40160-S0106	NISSAN	53-01-119
40160-S0125	NISSAN	53-01-119
40160-S0126	NISSAN	53-01-119
40160-S0127	NISSAN	53-01-119
40160-S0128	NISSAN	53-01-119
40160-T3060	NISSAN	53-01-199
40160-U7000	NISSAN	53-01-103
40160-W1000	NISSAN	53-01-126
40160-W1001	NISSAN	53-01-126
40160-W2200	NISSAN	53-01-126
40160-W2210	NISSAN	53-01-126
40160-W5000	NISSAN	53-01-106
40160-Y02G0	NISSAN	107-01-190
4016000Q0A	NISSAN	73-01-121
40161-48W00	NISSAN	53-01-198
40161-48W25	NISSAN	53-01-198
40161-48W25	NISSAN	53-01-199
40161-50W01	NISSAN	53-01-121
40161-52Y10	NISSAN	107-01-190
40161-9C500	NISSAN	111-0N-N017
40161-B9500	NISSAN	53-01-198
40161-D0125	NISSAN	73-01-113L
40161-F1700	NISSAN	53-01-198
40161-T3060	NISSAN	53-01-198
402645	DAEWOO	GOM-D03
4056-A014	MITSUBISHI	106-05-501
4056A052	MITSUBISHI	106-05-506
4056A079	MITSUBISHI	GOM-546
4084-99-324B	MAZDA	111-03-305
41331-62020	SUZUKI	GOM-811
4156A014	MITSUBISHI	106-05-524
4156A028	MITSUBISHI	GOM-547
41710-60B00	SUZUKI	GOM-800
41810-60A00	SUZUKI	GOM-809
42236-81400	DAIHATSU	GOM-603

OE		ASHIKA CODE
42412-60A00	SUZUKI	GOM-814
42420-60A00	SUZUKI	111-0N-N051
42420-62J00	SUZUKI	106-08-804
42420-65J00	SUZUKI	106-08-803
42420-80J00	SUZUKI	106-08-805
42431-70B42	SUZUKI	GOM-820
42431-79J00	SUZUKI	GOM-830
42451 M76G00	SUZUKI	GOM-821
43068-87401	DAIHATSU	72-06-603
43069-87401	DAIHATSU	72-06-602
43308-12020	DAIHATSU	53-06-605
43308-12020	TOYOTA	53-02-205
43308-12030	TOYOTA	53-06-609
43308-16010	TOYOTA	53-02-299
43308-19035	TOYOTA	53-02-209
43308-29015	TOYOTA	73-02-211
43308-29115	TOYOTA	73-02-212
43310-39016	TOYOTA	73-02-215
43330-02020	TOYOTA	53-02-297
43330-06020	TOYOTA	73-02-239
43330-09030	TOYOTA	53-02-297
43330-09210	TOYOTA	73-02-200
43330-09360	TOYOTA	73-02-213
43330-19025	TOYOTA	73-02-224
43330-19045	TOYOTA	73-02-219
43330-19065	TOYOTA	73-02-232R
43330-19066	TOYOTA	73-02-232R
43330-19075	TOYOTA	53-02-298
43330-19085	TOYOTA	73-02-238R
43330-19095	TOYOTA	53-02-297
43330-19115	TOYOTA	73-02-210
43330-29045	TOYOTA	53-02-297
43330-29046	TOYOTA	53-02-297
43330-29055	TOYOTA	53-02-297
43330-29056	TOYOTA	53-02-297
43330-29065	TOYOTA	53-02-297
43330-29115	DAIHATSU	73-06-625
43330-29115	TOYOTA	73-06-625
43330-29125	TOYOTA	53-02-221
43330-29135	TOYOTA	53-02-296
43330-29136	TOYOTA	53-02-296
43330-29137	TOYOTA	53-02-296
43330-29138	TOYOTA	53-02-296
43330-29139	TOYOTA	53-02-296
43330-29145	TOYOTA	73-02-299
43330-29146	TOYOTA	73-02-299
43330-29155	TOYOTA	73-02-237
43330-29155	TOYOTA	53-02-221
43330-29175	TOYOTA	73-06-625
43330-29185	TOYOTA	73-02-297
43330-29205	TOYOTA	53-02-296
43330-29225	TOYOTA	73-02-241
43330-29235	TOYOTA	73-02-236
43330-29265	TOYOTA	53-02-297
43330-29275	TOYOTA	73-02-244R

O.E.M. names and numbers are used for reference purposes only Ashika assumes no responsibility for possible errors

OE		ASHIKA CODE
43330-29315	TOYOTA	53-02-297
43330-29325	TOYOTA	73-02-241
43330-29326	TOYOTA	73-02-241
43330-29375	TOYOTA	53-02-297
43330-29405	TOYOTA	73-02-209
43330-39045	TOYOTA	53-02-206
43330-39065	TOYOTA	53-02-210
43330-39075	TOYOTA	53-02-206
43330-39095	TOYOTA	53-02-210
43330-39105	TOYOTA	53-02-210
43330-39115	TOYOTA	53-02-210
43330-39135	TOYOTA	73-02-216
43330-39145	TOYOTA	53-02-215
43330-39165	TOYOTA	53-02-215
43330-39175	TOYOTA	53-02-228
43330-39195	TOYOTA	53-02-228
43330-39225	TOYOTA	53-02-210
43330-39235	TOYOTA	53-02-210
43330-39235	TOYOTA	53-02-228
43330-39245	TOYOTA	53-02-235
43330-39255	TOYOTA	53-02-228
43330-39265	TOYOTA	53-02-295
43330-39285	TOYOTA	73-02-239
43330-39295	TOYOTA	53-02-235
43330-39315	TOYOTA	53-02-295
43330-39415	TOYOTA	73-02-217
43330-49025	TOYOTA	73-02-241
43330-49095	TOYOTA	73-02-242
43330-87501	DAIHATSU	73-06-613R
43330-87580	DAIHATSU	73-06-613R
43330-87581	DAIHATSU	73-06-611
43330-87582	DAIHATSU	73-06-613R
43340-19015	TOYOTA	73-02-290
43340-19025	TOYOTA	73-02-238L
43340-29025	TOYOTA	53-02-297
43340-29026	TOYOTA	53-02-297
43340-29036	TOYOTA	53-02-297
43340-29045	TOYOTA	53-02-297
43340-29075	DAIHATSU	53-06-699
43340-29075	TOYOTA	53-02-297
43340-29085	TOYOTA	73-02-244L
43340-29095	TOYOTA	73-06-625
43340-29095	DAIHATSU	73-06-625
43340-29105	TOYOTA	53-02-221
43340-29175	TOYOTA	73-02-208
43340-39035	TOYOTA	53-02-210
43340-39045	TOYOTA	53-02-210
43340-39075	TOYOTA	53-02-206
43340-39085	TOYOTA	53-02-210
43340-39095	TOYOTA	53-02-210
43340-39125	TOYOTA	53-02-210
43340-39135	TOYOTA	53-02-210
43340-39145	TOYOTA	53-02-215
43340-39205	TOYOTA	53-02-210
43340-39225	TOYOTA	53-02-235

OE		ASHIKA CODE
43340-39245	TOYOTA	53-02-295
43340-39325	TOYOTA	73-02-228
43340-87581	DAIHATSU	73-06-611
43350-29015	TOYOTA	73-02-207
43350-29035	DAIHATSU	73-06-629
43350-29035	TOYOTA	73-02-229
43350-29036	DAIHATSU	73-06-629
43350-29036	DAIHATSU	73-06-625
43350-29036	TOYOTA	73-02-229
43350-29065	TOYOTA	73-02-234
43350-29076	TOYOTA	73-02-229
43350-39016	TOYOTA	73-02-203
43350-39035	TOYOTA	73-02-214
43350-39045	TOYOTA	73-02-227
43350-39085	TOYOTA	73-02-227
43350-39115	TOYOTA	73-02-214
43360-29015	TOYOTA	73-02-207
43360-29035	TOYOTA	73-02-207
43360-29045	TOYOTA	73-02-207
43360-29055	DAIHATSU	73-06-629
43360-29055	TOYOTA	73-02-229
43360-29056	TOYOTA	73-02-229
43360-29056	DAIHATSU	73-06-629
43360-29076	TOYOTA	73-02-220
43360-39065	TOYOTA	73-02-203
43360-39075	TOYOTA	73-02-227
43360-39085	TOYOTA	73-02-227
4342539	MAZDA	103-03-327
4410A173	MITSUBISHI	103-05-515
4422A009	MITSUBISHI	111-05-520
4422A010	MITSUBISHI	111-05-519
4422A012	MITSUBISHI	103-05-519
4422A018	MITSUBISHI	111-05-527
4440108000	SSANGYONG	72-0S-S02
4440208000	SSANGYONG	72-0S-S01
44430-03000	SSANGYONG	73-0S-S02
44430-03011	SSANGYONG	73-0S-S01
4450108005	SSANGYONG	72-0S-S04
4450208005	SSANGYONG	72-0S-S03
44505-05001	SSANGYONG	73-0S-S02
44560-03000	SSANGYONG	73-0S-S05
44560-03010	SSANGYONG	73-0S-S05
44560-03011	SSANGYONG	73-0S-S05
44570-03012	SSANGYONG	73-0S-S05
44570-05000	SSANGYONG	106-0S-S04
4475005001	DAEWOO	106-0S-S01
4475008001	SSANGYONG	106-0S-S02
4475508000	SSANGYONG	106-0S-S03
4500254	NISSAN	73-01-103
45044 69086	TOYOTA	111-02-254
45044-60H00	TOYOTA	111-02-245
45044-60H03	TOYOTA	111-02-254
45044-69035	TOYOTA	111-02-245
45044-69045	TOYOTA	111-02-249
45044-69055	TOYOTA	111-02-245

OE		ASHIKA CODE
45044-69065	TOYOTA	111-02-249
45044-69075	TOYOTA	111-02-253
45044-69085	TOYOTA	111-02-254
45044-69095	TOYOTA	111-02-236
45044-69105	TOYOTA	111-02-255
45044-69106	TOYOTA	111-02-279
45044-69115	TOYOTA	111-02-278
45044-69125	TOYOTA	111-02-279
45045-29035	TOYOTA	111-02-213L
45045-29045	TOYOTA	111-02-295
45045-60013	TOYOTA	111-02-217L
45045-69015	TOYOTA	111-02-217L
45045-69035	TOYOTA	111-02-246
45045-69045	TOYOTA	111-02-246
45045-69065	TOYOTA	111-02-251
45046-09230	TOYOTA	111-02-201
45046-09430	TOYOTA	111-02-277
45046-09480	TOYOTA	111-02-2013
45046-19015	TOYOTA	111-02-223
45046-19055	TOYOTA	111-02-206
45046-19065	DAIHATSU	111-02-205
45046-19075	TOYOTA	111-02-223
45046-19085	TOYOTA	111-02-223
45046-19095	TOYOTA	111-02-223
45046-19095	DAIHATSU	111-02-205
45046-19105	TOYOTA	108-02-222
45046-19115	TOYOTA	108-02-234
45046-19135	DAIHATSU	111-02-205
45046-19135	TOYOTA	111-02-223
45046-19165	TOYOTA	111-02-266
45046-19175	TOYOTA	111-02-259
45046-19205	TOYOTA	111-02-298
45046-19206	TOYOTA	111-02-298
45046-19216	TOYOTA	111-02-298
45046-19265	TOYOTA	111-02-271
45046-20010	TOYOTA	111-02-205
45046-29045	TOYOTA	111-02-205
45046-29055	TOYOTA	111-02-205
45046-29056	TOYOTA	111-02-205
45046-29075	TOYOTA	111-02-223
45046-29075	DAIHATSU	111-02-205
45046-29095	TOYOTA	111-02-205
45046-29095	DAIHATSU	111-06-605
45046-29095	DAIHATSU	111-06-604
45046-29105	TOYOTA	111-02-213L
45046-29115	TOYOTA	111-02-226
45046-29125	TOYOTA	111-02-226
45046-29135	TOYOTA	73-02-291
45046-29165	TOYOTA	111-02-265
45046-29205	TOYOTA	111-02-267
45046-29215	TOYOTA	111-02-270
45046-29235	TOYOTA	111-02-2003
45046-29255	TOYOTA	111-02-283
45046-29275	TOYOTA	111-02-297
45046-29285	TOYOTA	111-02-287

OE		ASHIKA CODE
45046-29305	TOYOTA	111-02-259
45046-29325	TOYOTA	111-02-281
45046-29335	TOYOTA	111-02-297
45046-29365	TOYOTA	111-02-2225
45046-29425	TOYOTA	111-02-200
45046-35080	TOYOTA	111-02-257
45046-39085	TOYOTA	111-02-215R
45046-39095	TOYOTA	111-02-203R
45046-39105	TOYOTA	111-02-226
45046-39106	TOYOTA	111-02-226
45046-39125	TOYOTA	111-02-226
45046-39155	TOYOTA	111-02-239
45046-39175	TOYOTA	111-02-226
45046-39185	TOYOTA	111-02-263R
45046-39215	TOYOTA	111-02-226
45046-39235	TOYOTA	111-02-226
45046-39255	TOYOTA	111-02-272
45046-39256	TOYOTA	111-02-272
45046-39335	TOYOTA	111-02-289
45046-39505	TOYOTA	111-02-2002
45046-49085	TOYOTA	111-02-237
45046-49095	TOYOTA	111-02-2007
45046-49115	TOYOTA	111-02-275
45046-49125	TOYOTA	111-02-234
45046-49195	TOYOTA	111-02-2009
45046-59025	TOYOTA	111-02-2222
45046-59026	TOYOTA	111-02-2222
45046-60011	TOYOTA	111-02-221L
45046-60013	TOYOTA	111-02-221L
45046-60021	TOYOTA	111-02-221R
45046-60023	TOYOTA	111-02-221R
45046-60030	TOYOTA	111-02-217R
45046-60031	TOYOTA	111-02-217R
45046-60032	TOYOTA	111-02-217R
45046-60033	TOYOTA	111-02-217R
45046-60071	TOYOTA	111-02-221L
45046-60081	TOYOTA	111-02-221R
45046-69025	TOYOTA	111-02-217R
45046-69030	TOYOTA	111-02-217R
45046-69035	TOYOTA	111-02-209
45046-69045	TOYOTA	111-02-221L
45046-69055	TOYOTA	111-02-221R
45046-69105	TOYOTA	111-02-250
45046-69115	TOYOTA	111-02-247
45046-69125	TOYOTA	111-02-256
45046-69135	TOYOTA	111-02-256
45046-69195	TOYOTA	111-02-291
45046-69205	TOYOTA	111-02-2001
45046-87203	DAIHATSU	111-06-699
45046-87280	DAIHATSU	111-06-604
45046-87281	DAIHATSU	111-06-604
45046-87282	DAIHATSU	111-06-609R
45046-87283	DAIHATSU	111-06-609R
45046-87302	DAIHATSU	111-06-603R
45046-87303	DAIHATSU	111-06-602R

O.E.M. names and numbers are used for reference purposes only Ashika assumes no responsibility for possible errors

OE		ASHIKA CODE
45046-87401	DAIHATSU	111-06-610
45046-87501	DAIHATSU	111-06-601L
45046-87502	DAIHATSU	111-06-601L
45046-87503	DAIHATSU	111-06-607R
45046-87504	DAIHATSU	111-06-607R
45046-87580	DAIHATSU	111-06-607R
45046-87601	DAIHATSU	111-06-602R
45046-87680	DAIHATSU	111-06-602R
45046-87701	DAIHATSU	111-06-604
45046-87707	DAIHATSU	111-06-613
45046-87780	DAIHATSU	111-06-609R
45046-87781	DAIHATSU	111-06-606R
45046-8Y001	TOYOTA	111-02-280
45046-97203	DAIHATSU	111-06-611
45046-97204-000	DAIHATSU	111-06-617
45047-09220	TOYOTA	111-02-2014
45047-19035	TOYOTA	111-02-223
45047-19055	TOYOTA	111-02-205
45047-19055	DAIHATSU	111-06-604
45047-19056	TOYOTA	108-02-234
45047-19115	TOYOTA	111-02-264
45047-20010	TOYOTA	111-02-205
45047-29015	TOYOTA	111-02-205
45047-29045	TOYOTA	111-02-295
45047-29065	TOYOTA	111-02-2004
45047-29075	TOYOTA	111-02-293
45047-29105	TOYOTA	111-02-294
45047-29125	TOYOTA	111-02-2226
45047-35050	TOYOTA	111-02-258
45047-39075	TOYOTA	111-02-228
45047-39076	TOYOTA	111-02-228
45047-39085	TOYOTA	111-02-232
45047-39115	TOYOTA	111-02-263L
45047-39155	TOYOTA	111-02-273
45047-39156	TOYOTA	111-02-273
45047-39215	TOYOTA	111-02-282
45047-49015	TOYOTA	111-02-252
45047-49025	TOYOTA	111-02-2008
45047-49045	TOYOTA	111-02-276
45047-49055	TOYOTA	111-02-235
45047-49135	TOYOTA	111-02-2010
45047-59025	TOYOTA	111-02-2223
45047-59026	TOYOTA	111-02-2223
45047-69035	TOYOTA	111-02-248
45047-69065	TOYOTA	111-02-248
45047-69066	TOYOTA	111-02-285
45047-69085	TOYOTA	111-02-285
45047-69100	TOYOTA	111-02-290
45047-69115	TOYOTA	111-02-2000
45047-87280	DAIHATSU	111-06-609L
45047-87281	DAIHATSU	111-06-609L
45047-87303	TOYOTA	111-02-202L
45047-87303	DAIHATSU	111-06-602L
45047-87380	DAIHATSU	111-06-602L
45047-87380	TOYOTA	111-02-202L

OE		ASHIKA CODE
45047-87501	DAIHATSU	111-06-601R
45047-87502	DAIHATSU	111-06-601R
45047-87503	DAIHATSU	111-06-607L
45047-87580	DAIHATSU	111-06-607L
45047-87583	DAIHATSU	111-06-607L
45047-87584	DAIHATSU	111-06-607L
45047-87680	DAIHATSU	111-06-615
45047-87685	DAIHATSU	111-06-608
45047-87706	DAIHATSU	111-06-614
45047-87780	DAIHATSU	111-06-609L
45047-87781	DAIHATSU	111-06-606L
45047-87782	DAIHATSU	111-06-606L
45047-87784	DAIHATSU	111-06-606L
45047-97203	DAIHATSU	111-06-612
45047-97204-000	DAIHATSU	111-06-616
45056-87501	DAIHATSU	111-06-601R
45056-87502	DAIHATSU	111-06-601R
45057-87501	DAIHATSU	111-06-601L
45057-87502	DAIHATSU	111-06-601L
45200-50E00	SUZUKI	71-08-803
45200-60810	SUZUKI	72-08-809
45200-60820	SUZUKI	72-08-808
45200-69DV1	SUZUKI	71-08-803
45200-75F00	SUZUKI	71-08-810
45200-76G00	SUZUKI	71-08-811
45200-76G20	SUZUKI	71-08-801
45200-78002	SUZUKI	71-08-803
45200-79000	SUZUKI	71-08-802
45200-79001	SUZUKI	71-08-802
45200-82000	SUZUKI	73-08-804
45200-84000	SUZUKI	71-08-803
45200-85001	SUZUKI	71-08-805
45200-85002	SUZUKI	71-08-805
45200-85E00	SUZUKI	71-08-804
45200-A70B00	DAEWOO	71-08-803
45200-M79F00	SUZUKI	71-08-800
45201-56B00	SUZUKI	111-0N-N046
45201-62J00	SUZUKI	72-08-811
45201-63G01	SUZUKI	72-08-801
45201-65D00	SUZUKI	72-08-803
45201-65D01	SUZUKI	72-08-805
45201-65J00	SUZUKI	72-08-807
45201-77A01	SUZUKI	71-08-807
45201-79J00	SUZUKI	72-08-813
45202-56B00	SUZUKI	111-0N-N047
45202-62J00	SUZUKI	72-08-810
45202-63G01	SUZUKI	72-08-800
45202-65D00	SUZUKI	72-08-802
45202-65D01	SUZUKI	72-08-804
45202-65J00	SUZUKI	72-08-806
45202-77A01	SUZUKI	71-08-806
45202-79J00	SUZUKI	72-08-814
45261 77A10	SUZUKI	GOM-C07
45261-4F702	NISSAN	106-01-198
45261-65J00	SUZUKI	GOM-825

OE		ASHIKA CODE
45261-79J00	SUZUKI	GOM-831
45261-90J01	NISSAN	106-01-199
45401-05000	SSANGYONG	101-0S-SO4
45401-19045	TOYOTA	52-02-203
45401-19055	TOYOTA	52-02-212
45401-19066	TOYOTA	52-02-202
45401-19095	TOYOTA	52-02-210
45401-19105	TOYOTA	52-02-220
45401-19115	TOYOTA	52-02-220
45401-19125	TOYOTA	52-02-202
45401-19135	TOYOTA	52-02-202
45401-19175	TOYOTA	52-02-215
45401-19185	TOYOTA	52-02-216
45401-19195	TOYOTA	52-02-216
45401-29095	TOYOTA	52-02-213
45401-29175	TOYOTA	52-02-224
45401-35180	TOYOTA	52-02-234
45401-35190	TOYOTA	52-02-235
45401-35220	TOYOTA	52-02-235
45401-35230	TOYOTA	52-02-234
45401-35240	TOYOTA	52-02-236
45406-19016	DAIHATSU	111-06-624
45406-19016	TOYOTA	111-02-224
45406-19045	TOYOTA	111-02-224
45406-19055	DAIHATSU	111-06-624
45406-19055	TOYOTA	111-02-224
45406-19065	TOYOTA	111-02-224
45406-19065	DAIHATSU	111-06-624
45406-19075	TOYOTA	111-02-224
45406-19075	DAIHATSU	111-06-624
45406-29055	TOYOTA	111-02-219R
45406-29056	TOYOTA	111-02-219R
45406-29065	TOYOTA	111-02-219R
45406-29075	TOYOTA	111-02-244
45406-29095	TOYOTA	111-02-214
45406-29105	TOYOTA	111-02-233
45406-29115	TOYOTA	111-02-227
45406-29135	TOYOTA	111-02-260
45406-29145	TOYOTA	111-02-232
45406-39075	TOYOTA	111-02-220
45406-39085	TOYOTA	111-02-227
45406-39086	TOYOTA	111-02-227
45406-39095	TOYOTA	111-02-227
45406-39105	TOYOTA	111-02-240
45406-39115	TOYOTA	111-02-227
45406-39125	TOYOTA	111-02-227
45406-39165	TOYOTA	73-02-292
45406-39175	TOYOTA	73-02-292
45407-29015	TOYOTA	111-02-219L
45407-29016	TOYOTA	111-02-219L
4543200010	SMART	106-0M-M02
4543300707	SMART	72-05-508
4543300807	SMART	72-05-509
45440-29045	TOYOTA	28-02-297
45440-29125	TOYOTA	28-02-297

OE		ASHIKA CODE
4544600205	SMART	111-05-500
45450-29085	TOYOTA	28-02-297
45450-29155	TOYOTA	27-02-212
45450-39015	TOYOTA	27-02-201
45450-39016	TOYOTA	27-02-201
45450-39037	TOYOTA	28-02-297
45450-39055	TOYOTA	27-02-201
45450-39065	TOYOTA	27-02-201
45450-39125	TOYOTA	27-02-298
45450-39155	TOYOTA	27-02-209
45450-39165	TOYOTA	27-02-210
45460-19025	TOYOTA	105-02-299
45460-19055	TOYOTA	105-02-204
45460-19056	TOYOTA	105-02-299
45460-19065	TOYOTA	105-02-204
45460-19085	TOYOTA	105-02-204
45460-19095	TOYOTA	105-02-204
45460-19105	TOYOTA	108-02-222
45460-19115	TOYOTA	108-02-234
45460-19125	DAIHATSU	108-06-622
45460-19135	TOYOTA	105-02-204
45460-19145	TOYOTA	108-02-237
45460-19155	TOYOTA	110-02-231
45460-19165	TOYOTA	110-02-235
45460-19175	TOYOTA	105-02-299
45460-19185	TOYOTA	111-02-261R
45460-19195	TOYOTA	111-02-262R
45460-19205	TOYOTA	111-02-262R
45460-19235	TOYOTA	111-02-2012
45460-29066	TOYOTA	105-02-208
45460-29085	TOYOTA	105-02-201
45460-29125	TOYOTA	105-02-208
45460-29135	TOYOTA	105-02-299
45460-29145	TOYOTA	105-02-299
45460-29185	TOYOTA	105-02-208
45460-29205	TOYOTA	110-02-230
45460-29215	TOYOTA	108-02-203
45460-29225	TOYOTA	110-02-230
45460-29265	TOYOTA	105-02-209
45460-29285	TOYOTA	105-02-220
45460-29315	TOYOTA	110-02-271
45460-29425	TOYOTA	111-02-2005
45460-39095	TOYOTA	108-02-203
45460-39096	TOYOTA	108-02-203
45460-39125	TOYOTA	105-02-206
45460-39155	TOYOTA	108-02-203
45460-39165	TOYOTA	110-02-282
45460-39195	TOYOTA	105-02-211
45460-39215	TOYOTA	108-02-203
45460-39225	TOYOTA	108-02-203
45460-39245	TOYOTA	105-02-224
45460-39615	TOYOTA	111-02-231
45460-87401	DAIHATSU	103-06-612
45470-19015	TOYOTA	108-02-234
45470-19035	TOYOTA	111-02-261L

O.E.M. names and numbers are used for reference purposes only Ashika assumes no responsibility for possible errors

OE		ASHIKA CODE
45470-19045	TOYOTA	111-02-262L
45470-19055	TOYOTA	111-02-262L
45470-29046	TOYOTA	105-02-214
45470-29075	TOYOTA	105-02-220
45470-29085	TOYOTA	110-02-271
45470-29185	TOYOTA	111-02-2006
45470-39055	TOYOTA	105-02-224
45470-39215	TOYOTA	111-02-230
45490-19125	TOYOTA	108-02-222
45490-19125	TOYOTA	59-02-201
45490-19165	TOYOTA	59-02-209
45490-19175	TOYOTA	59-02-209
45490-19215	TOYOTA	59-02-226
45490-19225	TOYOTA	59-02-229
45490-19245	TOYOTA	59-02-229
45490-29135	TOYOTA	59-02-218
45490-29145	TOYOTA	59-02-218
45490-29245	TOYOTA	59-02-235
45490-29295	TOYOTA	59-02-209
45490-29305	TOYOTA	59-02-209
45490-29335	TOYOTA	59-02-209
45490-29355	TOYOTA	59-02-209
45490-29365	TOYOTA	59-02-209
45490-29405	TOYOTA	59-02-209
45490-29425	TOYOTA	59-02-209
45490-29465	TOYOTA	59-02-236
45490-29475	TOYOTA	59-02-243
45490-29515	TOYOTA	59-02-246
45490-35130	TOYOTA	59-02-239
45490-35140	TOYOTA	59-02-215
45490-39245	TOYOTA	59-02-245
45490-39255	TOYOTA	59-02-244
45490-39315	TOYOTA	59-02-240
45490-39325	TOYOTA	59-02-245
45490-39335	TOYOTA	59-02-244
45490-39345	TOYOTA	59-02-244
45490-39355	TOYOTA	59-02-245
45490-405	TOYOTA	59-02-209
45500-50800	SUZUKI	GOM-822
45501-05000	SSANGYONG	101-0S-SO6
45501-05100	SSANGYONG	101-0S-SO6
45501-05302	SSANGYONG	101-0S-SO6
45502-05004	SSANGYONG	101-0S-SO5
45502-05102	SSANGYONG	101-0S-SO7
45503-05010	TOYOTA	76-02-296
45503-05020	TOYOTA	111-02-2227
45503-06080	TOYOTA	103-02-231
45503-0D030	TOYOTA	103-02-244
45503-0F010	TOYOTA	103-02-200
45503-10020	DAIHATSU	103-02-201
45503-10020	TOYOTA	103-02-201
45503-12130	TOYOTA	103-02-225
45503-19015	DAIHATSU	103-02-201
45503-19015	TOYOTA	103-02-201
45503-19025	TOYOTA	103-02-204

OE		ASHIKA CODE
45503-19035	TOYOTA	103-02-202
45503-19036	TOYOTA	103-02-206
45503-19045	TOYOTA	103-02-201
45503-19055	TOYOTA	103-02-205
45503-19056	TOYOTA	103-02-210
45503-19075	TOYOTA	103-02-211
45503-19085	TOYOTA	103-02-289
45503-19116	TOYOTA	103-02-212
45503-19125	TOYOTA	103-02-213
45503-19135	TOYOTA	103-02-214
45503-19145	TOYOTA	103-02-238
45503-19155	TOYOTA	103-02-298
45503-19195	TOYOTA	103-02-298
45503-19205	TOYOTA	76-02-299
45503-19215	TOYOTA	103-02-290
45503-19255	TOYOTA	103-02-226
45503-22010	TOYOTA	103-02-203
45503-29015	TOYOTA	103-02-203
45503-29016	TOYOTA	103-02-203
45503-29016	DAIHATSU	103-06-603
45503-29025	TOYOTA	103-02-207
45503-29035	TOYOTA	103-02-219
45503-29075	TOYOTA	103-02-215
45503-29095	TOYOTA	103-02-297
45503-29105	TOYOTA	103-02-216
45503-29125	DAIHATSU	103-06-603
45503-29125	TOYOTA	103-02-203
45503-29135	TOYOTA	103-02-297
45503-29155	TOYOTA	103-02-295
45503-29165	TOYOTA	103-02-294
45503-29215	TOYOTA	103-02-293
45503-29245	TOYOTA	103-02-292
45503-29255	TOYOTA	103-02-217
45503-29265	TOYOTA	103-02-218
45503-29295	TOYOTA	103-02-239
45503-29355	TOYOTA	103-02-291
45503-29365	TOYOTA	103-02-290
45503-29385	TOYOTA	76-02-299
45503-29435	TOYOTA	76-02-298
45503-29475	TOYOTA	76-02-297
45503-29565	TOYOTA	103-02-227
45503-29615	TOYOTA	76-02-298
45503-39015	TOYOTA	103-02-289
45503-39025	TOYOTA	103-02-216
45503-39075	TOYOTA	103-02-228
45503-39135	TOYOTA	103-02-291
45503-39225	TOYOTA	103-02-222
45503-39235	TOYOTA	103-02-237
45503-49035	TOYOTA	103-02-223
45503-49055	TOYOTA	103-02-242
45503-49105	TOYOTA	103-02-209
45503-52010	TOYOTA	111-02-2224
45503-52070	TOYOTA	103-02-246
45503-59045	TOYOTA	111-02-2224
45503-59055	TOYOTA	103-02-245

OE		ASHIKA CODE
45503-69015	TOYOTA	103-02-230
45503-69025	TOYOTA	103-02-234
45503-87102	DAIHATSU	103-06-600
45503-87215	DAIHATSU	103-06-611
45503-87701	DAIHATSU	103-02-201
45503-87702	DAIHATSU	103-06-602
45503-87703	DAIHATSU	103-06-603
45503-87705	DAIHATSU	103-06-604
45503-87706	DAIHATSU	103-06-606
45503-87708	DAIHATSU	103-06-605
45503-87710	DAIHATSU	103-06-609
45503-87711	DAIHATSU	103-06-605
45503-87714	DAIHATSU	103-06-610
45503-97203	DAIHATSU	103-06-607
45503-97204	DAIHATSU	103-06-608
45503-990DL	TOYOTA	103-02-224
45504-28030	TOYOTA	103-02-240
45527-JD1A	NISSAN	111-01-1003
45530-62J00	SUZUKI	GOM-828
45530-70C00	SUZUKI	GOM-827
45601-05000	SSANGYONG	101-0S-SO9
45601-05001	TATA (TELCO)	101-0S-SO9
45700-60A00	SUZUKI	111-08-890
45700-67001	SUZUKI	73-08-801
46045-69055	TOYOTA	111-02-251
46300-60B00	SUZUKI	71-08-808
46300-60B10	SUZUKI	71-08-809
46420-60B02	SUZUKI	GOM-823
46449-01051	SSANGYONG	52-0S-S01
4656010	CHRYSLER	73-0C-C05
4656012AC	CHRYSLER	GOM-C11
4656730AH	CHRYSLER	72-0C-C09
4656731AH	CHRYSLER	72-0C-C10
46620-01000	SSANGYONG	111-0S-S31
46620-02010	SSANGYONG	24-0S-S01
46630-60B01	SUZUKI	106-08-800
46630-60B10	SUZUKI	73-08-802
46630-80F00	SUZUKI	106-08-801
46640-80F00	SUZUKI	106-08-802
46660-01000	SSANGYONG	111-0S-S02L
46660-01010	SSANGYONG	111-0S-S02L
46660-05500	SSANGYONG	111-0S-S01
46660-05501	SSANGYONG	111-0S-S01
4666008001	SSANGYONG	111-0S-S04
4666008011	SSANGYONG	111-0S-S05
46670-01000	SSANGYONG	111-0S-S03R
46670-01010	SSANGYONG	111-0S-S03R
4694747	CHRYSLER	73-0C-C06
4694760-C	CHRYSLER	72-0C-C13
4694761-C	CHRYSLER	72-0C-C14
4728884	CHRYSLER	72-0C-C11
4728885	CHRYSLER	72-0C-C12
4743095-AA	CHRYSLER	GOM-C17
4743669AA	CHRYSLER	106-0C-C11
4762861-AA	CHRYSLER	111-0C-C09

OE		ASHIKA CODE
4766542-AA	CHRYSLER	72-0C-C15
4766543-AA	CHRYSLER	72-0C-C16
4797706	CHRYSLER	111-0C-C11
48061-05010	TOYOTA	GOM-227
48061-26050	TOYOTA	GOM-263
4806304	CHEVROLET	106-0C-C01
4806305	CHEVROLET	106-0C-C02
48066-29075	TOYOTA	72-02-225
48067-29075	TOYOTA	72-02-224
48068-05050	TOYOTA	72-02-200
48068-05070	TOYOTA	72-02-203
48068-09040	TOYOTA	72-02-249
48068-0F010	TOYOTA	72-02-223
48068-0H010	TOYOTA	72-02-207
48068-12130	TOYOTA	72-02-217
48068-12171	TOYOTA	72-02-219
48068-12260	TOYOTA	72-02-221
48068-19045	TOYOTA	28-02-297
48068-19095	TOYOTA	73-02-222
48068-20221	TOYOTA	72-02-213
48068-20260	TOYOTA	72-02-211
48068-20380	TOYOTA	72-02-215
48068-26130	TOYOTA	71-02-201
48068-28120	TOYOTA	72-02-239
48068-33031	TOYOTA	72-02-209
48068-35080	TOYOTA	72-02-227
48068-42010	TOYOTA	72-02-241
48068-42040	TOYOTA	72-02-243
48068-42050	TOYOTA	72-02-245
48068-44010	TOYOTA	72-02-237
48068-49065	TOYOTA	72-02-205
48068-59035	TOYOTA	72-02-247
48068-60010	TOYOTA	72-02-235
48068-87206	DAIHATSU	73-06-600
48068-87209	DAIHATSU	71-06-609
48068-87501-000	DAIHATSU	71-06-608
48068-87705	DAIHATSU	71-06-605R
48068-87706	DAIHATSU	71-06-699
48068-87711	DAIHATSU	72-06-601
48068-97202	DAIHATSU	71-06-603
48068-97203	DAIHATSU	71-06-605
48069-05050	TOYOTA	72-02-201
48069-05070	TOYOTA	72-02-202
48069-09040	TOYOTA	72-02-248
48069-0F010	TOYOTA	72-02-222
48069-0H010	TOYOTA	72-02-206
48069-12110	TOYOTA	111-02-2011
48069-12130	TOYOTA	72-02-216
48069-12171	TOYOTA	72-02-218
48069-12260	TOYOTA	72-02-220
48069-19045	TOYOTA	71-02-291
48069-20221	TOYOTA	72-02-212
48069-20381	TOYOTA	72-02-214
48069-26130	TOYOTA	71-02-202
48069-28120	TOYOTA	72-02-238

O.E.M. names and numbers are used for reference purposes only Ashika assumes no responsibility for possible errors

OE		ASHIKA CODE
48069-33031	TOYOTA	72-02-208
48069-35080	TOYOTA	72-02-226
48069-42010	TOYOTA	72-02-240
48069-42040	TOYOTA	72-02-242
48069-42050	TOYOTA	72-02-244
48069-44010	TOYOTA	72-02-236
48069-49065	TOYOTA	72-02-204
48069-59035	TOYOTA	72-02-246
48069-60010	TOYOTA	72-02-234
48069-87209	DAIHATSU	71-06-610
48069-87501-000	DAIHATSU	71-06-607
48069-87706	DAIHATSU	71-06-698
48069-87710	DAIHATSU	72-06-600
48069-97202	DAIHATSU	71-06-604
48069-97203	DAIHATSU	71-06-606
48510-01G25	NISSAN	105-01-115
48510-01L25	NISSAN	105-01-106
48510-01N25	NISSAN	110-01-190
48510-01W00	NISSAN	108-01-104
48510-11A27	NISSAN	105-01-199
48510-20500	NISSAN	108-01-101R
48510-2T025	NISSAN	108-01-102R
48510-31G25	NISSAN	105-01-116
48510-35A26	NISSAN	105-01-199
48510-41W00	NISSAN	105-01-111
48510-50A25	NISSAN	105-01-126
48510-50A26	NISSAN	105-01-125
48510-50A27	NISSAN	105-01-125
48510-50W00	NISSAN	105-01-114R
48510-50Y25	NISSAN	105-01-129
48510-51A25	NISSAN	105-01-126
48510-53A25	NISSAN	105-01-126
48510-53A26	NISSAN	105-01-126
48510-70A25	NISSAN	105-01-199
48510-B5000	NISSAN	108-01-101R
48510-B9500	NISSAN	108-01-101R
48510-B9525	NISSAN	108-01-101R
48510-D0100	NISSAN	105-01-199
48510-D0125	NISSAN	105-01-199
48510-G2500	NISSAN	105-01-110R
48510-G2525	NISSAN	105-01-110R
48510-G5101	NISSAN	105-01-124R
48510-G5125	NISSAN	105-01-124R
48510-H1001	NISSAN	105-01-120R
48510-H1025	NISSAN	105-01-112R
48510-H5025	NISSAN	105-01-112R
48510-N8225	NISSAN	105-01-123R
48510-N8425	NISSAN	105-01-113R
48510-Q0125	NISSAN	105-01-107
48510-R8000	NISSAN	108-01-102R
48510-R8025	NISSAN	108-01-102R
48510-S0125	NISSAN	105-01-107
48510-T3026	NISSAN	108-01-102R
48510-T3060	NISSAN	108-01-102R
48510-T3065	NISSAN	108-01-102R

OE		ASHIKA CODE
48510-U0100	NISSAN	105-01-122R
48510-V5001	NISSAN	105-01-108
48510-V5025	NISSAN	105-01-108
48510-V6225	NISSAN	105-01-108
48510-V6600	NISSAN	105-01-108
48510-V6625	NISSAN	105-01-108
48510-W5000	NISSAN	105-01-103R
48510-W5025	NISSAN	105-01-103R
48520-00QAH	NISSAN	111-01-160
48520-00QAJ	NISSAN	111-01-161
48520-00QAK	NISSAN	111-01-1000
48520-00QAL	NISSAN	111-01-1001
48520-00QAM	NISSAN	103-01-117
48520-00QAN	NISSAN	111-01-162
48520-00QAP	NISSAN	111-01-163
48520-01B25	NISSAN	111-01-190
48520-01E00	NISSAN	111-01-109
48520-01E25	NISSAN	111-01-109
48520-01E26	NISSAN	111-01-109
48520-01F25	NISSAN	111-01-122R
48520-01G25	NISSAN	111-01-140
48520-01G25	NISSAN	111-01-139
48520-01J00	NISSAN	111-01-158
48520-01J10	NISSAN	111-01-173
48520-01L25	NISSAN	111-01-130
48520-01P25	NISSAN	111-01-159
48520-01R25	NISSAN	111-01-186
48520-01W00	NISSAN	111-01-107
48520-02E00	NISSAN	111-01-109
48520-02E25	NISSAN	111-01-109
48520-02E26	NISSAN	111-01-109
48520-0C025	NISSAN	103-01-100
48520-0M025	NISSAN	111-01-109
48520-0M085	NISSAN	111-01-194
48520-0W025	NISSAN	111-01-146
48520-15U25	NISSAN	111-01-101
48520-17B25	NISSAN	111-01-190
48520-21P25	NISSAN	111-01-149
48520-27N25	NISSAN	111-01-175
48520-2S425	NISSAN	111-01-138
48520-31C00	NISSAN	111-01-155L
48520-31G25	NISSAN	111-01-142
48520-41L00	NISSAN	111-01-148
48520-41L25	NISSAN	111-01-148
48520-41L26	NISSAN	111-01-148
48520-41L27	NISSAN	111-01-148
48520-41W00	NISSAN	111-01-107
48520-4F125	NISSAN	111-01-181
48520-50A00	NISSAN	111-01-147
48520-50A25	NISSAN	111-01-147
48520-50A26	NISSAN	111-01-147
48520-50W00	NISSAN	111-01-112
48520-50Y25	NISSAN	111-01-109
48520-53E25	NISSAN	111-01-185
48520-61G25	NISSAN	111-01-196

OE		ASHIKA CODE
48520-71L25	NISSAN	111-01-194
48520-73J25	NISSAN	111-01-188
48520-7F001	NISSAN	111-01-189
48520-88E25	NISSAN	111-01-174
48520-A0600	NISSAN	111-01-102R
48520-AX600	NISSAN	111-01-165
48520-BM425	NISSAN	111-01-100
48520-C6079	NISSAN	111-01-151
48520-C8400	NISSAN	111-01-151
48520-C84100	NISSAN	111-01-151
48520-D0100	NISSAN	111-01-109
48520-D0125	NISSAN	111-01-109
48520-D0126	NISSAN	111-01-109
48520-EA01J	NISSAN	111-01-150
48520-G2525	NISSAN	111-01-102R
48520-G5101	NISSAN	111-01-155R
48520-G5125	NISSAN	111-01-155R
48520-G9502	NISSAN	111-0N-N010
48520-H1001	NISSAN	111-01-104R
48520-H5025	NISSAN	111-01-106R
48520-M0225	NISSAN	111-01-118
48520-M3025	NISSAN	111-01-118
48520-OP725	NISSAN	111-01-1002
48520-Q0125	NISSAN	111-01-116
48520-R8000	NISSAN	105-01-102L
48520-R8025	NISSAN	105-01-102L
48520-S0101	NISSAN	111-01-116
48520-S0102	NISSAN	111-01-116
48520-S0125	NISSAN	111-01-116
48520-T3026	NISSAN	105-01-102L
48520-T3060	NISSAN	105-01-102L
48520-T3065	NISSAN	105-01-102L
48520-U0100	NISSAN	111-01-102L
48520-U5200	NISSAN	111-01-102R
48520-V0100	NISSAN	111-01-122L
48520-V0125	NISSAN	111-01-199
48520-W1025	NISSAN	111-01-122R
48520-W5025	NISSAN	111-01-106R
48521-00QAF	NISSAN	103-01-112
48521-00QAG	NISSAN	103-01-113
48521-01F00	NISSAN	103-01-103
48521-01G25	NISSAN	111-01-141
48521-01L25	NISSAN	111-01-131
48521-01N25	NISSAN	111-01-195
48521-01W00	NISSAN	111-01-108
48521-0W025	NISSAN	103-01-120
48521-17B00	NISSAN	103-01-185
48521-1M210	NISSAN	76-01-191
48521-27N00	NISSAN	103-01-109
48521-2S425	NISSAN	111-01-111
48521-31G25	NISSAN	111-01-189
48521-35A00	NISSAN	103-01-105
48521-35A06	NISSAN	103-01-105
48521-35F00	NISSAN	103-01-101
48521-40U25	NISSAN	103-01-114

OE		ASHIKA CODE
48521-4M500	NISSAN	103-01-108
48521-4U000	NISSAN	103-01-111
48521-50400	NISSAN	76-01-190
48521-50W00	NISSAN	111-01-113R
48521-50Y00	NISSAN	76-01-190
48521-50Y25	NISSAN	111-01-108
48521-70A00	NISSAN	103-01-101
48521-70A06	NISSAN	103-01-101
48521-71L00	NISSAN	103-01-193
48521-71V06	NISSAN	111-01-187
48521-72E00	NISSAN	103-01-106
48521-72E06	NISSAN	111-01-180
48521-8H325	NISSAN	103-01-121
48521-A0600	NISSAN	111-01-103R
48521-D0100	NISSAN	103-01-101
48521-EA000	NISSAN	103-01-116
48521-G2525	NISSAN	111-01-126R
48521-G5101	NISSAN	111-01-156R
48521-G5125	NISSAN	111-01-156R
48521-H1001	NISSAN	111-01-105R
48521-H5025	NISSAN	111-01-105R
48521-M3070	NISSAN	103-01-104
48521-M7000	NISSAN	103-01-104
48521-N8425	NISSAN	111-01-154R
48521-P9001	NISSAN	103-01-103
48521-Q0125	NISSAN	111-01-117
48521-S0101	NISSAN	111-01-117
48521-S0102	NISSAN	111-01-117
48521-S0103	NISSAN	111-01-117
48521-S0125	NISSAN	111-01-117
48521-S0126	NISSAN	111-01-117
48521-U0100	NISSAN	111-01-103R
48521-U5200	NISSAN	111-01-103R
48521-W1000	NISSAN	103-01-103
48521-W1001	NISSAN	103-01-103
48521-W5025	NISSAN	111-01-105R
48527-1U61A	NISSAN	111-01-167
48530-01G00	NISSAN	59-01-118
48530-01G25	NISSAN	59-01-118
48530-04C00	NISSAN	105-01-101
48530-18V00	NISSAN	59-01-126
48530-20V00	NISSAN	59-01-126
48530-21400	NISSAN	59-01-101
48530-31G25	NISSAN	59-01-120
48530-35G25	NISSAN	59-01-119
48530-B9500	NISSAN	59-01-102
48530-B9510	NISSAN	59-01-102
48530-G3701	NISSAN	59-01-180
48530-G3710	NISSAN	59-01-180
48530-G5101	NISSAN	59-01-127
48530-G5701	NISSAN	59-01-128
48530-Y9500	NISSAN	105-01-101
48560-09G25	NISSAN	27-01-113
48560-0F000	NISSAN	111-0N-N028
48560-G9502	NISSAN	111-0N-N011

O.E.M. names and numbers are used for reference purposes only Ashika assumes no responsibility for possible errors

OE		ASHIKA CODE
48560-W5000	NISSAN	27-01-107
48560-W5025	NISSAN	27-01-107
48560-W5700	NISSAN	27-01-198
48560-W5725	NISSAN	27-01-198
48561-T3001	NISSAN	111-01-119
48561-T3025	NISSAN	111-01-119
48570-01J10	NISSAN	111-01-172
48570-11J00	NISSAN	111-01-152
48570-11J25	NISSAN	111-01-152
48570-31G25	NISSAN	111-01-189
48570-3S525	NISSAN	111-01-123
48570-61G25	NISSAN	111-01-197
48570-82100	NISSAN	111-01-110L
48570-C6079	NISSAN	111-01-152
48570-C8410	NISSAN	111-01-152
48570-G9501	NISSAN	111-0N-N009
48570-J5100	NISSAN	111-01-110L
48570-T3001	NISSAN	111-01-120
48571-T3025	NISSAN	111-01-120
48580-82100	NISSAN	111-01-110R
48580-J5100	NISSAN	111-01-110R
48610-60030	TOYOTA	72-02-229
48610-60050	TOYOTA	72-02-233
48620-60010	TOYOTA	72-02-231
48630-01G25	NISSAN	105-01-115
48630-01L25	NISSAN	105-01-106
48630-01N25	NISSAN	110-01-190
48630-01W00	NISSAN	108-01-104
48630-20500	NISSAN	108-01-101L
48630-2T025	NISSAN	105-01-102L
48630-31G25	NISSAN	105-01-116
48630-41W00	NISSAN	105-01-111
48630-50W00	NISSAN	105-01-114L
48630-60010	TOYOTA	72-02-228
48630-60020	TOYOTA	72-02-232
48630-B5000	NISSAN	108-01-101L
48630-B9500	NISSAN	108-01-101L
48630-B9525	NISSAN	108-01-101L
48630-G2500	NISSAN	105-01-110L
48630-G2525	NISSAN	105-01-110L
48630-G5101	NISSAN	105-01-124L
48630-G5125	NISSAN	105-01-124L
48630-H1000	NISSAN	105-01-120L
48630-H1001	NISSAN	105-01-120L
48630-N8225	NISSAN	105-01-123L
48630-N8425	NISSAN	105-01-113L
48630-Q0125	NISSAN	105-01-107
48630-R8025	NISSAN	105-01-102L
48630-S0125	NISSAN	105-01-107
48630-U0100	NISSAN	105-01-122L
48630-V5001	NISSAN	105-01-108
48630-V5025	NISSAN	105-01-108
48630-V5026	NISSAN	105-01-108
48630-V5401	NISSAN	105-01-108
48630-V5425	NISSAN	105-01-108

OE		ASHIKA CODE
48630-V6625	NISSAN	105-01-108
48630-W5025	NISSAN	105-01-103L
48632 26010	TOYOTA	GOM-241
48632 60010	TOYOTA	GOM-244
48632-30020	TOYOTA	GOM-211
48632-60020	TOYOTA	GOM-247
48635-26010	TOYOTA	GOM-242
48640-01F25	NISSAN	111-01-122L
48640-01N25	NISSAN	111-01-195
48640-31C00	NISSAN	111-01-155R
48640-50W00	NISSAN	111-01-112L
48640-60010	TOYOTA	72-02-230
48640-A0600	NISSAN	111-01-102L
48640-AX600	NISSAN	111-01-164
48640-EA01J	NISSAN	111-01-179
48640-G5101	NISSAN	111-01-155L
48640-G5125	NISSAN	111-01-155L
48640-H1001	NISSAN	111-01-104L
48640-H5025	NISSAN	111-01-106L
48640-N8425	NISSAN	111-01-153L
48640-U0100	NISSAN	111-01-102L
48640-U5200	NISSAN	111-01-102L
48640-W1025	NISSAN	111-01-122L
48640-W5025	NISSAN	111-01-106L
48641-01N25	NISSAN	111-01-193
48641-50W00	NISSAN	111-01-113L
48641-A0600	NISSAN	111-01-103L
48641-G2525	NISSAN	111-01-103R
48641-G5125	NISSAN	111-01-156L
48641-H1001	NISSAN	111-01-105L
48641-H5025	NISSAN	111-01-105L
48641-N8425	NISSAN	111-01-154L
48641-U0100	NISSAN	111-01-103L
48641-U0100	NISSAN	111-01-191
48641-W5025	NISSAN	111-01-105L
48647-1U61A	NISSAN	111-01-166
48647-JD01A	NISSAN	111-01-1004
48650-20020	TOYOTA	71-02-200
48654-12070	TOYOTA	GOM-236
48654-35010	TOYOTA	GOM-210
48654-60010	TOYOTA	GOM-246
48654-60030	TOYOTA	GOM-248
48655-12050	TOYOTA	GOM-237
48655-20050RH	TOYOTA	GOM-217
48655-20060LH	TOYOTA	GOM-218
48655-60010	TOYOTA	GOM-245
48655-60030	TOYOTA	GOM-249
48674-60010	TOYOTA	GOM-223
48702-60010	TOYOTA	GOM-243
48702-60020	TOYOTA	GOM-209
48802-87703	DAIHATSU	106-06-600
48810-05012	TOYOTA	106-02-207
48810-20010	TOYOTA	106-02-206
48810-20020	TOYOTA	106-02-207
48810-26020	TOYOTA	106-02-222

OE		ASHIKA CODE
48810-28010	TOYOTA	106-02-237
48810-28020	TOYOTA	106-02-230
48810-33010	TOYOTA	106-02-216
48810-60001	SUZUKI	111-08-801R
48810-60010	TOYOTA	106-02-224
48810-60040	TOYOTA	106-02-228
48810-60A00	SUZUKI	111-08-806R
48810-60B00	SUZUKI	111-08-805
48810-63002	SUZUKI	111-08-802R
48810-63J00	SUZUKI	111-08-821
48810-65D00	SUZUKI	111-08-817
48810-65J00	SUZUKI	111-08-800
48810-76G00	SUZUKI	111-08-805
48810-77E00	SUZUKI	111-08-806R
48810-78000	SUZUKI	111-08-804
48810-78001	SUZUKI	111-08-804
48810-78002	SUZUKI	111-08-804
48810-78A00	SUZUKI	111-08-815
48810-79000	SUZUKI	111-08-803R
48810-79J00	SUZUKI	111-08-822
48810-80000	SUZUKI	111-08-806R
48810-81A00	SUZUKI	111-08-819
48810-82000	SUZUKI	111-08-805
48810-83300	SUZUKI	111-08-806R
48810-83E00	SUZUKI	111-08-823
48810-83E02	SUZUKI	111-08-818
48810-84000	SUZUKI	111-08-812
48810-A78B00	DAEWOO	111-0W-D55
48810M84010	SUZUKI	111-08-8999
48810M84020	SUZUKI	111-08-8999
48815-0D100	TOYOTA	GOM-257
48815-0F010	TOYOTA	GOM-240
48815-10060	TOYOTA	GOM-220
48815-20020	TOYOTA	GOM-214
48815-20026	DAIHATSU	GOM-607
48815-20030	TOYOTA	GOM-215
48815-28061	TOYOTA	GOM-260
48815-30040	TOYOTA	GOM-262
48815-30050	TOYOTA	GOM-219
48815-42090	TOYOTA	GOM-254
48815-42100	TOYOTA	GOM-255
48815-60010	TOYOTA	GOM-207
48815-87601	DAIHATSU	GOM-608
48817-30010	TOYOTA	GOM-208
48819-52010	TOYOTA	106-02-239
48820-05012	TOYOTA	106-02-208
48820-0D010	TOYOTA	106-02-240
48820-20010	TOYOTA	106-02-201
48820-20030	TOYOTA	106-02-299
48820-20040	TOYOTA	106-02-208
48820-24010	TOYOTA	106-02-238
48820-26020	TOYOTA	106-02-221
48820-28010	TOYOTA	106-02-231
48820-28050	TOYOTA	106-02-218
48820-30010	TOYOTA	106-02-203

OE		ASHIKA CODE
48820-32010	TOYOTA	106-02-220
48820-33010	TOYOTA	106-02-298
48820-33020	TOYOTA	106-02-215
48820-35030	TOYOTA	106-02-225
48820-42010	TOYOTA	106-02-232
48820-42030	TOYOTA	106-02-235
48820-44020	TOYOTA	106-02-205
48820-47010	TOYOTA	106-02-204
48820-60001	SUZUKI	111-08-801L
48820-60010	TOYOTA	106-02-223
48820-60050	TOYOTA	106-02-227
48820-60A00	SUZUKI	111-08-813
48820-63002	SUZUKI	111-08-802L
48820-65D00	SUZUKI	111-08-816
48820-77E00	SUZUKI	111-08-813
48820-78A00	SUZUKI	111-08-814
48820-79000	SUZUKI	111-08-803L
48820-80000	SUZUKI	111-08-806L
48820-80001	SUZUKI	111-08-806L
48820-81A00	SUZUKI	111-08-820
48830-05020	TOYOTA	106-02-200
48830-12050	TOYOTA	106-02-202
48830-20010	TOYOTA	106-02-202
48830-21020	TOYOTA	106-02-213
48830-32010	TOYOTA	106-02-209
48830-33010	TOYOTA	106-02-217
48830-35020	TOYOTA	106-02-226
48830-42010	TOYOTA	106-02-233
48830-42020	TOYOTA	106-02-236
48830-48010	TOYOTA	106-02-219
48830-60030	TOYOTA	106-02-229
48830-60B00	SUZUKI	103-08-804
48830-60G00	SUZUKI	103-08-805
48830-63J00	SUZUKI	103-08-812
48830-65D00	SUZUKI	103-08-808
48830-65J00	SUZUKI	103-08-809
48830-75F00	SUZUKI	103-08-810
48830-77A00	SUZUKI	103-08-806
48830-78000	SUZUKI	103-08-801
48830-78001	SUZUKI	103-08-801
48830-78A00	SUZUKI	103-08-807
48830-79J00	SUZUKI	103-08-813
48830-79J10	SUZUKI	103-08-814
48830-82000	SUZUKI	103-08-802
48830-83E00	SUZUKI	103-08-815
48830-84000	SUZUKI	103-08-803
48830-86G00	SUZUKI	103-08-811
48830-A78B00	DAEWOO	103-0W-D51
48830-M70F00	SUZUKI	103-08-800
48830M84000	SUZUKI	111-08-8998
48830M84010	SUZUKI	111-08-8998
48840-21010	TOYOTA	106-02-212
48840-42010	TOYOTA	106-02-234
48850-73010	SUZUKI	111-08-808
48850-A60A00	NISSAN	111-0N-N054

O.E.M. names and numbers are used for reference purposes only Ashika assumes no responsibility for possible errors

OE		ASHIKA CODE
48870-80000	SUZUKI	111-08-807
48870-80001	SUZUKI	111-08-807
48870-80002	SUZUKI	111-08-807
48870-80060	SUZUKI	111-08-811
4887V002000000	SMART	111-0M-M00
49068-97202	DAIHATSU	71-06-601
49069-20260	TOYOTA	72-02-210
49069-97202	DAIHATSU	71-06-602
5-44350-095-0	ISUZU	103-09-999
5-44350-095-1	ISUZU	103-09-999
5-44350-095-2	ISUZU	103-09-999
5-44350-095-3	ISUZU	103-09-999
5-44352-015-0	ISUZU	111-09-902R
5-44352-015-1	ISUZU	111-09-902R
5-44352-015-2	ISUZU	111-09-902R
5-44352-016-0	ISUZU	111-09-902L
5-44352-016-1	ISUZU	111-09-902L
5-44352-016-2	ISUZU	111-09-902L
5-44352-026-0	ISUZU	111-09-904
5-44352-070-0	ISUZU	111-09-902R
5-44352-602-0	ISUZU	111-09-902R
5-44352-629-0	ISUZU	111-09-902R
5-44352-639-0	ISUZU	111-09-902R
5-51220-003-0	ISUZU	73-09-901
5-51220-029-1	ISUZU	73-09-901
5-51220-029-2	ISUZU	73-09-901
5-51220-033-0	ISUZU	73-09-901
5-51227-033-0	ISUZU	53-09-908R
5012 432AA	JEEP	73-09-900
5066373AA	CHRYSLER	111-0C-C12
50805-SR3-951	HONDA	GOM-406
50810-SM4-000	HONDA	GOM-402
50810-SR3-010	HONDA	GOM-402
50820-SR3-J02	HONDA	GOM-403
50820-SR3-J11	HONDA	GOM-407
50820-SR3-J11	HONDA	GOM-405
50841-SR3-030	HONDA	GOM-400
50842-SR3-030	HONDA	GOM-401
509110	TOYOTA	106-02-214
5094 A8	TOYOTA	GOM-232
5102V005000000	SMART	106-0M-M00
51220-S04-003	HONDA	73-04-416
51220-S5A-003	HONDA	73-04-403
51220-SB0-003	HONDA	73-04-404
51220-SD4-004	HONDA	73-04-499
51220-SD4-013	HONDA	73-04-499
51220-SD4-023	HONDA	73-04-499
51220-SE0-000	HONDA	73-04-404
51220-SK7-013	HONDA	73-04-404
51220-SL5-003	HONDA	73-04-499
51220-SL5-013	HONDA	73-04-499
51220-SM1-A01	HONDA	73-04-406
51220-SM1-A02	HONDA	73-04-406
51220-SM4-003	HONDA	73-04-406
51220-SM4-013	HONDA	73-04-406

OE		ASHIKA CODE
51220-SR3-003	HONDA	73-04-416
51270-SB0-003	HONDA	73-04-405
51270-SBO-013	HONDA	73-04-405
51270-SE0-043	HONDA	73-04-415
51270-SF1-003	HONDA	111-04-486
51306 SMG E02	HONDA	GOM-432
51306-S6D-005	HONDA	GOM-429
5131 C9	TOYOTA	GOM-235
51310-SP0-003	HONDA	106-04-403
51312-SR3-000	HONDA	71-04-410
51320-S04-003	HONDA	106-04-404
51320-S2G-003	HONDA	106-04-429
51320-S2H-003	HONDA	106-04-425
51320-S30-003	HONDA	106-04-431
51320-S5A-003	HONDA	106-04-415
51320-S84-A01	HONDA	106-04-405
51320-SAA-003	HONDA	106-04-427
51320-SEA-E01	HONDA	106-04-409
51320-SMG-E01	HONDA	106-04-400
51320-SP0-003	HONDA	106-04-428
51320-ST7-003	HONDA	106-04-401
51321-S2G-003	HONDA	106-04-430
51321-S2H-003	HONDA	106-04-424
51321-S5A-003	HONDA	106-04-414
51321-S84-A01	HONDA	106-04-406
51321-SAA-003	HONDA	106-04-426
51321-SEA-E01	HONDA	106-04-410
5135 651AB	JEEP	73-09-905
51350-000-010	HONDA	71-04-403
51350-634-003	HONDA	26-04-401
51350-659-010	HONDA	71-04-402
51350-659-325	HONDA	71-04-402
51350-671-000	HONDA	26-04-401
51350-671-003	HONDA	26-04-401
51350-671-013	HONDA	26-04-401
51350-671-033	HONDA	26-04-401
51350-671-405	HONDA	26-04-401
51350-692-000	HONDA	26-04-498
51350-692-010	HONDA	26-04-498
51350-692-020	HONDA	26-04-498
51350-692-030	HONDA	26-04-498
51350-692-040	HONDA	26-04-498
51350-692-050	HONDA	26-04-498
51350-692-640	HONDA	26-04-498
51350-S04-000	HONDA	72-04-413
51350-S10-G00	HONDA	72-04-421
51350-S2H-G01	HONDA	72-04-425
51350-S50-G01	HONDA	72-04-433
51350-S6D-G00	HONDA	72-04-415
51350-S9A-010	HONDA	72-04-423
51350-SA0-00	HONDA	71-04-403
51350-SA0-010	HONDA	71-04-403
51350-SA0-020	HONDA	71-04-403
51350-SA0-030	HONDA	71-04-403
51350-SA0-325	HONDA	71-04-403

OE		ASHIKA CODE
51350-SA5-000	HONDA	26-04-489
51350-SA5-003	HONDA	26-04-489
51350-SA5-010	HONDA	26-04-496
51350-SA5-013	HONDA	26-04-489
51350-SA5-013A	HONDA	73-04-498
51350-SA5-020	HONDA	26-04-496
51350-SAA-E01	HONDA	72-04-427
51350-SEA-E01	HONDA	72-04-405
51350-SMG-E05	HONDA	72-04-417
51350-SR3-020	HONDA	72-04-409
51351-SB2-013	HONDA	26-04-495
51351-SB2-672	HONDA	26-04-495
51351-SB6-931	HONDA	26-04-495
51355-S1A-E00	HONDA	71-04-409
51355-SH3-020	HONDA	71-04-413
51355-SK3-000	HONDA	111-04-489
51355-SM4-040	HONDA	71-04-401
51355-SV7-A00	HONDA	71-04-407
51360-000-010	HONDA	71-04-403
51360-634-003	HONDA	26-04-401
51360-659-010	HONDA	71-04-402
51360-659-325	HONDA	71-04-402
51360-671-000	HONDA	26-04-401
51360-671-003	HONDA	26-04-401
51360-671-013	HONDA	26-04-401
51360-671-033	HONDA	26-04-401
51360-671-405	HONDA	26-04-401
51360-692-010	HONDA	26-04-498
51360-692-020	HONDA	26-04-498
51360-692-030	HONDA	26-04-498
51360-692-040	HONDA	26-04-498
51360-692-050	HONDA	26-04-498
51360-692-640	HONDA	26-04-498
51360-S04-G00	HONDA	72-04-412
51360-S10-G00	HONDA	72-04-420
51360-S2H-G01	HONDA	72-04-424
51360-S50-G01	HONDA	72-04-432
51360-S6D-G00	HONDA	72-04-414
51360-S9A-010	HONDA	72-04-422
51360-SA0-000	HONDA	71-04-403
51360-SA0-010	HONDA	71-04-403
51360-SA0-020	HONDA	71-04-403
51360-SA0-030	HONDA	71-04-403
51360-SA5-003	HONDA	26-04-494
51360-SA5-010	HONDA	26-04-493
51360-SA5-013	HONDA	26-04-494
51360-SA5-020	HONDA	26-04-493
51360-SAA-E01	HONDA	72-04-426
51360-SEA-E01	HONDA	72-04-404
51360-SMG-E05	HONDA	72-04-416
51360-SR3-020	HONDA	72-04-408
51361-SB2-013	HONDA	111-04-481
51365-S1A-E00	HONDA	71-04-408
51365-SH3-020	HONDA	71-04-414
51365-SK3-000	HONDA	111-04-488

OE		ASHIKA CODE
51365-SM4-040	HONDA	71-04-400
51365-SV7-A00	HONDA	71-04-406
51391 S5A 024	HONDA	GOM-430
51391-S04-005	HONDA	GOM-427
51391-SEA-004	HONDA	GOM-420
51392-S5A-004	HONDA	GOM-431
51392-SR3-004	HONDA	GOM-409
51393-SEA-004	HONDA	GOM-421
51393-SM4-013	HONDA	GOM-415
51395 SMG E03	HONDA	GOM-435
51395-SR3-N02	HONDA	GOM-410
51396 SMG E03	HONDA	GOM-434
51396-SR3-N02	HONDA	GOM-411
51398 SMG E01	HONDA	GOM-433
5143 555AB	JEEP	111-09-914
5143 556AB	JEEP	111-09-913
51450-S04-023	HONDA	72-04-411
51450-S10-020	HONDA	72-04-419
51450-S1A-E01	HONDA	72-04-401
51450-SDA-A01	HONDA	72-04-403
51450-SGO-020	HONDA	111-04-485
51450-SH3-000	HONDA	111-04-483
51450-SH3-010	HONDA	111-04-483
51450-SH3-023-WA	HONDA	73-04-497
51450-SM4-023	HONDA	73-04-496
51450-SP0-033	HONDA	72-04-429
51450-SR3-023	HONDA	72-04-407
51450-SZ3-013	HONDA	72-04-431
51459-SE0-000	HONDA	26-04-492
51459-SE0-003	HONDA	26-04-492
51459-SEO-000	HONDA	26-04-492
51460 SV4 000	HONDA	73-04-495
51460-S04-023	HONDA	72-04-410
51460-S10-020	HONDA	72-04-418
51460-S1A-E01	HONDA	72-04-400
51460-SDA-A01	HONDA	72-04-402
51460-SGO-020	HONDA	111-04-484
51460-SH3-000	HONDA	111-04-482
51460-SH3-010	HONDA	111-04-482
51460-SH3-023-WA	HONDA	73-04-497
51460-SP0-033	HONDA	72-04-428
51460-SR3-023	HONDA	72-04-406
51460-SV4-A00	HONDA	73-04-495
51460-SZ3-013	HONDA	71-04-411
51460-SZ3-013	HONDA	72-04-430
51469-SE0-000	HONDA	26-04-491
51469-SE0-003	HONDA	26-04-491
51760 2G000	KIA	73-0K-K01
51760-1G000	HYUNDAI	73-0H-H04
51760-2E000	HYUNDAI	73-0H-H14
51760-38000	HYUNDAI	73-0H-H08
51760-3K000	HYUNDAI	73-0H-H10
51810 SH3 004	HONDA	GOM-423
51810-SDA-A01	HONDA	GOM-419
51810-SM4-004	HONDA	GOM-414

O.E.M. names and numbers are used for reference purposes only Ashika assumes no responsibility for possible errors

OE		ASHIKA CODE
52001162	JEEP	111-OJ-J013
52003-360	JEEP	106-09-903
52005738	JEEP	111-00-J006
52005739	JEEP	111-00-J010
52005740	JEEP	111-00-J003
52005741	JEEP	111-00-J004
52006592	JEEP	111-00-J011
52037 849	JEEP	106-09-902
52037994	JEEP	111-09-903
520672	DAEWOO	103-0W-D52
52087710	JEEP	111-00-J007
52087711	JEEP	111-00-J007
52088 283	JEEP	106-09-905
52088 461	JEEP	111-09-907
52088 511	JEEP	111-09-908
52088 869AA	JEEP	111-09-910
52088 870AA	JEEP	111-09-909
52088208-AC	JEEP	111-OJ-J014
52088217-AB	JEEP	111-OJ-J012
52088312	JEEP	111-00-J000
52088437	JEEP	106-09-904
52089 467AB	JEEP	106-09-906
520898	DAEWOO	103-0W-D53
521136	DAEWOO	111-0W-D55
521255	DAEWOO	103-0W-D54
521564	CHEVROLET	103-0C-C04
52320-S04-003	HONDA	106-04-413
52320-S10-003	HONDA	106-04-421
52320-S30-003	HONDA	106-04-432
52320-S5A-013	HONDA	106-04-417
52320-S84-A01	HONDA	106-04-407
52320-S9A-003	HONDA	106-04-423
52320-SNA-A01	HONDA	106-04-419
52321-S04-003	HONDA	106-04-412
52321-S10-003	HONDA	106-04-420
52321-S5A-013	HONDA	106-04-416
52321-S9A-003	HONDA	106-04-422
52321-SNA-A01	HONDA	106-04-418
52325-S84-A01	HONDA	106-04-408
52365-SM4-005	HONDA	GOM-413
52370-SR3-J00	HONDA	GOM-416
52390-SE0-013	HONDA	26-04-490
52390-SE0-023	HONDA	26-04-490
52390-SE0-033	HONDA	26-04-490
52390-SE0-043	HONDA	26-04-490
52390-SM1-A03	HONDA	71-04-405
52390-SP0-013	HONDA	26-04-410R
52390-SR3-000	HONDA	71-04-412
52400-SM1-A03	HONDA	71-04-404
52400-SP0-013	HONDA	26-04-410L
5272098	CHRYSLER	GOM-C13
5274470	CHRYSLER	111-0C-C10
5289 486AC	JEEP	106-09-907
53010-S10-000	HONDA	103-04-416
53010-S2H-J01	HONDA	103-04-418

OE		ASHIKA CODE
53010-S50-003	HONDA	103-04-423
53010-S84-A01	HONDA	103-04-407
53010-SAA-J01	HONDA	103-04-419
53010-SDA-A01	HONDA	103-04-411
53010-SMG-E01	HONDA	103-04-414
53010-SR3-010	HONDA	103-04-499
53010-SS0-000	HONDA	103-04-498
53010-SV4-000	HONDA	103-04-413
53010-SW5-000	HONDA	103-04-421
53010-SW5-003	HONDA	103-04-422
53011-SAA-J01	HONDA	103-04-420
53011-SMG-E01	HONDA	103-04-415
53503-21000	HYUNDAI	53-0H-H52R
53521-634-000	HONDA	103-04-401
53521-671-000	HONDA	103-04-402
53521-671-010	HONDA	103-04-402
53521-689-000	HONDA	103-04-402
53521-689-003	HONDA	103-04-402
53521-692-003	HONDA	103-04-403
53521-S5A-003	HONDA	103-04-400
53521-S9A-003	HONDA	103-04-417
53521-SA0-003	HONDA	103-04-403
53521-SA5-000	HONDA	103-04-404
53521-SA5-003	HONDA	103-04-404
53521-SB0-000	HONDA	103-04-406
53521-SB0-003	HONDA	103-04-406
53521-SB2-003	HONDA	103-04-405
53521-SB2-013	HONDA	103-04-405
53521-SD4-023	HONDA	103-04-497
53521-SE0-000	HONDA	103-04-403
53521-SE0-003	HONDA	103-04-403
53521-SE0-013	HONDA	103-04-403
53521-SE0-951	HONDA	103-04-403
53521-SF1-003	HONDA	103-04-406
53521-SH3-003	HONDA	103-04-409
53521-SK3-003	HONDA	103-04-412
53521-SK7-003	HONDA	103-04-412
53521-SL4-014	HONDA	103-04-496
53521-SM4-003	HONDA	103-04-410
53521-SM4-013	HONDA	103-04-410
53521-SP0-004	HONDA	103-04-495
53540-611-010	HONDA	111-04-401
53540-611-020	HONDA	111-04-401
53540-634-000	HONDA	111-04-401
53540-659-003	HONDA	111-04-401
53540-671-010	HONDA	111-04-401
53540-679-004	HONDA	111-04-401
53540-S1A-E01	HONDA	111-04-409
53540-S30-005	HONDA	111-04-425
53540-SA0-002	HONDA	111-04-401
53540-SA0-003	HONDA	111-04-401
53540-SA0-004	HONDA	111-04-401
53540-SAA-003	HONDA	111-04-419
53540-SB0-003	HONDA	111-04-401
53540-SB2-002	HONDA	111-04-401

OE		ASHIKA CODE
53540-SB2-003	HONDA	111-04-401
53540-SB2-013	HONDA	111-04-401
53540-SC2-003	HONDA	111-04-401
53540-SD4-003	HONDA	111-04-405R
53540-SDA-A01	HONDA	111-04-411
53540-SF1-004	HONDA	111-04-499
53540-SH3-003	HONDA	111-04-406R
53540-SH3-013	HONDA	111-04-406R
53540-SK3-E01	HONDA	111-04-487
53540-SM4-003	HONDA	111-04-404R
53540-SM4-004	HONDA	111-04-404R
53540-SMG-003	HONDA	111-04-413
53540-SMJ-003	HONDA	111-04-415
53540-SP0-013	HONDA	111-04-402R
53540-SP0-023	HONDA	111-04-402R
53540-SR0-A01	HONDA	111-04-406R
53540-SR3-003	HONDA	111-04-406R
53540-SS0-003	HONDA	111-04-423
53540-ST7-003	HONDA	111-04-406R
53540-SV4-003	HONDA	111-04-407R
53540-SX0-003	HONDA	111-04-407R
53540-SX8-T01	HONDA	111-04-417
53540-SZ3-003	HONDA	111-04-421
535400-SC2-004	HONDA	111-04-401
53541-S5A-003	HONDA	111-04-400
53560-S1A-E01	HONDA	111-04-410
53560-S30-005	HONDA	111-04-424
53560-SAA-003	HONDA	111-04-418
53560-SD4-003	HONDA	111-04-405L
53560-SDA-A01	HONDA	111-04-412
53560-SH3-003	HONDA	111-04-406L
53560-SH3-013	HONDA	111-04-406L
53560-SM4-003	HONDA	111-04-404L
53560-SM4-004	HONDA	111-04-404L
53560-SMG-003	HONDA	111-04-414
53560-SMJ-003	HONDA	111-04-416
53560-SP0-013	HONDA	111-04-402L
53560-SP0-023	HONDA	111-04-402L
53560-SR0-A01	HONDA	111-04-406L
53560-SR3-003	HONDA	111-04-406L
53560-SS0-003	HONDA	111-04-422
53560-ST7-003	HONDA	111-04-406L
53560-SV4-003	HONDA	111-04-407L
53560-SX0-003	HONDA	111-04-407L
53560-SZ3-003	HONDA	111-04-420
54403-38A00	HYUNDAI	73-0H-H07
54410-38000	HYUNDAI	72-0H-H28
54410-43004	HYUNDAI	111-0H-H003
54410-43005	HYUNDAI	111-0H-H003
54417-43000	HYUNDAI	111-0H-H001
54417-43A00	HYUNDAI	53-0H-H77
54417-44000	HYUNDAI	111-0H-H97
54417-4A000	HYUNDAI	53-0H-H77
54420-38000	HYUNDAI	72-0H-H27
54423-00QAA	NISSAN	GOM-143

OE		ASHIKA CODE
54423-B9500	NISSAN	GOM-107
54430-31000	HYUNDAI	73-0H-H55
54430-31300	HYUNDAI	73-0H-H55
54430-3F600	HYUNDAI	73-0H-H09
54430-43004	HYUNDAI	111-0H-H002
54430-43005	HYUNDAI	111-0H-H002
54431-44000	HYUNDAI	111-0H-H98
54440-H1000	HYUNDAI	73-0H-H11
54443-3K000	HYUNDAI	GOM-H21
54457-43000	HYUNDAI	111-0H-H001
54476-01B00	NISSAN	GOM-147
54476-01G00	NISSAN	GOM-118
54476-01J00	NISSAN	GOM-126
54476-01W00	NISSAN	GOM-115
54476-F0200	NISSAN	GOM-114
54477-T6000	NISSAN	GOM-115
54479-50W00	NISSAN	GOM-115
54499-W2210	NISSAN	26-01-195
54500 07200	KIA	72-0K-K14
54500 1D000	KIA	72-0K-K04
54500 2H000	KIA	72-0K-K08
54500 4D001	KIA	72-0K-K06
54500-00QAC	NISSAN	72-01-111
54500-00QAH	NISSAN	72-01-113
54500-02050	HYUNDAI	72-0H-H04
54500-02052	HYUNDAI	72-0H-H04
54500-0M010	NISSAN	72-01-105
54500-0W001	NISSAN	72-01-129
54500-17000	HYUNDAI	72-0H-H22
54500-1C000	HYUNDAI	72-0H-H20
54500-1E000	HYUNDAI	72-0H-H10
54500-1E100	HYUNDAI	72-0H-H08
54500-21B00	NISSAN	111-01-184
54500-22000	HYUNDAI	73-0H-H54L
54500-22200	HYUNDAI	73-0H-H54L
54500-25000	HYUNDAI	72-0H-H06
54500-29000	HYUNDAI	73-0H-H55L
54500-2B100	HYUNDAI	72-0H-H26
54500-2C000	HYUNDAI	72-0H-H12
54500-2D000	HYUNDAI	72-0H-H14
54500-2F500	NISSAN	72-01-123
54500-30R10	NISSAN	111-01-178
54500-33000	HYUNDAI	73-0H-H53L
54500-34000	HYUNDAI	73-0H-H66L
54500-38000	HYUNDAI	72-0H-H30
54500-38011	HYUNDAI	72-0H-H32
54500-41U00	NISSAN	72-01-115
54500-44B00	NISSAN	72-01-100
54500-4F102	NISSAN	72-01-100
54500-4F105	NISSAN	72-01-100
54500-50J10	NISSAN	72-01-102
54500-5U300	NISSAN	72-01-109
54500-67L00	NISSAN	71-01-193
54500-6F600	NISSAN	72-01-117
54500-7C350	NISSAN	72-01-127

O.E.M. names and numbers are used for reference purposes only Ashika assumes no responsibility for possible errors

OE		ASHIKA CODE
54500-86J00	NISSAN	72-01-102
54500-8H310	NISSAN	72-01-131
54500-AV600	NISSAN	72-01-125
54500-AX600	NISSAN	72-01-119
54500-BM300	NISSAN	72-01-107
54500-JD000	NISSAN	72-01-135
54500-W2210	NISSAN	71-01-190
54501 07200	KIA	72-0K-K13
54501 1D000	KIA	72-0K-K03
54501 2H000	KIA	72-0K-K07
54501 4D001	KIA	72-0K-K05
54501-00QAC	NISSAN	72-01-110
54501-00QAH	NISSAN	72-01-112
54501-02050	HYUNDAI	72-0H-H03
54501-02052	HYUNDAI	72-0H-H03
54501-0M010	NISSAN	72-01-104
54501-0W001	NISSAN	72-01-128
54501-17000	HYUNDAI	72-0H-H21
54501-1C000	HYUNDAI	72-0H-H19
54501-1E000	HYUNDAI	72-0H-H09
54501-1E100	HYUNDAI	72-0H-H07
54501-21B00	NISSAN	111-01-177
54501-22000	HYUNDAI	73-0H-H54R
54501-22200	HYUNDAI	73-0H-H54R
54501-25000	HYUNDAI	72-0H-H05
54501-26000	HYUNDAI	72-0H-H01
54501-29000	HYUNDAI	73-0H-H55R
54501-2B100	HYUNDAI	72-0H-H25
54501-2C000	HYUNDAI	72-0H-H11
54501-2D000	HYUNDAI	72-0H-H13
54501-2F500	NISSAN	72-01-122
54501-33000	HYUNDAI	73-0H-H53R
54501-34000	HYUNDAI	73-0H-H66R
54501-38000	HYUNDAI	72-0H-H29
54501-38011	HYUNDAI	72-0H-H31
54501-3A100	HYUNDAI	72-0H-H34
54501-41U01	NISSAN	72-01-114
54501-44B00	NISSAN	72-01-101
54501-4F102	NISSAN	72-01-101
54501-4F105	NISSAN	72-01-101
54501-50J10	NISSAN	72-01-103
54501-5U300	NISSAN	72-01-108
54501-67L00	NISSAN	71-01-194
54501-6F600	NISSAN	72-01-116
54501-7C350	NISSAN	72-01-126
54501-86J00	NISSAN	72-01-103
54501-8H310	NISSAN	72-01-130
54501-AV605	NISSAN	72-01-124
54501-AX600	NISSAN	72-01-118
54501-BM400	NISSAN	72-01-106
54501-JD000	NISSAN	72-01-134
54502-01G90	NISSAN	71-01-101
54502-21000	HYUNDAI	53-0H-H52L
54502-24001	HYUNDAI	72-0H-H24
54502-26000	HYUNDAI	72-0H-H02

OE		ASHIKA CODE
54502-3A100	HYUNDAI	72-0H-H33
54503-00QAA	NISSAN	72-01-120
54503-01G90	NISSAN	71-01-100
54503-22A00	HYUNDAI	73-0H-H57
54503-24001	HYUNDAI	72-0H-H23
54503-25A00	HYUNDAI	73-0H-H03
54503-31600	HYUNDAI	73-0H-H57
54503-34A00	HYUNDAI	53-0H-H64
54503-38A00	HYUNDAI	73-0H-H05
54503-3BA00	HYUNDAI	73-0H-H01
54503-DA000	HYUNDAI	73-0H-H01
54506-B9500	NISSAN	GOM-108
54510 3E001	KIA	72-0K-K16
54510-43150	HYUNDAI	111-0H-H005
54510-4B001	HYUNDAI	71-0H-H02
54520-11011	HYUNDAI	53-0H-H51
54520-14200	HYUNDAI	53-0H-H51
54520-31600	HYUNDAI	73-0H-H57
54520-3E001	KIA	72-0K-K15
54524-2F010	NISSAN	102-01-100
54524-43000	HYUNDAI	53-0H-H60
54524-43001	HYUNDAI	53-0H-H60
54524-86J10	NISSAN	102-01-100
54524-AV600	NISSAN	71-01-103
54525-2F010	NISSAN	102-01-101
54525-86J10	NISSAN	102-01-101
54525-AV600	NISSAN	71-01-102
54530 07000	KIA	73-0K-K03
54530 4D000	KIA	73-0K-K02
54530-02050	HYUNDAI	73-0H-H02
54530-02050	HYUNDAI	111-0H-H90
54530-14200	HYUNDAI	53-0H-H51
54530-21000	HYUNDAI	53-0H-H52L
54530-21100	HYUNDAI	53-0H-H52L
54530-21A00	HYUNDAI	53-0H-H52L
54530-24000	HYUNDAI	73-0H-H53
54530-24A00	HYUNDAI	73-0H-H53
54530-28000	HYUNDAI	53-0H-H54
54530-28A00	HYUNDAI	53-0H-H54
54530-29000	HYUNDAI	106-0H-H55
54530-2B000	HYUNDAI	73-0H-H06
54530-31000	HYUNDAI	53-0H-H56
54530-31300	HYUNDAI	53-0H-H56
54530-31600	HYUNDAI	73-0H-H57
54530-37000	HYUNDAI	53-0H-H64
54530-3B000	HYUNDAI	73-0H-H13
54530-4A000	HYUNDAI	53-0H-H66
54530-4AA00	HYUNDAI	53-0H-H66
54535 01B00	NISSAN	GOM-146
54540-21000	HYUNDAI	53-0H-H52R
54540-21100	HYUNDAI	53-0H-H52R
54540-21A00	HYUNDAI	53-0H-H52R
54540-43150	HYUNDAI	111-0H-H004
54540-4B001	HYUNDAI	71-0H-H01
54550-H1000	HYUNDAI	73-0H-H12

OE		ASHIKA CODE
54551 07000	KIA	GOM-K26
54551 1D000	KIA	GOM-K09
54551 2B000	HYUNDAI	GOM-H18
54551 2H000	KIA	GOM-K17
54551 4D000	KIA	GOM-K13
54551-02000	HYUNDAI	GOM-H03
54551-1E000	HYUNDAI	GOM-H10
54551-25000	HYUNDAI	GOM-H06
54551-38000	HYUNDAI	GOM-H19
54551-3A000	HYUNDAI	GOM-H26
54551-3K000	HYUNDAI	GOM-H23
54552-3K000	HYUNDAI	GOM-H24
54555-22100	HYUNDAI	GOM-H04
54555-25000	HYUNDAI	GOM-H07
54555-3A100	HYUNDAI	GOM-H27
54556-22100	HYUNDAI	GOM-H05
54560 00QAB	NISSAN	GOM-145
54560-01G00	NISSAN	GOM-110
54560-01J00	NISSAN	GOM-119
54560-50A00	NISSAN	GOM-138
54560-AX600	NISSAN	GOM-150
54570 3E000	KIA	73-0K-K05
54570-00QAA	NISSAN	GOM-142
54570-69Y10	NISSAN	GOM-139
54570-AX600	NISSAN	GOM-151
54580 3E001	KIA	GOM-K28
54584 07000	KIA	GOM-K25
54584 1D000	KIA	GOM-K08
54584 2B000	HYUNDAI	GOM-H17
54584 2H000	KIA	GOM-K16
54584 4D000	KIA	GOM-K12
54584-17000	HYUNDAI	GOM-H15
54584-1G000	HYUNDAI	GOM-H09
54584-38000	HYUNDAI	GOM-H20
54584-3K000	HYUNDAI	GOM-H22
54590 3E000	KIA	GOM-K29
54613 00QAD	NISSAN	GOM-144
54613-01J11	NISSAN	GOM-123
54613-06J10	NISSAN	GOM-124
54613-0F001	NISSAN	GOM-125
54613-14900	NISSAN	GOM-113
54613-32G00	NISSAN	GOM-128
54613-43G00	NISSAN	GOM-121
54613-9U000	NISSAN	GOM-152
54613-JD03A	NISSAN	GOM-165
54613-JD18C	NISSAN	GOM-166
54613-W1410	NISSAN	GOM-122
54616-00QAA	NISSAN	106-01-107
54616-00QAB	NISSAN	106-01-106
54616-00QAC	NISSAN	106-01-119
54618-00QAA	NISSAN	106-01-105
54618-01G00	NISSAN	106-01-113
54618-02E00	NISSAN	106-01-114
54618-0F000	NISSAN	106-01-125
54618-0W001	NISSAN	106-01-127

OE		ASHIKA CODE
54618-4M400	NISSAN	106-01-100
54618-4U000	NISSAN	106-01-103
54618-50J20	NISSAN	106-01-120
54618-50Y00	NISSAN	106-01-101
54618-56511	NISSAN	106-01-102
54618-8H300	NISSAN	106-01-129
54618-9C002	NISSAN	111-0N-N019
54618-9U00A	NISSAN	106-01-111
54618-AU000	NISSAN	106-01-121
54618-AX600	NISSAN	106-01-110
54618-EA010	NISSAN	106-01-115
54618-JD00A	NISSAN	106-01-133
54618-OE000	NISSAN	106-01-108
54668-4U000	NISSAN	106-01-104
54668-8H300	NISSAN	106-01-130
54668-9C000	NISSAN	111-0N-N020
54668-AU000	NISSAN	106-01-122
54668-EA010	NISSAN	106-01-116
54668-JD00A	NISSAN	106-01-132
54810 3E000	KIA	106-0K-K21
54811 3E010	KIA	106-0K-K22
54811 3E060	KIA	106-0K-K23
54812 07100	KIA	GOM-K24
54812-1G100	HYUNDAI	GOM-H08
54813 1H100	KIA	GOM-K05
54813 2H000	KIA	GOM-K14
54813 4D000	KIA	GOM-K10
54813-3A000	HYUNDAI	GOM-H25
54813-3K100	HYUNDAI	GOM-H16
54820 FD000	KIA	106-0K-K18
54820-02000	HYUNDAI	106-0H-H07
54822-H1000	HYUNDAI	106-0H-H28
54823-H1000	HYUNDAI	106-0H-H27
54825-22000	HYUNDAI	106-0H-H01
54830 07000	KIA	106-0K-K12
54830 2F000	KIA	106-0K-K10
54830 2H000	KIA	106-0K-K08
54830 4D000	KIA	106-0K-K06
54830 FD000	KIA	106-0K-K17
54830-1C000	HYUNDAI	106-0H-H10
54830-1G000	HYUNDAI	106-0H-H06
54830-25010	HONDA	106-0H-H02
54830-25020	HONDA	106-0H-H03
54830-26000	HYUNDAI	106-0H-H14
54830-28000	HYUNDAI	106-0H-H51
54830-29000	HYUNDAI	111-0H-H93
54830-29000	HYUNDAI	106-0H-H56
54830-2B000	HYUNDAI	106-0H-H18
54830-2C000	HYUNDAI	106-0H-H08
54830-2E000	HYUNDAI	106-0H-H31
54830-2G000	KIA	106-0K-K03
54830-34000	HYUNDAI	106-0H-H44
54830-34500	HYUNDAI	106-0H-H53
54830-36010	HYUNDAI	106-0H-H53
54830-38100	HYUNDAI	106-0H-H22

O.E.M. names and numbers are used for reference purposes only Ashika assumes no responsibility for possible errors

OE		ASHIKA CODE
54830-38110	HYUNDAI	106-0H-H24
54830-39000	HYUNDAI	106-0H-H33
54830-3A000	HYUNDAI	106-0H-H30
54830-3L000	HYUNDAI	106-0H-H25
54830-4A000	HYUNDAI	106-0H-H58
54830-4A003	HYUNDAI	106-0H-H58
54830-4A800	HYUNDAI	106-0H-H58
54830-4A802	HYUNDAI	106-0H-H58
54830-M2000	HYUNDAI	106-0H-H57L
54840 07000	KIA	106-0K-K13
54840 2F000	KIA	106-0K-K11
54840 4D000	KIA	106-0K-K05
54840-1C000	HYUNDAI	106-0H-H11
54840-1G000	HYUNDAI	106-0H-H05
54840-26000	HYUNDAI	106-0H-H15
54840-2B000	HYUNDAI	106-0H-H19
54840-2C000	HYUNDAI	106-0H-H09
54840-3A000	HYUNDAI	106-0H-H29
54840-M2000	HYUNDAI	106-0H-H57R
55045-07200	NISSAN	GOM-131
55045-10W00	NISSAN	GOM-116
55045-31000	NISSAN	GOM-134
55045-G2500	NISSAN	GOM-120
55046-01600	NISSAN	GOM-130
55046-01G00	NISSAN	GOM-109
55046-C6000	NISSAN	GOM-117
55046-C6000	NISSAN	GOM-117
55046-G9600	NISSAN	GOM-117
55130 4D000	KIA	GOM-K11
55130-34A00	HYUNDAI	53-0H-H65
55130-37000	HYUNDAI	53-0H-H65
55135-01J00	NISSAN	GOM-127
551360-692-000	HONDA	26-04-498
55201-34000	HYUNDAI	53-0H-H67
55250-34000	HYUNDAI	73-0H-H68
55502-00QAA	NISSAN	72-01-121
55513 2G000	KIA	GOM-K06
55530 1D000	KIA	106-0K-K04
55530 1F000	KIA	106-0H-H32
55530 1H000	KIA	106-0K-K09
55530 4D000	KIA	106-0K-K07
55530-17000	HYUNDAI	106-0H-H13
55530-26600	HYUNDAI	106-0H-H16
55530-29000	HYUNDAI	111-0H-H91
55530-2B000	HYUNDAI	106-0H-H20
55530-2E000	HYUNDAI	106-0H-H32
55530-38000	HYUNDAI	106-0H-H21
55530-38600	HYUNDAI	106-0H-H23
55530-3K001	HYUNDAI	106-0H-H26
55530-4A001	HYUNDAI	106-0H-H12
55540-26600	HYUNDAI	106-0H-H17
55543 1H000	KIA	GOM-K15
55543 2G000	KIA	GOM-K07
55580-37020	HYUNDAI	106-0H-H54
55618-JD00A	NISSAN	106-01-135

OE		ASHIKA CODE
55619-JD00A	NISSAN	106-01-134
55830-25000	HYUNDAI	106-0H-H04
56112-09400	NISSAN	GOM-112
56112-0F000	NISSAN	GOM-112
56112-V0100	NISSAN	GOM-112
56113-60U05	NISSAN	GOM-112
56260-01J10	NISSAN	106-01-112
56260-0F001	NISSAN	106-01-126
56260-0W001	NISSAN	106-01-128
56261 AV610	NISSAN	106-01-123
56261-0E000	NISSAN	106-01-124
56261-0F600	NISSAN	106-01-198
56261-47B01	NISSAN	106-01-109
56261-4F725	NISSAN	106-01-198
56261-86J25	NISSAN	106-01-199
56261-90J01	NISSAN	106-01-199
56261-EA500	NISSAN	106-01-117
56261-EA510	NISSAN	106-01-118
56261-EQ000	NISSAN	106-01-131
56540 2H000	KIA	103-0K-K03
56540-02000	HYUNDAI	111-0H-H82
56540-21001	HYUNDAI	103-0H-H51
56540-21010	HYUNDAI	103-0H-H51
56540-21100	HYUNDAI	103-0H-H51
56540-22000	HYUNDAI	103-0H-H53
56540-24000	HYUNDAI	103-0H-H53
56540-24001	HYUNDAI	103-0H-H53
56540-25000	HYUNDAI	103-0H-H02
56540-28020	HYUNDAI	103-0H-H56
56540-43000	HYUNDAI	103-0H-H53
56801-14200	HYUNDAI	110-0H-H51
56820 07000	KIA	111-0K-K07
56820 2G000	KIA	111-0K-K02
56820 2G900	KIA	111-0K-K01
56820 2H000	KIA	111-0K-K06
56820 2H090	KIA	111-0K-K05
56820 3E000	KIA	111-0K-K08
56820 3E900	KIA	111-0K-K09
56820 4D000	KIA	111-0K-K04
56820 4D100	KIA	111-0K-K03
56820-02500	HYUNDAI	111-0H-H95
56820-0X000	HYUNDAI	111-0H-H18
56820-0X900	HYUNDAI	111-0H-H19
56820-11000	DAEWOO	111-0W-D81
56820-11060	HYUNDAI	111-0H-H52
56820-1E000	HYUNDAI	111-0H-H04
56820-1E900	HYUNDAI	111-0H-H03
56820-1G000	KIA	111-0K-K11
56820-1G900	KIA	111-0K-K10
56820-21000	HYUNDAI	111-0H-H53
56820-21100	HYUNDAI	111-0H-H53
56820-21110	HYUNDAI	111-0H-H53
56820-21120	HYUNDAI	111-0H-H53
56820-22000	HYUNDAI	111-0H-H06
56820-25000	HYUNDAI	111-0H-H01

OE		ASHIKA CODE
56820-28000	HYUNDAI	111-0H-H54
56820-28500	HYUNDAI	111-0H-H57
56820-2B000	HYUNDAI	111-0H-H08
56820-2B900	HYUNDAI	111-0H-H07
56820-2E000	HYUNDAI	111-0H-H17
56820-2E900	HYUNDAI	111-0H-H16
56820-31000	HYUNDAI	111-0H-H55
56820-36000	HYUNDAI	111-0H-H56
56820-38000	HYUNDAI	111-0H-H12
56820-38900	HYUNDAI	111-0H-H11
56820-3B000	HYUNDAI	111-0H-H05
56820-3K000	HYUNDAI	111-0H-H14
56820-3K010	HYUNDAI	111-0H-H13
56830-36000	HYUNDAI	106-0H-H52
56840-11200	HYUNDAI	59-0H-H52
56850-H1011	HYUNDAI	105-0H-H01
56872-43000	HYUNDAI	111-0H-H59
56872-43010	HYUNDAI	111-0H-H59
56872-44000	HYUNDAI	111-0H-H60L
56940-44000	HYUNDAI	59-0H-H54
572337	LAND ROVER	111-0L-L002
575 882	LAND ROVER	111-0L-L007
57716-34000	HYUNDAI	103-0H-H60
57724 07000	KIA	103-0K-K07
57724 07100	KIA	103-0K-K06
57724 2G000	KIA	103-0K-K01
57724 4D000	KIA	103-0K-K02
57724-0X000	HYUNDAI	103-0H-H17
57724-1E000	HYUNDAI	103-0H-H04
57724-1G100	KIA	103-0K-K12
57724-2B000	HYUNDAI	103-0H-H11
57724-2D000	HYUNDAI	103-0H-H06
57724-2E000	HYUNDAI	103-0H-H16
57724-38000	HYUNDAI	103-0H-H12
57724-38010	HYUNDAI	103-0H-H13
57724-3A000	HYUNDAI	103-0H-H15
57724-3K000	HYUNDAI	103-0H-H14
57729-4A000	HYUNDAI	103-0H-H08
57730-24000	HYUNDAI	103-0H-H54
57730-24100	HYUNDAI	103-0H-H58
57730-28000	HYUNDAI	103-0H-H55
57730-28020	HYUNDAI	103-0H-H56
57730-29000	HYUNDAI	111-0H-H94
57730-29000	HYUNDAI	103-0H-H63
57730-29001	HYUNDAI	103-0H-H63
57730-33100	HYUNDAI	103-0H-H56
57730-43010	HYUNDAI	103-0H-H03
57731 3E010	KIA	103-0K-K11
57732 3E010	KIA	103-0K-K10
57755-02000	HYUNDAI	103-0H-H05
57755-17000	HYUNDAI	103-0H-H09
57755-1C000	SUZUKI	103-0H-H07
57755-22000	HYUNDAI	103-0H-H01
57780-38000	HYUNDAI	111-0H-H10
57780-38010	HYUNDAI	111-0H-H09

OE		ASHIKA CODE
57780-3B000	HYUNDAI	111-0H-H15
57785-26200	HYUNDAI	103-0H-H10
6232-20043	SUBARU	53-07-701
6315-10070	SUBARU	111-07-722
7210-60520	SUBARU	71-07-701
7210-60530	SUBARU	71-07-700
7210-67001	SUBARU	73-07-798
7210-67002	SUBARU	73-07-798
7210-67003	SUBARU	73-07-798
7210-67020	SUBARU	73-07-704
7210-67021	SUBARU	73-07-704
7313-10010	SUBARU	103-07-733
7313-10011	SUBARU	103-07-733
7313-10060	SUBARU	103-07-733
7313-10140	SUBARU	103-07-707
7313-20000	SUBARU	111-07-701R
7313-20010	SUBARU	111-07-701L
7313-20020	SUBARU	111-07-705
7701472038	NISSAN	53-01-100
8-64452-106-1	ISUZU	53-09-908R
8-91733-866-0	ISUZU	GOM-903
8-92223-475-1	ISUZU	73-09-909
8-94103-222-2	ISUZU	111-09-905R
8-94103-223-2	ISUZU	111-09-905L
8-94109-041-1	ISUZU	111-09-912
8-94109-041-2	ISUZU	111-09-912
8-94109-041-3	ISUZU	111-09-912
8-94109-704-1	ISUZU	53-09-908R
8-94124-585-1	ISUZU	111-09-906R
8-94124-586-0	ISUZU	111-09-997
8-94124-586-1	ISUZU	111-09-997
8-94200-320-0	ISUZU	73-09-903
8-94200-320-1	ISUZU	73-09-903
8-94200-320-2	ISUZU	73-09-903
8-94217-221-3	ISUZU	103-09-900
8-94223-168-0	ISUZU	GOM-906
8-94223-366-0	ISUZU	GOM-909
8-94224-550-1	ISUZU	73-09-999
8-94224-550-2	ISUZU	73-09-999
8-94224-550-3	ISUZU	73-09-999
8-94224-550-4	ISUZU	73-09-999
8-94224-550-5	ISUZU	73-09-999
8-94224-551-0	ISUZU	53-09-908R
8-94224-551-1	ISUZU	53-09-908R
8-94224-551-2	ISUZU	53-09-908R
8-94224-552-1	ISUZU	53-09-906
8-94224-552-2	ISUZU	53-09-906
8-94225-550-0	ISUZU	73-09-999
8-94226-557-0	ISUZU	GOM-914
8-94226-557-2	ISUZU	GOM-908
8-94226-967-0	ISUZU	73-09-909
8-94226-967-1	ISUZU	73-09-909
8-94226-967-2	ISUZU	73-09-909
8-94233-475-1	ISUZU	111-09-906R
8-94233-476-1	ISUZU	111-09-997

O.E.M. names and numbers are used for reference purposes only Ashika assumes no responsibility for possible errors

OE		ASHIKA CODE
8-94234-319-0	ISUZU	GOM-907
8-94237-351-0	ISUZU	111-09-904
8-94237-351-1	ISUZU	111-09-904
8-94237-366-0	ISUZU	27-09-902
8-94237-366-1	ISUZU	27-09-902
8-94237-367-0	ISUZU	27-09-902
8-94237-367-1	ISUZU	27-09-902
8-94237-800-0	ISUZU	59-09-901
8-94241-767-0	ISUZU	52-09-912
8-94243-234-0	ISUZU	73-09-999
8-94243-236-1	ISUZU	53-09-908R
8-94246-236-0	ISUZU	53-09-908R
8-94246-475-0	ISUZU	53-09-906
8-94246-475-1	ISUZU	53-09-906
8-94250-316-0	ISUZU	73-09-903
8-94255-456-0	ISUZU	73-09-903
8-94366-606-0	ISUZU	103-09-905
8-94369-924-0	ISUZU	111-09-997
8-94369-925-0	ISUZU	111-09-906R
8-94374-424-0	ISUZU	73-09-917
8-94375282-5	ISUZU	GOM-901
8-94375283-2	ISUZU	GOM-902
8-94408-840-3	ISUZU	GOM-910
8-94408-842-0	ISUZU	GOM-915
8-94419-406-1	ISUZU	110-09-905
8-94419-407-1	ISUZU	110-09-905
8-94419-407-2	ISUZU	110-09-905
8-94419-408-0	ISUZU	111-09-999
8-94419-408-1	ISUZU	111-09-999
8-94419-409-0	ISUZU	111-09-998
8-94419-409-1	ISUZU	111-09-998
8-94419-608-2	ISUZU	111-09-905R
8-94419-609-2	ISUZU	111-09-905L
8-94452-102-0	ISUZU	73-09-913
8-94452-102-1	ISUZU	73-09-913
8-94452-104-0	ISUZU	53-09-906
8-94452-104-1	ISUZU	53-09-906
8-94452-106-0	ISUZU	53-09-908R
8-94452-107-0	ISUZU	53-09-908R
8-94452-107-1	ISUZU	53-09-908R
8-94452-110-1	ISUZU	73-09-909
8-94452-110-2	ISUZU	73-09-909
8-94459-453-1	ISUZU	73-09-914
8-94459-453-2	ISUZU	73-09-914
8-94459-453-3	ISUZU	73-09-914
8-94459-456-1	ISUZU	73-09-913
8-94459-464-0	ISUZU	73-09-915
8-94459-464-1	ISUZU	73-09-915
8-94459-464-2	ISUZU	73-09-915
8-94459-464-3	ISUZU	73-09-915
8-94459-465-2	ISUZU	73-09-913
8-94459-475-0	ISUZU	27-09-904
8-94459-478-0	ISUZU	110-09-903
8-94459-478-1	ISUZU	110-09-903
8-94459-480-0	ISUZU	111-09-999

OE		ASHIKA CODE
8-94459-480-1	ISUZU	111-09-999
8-94459-480-2	ISUZU	111-09-999
8-94459-481-0	ISUZU	111-09-998
8-94459-481-1	ISUZU	111-09-998
8-94459-481-2	ISUZU	111-09-998
8-94472-255-0	ISUZU	73-09-999
8-94472-255-2	ISUZU	73-09-999
8-97018227-2	ISUZU	106-09-900
8-97018228-2	ISUZU	106-09-901
8-97020-953-1	ISUZU	111-09-999
8-97020-954-1	ISUZU	111-09-998
8-97020-954-2	ISUZU	111-09-998
8-97025-753-0	ISUZU	GOM-900
8-97028-967-0	ISUZU	59-09-997
8-97039-325-1	ISUZU	59-09-997
8-97104-157-1RH	ISUZU	GOM-904
8-97104-158-1LH	ISUZU	GOM-905
8-972357770	ISUZU	73-09-906
8-973048510	ISUZU	103-09-902
8-973048550	ISUZU	111-09-915
8-973049280	ISUZU	111-09-915
8-973650180	ISUZU	73-09-906
8021-99-322	MAZDA	111-03-312
8021-99-324	MAZDA	111-03-314
8037-32-320	MAZDA	59-03-308
8038-99-322	MAZDA	111-03-316
8038-99-356	MAZDA	73-03-316
8173-32-322	MAZDA	111-03-319
8173-99-322	MAZDA	111-03-319
8173-99-356	MAZDA	53-03-307
8200565079	NISSAN	72-01-133
8200626959	NISSAN	72-01-132
83500 202	JEEP	111-00-J001
8531-32-320	MAZDA	59-03-308
8531-99-322	MAZDA	111-03-312
8531-99-3224	MAZDA	111-03-305
8531-99-322A	MAZDA	111-03-312
8531-99-324	MAZDA	73-03-399
8531-99-356	MAZDA	53-03-307
8559-32-220	MAZDA	52-03-306
8559-99-354	MAZDA	73-03-318
8650-99-356	MAZDA	73-03-316
8AB1-32-280	MAZDA	111-03-325
8AB2-32-280	MAZDA	111-03-334
8AG1 28 100A	MAZDA	106-03-302
8AG1-32-280	MAZDA	111-03-330
8AG3 32 280	MAZDA	111-03-339
8AG4 32 280	MAZDA	111-03-338
8AH1-32-280	MAZDA	111-03-322
8AH3-32-280	MAZDA	111-03-332
8AL1-32-280	MAZDA	111-03-350
8AN1-32-280	MAZDA	111-03-300
8AU1-32-280	MAZDA	111-03-329
8AU1-34-510	MAZDA	53-03-321
8AU1-34-540	MAZDA	111-03-320

OE		ASHIKA CODE
8AU2-32-270	MAZDA	111-03-328
8AU2-34-510	MAZDA	53-03-321
8AU3-34-510	MAZDA	73-03-324
9-43150-038-0	ISUZU	111-09-901R
9-43150-039-0	ISUZU	111-09-901L
9-43150-053-0	ISUZU	111-09-901R
9-43150-054-0	ISUZU	111-09-901L
9-43150-601-0	ISUZU	111-09-901R
9-43150-602-0	ISUZU	111-09-901L
9-43150-605-0	ISUZU	111-09-901R
9-43150-606-0	ISUZU	111-09-901L
9-43150-612-0	ISUZU	111-09-901R
9-43150-613-0	ISUZU	111-09-901L
9-44352-071-0	ISUZU	111-09-902L
9-44352-603-0	ISUZU	111-09-902L
9-44352-630-0	ISUZU	111-09-902L
9-44352-640-0	ISUZU	111-09-902L
9-51151-023-0	ISUZU	GOM-912
9-51227-704-0	ISUZU	53-09-908R
9-51227-704-1	ISUZU	53-09-908R
9-51351-029-0	ISUZU	GOM-913
90043-85046	DAIHATSU	GOM-605
90043-85049	DAIHATSU	GOM-606
90045-40165	DAIHATSU	GOM-609
90112-SE0-000	HONDA	106-04-411
90140006	TOYOTA	111-0W-D51R
90140007	TOYOTA	111-0W-D51L
90342316	TATA (TELCO)	73-00-051
90342316	TOYOTA	73-0W-D51
90375505	TATA (TELCO)	73-00-051
90375505	TOYOTA	73-0W-D51
90375506	TOYOTA	73-0W-D51
90375506	TATA (TELCO)	73-00-051
90385-18007	TOYOTA	GOM-213
90385-18009	TOYOTA	GOM-205
90385-18009	TOYOTA	GOM-222
90385-18046	TOYOTA	GOM-212
90385-23037	TOYOTA	GOM-221
90389-18002	TOYOTA	GOM-206
90948-01002	TOYOTA	GOM-216
91255-04600	MITSUBISHI	111-05-532
93740701	CHEVROLET	103-0C-C02
93740710	CHEVROLET	111-0C-C02
93740722	CHEVROLET	111-0C-C03
93740723	CHEVROLET	111-0C-C04
93741074	CHEVROLET	103-0W-D54
93741092	DAEWOO	111-0W-D99
94020795	ISUZU	53-09-908R
94021476	ISUZU	111-09-902R
94021477	ISUZU	111-09-902L
94021716	ISUZU	73-09-901
94025674	ISUZU	111-09-902R
94025675	ISUZU	111-09-902L
94025980	ISUZU	111-09-902R
94025981	ISUZU	111-09-902L

OE		ASHIKA CODE
94025984	ISUZU	73-09-901
94027778	ISUZU	103-09-999
94028101	ISUZU	53-09-908R
94028225	ISUZU	111-09-904
94109704	ISUZU	53-09-908L
94200320	ISUZU	73-09-903
94200328	ISUZU	73-09-903
94217221	ISUZU	111-09-904
94224550	ISUZU	73-09-999
94224551	ISUZU	53-09-908R
94224552	ISUZU	53-09-906
94224701	ISUZU	111-09-904
94233475	ISUZU	111-09-906R
94237351	ISUZU	111-09-904
94243234	ISUZU	73-09-999
94243236	ISUZU	53-09-908R
94246475	ISUZU	53-09-906
9445104	ISUZU	53-09-906
94452102	ISUZU	73-09-913
94452106	ISUZU	53-09-908R
94452110	ISUZU	53-09-909
94459453	ISUZU	73-09-914
94459464	ISUZU	73-09-915
94459465	ISUZU	73-09-913
94459480	ISUZU	111-09-999
94459481	ISUZU	111-09-998
94786917	DAEWOO	73-0W-D51
94786917	TATA (TELCO)	73-00-051
94788122	SUZUKI	73-0W-D51
94788122	TATA (TELCO)	73-00-051
94FB 33 95A2B	MAZDA	73-03-300
9612-9753	DAEWOO	111-0W-D60
96205809	DAEWOO	111-0W-D60
96207628	DAEWOO	106-0D-D02
96213117	DAEWOO	72-0D-D06
96213118	DAEWOO	72-0D-D05
96213119	DAEWOO	73-0W-D55
96225858	CHEVROLET	106-0C-C05
96225859	CHEVROLET	106-0C-C04
96261107	CHEVROLET	GOM-C09
96261108	CHEVROLET	73-0C-C04
96261378	CHEVROLET	111-0C-C08
96261379	CHEVROLET	111-0C-C07
96268439	DAEWOO	72-0D-D02
96268440	DAEWOO	72-0D-D01
96268454	DAEWOO	72-0D-D04
96268455	DAEWOO	72-0D-D03
96275018	DAEWOO	111-0W-D51L
96275019	DAEWOO	111-0W-D51R
9630-0048	DAEWOO	73-0W-D54
96300222	DAEWOO	106-0D-D04
96300627	DAEWOO	106-0D-D03
96316765	DAEWOO	71-08-803
96378346	CHEVROLET	GOM-C08
96378347	CHEVROLET	72-0C-C08

O.E.M. names and numbers are used for reference purposes only Ashika assumes no responsibility for possible errors

OE		ASHIKA CODE
96378348	CHEVROLET	72-0C-C07
96380613	CHEVROLET	GOM-C07
96391850	CHEVROLET	72-0C-C06
96391851	CHEVROLET	72-0C-C05
96391875	CHEVROLET	106-0C-C06
96391876	CHEVROLET	106-0C-C09
96403099	CHEVROLET	106-0C-C07
96403100	CHEVROLET	106-0C-C08
96407485	CHEVROLET	111-0C-C06
96407486	CHEVROLET	111-0C-C05
96490218	CHEVROLET	73-0C-C03
96535081	CHEVROLET	72-0C-C03
96535082	CHEVROLET	72-0C-C04
96535089	CHEVROLET	73-0C-C02
96626150	CHEVROLET	106-0C-C03
96626667	CHEVROLET	111-0C-C01
96810751	CHEVROLET	GOM-C01
96819161	CHEVROLET	72-0C-C01
96819162	CHEVROLET	72-0C-C02
97028967	ISUZU	59-09-997
AA92A-59-032	ASIA MOTORS	73-0A-A02
ANR 1799	LAND ROVER	111-0L-L002
ANR 3304	LAND ROVER	106-0L-L07
AW311699	MITSUBISHI	73-05-512
AW330961	MITSUBISHI	73-05-519
B001-32-135	MAZDA	103-03-301
B001-34-470	MAZDA	GOM-303
B001-34-550	MAZDA	53-03-322
B001-99-324	MAZDA	111-03-318R
B001-99-325	MAZDA	111-03-318R
B01A 34 300	MAZDA	72-03-307
B01A 34 350	MAZDA	72-03-306
B01A-34-550	MAZDA	73-03-327
B01A-34-550A	MAZDA	73-03-327
B029-34159	MAZDA	106-03-301
B037-32-280	MAZDA	111-03-311
B038-32-135	MAZDA	103-03-305
B067-99-324	MAZDA	111-03-318L
B092-32-240	MAZDA	103-03-310
B092-34-550	MAZDA	53-03-322
B093-32-240	MAZDA	103-03-309R
B093-32-250	MAZDA	103-03-309L
B094-32-240	MAZDA	103-03-310
B210-32-240	MAZDA	103-03-310
B211-32-240	MAZDA	103-03-313R
B21H 32 24X	MAZDA	103-03-319
B25D 32 240	MAZDA	103-03-320
B25D 32 250	MAZDA	103-03-321
B25D 34 300A	MAZDA	72-03-309
B25D 34 350A	MAZDA	72-03-308
B25D 34 460	MAZDA	GOM-306
B25D 34 470	MAZDA	GOM-305
B26 R 28 170	MAZDA	106-03-309
B26 R 34 170	MAZDA	106-03-306
B30H 28 170B	MAZDA	106-03-308

OE		ASHIKA CODE
B32H 34 300	MAZDA	72-03-317
B32H 34 350	MAZDA	72-03-316
B455-32-24X	MAZDA	76-03-397
B455-32-280	MAZDA	111-03-334
B455-34-300 E	MAZDA	72-03-305
B455-34-350 E	MAZDA	72-03-304
B455-34-550	MAZDA	53-03-326
B456-32-24X	MAZDA	76-03-395
B456-32-25X	MAZDA	76-03-398
B459-34-470	MAZDA	GOM-302
BA29-32-135	MAZDA	103-03-305
BC1D 28 170A	MAZDA	106-03-305
BC1D 34 470	MAZDA	GOM-304
BF62-32-240	MAZDA	103-03-310
BF667-32-240	MAZDA	103-03-310
BP4K 28 500C	MAZDA	71-03-303
BP4K 28C 10B	MAZDA	71-03-302
BP4K 34 170C	MAZDA	106-03-313
BP4L 32 240	MAZDA	103-03-328
BP4L 32 280	MAZDA	111-03-347
BP4L 32 290	MAZDA	111-03-346
C100-34-300A	MAZDA	72-03-327
C100-34-350A	MAZDA	72-03-326
D061-32-24XA	MAZDA	103-03-300
D102-32-240	MAZDA	103-03-326
D102-32-250	MAZDA	103-03-325
D201-34-300E	MAZDA	71-03-301
D201-34-350A	MAZDA	71-03-300
D27Z-3A131A	MAZDA	111-03-302
D77Z-3A131A	MAZDA	111-03-302
DD32 34 300	MAZDA	72-03-315
DD32 34 350	MAZDA	72-03-314
E016 32 24X	MAZDA	103-03-318
E016 32 250	MAZDA	103-03-317
E17Z-3049A	MAZDA	73-03-311
E17Z-3050A	MAZDA	73-03-312
E17Z-3590A	MAZDA	52-03-304
EA01-28-170	MAZDA	106-03-317
EA03-34-170A	MAZDA	106-03-311
F1CZ-32-80A	MAZDA	76-03-397
F4BZ-3280A	KIA	103-0K-K54
FMBZ-3A130-A	KIA	111-0K-K62
FO2Z-3A130A	MAZDA	111-03-332
FTC 3570	LAND ROVER	73-0L-L01
FTC 3571	LAND ROVER	73-0L-L02
G030-32-240	MAZDA	103-03-302L
G030-32-240A	MAZDA	103-03-302L
G030-32-250	MAZDA	103-03-399
G030-32-250A	MAZDA	103-03-399
G030-34-300F	MAZDA	26-03-399
G030-34-350F	MAZDA	26-03-398
G030-99-356	MAZDA	73-03-317
G037-32-240	MAZDA	103-03-306R
G037-32-240A	MAZDA	103-03-306R
G037-32-240B	MAZDA	103-03-306R

OE		ASHIKA CODE
G037-32-240C	MAZDA	103-03-306R
G037-32-250	MAZDA	103-03-306L
G037-32-250A	MAZDA	103-03-306L
G037-32-250B	MAZDA	103-03-306L
G037-32-250C	MAZDA	103-03-306L
G351-32-280	MAZDA	111-03-332
GA2A 34 150A	MAZDA	106-03-303
GA2A 34 170A	MAZDA	106-03-304
GA2A 34 46XA	MAZDA	GOM-309
GA2A 34 46YA	MAZDA	GOM-308
GA2A 34 470	MAZDA	GOM-307
GA2A-32-250	MAZDA	103-03-322
GA2A-34-300	MAZDA	72-03-311
GA2A-34-350	MAZDA	72-03-310
GA2C-28-170A	KIA	106-0K-K51
GA2C-28-170B	MAZDA	106-0K-K51
GA6A-34-300B	MAZDA	71-03-304
GA6A-99-356	MAZDA	73-03-317
GA6B-99-356	MAZDA	73-03-317
GA6B-99-356A	MAZDA	73-03-317
GE4T 28 170	MAZDA	106-03-310
GE4T 34 46XD	MAZDA	GOM-311
GE4T 34 46YD	MAZDA	GOM-310
GE4T-32-240	MAZDA	103-03-324
GE4T-34-300E	MAZDA	72-03-313
GE4T-34-350E	MAZDA	72-03-312
GJ21-32-240	MAZDA	103-03-302R
GJ22-32-240	MAZDA	103-03-302R
GJ6A-28-170A	MAZDA	106-03-316
GJ6A-34-150A	MAZDA	106-03-315
GJ6A-34-170A	MAZDA	106-03-314
GJ6A-34-200B	MAZDA	72-03-319
GJ6A-34-250B	MAZDA	72-03-318
GJ6A-34-460A	MAZDA	GOM-320
GJ6A-34-470A	MAZDA	GOM-318
GJ6A-34-540	MAZDA	73-03-307
GJ6A-34-710A	MAZDA	GOM-319
GJ6A-34-J00B	MAZDA	71-03-305
GJ6A-34-J50B	MAZDA	71-03-306
GJ6E-32-240	MAZDA	103-03-329
GJ6E-32-280	MAZDA	111-03-349
GJ6E-32-290	MAZDA	111-03-348
GSJ 1011	HONDA	111-04-487
GSJ 1085	HONDA	111-04-488
GSJ 1086	HONDA	111-04-489
GSJ 227	HONDA	26-04-495
GSJ 228	HONDA	111-04-481
GSJ 278	ROVER	73-04-499
GSJ 404	HONDA	73-04-406
GSJ 407	ROVER	111-04-404L
GSJ 408	ROVER	111-04-404R
GSJ 423	ROVER	73-04-495
GSJ 424	HONDA	73-04-496
GSJ 495	HONDA	111-04-406L
GSJ 496	HONDA	111-04-406R

OE		ASHIKA CODE
GSJ 499	HONDA	73-04-416
GSV 1211	HONDA	103-04-410
H001-32-240	MAZDA	103-03-303
H001-32-240A	MAZDA	103-03-303
H001-32-240X	MAZDA	105-03-303
H001-32-324X	MAZDA	105-03-303
H001-99-324	MAZDA	111-03-309
H001-99-356	MAZDA	73-03-319
H002-32-240	MAZDA	103-03-307
H002-32-240B	MAZDA	103-03-307
H002-32-240C	MAZDA	103-03-307
H260-32-240A	MAZDA	103-03-314L
H261-32-240A	MAZDA	103-03-314R
H2Y0-99-356	MAZDA	73-03-319
HA14-32-240AX	MAZDA	105-03-302
HB212-100	HYUNDAI	53-0H-H63
HB212003	HYUNDAI	72-0H-H18
HB212004	HYUNDAI	72-0H-H17
K9018-2694	DAEWOO	71-0W-D02L
K9018-2695	DAEWOO	71-0W-D02R
KB092-32-280	KIA	111-0K-K61
KBJ-R45	DAEWOO	111-0W-D99
KBJ029	DAEWOO	111-0D-D56
KDX50 32240B	KIA	103-0K-K50
KDX53-32-240	KIA	103-0K-K54
KDX53-32-240A	KIA	103-0K-K54
KG2C-28-170A	KIA	106-0K-K51
KGA2A-34-150	KIA	106-0K-K52R
KGA2A-34-150A	KIA	106-0K-K52R
KGA2A-34-170	KIA	106-0K-K52L
KGA2A-34-170A	KIA	106-0K-K52L
KH380-28-170B	KIA	106-0K-K57
KH380-34-170C	KIA	106-0K-K56
KJ01-32-631B	ASIA MOTORS	111-0A-A51
KJ01-32-960	ASIA MOTORS	111-0A-A03
KK150-32-240	KIA	103-0K-K53
KKY01-32-280	KIA	111-0K-K61
KKY01-34-310	KIA	73-0K-K52
KKY01-34-390A	KIA	73-0K-K52
KR21-32-960	ASIA MOTORS	111-0A-A44
LA01-32-115	MAZDA	103-03-323
LB82-34-300	MAZDA	71-03-307
LC62-32-240B	MAZDA	103-03-330
LC62-32-280	MAZDA	73-03-308
LC62-34-170A	MAZDA	106-03-307
LC62-34-300C	MAZDA	72-03-321
LC62-34-350C	MAZDA	72-03-320
LC62-34-550	MAZDA	73-03-321
M001-99-356	MAZDA	73-03-317
M001-99-356A	MAZDA	73-03-317
MA150801	MITSUBISHI	111-05-596
MA159982	MITSUBISHI	111-05-502
MA159984	MITSUBISHI	111-05-501
MA169605	MITSUBISHI	27-05-501
MA169613	MITSUBISHI	111-05-502

O.E.M. names and numbers are used for reference purposes only Ashika assumes no responsibility for possible errors

OE		ASHIKA CODE
MA169614	MITSUBISHI	111-05-501
MB001696	MITSUBISHI	53-05-505
MB001699	MITSUBISHI	53-05-505
MB001715	MITSUBISHI	53-05-505
MB002433	MITSUBISHI	73-05-599
MB002475	MITSUBISHI	73-05-503
MB002476	MITSUBISHI	73-05-503
MB002583-01	MITSUBISHI	73-05-516
MB002584-01	MITSUBISHI	73-05-516
MB005820	MITSUBISHI	59-05-503
MB006314	MITSUBISHI	111-05-503R
MB006315	MITSUBISHI	111-05-503L
MB006358	MITSUBISHI	111-05-503R
MB006359	MITSUBISHI	111-05-503L
MB006570	MITSUBISHI	59-05-521
MB006571	MITSUBISHI	59-05-502
MB006572	MITSUBISHI	59-05-502
MB007023	MITSUBISHI	GOM-501
MB076001	MITSUBISHI	105-05-502L
MB076002	MITSUBISHI	105-05-502R
MB076003	MITSUBISHI	111-05-505
MB076004	MITSUBISHI	111-05-504
MB076009	MITSUBISHI	52-05-503
MB076010	MITSUBISHI	52-05-502
MB076531	MITSUBISHI	111-05-503R
MB076532	MITSUBISHI	111-05-503L
MB076663	MITSUBISHI	111-05-505
MB076664	MITSUBISHI	111-05-504
MB092-32-280	KIA	111-0K-K61
MB109168	MITSUBISHI	53-05-506L
MB109168	MITSUBISHI	53-0H-H52L
MB109169	MITSUBISHI	53-0H-H52R
MB109169	MITSUBISHI	53-05-506R
MB109219	MITSUBISHI	GOM-521
MB109512	MITSUBISHI	71-05-508
MB109513	MITSUBISHI	71-05-509
MB109529	MITSUBISHI	GOM-516
MB109539	MITSUBISHI	113-05-502
MB109539-01	MITSUBISHI	58-05-503
MB109557	MITSUBISHI	GOM-517
MB109585	MITSUBISHI	73-05-503
MB109586	MITSUBISHI	113-05-502
MB109587	MITSUBISHI	53-05-504
MB109588	MITSUBISHI	53-05-504
MB109630A	HYUNDAI	72-0H-H16
MB109631A	HYUNDAI	72-0H-H15
MB109662	MITSUBISHI	GOM-505
MB109684	MITSUBISHI	GOM-506
MB109858	MITSUBISHI	111-05-508
MB111070	MITSUBISHI	GOM-512
MB111071	MITSUBISHI	GOM-511
MB111203	MITSUBISHI	GOM-510
MB112476	MITSUBISHI	73-05-503
MB112477	MITSUBISHI	73-05-503
MB122000	MITSUBISHI	59-05-504

OE		ASHIKA CODE
MB122011	MITSUBISHI	111-05-506
MB122012	MITSUBISHI	111-05-506
MB122135	MITSUBISHI	103-05-501
MB122396	MITSUBISHI	52-05-504
MB122400	MITSUBISHI	59-05-506
MB122774	MITSUBISHI	59-05-503
MB122779	MITSUBISHI	111-05-505
MB122781	MITSUBISHI	111-05-501
MB122782	MITSUBISHI	111-05-501
MB130807	MITSUBISHI	103-05-599
MB142181	MITSUBISHI	111-05-503R
MB150095	MITSUBISHI	GOM-525
MB154199	MITSUBISHI	GOM-500
MB166281	MITSUBISHI	52-05-509
MB166284	MITSUBISHI	59-05-505
MB166420	MITSUBISHI	24-05-504
MB166422	MITSUBISHI	24-05-599
MB166423	MITSUBISHI	52-05-523
MB166424	MITSUBISHI	52-05-599
MB166425	MITSUBISHI	52-05-521
MB166426	MITSUBISHI	111-05-503R
MB166427	MITSUBISHI	111-05-503L
MB166428	MITSUBISHI	59-05-507
MB166429	MITSUBISHI	59-05-511
MB166566	MITSUBISHI	52-05-503
MB166592	MITSUBISHI	111-05-508
MB166765	MITSUBISHI	111-05-509
MB166766	MITSUBISHI	111-05-510
MB166980	MITSUBISHI	111-05-505
MB166981	MITSUBISHI	111-05-508
MB166982	MITSUBISHI	111-05-501
MB175544	MITSUBISHI	53-05-504
MB175581	MITSUBISHI	GOM-520
MB175804	MITSUBISHI	GOM-507
MB175812	MITSUBISHI	53-05-509
MB176273	MITSUBISHI	53-05-509
MB176283	MITSUBISHI	53-05-509
MB176308	MITSUBISHI	53-05-507
MB176309	MITSUBISHI	73-05-508
MB176442	MITSUBISHI	GOM-519
MB185329	MITSUBISHI	53-05-510
MB185441	MITSUBISHI	111-05-503R
MB192297	MITSUBISHI	59-05-503
MB192430	MITSUBISHI	111-05-516
MB192499	MITSUBISHI	111-05-516
MB241155	MITSUBISHI	73-05-508
MB241156	MITSUBISHI	73-05-508
MB241165	MITSUBISHI	52-05-502
MB241166	MITSUBISHI	52-05-509
MB241168	MITSUBISHI	52-05-508
MB241171	MITSUBISHI	111-05-509
MB241172	MITSUBISHI	111-05-503R
MB241196	MITSUBISHI	59-05-521
MB241197	MITSUBISHI	59-05-502
MB241198	MITSUBISHI	59-05-502

OE		ASHIKA CODE
MB241199	MITSUBISHI	59-05-502
MB241206	MITSUBISHI	111-05-510
MB241207	MITSUBISHI	111-05-503L
MB241420	MITSUBISHI	59-05-504
MB241421	MITSUBISHI	59-05-505
MB241422	MITSUBISHI	59-05-505
MB241423	MITSUBISHI	59-05-510
MB241425	MITSUBISHI	59-05-509
MB241446	MITSUBISHI	52-05-503
MB241448	MITSUBISHI	52-05-504
MB241449	MITSUBISHI	52-05-501
MB241495	MITSUBISHI	59-05-503
MB241496	MITSUBISHI	59-05-521
MB241498	MITSUBISHI	59-05-502
MB241499	MITSUBISHI	59-05-506
MB241500	MITSUBISHI	59-05-506
MB241508	MITSUBISHI	59-05-506
MB241818	MITSUBISHI	53-05-509
MB241830	MITSUBISHI	59-05-508
MB241883	MITSUBISHI	73-05-512
MB241884	MITSUBISHI	52-05-511
MB241973	MITSUBISHI	52-05-510
MB241974	MITSUBISHI	106-05-522
MB241982	MITSUBISHI	111-05-511
MB243329	MITSUBISHI	103-05-506
MB243373	MITSUBISHI	103-05-503
MB243425A	HYUNDAI	110-0H-H52
MB243426A	HYUNDAI	110-0H-H53
MB244901	MITSUBISHI	103-05-500
MB260676	MITSUBISHI	GOM-503
MB266152	MITSUBISHI	103-05-505
MB267685	MITSUBISHI	GOM-522
MB275632	MITSUBISHI	GOM-524
MB288119	MITSUBISHI	111-05-522
MB303374	MITSUBISHI	73-05-512
MB303375	MITSUBISHI	73-05-512
MB315160	MITSUBISHI	103-05-505
MB315586	MITSUBISHI	103-05-503
MB315629	MITSUBISHI	111-05-503R
MB315769	MITSUBISHI	59-05-512
MB315770	MITSUBISHI	59-05-513
MB315775	MITSUBISHI	111-05-509
MB315776	MITSUBISHI	111-05-510
MB347666	MITSUBISHI	103-05-502
MB349475	MITSUBISHI	73-05-508
MB349575	MITSUBISHI	73-05-508
MB349963	MITSUBISHI	73-05-512
MB349964	MITSUBISHI	73-05-512
MB350577	MITSUBISHI	103-05-505
MB350718	MITSUBISHI	103-05-504
MB378701	MITSUBISHI	111-05-505
MB378702	MITSUBISHI	111-05-504
MB378703	MITSUBISHI	111-05-508
MB378704	MITSUBISHI	111-05-501
MB430350	MITSUBISHI	73-05-512

OE		ASHIKA CODE
MB430351	MITSUBISHI	73-05-512
MB436444	MITSUBISHI	GOM-502
MB489434	MITSUBISHI	111-05-516
MB489606	MITSUBISHI	103-05-502
MB501530	MITSUBISHI	103-05-504
MB518041	MITSUBISHI	73-05-512
MB518042	MITSUBISHI	73-05-512
MB518205	MITSUBISHI	73-05-512
MB518206	MITSUBISHI	73-05-512
MB518283	MITSUBISHI	73-05-520
MB518712	MITSUBISHI	73-05-512
MB518713	MITSUBISHI	73-05-512
MB518780	MITSUBISHI	106-05-504
MB518892	MITSUBISHI	106-05-501
MB518960	MITSUBISHI	73-05-512
MB518961	MITSUBISHI	73-05-512
MB527157-01	MITSUBISHI	73-05-520
MB527159	MITSUBISHI	72-05-512
MB527161-01	MITSUBISHI	73-05-520
MB527169	MITSUBISHI	111-05-514
MB527228	MITSUBISHI	59-05-514
MB527349	MITSUBISHI	73-05-513
MB527350	MITSUBISHI	73-05-513
MB527351	MITSUBISHI	73-05-515L
MB527352	MITSUBISHI	73-05-515R
MB527383-01	MITSUBISHI	73-05-514
MB527384-01	MITSUBISHI	73-05-514
MB527511-01	MITSUBISHI	73-05-520
MB527512-01	MITSUBISHI	73-05-520
MB527650	MITSUBISHI	111-05-515
MB532046	MITSUBISHI	103-05-502
MB532281	MITSUBISHI	103-05-509
MB532971	MITSUBISHI	103-05-510
MB553249	MITSUBISHI	103-05-508
MB564991	MITSUBISHI	111-05-516
MB573783	MITSUBISHI	GOM-523
MB573784	MITSUBISHI	GOM-508
MB573885	MITSUBISHI	111-05-516
MB581845	MITSUBISHI	GOM-504
MB584146	MITSUBISHI	GOM-518
MB597605	MITSUBISHI	111-05-514
MB598017	MITSUBISHI	111-0H-H005
MB598018	MITSUBISHI	111-0H-H004
MB598023	MITSUBISHI	111-05-514
MB598097	MITSUBISHI	GOM-509
MB616286	MITSUBISHI	111-05-516
MB631492	MITSUBISHI	GOM-514
MB633926	MITSUBISHI	106-05-515
MB672370	MITSUBISHI	106-05-520
MB673525A	HYUNDAI	111-0H-H96
MB673525B	HYUNDAI	59-0H-H53
MB808076	MITSUBISHI	106-05-521
MB808909	MITSUBISHI	GOM-528
MB808910	MITSUBISHI	GOM-529
MB809220	MITSUBISHI	71-05-502

O.E.M. names and numbers are used for reference purposes only Ashika assumes no responsibility for possible errors

OE		ASHIKA CODE
MB809221	MITSUBISHI	71-05-503
MB809354	MITSUBISHI	106-05-599
MB809355	MITSUBISHI	106-05-502
MB809388	MITSUBISHI	GOM-513
MB809455	MITSUBISHI	106-05-502
MB831037	MITSUBISHI	73-05-523L
MB831038	MITSUBISHI	73-05-523R
MB831040	MITSUBISHI	52-05-512
MB831042	MITSUBISHI	59-05-515
MB831043	MITSUBISHI	111-05-599
MB831044	MITSUBISHI	111-05-598
MB860381	MITSUBISHI	72-05-522
MB860382	MITSUBISHI	72-05-523
MB860408	MITSUBISHI	72-05-513
MB860829	MITSUBISHI	73-05-522
MB860830	MITSUBISHI	73-05-522
MB864164	MITSUBISHI	111-05-515
MB892981	MITSUBISHI	106-05-507
MB910934	MITSUBISHI	103-05-599
MB910961	MITSUBISHI	103-05-599
MB912076	MITSUBISHI	111-05-514
MB912077	MITSUBISHI	72-05-504
MB912078	MITSUBISHI	72-05-505
MB912505	MITSUBISHI	72-05-510
MB912506	MITSUBISHI	72-05-511
MB912509	MITSUBISHI	71-05-506
MB912510	MITSUBISHI	71-05-507
MB912519	MITSUBISHI	111-05-516
MB949343	MITSUBISHI	103-05-513
MDX50-32-280	KIA	111-0K-K62
MN100250	MITSUBISHI	GOM-541
MN101368	MITSUBISHI	106-05-523
MN125871	MITSUBISHI	GOM-548
MN184133	MITSUBISHI	GOM-549
MN184194	MITSUBISHI	106-05-525
MN186217	MITSUBISHI	72-05-508
MN186218	MITSUBISHI	72-05-509
MR130479	MITSUBISHI	71-05-500
MR130480	MITSUBISHI	71-05-501
MR130807	MITSUBISHI	103-05-599
MR131732	MITSUBISHI	106-05-508
MR131830	MITSUBISHI	103-05-514
MR132551	MITSUBISHI	106-05-514
MR132552	MITSUBISHI	106-05-513
MR150094	MITSUBISHI	GOM-527
MR150095	MITSUBISHI	GOM-526
MR179479	MITSUBISHI	72-05-500
MR179480	MITSUBISHI	72-05-501
MR234247	MITSUBISHI	GOM-537
MR241023	MITSUBISHI	72-05-514
MR241024	MITSUBISHI	72-05-515
MR241025	MITSUBISHI	71-05-510
MR241026	MITSUBISHI	71-05-511
MR241027	MITSUBISHI	73-05-505
MR241031	MITSUBISHI	111-05-517

OE		ASHIKA CODE
MR241032	MITSUBISHI	111-05-512
MR244116	MITSUBISHI	GOM-533
MR272116	MITSUBISHI	106-05-500
MR272117	MITSUBISHI	106-05-503
MR272118	MITSUBISHI	106-05-505
MR296272	MITSUBISHI	59-05-500
MR296274	MITSUBISHI	111-05-518
MR296292	MITSUBISHI	71-05-505
MR296293	MAZDA	71-05-504
MR297969	MITSUBISHI	103-05-599
MR319067	MITSUBISHI	GOM-545
MR374521	MITSUBISHI	106-05-516
MR374522	MITSUBISHI	106-05-517
MR403027	MITSUBISHI	103-05-507
MR403419	MITSUBISHI	72-05-520
MR403420	MITSUBISHI	72-05-521
MR403441	MITSUBISHI	GOM-540
MR403485	MITSUBISHI	71-05-512
MR403771	MITSUBISHI	106-05-512
MR414939	MITSUBISHI	71-05-514
MR414940	MITSUBISHI	71-05-513
MR418052	MITSUBISHI	106-05-518
MR418053	MITSUBISHI	106-05-519
MR439701	MITSUBISHI	72-05-506
MR439702	MITSUBISHI	72-05-507
MR448255	MITSUBISHI	103-05-518
MR485672	MITSUBISHI	111-05-514
MR491358	MITSUBISHI	103-05-516
MR496795	MITSUBISHI	72-05-526
MR496796	MITSUBISHI	72-05-527
MR496799	MITSUBISHI	73-05-510
MR508130	MITSUBISHI	73-05-521
MR508135	MITSUBISHI	111-05-524
MR508136	MITSUBISHI	111-05-523
MR510267	MITSUBISHI	103-05-517
MR911569	MITSUBISHI	72-05-503
MR911570	MITSUBISHI	72-05-502
MR954887	MITSUBISHI	106-05-511
MR977606	MITSUBISHI	111-05-500
MR992191	MITSUBISHI	106-05-526
MR992309	MITSUBISHI	106-05-510
MR992310	MITSUBISHI	106-05-509
MR992317	MITSUBISHI	GOM-538
MT141175	MITSUBISHI	73-05-599
MT141176	MITSUBISHI	73-05-599
MT141196	MITSUBISHI	73-05-501
MT141247	MITSUBISHI	58-05-501
MT142181	MITSUBISHI	111-05-503R
MT142182	MITSUBISHI	111-05-503L
MT241449	MITSUBISHI	52-05-501
MT401862	MITSUBISHI	59-05-502
MT402860	MITSUBISHI	59-05-521
MT402861	MITSUBISHI	59-05-502
MT402862	MITSUBISHI	59-05-502
MT402870	MITSUBISHI	52-05-501

OE		ASHIKA CODE
MT402871	MITSUBISHI	52-05-501
MW033300	MITSUBISHI	111-05-507L
MW033301	MITSUBISHI	111-05-507R
N066-34-310	MAZDA	72-03-325
N066-34-360	MAZDA	72-03-324
N068-34-200	MAZDA	72-03-323
N068-34-250	MAZDA	72-03-322
NA01-32-240	MAZDA	103-03-331
NA01-34-170	MAZDA	106-03-318
NA01-34-550	MAZDA	73-03-320
NC10-32-240A	MAZDA	103-03-333
NC10-32-250A	MAZDA	103-03-332
NC10-34-150	MAZDA	106-03-319
NC10-34-170	MAZDA	106-03-320
NRC 1823	LAND ROVER	111-0L-L009
NRC 4745	LAND ROVER	111-0L-L004
NRC 6007	LAND ROVER	111-0L-L003
NRC 9743	LAND ROVER	27-0L-L00
NTC 1888	LAND ROVER	106-0L-L01
OK552-32-250	KIA	111-0K-K96
OK552-32-270	KIA	111-0K-K95
PW530031	MITSUBISHI	103-05-512
QFK 500010	LAND ROVER	103-0L-L01
QFK 500020	LAND ROVER	103-0L-L02
QFK 500030	LAND ROVER	103-0L-L04
QFS000010	LAND ROVER	111-0L-L010
QHG000050	LAND ROVER	27-0L-L01
QJB 100220	LAND ROVER	111-0L-L013
QJB 100230	LAND ROVER	111-0L-L012
QJB 500010	LAND ROVER	111-0L-L011
QJB 500040	LAND ROVER	111-0L-L016
RBJ 000120	LAND ROVER	71-0L-L03
RBJ 000130	LAND ROVER	71-0L-L02
RBJ 102440	LAND ROVER	72-0L-L01
RBJ 102450	LAND ROVER	72-0L-L02
RBJ 500446	LAND ROVER	72-0L-L03
RBJ 500456	LAND ROVER	72-0L-L04
RBJ 500710	LAND ROVER	71-0L-L01
RBK 000042	LAND ROVER	GOM-L06
RBK 500012	LAND ROVER	GOM-L13
RBK 500030	LAND ROVER	73-0L-L03
RBK 500040	LAND ROVER	73-0L-L04
RBK 500150	LAND ROVER	73-0L-L06
RBK 500170	LAND ROVER	73-0L-L07
RBM 000011	LAND ROVER	106-0L-L09
RBM 100170	LAND ROVER	106-0L-L06
RBM 100223	LAND ROVER	106-0L-L02
RBM 500140	LAND ROVER	106-0L-L11
RBM 500150	LAND ROVER	106-0L-L10
RBM 500190	LAND ROVER	106-0L-L04
RBX 000070	LAND ROVER	GOM-L03

OE		ASHIKA CODE
RBX 000200	LAND ROVER	GOM-L04
RBX 101160	LAND ROVER	GOM-L01
RBX 101780	LAND ROVER	GOM-L02
RBX 500280	LAND ROVER	GOM-L07
RBX 500432	LAND ROVER	GOM-L10
RBX 500443	LAND ROVER	GOM-L09
RBX 500531	LAND ROVER	GOM-L11
RDG 100682	LAND ROVER	106-0L-L03
RGD 000180	LAND ROVER	106-0L-L08
RGD 000311	LAND ROVER	106-0L-L05
RGD 500083	LAND ROVER	103-0L-L00
RGX 500070	LAND ROVER	GOM-L08
RHF 000260	LAND ROVER	GOM-L05
RHF 500031	LAND ROVER	GOM-L12
RTC 5869	LAND ROVER	111-0L-L005
RTC 5870	LAND ROVER	111-0L-L006
S083 34 830A	MAZDA	GOM-313
S083 34 840A	MAZDA	GOM-312
S083-32-115	MAZDA	103-03-304
S083-34-460	MAZDA	GOM-314
S083-99-324	MAZDA	111-03-343
S083-99-354	MAZDA	73-03-313
S083-99-356	MAZDA	73-03-314
SA39-32-115	MAZDA	103-03-304
SB000036	HYUNDAI	111-0H-H70
SB000037	HYUNDAI	111-0H-H69
STC 1871	LAND ROVER	111-0L-L014
TIQ 000030	LAND ROVER	111-0L-L015
TIQ 000040	LAND ROVER	103-0L-L03
TIQ000010	LAND ROVER	27-0L-L02
UA01-32-220	MAZDA	52-03-303
UA01-32-240	MAZDA	111-03-321
UA01-99-354	MAZDA	73-03-311
UA01-99-356	MAZDA	73-03-312
UA04-32-220	MAZDA	52-03-304
UB39-32-220B	MAZDA	52-03-314
UB39-32-320	MAZDA	59-03-310
UB39-32-320A	MAZDA	59-03-310
UB39-32-320B	MAZDA	59-03-313
UB39-99-322	MAZDA	111-03-327
UB39-99-324	MITSUBISHI	111-05-597
UB39-99-356	MAZDA	53-03-321
UC86-34-510A	MAZDA	73-03-324
UE-38-32-320	MAZDA	59-03-313
UE39-32-320B	MAZDA	59-03-313
UH71-32-280	MAZDA	111-03-341
UH74-32-250	MAZDA	111-03-340
UH74-32-280	MAZDA	111-03-342
W023-99-323	MAZDA	111-03-310L
Z1G1-32-310	ASIA MOTORS	111-0A-A52
ZB212100	HYUNDAI	53-0H-H63

O.E.M. names and numbers are used for reference purposes only Ashika assumes no responsibility for possible errors

CODE/CODICE ASHIKA	Shaft diameter *Diametro dell'asse*	Cut dimensions (mm) *Dimensioni del taglio (mm)*			
		number~C *numero~C*	C ~ B	B ~ A	no cut *non tagliato*
63-0A-A10	Ø 10	46	66	84	98
63-0A-A12	Ø 12				
63-0A-A16	Ø 16				
63-0A-A18	Ø 18				
63-0A-A20	Ø 20				
63-0A-A22	Ø 22				

number/*numero~C* L=46mm	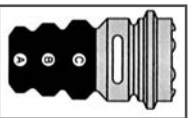
C ~ B L=66mm	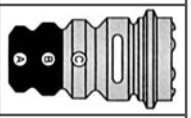
B ~ A L=84mm	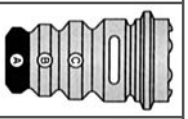
no cut/*non tagliato* L=98mm	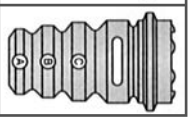

! : All the attached dust boots become common with 63- (COD ASHIKA)
! : As for the cut dimensions, it is written the dimensions that do not include the base part sound stopper.

! *: Per le dimensioni del taglio, sono scritte le dimensioni che non includono la base del bloccaggio di vibrazione.*

63-0A-A10

ASHIKA CODE	MANUFACTURER	CAR NAME	MODEL	YEAR	ForR	REMARKS
63-0A-A10	AUDI	50			R	
	AUDI	80	Variant	1991-1995	R	
	AUDI	80	Avant	1991-1995	R	
	HONDA	LIFE		08.1998-09.2003	R	
	HONDA	That's		02.2002-	R	
	MAZDA	Demio			R	
	SEAT	Cordoba Vario			R	
	VOLKSWAGEN	Derby			R	
	VOLKSWAGEN	Golf Cabrio			R	
	VOLKSWAGEN	Golf I			R	
	VOLKSWAGEN	Jetta I			R	
	VOLKSWAGEN	Polo			R	
	VOLKSWAGEN	Polo Variant			R	
	VOLKSWAGEN	Scirocco			R	

63-0A-A12 (1)

ASHIKA CODE	MANUFACTURER	CAR NAME	MODEL	YEAR	ForR	REMARKS
63-0A-A12	AUDI	A4			R	
	AUDI	A4 Avant			R	
	BMW	5 Series (E28)			R	
	BMW	6 Series (E24)			R	
	FORD	Escort			R	
	FORD	Mk VII			R	
	FORD	RS		1995-02.1999	R	
	FORD	XR-3			R	
	HONDA	ACCORD		07.1997-06.2002	F	
	HONDA	ACCORD		07.1997-06.2002	R	
	HONDA	ACCORD INSPIRE		12.2007-	F	
	HONDA	ACCORD INSPIRE		12.2007-	R	
	HONDA	ACCORD JP4Dr		09.2002-	F	
	HONDA	ACCORD JP4Dr		09.2002-	R	
	HONDA	ACCORD JPWGN		11.2002-	F	
	HONDA	ACCORD JPWGN		11.2002-	R	
	HONDA	ACCORD UA		07.2002-	F	
	HONDA	ACCORD UA		07.2002-	R	
	HONDA	AIRWAVE		05.2005-	R	
	HONDA	AVANCIER		2002	F	
	HONDA	AVANCIER		2002	R	
	HONDA	CIVIC		06.1995-05.2005	R	
	HONDA	CIVIC GSA/SIC		08.2005-	R	
	HONDA	CIVIC TYPE R		08.2001-	R	
	HONDA	CROSSROAD		02.2007-	R	
	HONDA	CR-V		09.1995-10.2001	R	JP/UK/Thailand
	HONDA	CR-V		07.2006-	R	JP/US/UK/Thailand
	HONDA	Edix		06.2004-	R	
	HONDA	ELYSION		05.2004-	F	
	HONDA	ELYSION		05.2004-	R	
	HONDA	ELYSION PRESTIGE		12.2006-	F	
	HONDA	ELYSION PRESTIGE		12.2006-	R	
	HONDA	FCX		10.2002-	R	

O.E.M. names and numbers are used for reference purposes only Ashika assumes no responsibility for possible errors

ASHIKA CODE	MANUFACTURER	CAR NAME	MODEL	YEAR	ForR	REMARKS
63-0A-A12	HONDA	Fit Rr:SSK Assy		08.2007-	R	
	HONDA	Fit ARIA SSM		10.2002-	R	
	HONDA	Fit EU/KQ		08.2002-	R	
	HONDA	FREED Rr:SSK Assy		05.2008-	R	
	HONDA	INSPIRE JP		05.2003-	F	
	HONDA	INSPIRE JP		05.2003-	R	
	HONDA	INTEGRA		03.1995-08.2006	R	
	HONDA	INTEGRA R		06.2004-	R	
	HONDA	LEGEND		08.1998-02.2004	F	
	HONDA	LEGEND		08.1998-02.2004	R	
	HONDA	LEGEND		07.2004-	F	
	HONDA	LEGEND		07.2004-	R	
	HONDA	LEGEND EU/GSA		05.2006-	F	
	HONDA	LEGEND EU/GSA		05.2006-	R	
	HONDA	LOGO		08.1996-09.2001	R	
	HONDA	MOBILIO Spike		12.2002-	R	
	HONDA	NSX		02.1993-11.2001	F	
	HONDA	NSX		02.1993-11.2001	R	
	HONDA	ODYSSEY		09.1997-	R	
	HONDA	ODYSSEY		10.2003-	F	
	HONDA	ODYSSEY Absolute (4WD)		04.2006-	F	
	HONDA	ODYSSEY Absolute (4WD)		04.2006-	R	
	HONDA	ODYSSEY V6		09.1997-11.2003	R	
	HONDA	OLTIA		06.1995-07.2002	R	
	HONDA	PRELUDE		09.1996-12.2001	F	
	HONDA	PRELUDE		09.1996-12.2001	R	
	HONDA	RD-X		05.2006-	R	
	HONDA	S2000		03.1999-08.2004	F	
	HONDA	S2000		03.1999-08.2004	R	
	HONDA	S-MX		12.1996-04.2001	R	
	HONDA	STEP WGN		03.1996-04.2001	R	
	HONDA	STEP WGN		06.2005-	R	
	HONDA	STREAM		06.2006-	R	
	HONDA	US ACCORD		07.2007-	F	
	HONDA	US ACCORD		07.2007-	R	
	MAZDA	121			R	
	MAZDA	929			R	
	MAZDA	929L			R	
	MAZDA	Luce			R	
	SEAT	Toledo			R	
	SKODA	Favorit			R	
	WOLKSWAGEN	Corrado			R	
	WOLKSWAGEN	Golf Cabrio			R	
	WOLKSWAGEN	Golf II			R	
	WOLKSWAGEN	Jetta II			R	
	WOLKSWAGEN	Golf III			R	
	WOLKSWAGEN	Vento			R	
	WOLKSWAGEN	Passat		-1996	R	
	WOLKSWAGEN	Santana		-1988	R	

63-0A-A16

ASHIKA CODE	MANUFACTURER	CAR NAME	MODEL	YEAR	ForR	REMARKS
63-0A-A16	AUDI	100			R	
	AUDI	100 Avant			R	
	AUDI	A4			F	
	AUDI	A4 Avant			F	
	AUDI	A6			R	
	AUDI	A6 Avant		1994-1997	R	
	FIAT	Cinquecento			F	
	FIAT	Seicento			F	
	MERCEDES BENZ	190 Series (201)			F	
	MERCEDES BENZ	E Series			F	
	MERCEDES BENZ	E-Class (124)			F	
	MITSUBISHI	Carisma			R	
	NISSAN	Sunny			R	
	VOLKSWAGEN	Golf III	Variant		R	
	VOLKSWAGEN	Passat		1997-	F	
	VOLVO	S40			R	
	VOLVO	V40			R	

63-0A-A18 (1)

ASHIKA CODE	MANUFACTURER	CAR NAME	MODEL	YEAR	ForR	REMARKS
63-0A-A18	AUTOBIANCHI	Y10			F	
	FIAT	Regata Weekend (138R)			F	
	FIAT	Regata (138R)			F	
	FIAT	Ritmo			F	
	FIAT	Strada (138)			F	
	FIAT	Uno (146) Exc.CS			F	
	FORD	Escort	Express		F	
	FORD	Escort	Mk. V		F	
	FORD	Escort	Mk. VI		F	
	FORD	Escort	Mk. VII		F	
	FORD	Escort	MK III		F	
	FORD	Escort	MK IV		F	
	FORD	Escort	RS	1990-02.1999	F	
	FORD	Escort	Van		F	
	FORD	Escort	XR-3	1980-1990	F	
	FORD	Escort	XR-3		F	
	FORD	Escort Turnier	Mk. V		F	
	FORD	Escort Turnier	Mk. VI		F	
	FORD	Escort Turnier	Mk. VII	1990-02.1999	F	
	FORD	Escort Van	Express		F	
	FORD	Fiesta	Courier		F	
	FORD	Fiesta	Van		F	
	FORD	Fiesta	XR-2	-1996	F	
	FORD	Fiesta Van	Courier		F	
	FORD	Fiesta		1996-02.2002	F	
	FORD	Ka			F	
	FORD	Orion			F	
	HONDA	VAMOS		08.2001-08.2004	F	
	LANCIA	Y10			F	
	MAZDA	121			F	

O.E.M. names and numbers are used for reference purposes only Ashika assumes no responsibility for possible errors

ASHIKA CODE	MANUFACTURER	CAR NAME	MODEL	YEAR	ForR	REMARKS
63-0A-A8	MAZDA	626			R	
	MAZDA	323		1980-1989	F	
	MAZDA	323		1986-1994	R	
	MAZDA	Montrose			R	
	NISSAN	Cherry			R	
	NISSAN	Primera			F	
	NISSAN	Pulsar			R	
	NISSAN	Sunny			R	
	NISSAN	Sunny	Traveller		R	
	OPEL	Corsa A			F	
	OPEL	Corsa B			F	
	OPEL	Corsa Combo			F	
	RENAULT	R5 (Super5)	Express		F	
	RENAULT	R5 (Super5)	Extra		F	
	RENAULT	R5 (Super5)	Rapide		F	
	SEAT	Arosa			F	
	SEAT	Cordoba			F	
	SEAT	Cordoba Vario			F	
	SEAT	Ibiza			F	
	SEAT	Malaga			F	
	SEAT	Toledo			F	
	SKODA	Favorit			F	
	SKODA	Felicia			F	
	TOYOTA	CALDINA	AZT241W	09.2002-		
	TOYOTA	CALDINA	AZT246W	09.2002-		
	TOYOTA	CALDINA	ZZT241W	09.2002-		
	TOYOTA	CAMRY GRACIA	MCV21	12.1996-09.2001		
	TOYOTA	CAMRY GRACIA	MCV21W	12.1996-09.2001		
	TOYOTA	CAMRY GRACIA	MCV25W	06.1997-09.2001		
	TOYOTA	CAMRY GRACIA	SXV20	12.1996-09.2001		
	TOYOTA	CAMRY GRACIA	SXV20W	12.1996-09.2001		
	TOYOTA	CAMRY GRACIA	SXV25	08.1998-09.2001		
	TOYOTA	CAMRY GRACIA	SXV25W	06.1997-09.2001		
	TOYOTA	COROLLA RUNX/ALLEX	NZE121	01.2001-		
	TOYOTA	COROLLA RUNX/ALLEX	ZZE122	09.2002-		
	TOYOTA	COROLLA SPACIO	NZE121N	05.2001-04.2003		
	TOYOTA	COROLLA SPACIO	ZZE122N	05.2001-		
	TOYOTA	COROLLA/FIELDER	CE121	08.2000-04.2004		
	TOYOTA	COROLLA/FIELDER	E121G	08.2000-04.2004		
	TOYOTA	COROLLA/FIELDER	NZE120	08.2000-		
	TOYOTA	COROLLA/FIELDER	NZE121	08.2000-		
	TOYOTA	COROLLA/FIELDER	NZE121G	08.2000-		
	TOYOTA	COROLLA/FIELDER	ZZE122	08.2000-		
	TOYOTA	COROLLA/FIELDER	ZZE122G	08.2000-		
	TOYOTA	MARK II QUALIS WAGON	MCV20W	04.1997-12.2001		
	TOYOTA	MARK II QUALIS WAGON	MCV21W	04.1997-12.2001		
	TOYOTA	MARK II QUALIS WAGON	MCV25W	06.1997-12.2001		
	TOYOTA	MARK II QUALIS WAGON	SXV20W	04.1997-12.2001		
	TOYOTA	MARK II QUALIS WAGON	SXV25W	06.1997-12.2001		
	TOYOTA	PORTE	NNP10	07.2004-		
	TOYOTA	PORTE	NNP11	07.2004-		
	TOYOTA	PORTE	NNP15	01.2006-		
	TOYOTA	RAV 4	ACA31W	11.2005-		
	TOYOTA	VITZ	NCP10	01.1999-01.2005		

63-0A-A18 (3)

ASHIKA CODE	MANUFACTURER	CAR NAME	MODEL	YEAR	ForR	REMARKS
63-0A-A18	TOYOTA	VITZ	NCP13	10.2000-12.2002		1.0B (AT)
	TOYOTA	VITZ	NCP15	09.1999-01.2005		
	TOYOTA	VITZ	SCP10	01.1999-01.2005		
	TOYOTA	VITZ	SCP13	12.2002-01.2005		
	TOYOTA	WINDOM	MCV20	08.1996-07.2001		
	TOYOTA	WINDOM	MCV21	08.1996-07.2001		
	VAUXHALL	Corsa			F	
	VAUXHALL	Corsa Combo			F	
	VAUXHALL	Nova			F	
	VOLKSWAGEN	Corrado			F	
	VOLKSWAGEN	Golf II			F	
	VOLKSWAGEN	Golf III Variant			F	
	VOLKSWAGEN	Golf III Vento			F	
	VOLKSWAGEN	Golf Cabrio			F	
	VOLKSWAGEN	Jetta II			F	
	VOLKSWAGEN	Lupo			F	
	VOLKSWAGEN	Passat		1988-1996	F	
	VOLKSWAGEN	Polo Derby			F	
	VOLKSWAGEN	Polo Variant			F	
	VOLVO	400 Series			F	

63-0A-A20 (1)

ASHIKA CODE	MANUFACTURER	CAR NAME	MODEL	YEAR	ForR	REMARKS
63-0A-A20	ALFA ROMEO	Alfa 155			F	
	ALFA ROMEO	Alfa 164			R	
	CHRYSLER	Chrysler Voyager	Mini-Van		F	
	CHRYSLER	Chrysler Voyager	Town&Country		F	
	CHRYSLER	Chrysler Voyager	Caravan		F	
	CITROËN	Berlingo			F	
	CITROËN	Visa			F	
	CITROËN	Xsara Picasso			F	
	CITROËN	Xara (N2)			F	
	CITROËN	ZX			F	
	DAEWOO	Aranos			F	
	DAEWOO	Cielo			F	
	DAEWOO	Espero			F	
	DAEWOO	Lanos			F	
	DAEWOO	Matiz			F	
	DAEWOO	Nexia			F	
	DAEWOO	Sens			F	
	FIAT	Brava			F	
	FIAT	Bravo			F	
	FIAT	Croma (154)			F	
	FIAT	Croma (154)			R	
	FIAT	Panda			F	
	FIAT	Tempra Famillia (159)			F	
	FIAT	Tempra Station Wagon			F	
	FIAT	Tempra (159)			F	
	FIAT	Tipo (160)			F	
	FORD	Escort	Mk V		F	

O.E.M. names and numbers are used for reference purposes only Ashika assumes no responsibility for possible errors

ASHIKA CODE	MANUFACTURER	CAR NAME	MODEL	YEAR	ForR	REMARKS
	FORD	Escort	Mk VI		F	
	FORD	Escort	XR-3		F	
	FORD	Escort	RS	1990-1995	F	
	FORD	Galaxy			F	
	FORD	Granada (GAE/GGE)			F	
	FORD	Mondeo			F	
	FORD	Scorpio			F	
	FORD	Sierra	XR-4		F	
	FORD	Sierra	Cosworth		F	
	FORD	Sierra			F	
	HONDA	AIRWAVE		05.2005-	F	
	HONDA	Ballade			F	
	HONDA	Ballade CR-X			F	
	HONDA	CIVIC			F	
	HONDA	CIVIC CR-X			F	
	HONDA	CIVIC GSA/SIC		08.2005-	F	
	HONDA	CROSSROAD		02.2007-	F	
	HONDA	Fit ARIA SSM		10.2002-	F	
	HONDA	Fit EU/KQ		11.2002-	F	
	HONDA	FREED Rr: SSK Assy		05.2008-	F	
	HONDA	STREAM		06.2006-	F	
	HYUNDAI	Excel			F	
	HYUNDAI	Pony			F	
	HYUNDAI	S-Coupe			F	
	LADA SAMARA	Diva			F	
	LADA SAMARA	Forma			F	
	LADA SAMARA	Riva			F	
	LADA SAMARA	Sagona			F	
	LANCIA	Dedra (835)			F	
63-0A-A20	LANCIA	Delta			F	
	LANCIA	Delta (836)			F	
	LANCIA	Prisma (831)			F	
	LANCIA	Thema			F	
	LANCIA	Thema			R	
	MAZDA	Demio	DE	2007-		
	MERCEDES BENZ	V-Class			F	
	MERCEDES BENZ	Vito			F	
	MITSUBISHI	Carisma			F	
	MITSUBISHI	Colt			F	
	MITSUBISHI	Cordia&Tredia			F	
	MITSUBISHI	Eclipse			F	
	MITSUBISHI	Expo			F	
	MITSUBISHI	Galant			F	
	MITSUBISHI	Lancer	Estate		F	
	MITSUBISHI	Lancer			F	
	MITSUBISHI	Sapporo (Lambda)			F	
	MITSUBISHI	Sigma			F	
	MITSUBISHI	Space Wagon			F	
	MITSUBISHI	Space Van (chariot)			F	
	NISSAN	Primera			R	
	OPEL	Aero			F	
	OPEL	Astra			F	
	OPEL	Commodore			F	
	OPEL	Corsa A			F	
	OPEL	Corsa B			F	
	OPEL	Kadett			F	
	OPEL	Monza			F	
	OPEL	Olympia			F	
	OPEL	Rekord			F	

63-0A-A20 (3)

ASHIKA CODE	MANUFACTURER	CAR NAME	MODEL	YEAR	ForR	REMARKS
63-0A-A20	OPEL	Record Caravan			F	
	OPEL	Senator			F	
	OPEL	Tigra			F	
	OPEL	Vectra B			F	
	PEUGEOT	106			F	
	PEUGEOT	205			F	
	PEUGEOT	305			F	
	PEUGEOT	306			F	
	PEUGEOT	309			F	
	PEUGEOT	405			F	
	PEUGEOT	505			F	
	PEUGEOT	Kangoo			F	
	PEUGEOT	Partner			F	
	RENAULT	Ranch			F	
	ROVER	200 Series			F	
	SEAT	Alhambra			F	
	SUBARU	Justy,J Series			F	
	SUZUKI	Swift			F	
	TOYOTA	Camry			F	
	TOYOTA	Celica			F	
	TOYOTA	Corolla & Sprinter		1970-04.1987	F	
	TOYOTA	Corolla		05.1987-04.1997	F	
	TOYOTA	PROBOX	NCP59G	06.2002-		1.5WGN
	TOYOTA	PROBOX/SUCCEED	NCP50V	06.2002-		
	TOYOTA	PROBOX/SUCCEED	NCP51V	06.2002-		
	TOYOTA	PROBOX/SUCCEED	NCP52V	04.2003-		
	TOYOTA	PROBOX/SUCCEED	NCP55V	06.2002-		
	TOYOTA	PROBOX/SUCCEED	NCP58G	06.2002-		
	TOYOTA	PROBOX/SUCCEED	NCP59G	06.2002-		
	TOYOTA	PROBOX/SUCCEED	NLP51V	06.2002-		
	TOYOTA	Starlet			F	
	VAUXHALL	Astra			F	
	VAUXHALL	Belmont			F	
	VAUXHALL	Carlton			F	
	VAUXHALL	Corsa			F	
	VAUXHALL	Nova			F	
	VAUXHALL	Omega			F	
	VAUXHALL	Royale			F	
	VAUXHALL	Senator			F	
	VAUXHALL	Tigra			F	
	VAUXHALL	Vectra B			F	
	VAUXHALL	Viceroy			F	
	VOLKSWAGEN	Golf I			F	
	VOLKSWAGEN	Golf Cabrio			F	
	VOLKSWAGEN	Golf Caddy			F	
	VOLKSWAGEN	Jetta I			F	
	VOLKSWAGEN	Scirocco			F	
	VOLKSWAGEN	Sharan (7M)			F	
	VOLVO	850			F	
	VOLVO	300 Series			F	
	VOLVO	C 70			F	
	VOLVO	S 40			F	
	VOLVO	S 70			F	
	VOLVO	V 40			F	
	VOLVO	V 70			F	

O.E.M. names and numbers are used for reference purposes only Ashika assumes no responsibility for possible errors

ASHIKA CODE	MANUFACTURER	CAR NAME	MODEL	YEAR	ForR	REMARKS
	ALFA ROMEO	Alfa 145			F	
	ALFA ROMEO	Alfa 146			F	
	FIAT	Marea			F	
	FORD	Mondeo			R	
	HONDA	CIVIC TYPE R		08.2001-05.2005	F	
	HONDA	CIVIC TYPE R		12.2006-	F	
	HONDA	CR-V		07.2006-	F	JP/US/UK/Thailand
	HONDA	Fit	GE6	2007-		
	HONDA	HR-V		08.1998-09.2003	F	
	HONDA	INTEGRA		03.1995-08.2006	F	
	HONDA	INTEGRA R		06.2004-	F	
	HONDA	OLTIA		06.1995-07.2002	F	
	HONDA	RD-X		05.2006-	F	
	HONDA	S-MX		12.1996-04.2001	F	
	MAZDA	323		1980-1989	R	
	MITSUBISHI	DELICA SPACE GEAR	PA3V	03.1994-	R	
	MITSUBISHI	DELICA SPACE GEAR	PA4W	03.1994-	R	
	MITSUBISHI	DELICA SPACE GEAR	PD4W ECS	03.1994-	R	
	MITSUBISHI	DELICA SPACE GEAR	PD4W	03.1994-	R	
	MITSUBISHI	DELICA SPACE GEAR	PA5V	03.1994-	R	
	MITSUBISHI	DELICA SPACE GEAR	PB5V	03.1994-	R	
	MITSUBISHI	DELICA SPACE GEAR	PD5V	03.1994-	R	
	MITSUBISHI	DELICA SPACE GEAR	PA5W	03.1994-	R	
	MITSUBISHI	DELICA SPACE GEAR	PB5W	03.1994-	R	
	MITSUBISHI	DELICA SPACE GEAR	PC5W	03.1994-	R	
	MITSUBISHI	DELICA SPACE GEAR	PB6W	03.1994-	R	
	MITSUBISHI	DELICA SPACE GEAR	PD6W ECS	03.1994-	R	
	MITSUBISHI	DELICA SPACE GEAR	PF6W ECS	03.1994-	R	
	MITSUBISHI	DELICA SPACE GEAR	PF6W	03.1994-	R	
63-0A-A22	MITSUBISHI	DELICA SPACE GEAR	PD8W ECS	03.1994-	R	
	MITSUBISHI	DELICA SPACE GEAR	PD8W	03.1994-	R	
	MITSUBISHI	DELICA SPACE GEAR	PE8W ECS	03.1994-	R	
	MITSUBISHI	DELICA SPACE GEAR	PE8W	03.1994-	R	
	MITSUBISHI	DELICA SPACE GEAR	PF8W ECS	03.1994-	R	
	MITSUBISHI	DELICA SPACE GEAR	PF8W	03.1994-	R	
	MITSUBISHI	PAJERO	V23C ECS	10.1990-06.1994	R	
	MITSUBISHI	PAJERO	V23W ECS	10.1990-	R	
	MITSUBISHI	PAJERO	V24C ECS	10.1990-04.1995	R	
	MITSUBISHI	PAJERO	V24W ECS	10.1990-	R	
	MITSUBISHI	PAJERO	V24WG ECS	10.1990-06.1994	R	
	MITSUBISHI	PAJERO	V25C ECS	07.1994-	R	
	MITSUBISHI	PAJERO	V25W ECS	07.1993-	R	
	MITSUBISHI	PAJERO	V26W ECS	07.1993-06.1994	R	
	MITSUBISHI	PAJERO	V25WG ECS	07.1993-	R	
	MITSUBISHI	PAJERO	V43W ECS	10.1990-	R	
	MITSUBISHI	PAJERO	V44W ECS	10.1990-03.1992	R	
	MITSUBISHI	PAJERO	V44WG ECS	10.1990-06.1993	R	
	MITSUBISHI	PAJERO	V45W ECS	07.1993-	R	
	MITSUBISHI	PAJERO	V46W ECS	07.1993-	R	
	MITSUBISHI	PAJERO	V44WG ECS	07.1993-	R	
	NISSAN	TERRANO	LBYD21 (Adjustable)	08.1986-09-1989	R	
	NISSAN	TERRANO	LR50	09.1995-	R	
	NISSAN	TERRANO	LR50 (Adjustable)	09.1995-	R	
	NISSAN	TERRANO	PR50	09.1995-	R	
	NISSAN	TERRANO	PR50 (Adjustable)	09.1995-	R	
	NISSAN	TERRANO	VBYD21 (Adjustable)	08.1986-08.1995	R	
	NISSAN	TERRANO	WBYD21 (Adjustable)	08.1986-08.1995	R	
	NISSAN	TERRANO	WHYD21 (Adjustable)	08.1986-08.1995	R	
	OPEL	Ascona			F	

ASHIKA CODE	MANUFACTURER	CAR NAME	MODEL	YEAR	ForR	REMARKS
	OPEL	Calibra			F	
	OPEL	Monta			F	
	OPEL	Vectra A			F	
	PEUGEOT	206			F	
	TOYOTA	ALPHARD G/V	ANH10W	05.2002-		
	TOYOTA	ALPHARD G/V	ANH15W	05.2002-		
	TOYOTA	ALPHARD G/V	MNH10W	05.2002-08.2004		
	TOYOTA	ALPHARD G/V	MNH15W	05.2002-04.2005		
	TOYOTA	bB	NCP30	01.2000-12.2005		
	TOYOTA	bB	NCP31	01.2000-04.2006		
	TOYOTA	bB	NCP34	06.2001-03.2003		
	TOYOTA	bB	NCP35	01.2000-12.2005		
	TOYOTA	CAMRY	ACV30	09.2001-01.2006		
	TOYOTA	CAMRY	ACV35	09.2001-01.2006		
	TOYOTA	CAMRY	ACV40	01.2001-		
	TOYOTA	CAMRY	ACV45	01.2001-		
	TOYOTA	CELICA	ZZT230	08.1999-		
	TOYOTA	CELICA	ZZT231	08.1999-04.2006		
	TOYOTA	COROLLA RUNX/ALLEX	NZE124	01.2001-		
	TOYOTA	COROLLA RUNX/ALLEX	ZZE124	09.2002-		
	TOYOTA	COROLLA SPACIO	ZZE124N	08.2001-		
	TOYOTA	COROLLA/FIELDER	NZE124	08.2000-		
	TOYOTA	COROLLA/FIELDER	NZE124G	08.2000-		
	TOYOTA	COROLLA/FIELDER	ZZE124	08.2000-		
	TOYOTA	COROLLA/FIELDER	ZZE124G	08.2000-		
	TOYOTA	COROLLA/FIELDER	ZZE124G	08.2000-09.2002		1.8WGN 4WD
	TOYOTA	CORONA PREMIO	AT210	01.1996-12.2001		
	TOYOTA	CORONA PREMIO	AT211	01.1996-12.2001		
	TOYOTA	CORONA PREMIO	CT210	01.1996-12.1997		
63-0A-A22	TOYOTA	CORONA PREMIO	CT215	01.1996-12.1997		
	TOYOTA	CORONA PREMIO	ST210	01.1996-12.2001		
	TOYOTA	CORONA PREMIO	ST215	01.1996-12.2001		
	TOYOTA	ESTIMA	TCR10W	02.1993-12.1999		
	TOYOTA	ESTIMA	TCR11W	05.1990-12.1999		
	TOYOTA	ESTIMA	TCR20W	02.1993-12.1999		
	TOYOTA	ESTIMA	TCR21W	05.1990-12.1999		
	TOYOTA	ESTIMA EMINA/LUCIDA	CRX10G	01.1992-08.1999		
	TOYOTA	ESTIMA EMINA/LUCIDA	CRX11G	01.1992-08.1999		
	TOYOTA	ESTIMA EMINA/LUCIDA	CRX20G	01.1992-08.1999		
	TOYOTA	ESTIMA EMINA/LUCIDA	CRX21G	01.1992-08.1999		
	TOYOTA	ESTIMA EMINA/LUCIDA	TCR10G	01.1992-12.1999		
	TOYOTA	ESTIMA EMINA/LUCIDA	TCR11G	01.1992-12.1999		
	TOYOTA	ESTIMA EMINA/LUCIDA	TCR20G	01.1992-12.1999		
	TOYOTA	ESTIMA EMINA/LUCIDA	TCR21G	01.1992-12.1999		
	TOYOTA	ESTIMA T/L	ACR30W	02.2000-08.2004		
	TOYOTA	ESTIMA T/L	ACR30W	02.2000-08.2004		2.4 AERAS
	TOYOTA	ESTIMA T/L	ACR40W	02.2000-04.2003		
	TOYOTA	ESTIMA T/L	MCR30W	12.1999-08.2004		
	TOYOTA	ESTIMA T/L	MCR40W	12.1999-08.2004		
	TOYOTA	FUN CARGO	NCP20	08.1999-09.2005		
	TOYOTA	FUN CARGO	NCP21	08.1999-08.2001		
	TOYOTA	FUN CARGO	NCP25	08.1999-09.2005		
	TOYOTA	HARRIER	ACU30W	02.2003-		
	TOYOTA	HARRIER	ACU35W	02.2003-		
	TOYOTA	HARRIER	MCU30W	02.2003-01.2006		
	TOYOTA	HARRIER	MCU35W	02.2003-01.2006		
	TOYOTA	Hilux	KZN130G TEMS	08.1993-	R	
	TOYOTA	Hilux	KZN130W TEMS	08.1990-	R	
	TOYOTA	Hilux	LN130G TEMS	04.1989-08.1993	R	

O.E.M. names and numbers are used for reference purposes only Ashika assumes no responsibility for possible errors

ASHIKA CODE	MANUFACTURER	CAR NAME	MODEL	YEAR	ForR	REMARKS
63-0A-A22	TOYOTA	Hilux	LN130W TEMS	08.1990-08.1993	R	
	TOYOTA	Hilux	VZN130G TEMS	08.1990-11.1995	R	
	TOYOTA	Hilux	YN130G TEMS	04.1989-08.1991	R	
	TOYOTA	IPSUM	ACM21W	05.2001-		
	TOYOTA	IPSUM	ACM26W	05.2001-		
	TOYOTA	IST	NCP60	04.2002-		
	TOYOTA	IST	NCP61	04.2002-		
	TOYOTA	IST	NCP65	04.2002-		
	TOYOTA	KLUGER L/V	ACU20W	11.2000-		
	TOYOTA	KLUGER L/V	ACU25W	11.2000-		
	TOYOTA	KLUGER L/V	MCU20W	11.2000-		
	TOYOTA	KLUGER L/V	MCU25W	11.2000-		
	TOYOTA	LAND CRUISER (BAN)	FZJ80G TEMS	08.1992-		
	TOYOTA	LAND CRUISER (BAN)	HDJ81V TEMS	08.1992-		
	TOYOTA	LAND CRUISER (BAN)	HZJ81V TEMS	08.1992-		
	TOYOTA	NOAH/VOXY	AZR60G	11.2001-		
	TOYOTA	NOAH/VOXY	AZR65G	11.2001-		
	TOYOTA	OPA	ACT10	08.2000-04.2005		
	TOYOTA	OPA	ZCT10	04.2000-04.2005		
	TOYOTA	OPA	ZCT15	04.2000-04.2005		
	TOYOTA	PLATZ	NCP12	08.1999-12.2005		
	TOYOTA	PLATZ	NCP16	08.1999-12.2005		
	TOYOTA	PLATZ	SCP11	08.1999-12.2005		
	TOYOTA	PREMIO/ALLION	AZT240	12.2001-		
	TOYOTA	PREMIO/ALLION	NZT240	12.2001-		
	TOYOTA	PREMIO/ALLION	ZZT240	12.2001-		
	TOYOTA	PREMIO/ALLION	ZZT245	12.2001-		
	TOYOTA	SIENTA	NCP81G	09.2003-		
	TOYOTA	SIENTA	NCP85G	09.2003-		
	TOYOTA	WILL CYPHA	NCP70	09.2002-07.2005		
	TOYOTA	WILL CYPHA	NCP75	09.2002-07.2005		
	TOYOTA	WILL VI	NCP19	01.2000-12.2001		
	TOYOTA	WILL VS	NZE127	04.2001-04.2004		
	TOYOTA	WILL VS	ZZE127	04.2001-04.2004		
	TOYOTA	WILL VS	ZZE128	04.2001-04.2004		
	TOYOTA	WILL VS	ZZE129	04.2001-04.2004		
	TOYOTA	WINDOM	MCV30	07.2001-07.2003		
	TOYOTA	WISH	ANE10G	04.2003-		
	TOYOTA	WISH	ANE11W	04.2003-		
	TOYOTA	WISH	ZNE10G	01.2003-		
	TOYOTA	WISH	ZNE14G	01.2003-		
	VAUXHALL	Calibra			F	
	VAUXHALL	Vectra			F	
	VOLVO	740			F	
	VOLVO	745			F	
	VOLVO	760			F	
	VOLVO	780			F	
	VOLVO	940			F	
	VOLVO	960			F	
	VOLVO	240 series			F	
	VOLVO	242 series			F	
	VOLVO	244 series			F	
	VOLVO	245 series			F	
	VOLVO	260 series			F	
	VOLVO	264 series			F	
	VOLVO	265 series			F	

GOM-100	Engine Support	NISSAN	11210-01B01
Length [mm]	93	NISSAN	MICRA (K11) 1.0 i 16V
Width [mm]	64,5	NISSAN	MICRA (K11) 1.3 i 16V
Height [mm]	84,5	NISSAN	MICRA (K11) 1.4 i 16V
Inner diameter [mm]	11		

GOM-101	Engine Support	NISSAN	11220-35G00
Assembly side	Front Left	NISSAN	PICK UP/KING CAB (720) 1.8/2.2/2.2 D/2.3 D/2.5 D
Length [mm]	135	NISSAN	PICK UP/KING CAB (D21) 2.0/2.3 D/2.4 i/2.5 D/2.7 D/3.0 i V6
Width [mm]	104	NISSAN	PICK UP/KING CAB/NAVARA (D22) 2.4 i/2.5 D/2.5 TD/3.2 D
Height [mm]	97	NISSAN	TERRANO I (WD21) 2.4 i 4WD/2.7 TD/3.0 i
		NISSAN	TERRANO II (R20) 2.4 /2.7 TD/3.0 Di

GOM-102	Engine Support	NISSAN	11210-35G00
Assembly side	Front Right	NISSAN	PICK UP/KING CAB (720) 1.8/2.2/2.2 D/2.3 D/2.5 D
Length [mm]	153	NISSAN	PICK UP/KING CAB (D21) 2.0/2.3 D/2.4 i/2.5 D/2.7 D/3.0 i V6
Width [mm]	132	NISSAN	PICK UP/KING CAB/NAVARA (D22) 2.4 i/2.5 D/2.5 TD/3.2 D
Height [mm]	60	NISSAN	TERRANO I (WD21) 2.4 i 4WD/2.7 TD/3.0 i
		NISSAN	TERRANO II (R20) 2.4 /2.7 TD/3.0 Di

GOM-103	Engine Support	NISSAN	11320-01G00
Assembly side	Rear	NISSAN	PICK UP/KING CAB (720) 1.8/2.2/2.2 D/2.3 D/2.5 D
Length [mm]	140	NISSAN	PICK UP/KING CAB (D21) 2.0/2.3 D/2.4 i/2.5 D/2.7 D/3.0 i V6
Width [mm]	102	NISSAN	PICK UP/KING CAB/NAVARA (D22) 2.4 i/2.5 D/2.5 TD/3.2 D
Height [mm]	64	NISSAN	TERRANO I (WD21) 2.4 i 4WD/2.7 TD/3.0 i
		NISSAN	TERRANO II (R20) 2.4 /2.7 TD/3.0 Di

GOM-104	Engine Support	NISSAN	11220-10J00
Assembly side	Front Engine	NISSAN	PATROL GR I (Y60) 2.8 TD (Y60A)/4.2/4.2 D
Length [mm]	129	NISSAN	PATROL GR II (Y61) 2.8 TD/3.0 DTi/4.2 TD/4.5 i
Width [mm]	121	NISSAN	PATROL Hardtop (K160) 2.8 (K160)/3.2 TD/3.3 D
Height [mm]	59	NISSAN	PATROL Hardtop (K260) 2.8/2.8 TD/3.2 D
		NISSAN	PATROL Station Wagon (W160) 2.8 (W160)/3.2 TD/3.3 D
		NISSAN	PATROL Station Wagon (W260) 2.8 TD/3.2 D

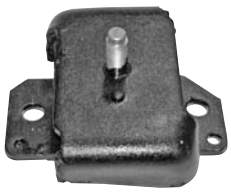

GOM-105	Suspension, Engine	NISSAN	11320-06J00
Assembly side	Rear Engine		
Length [mm]	135	NISSAN	PATROL GR I (Y60) 2.8 TD (Y60A)/4.2/4.2 D
Width [mm]	102,5	NISSAN	PATROL GR II (Y61) 2.8 TD/3.0 DTi/4.2 TD/4.5 i
Height [mm]	65	NISSAN	PATROL Hardtop (K160) 2.8 (K160)/3.2 TD/3.3 D
		NISSAN	PATROL Hardtop (K260) 2.8/2.8 TD/3.2 D
		NISSAN	PATROL Station Wagon (W160) 2.8 (W160)/3.2 TD/3.3 D
		NISSAN	PATROL Station Wagon (W260) 2.8 TD/3.2 D

GOM-106	Support	NISSAN	37521-34G25
Specification	CamShafts	NISSAN	PICK UP/KING CAB (720) 1.8/2.2/2.2 D/2.3 D/2.5 D
Length [mm]	117,5	NISSAN	PICK UP/KING CAB (D21) 2.0/2.3 D/2.4 i/2.5 D/2.7 D/3.0 i V6
Width [mm]	119	NISSAN	PICK UP/KING CAB/NAVARA (D22) 2.4 i/2.5 D/2.5 TD/3.2 D
Height [mm]	48	NISSAN	TERRANO I (WD21) 2.4 i 4WD/2.7 TD/3.0 i
Inner diameter [mm]	30	NISSAN	TERRANO II (R20) 2.4 /2.7 TD/3.0 Di

GOM-107	Silentblock Track Control Arm	NISSAN	54423-B9500
Specification	Arm lower	NISSAN	PICK UP/KING CAB (720) 1.8/2.2/2.2 D/2.3 D/2.5 D
Length [mm]	81	NISSAN	PICK UP/KING CAB (D21) 2.0/2.3 D/2.4 i/2.5 D/2.7 D/3.0 i V6
Inner diameter [mm]	18	NISSAN	PICK UP/KING CAB/NAVARA (D22) 2.4 i/2.5 D/2.5 TD/3.2 D
Outsider diameter [mm]	41	NISSAN	TERRANO I (WD21) 2.4 i 4WD/2.7 TD/3.0 i

O.E.M. names and numbers are used for reference purposes only Ashika assumes no responsibility for possible errors

GOM-108	Silentblock Track Control Arm	NISSAN	54506-B9500
Specification	Arm upper	NISSAN	PICK UP/KING CAB (720) 1.8/2.2/2.2 D/2.3 D/2.5 D
Length [mm]	48	NISSAN	PICK UP/KING CAB (D21) 2.0/2.3 D/2.4 i/2.5 D/2.7 D/3.0 i V6
Inner diameter [mm]	17,5	NISSAN	PICK UP/KING CAB/NAVARA (D22) 2.4 i/2.5 D/2.5 TD/3.2 D
Outsider diameter [mm]	41	NISSAN	TERRANO I (WD21) 2.4 i 4WD/2.7 TD/3.0 i
		NISSAN	TERRANO II (R20) 2.4 /2.7 TD/3.0 Di

GOM-109	Bushings spring	NISSAN	55046-01G00
Assembly side	Rear	NISSAN	PICK UP/KING CAB (720) 1.8/2.2/2.2 D/2.3 D/2.5 D
Length [mm]	37	NISSAN	PICK UP/KING CAB (D21) 2.0/2.3 D/2.4 i/2.5 D/2.7 D/3.0 i V6
Inner diameter [mm]	20	NISSAN	PICK UP/KING CAB/NAVARA (D22) 2.4 i/2.5 D/2.5 TD/3.2 D
Outsider diameter [mm]	32,5	NISSAN	TERRANO I (WD21) 2.4 i 4WD/2.7 TD/3.0 i
		NISSAN	TERRANO II (R20) 2.4 /2.7 TD/3.0 Di

GOM-110	Silentblock spring	NISSAN	54560-01G00
Assembly side	Rear	NISSAN	PICK UP/KING CAB (720) 1.8/2.2/2.2 D/2.3 D/2.5 D
Length [mm]	65,3	NISSAN	PICK UP/KING CAB (D21) 2.0/2.3 D/2.4 i/2.5 D/2.7 D/3.0 i V6
Inner diameter [mm]	16	NISSAN	PICK UP/KING CAB/NAVARA (D22) 2.4 i/2.5 D/2.5 TD/3.2 D
Outsider diameter [mm]	33,3	NISSAN	TERRANO I (WD21) 2.4 i 4WD/2.7 TD/3.0 i
		NISSAN	TERRANO II (R20) 2.4 /2.7 TD/3.0 Di
		NISSAN	URVAN Autobus (E24) 2.4 i/2.5 D/2.0/2.3 D

GOM-112	Bushings Bar Stabilizing	NISSAN	56112-09400
Assembly side	Front	NISSAN	56112-0F000
Length [mm]	16,5	NISSAN	56112-V0100
Inner diameter [mm]	10	NISSAN	56113-60U05
Outsider diameter [mm]	25	NISSAN	PATROL Hardtop (K160) 2.8/3.2 TD/3.3 D
		NISSAN	PATROL Hardtop (K260) 2.8/2.8 TD
		NISSAN	PATROL Station Wagon (W160) 2.8/3.2 TD/3.3 D
		NISSAN	PATROL Station Wagon (W260) 2.8 TD
		NISSAN	PICK UP/KING CAB (720) 1.8/2.2/2.2 D/2.3 D/2.5 D
		NISSAN	PICK UP/KING CAB (D21) 2.0/2.3 D/2.4 i/2.5 D/2.7 D/3.0 i V6
		NISSAN	PICK UP/KING CAB/NAVARA (D22) 2.4 i/2.5 D/2.5 TD/3.2 D
		NISSAN	TERRANO I (WD21) 2.4 i 4WD/2.7 TD/3.0 i
		NISSAN	TERRANO II (R20) 2.4 /2.7 TD/3.0 Di

GOM-113	Bushings Bar Stabilizing	NISSAN	54613-14900
Assembly side	Front	NISSAN	PICK UP/KING CAB (720) 1.8/2.2/2.2 D/2.3 D/2.5 D
Length [mm]	38	NISSAN	PICK UP/KING CAB (D21) 2.0/2.3 D/2.4 i/2.5 D/2.7 D/3.0 i V6
Width [mm]	33	NISSAN	PICK UP/KING CAB/NAVARA (D22) 2.4 i/2.5 D/2.5 TD/3.2 D
Height [mm]	35	NISSAN	TERRANO I (WD21) 2.4 i 4WD/2.7 TD/3.0 i
Inner diameter [mm]	20,5	NISSAN	TERRANO II (R20) 2.4 /2.7 TD/3.0 Di

GOM-114	Bushings attack bodywork	NISSAN	54476-F0200
Assembly side	Front	NISSAN	PICK UP/KING CAB (720) 1.8/2.2/2.2 D/2.3 D/2.5 D
Length [mm]	33	NISSAN	PICK UP/KING CAB (D21) 2.0/2.3 D/2.4 i/2.5 D/2.7 D/3.0 i V6
Inner diameter [mm]	22	NISSAN	PICK UP/KING CAB/NAVARA (D22) 2.4 i/2.5 D/2.5 TD/3.2 D
Outsider diameter [mm]	50	NISSAN	TERRANO I (WD21) 2.4 i 4WD/2.7 TD/3.0 i
		NISSAN	TERRANO II (R20) 2.4 /2.7 TD/3.0 Di

GOM-115	Bushings attack bodywork	NISSAN	54476-01W00
Assembly side	Front	NISSAN	54477-T6000
Length [mm]	34	NISSAN	54479-50W00
Inner diameter [mm]	22	NISSAN	PICK UP/KING CAB (720) 1.8/2.2/2.2 D/2.3 D/2.5 D
Outsider diameter [mm]	50	NISSAN	PICK UP/KING CAB (D21) 2.0/2.3 D/2.4 i/2.5 D/2.7 D/3.0 i V6
		NISSAN	PICK UP/KING CAB/NAVARA (D22) 2.4 i/2.5 D/2.5 TD/3.2 D
		NISSAN	TERRANO I (WD21) 2.4 i 4WD/2.7 TD/3.0 i
		NISSAN	TERRANO II (R20) 2.4 /2.7 TD/3.0 Di

GOM-116	Bushings spring	NISSAN	55045-10W00
Assembly side	Rear	NISSAN	PATROL GR I (Y60) 2.8 TD/4.2/4.2 D/
Length [mm]	37	NISSAN	PATROL GR II (Y61) 2.8 TD/3.0 DTi/4.2 TD/4.5 i
Inner diameter [mm]	18	NISSAN	PATROL Hardtop (K160) 2.8 (K160)
Outsider diameter [mm]	40	NISSAN	PATROL Hardtop (K160) 2.8/3.2 TD/3.3 D
		NISSAN	PATROL Hardtop (K260) 2.8/2.8 TD/3.2 D
		NISSAN	PATROL Station Wagon (W160) 2.8/3.2 TD/3.3 D
		NISSAN	PATROL Station Wagon (W260) 2.8 TD/3.2 D
		NISSAN	PICK UP/KING CAB (720) 1.8/2.2/2.2 D/2.3 D/2.5 D
		NISSAN	PICK UP/KING CAB (D21) 2.0/2.3 D/2.4 i/2.5 D/2.7 D/3.0 i V6
		NISSAN	PICK UP/KING CAB/NAVARA (D22) 2.4 i/2.5 D/2.5 TD/3.2 D
		NISSAN	TERRANO I (WD21) 2.4 i 4WD/2.7 TD/3.0 i
		NISSAN	TERRANO II (R20) 2.4 /2.7 TD/3.0 Di

GOM-117	Bushings spring	NISSAN	55046-C6000
Assembly side	Rear	NISSAN	55046-G9600
Length [mm]	51	NISSAN	55046-C6000
Inner diameter [mm]	18	NISSAN	PATROL GR I (Y60) 2.8 TD/4.2/4.2 D/
Outsider diameter [mm]	33	NISSAN	PATROL GR II (Y61) 2.8 TD/3.0 DTi/4.2 TD/4.5 i
		NISSAN	PATROL Hardtop (K160) 2.8 (K160)
		NISSAN	PATROL Hardtop (K160) 2.8/3.2 TD/3.3 D
		NISSAN	PATROL Hardtop (K260) 2.8/2.8 TD/3.2 D
		NISSAN	PATROL Station Wagon (W160) 2.8/3.2 TD/3.3 D
		NISSAN	PATROL Station Wagon (W260) 2.8 TD/3.2 D

GOM-118	Bushings attack bodywork	NISSAN	54476-01G00
Assembly side	Front	NISSAN	PATROL GR I (Y60) 2.8 TD/4.2/4.2 D/
Length [mm]	35	NISSAN	PATROL GR II (Y61) 2.8 TD/3.0 DTi/4.2 TD/4.5 i
Inner diameter [mm]	21	NISSAN	PATROL Hardtop (K160) 2.8 (K160)
Outsider diameter [mm]	51	NISSAN	PATROL Hardtop (K160) 2.8/3.2 TD/3.3 D
		NISSAN	PATROL Hardtop (K260) 2.8/2.8 TD/3.2 D
		NISSAN	PATROL Station Wagon (W160) 2.8/3.2 TD/3.3 D
		NISSAN	PATROL Station Wagon (W260) 2.8 TD/3.2 D

GOM-119	Silentblock Track Control Arm	NISSAN	54560-01J00
Assembly side	Front	NISSAN	PATROL GR I (Y60) 2.8 TD/4.2/4.2 D/
Length [mm]	50,2	NISSAN	PATROL GR II (Y61) 2.8 TD/3.0 DTi/4.2 TD/4.5 i
Inner diameter [mm]	16	NISSAN	PATROL Hardtop (K160) 2.8 (K160)
Outsider diameter [mm]	60,3	NISSAN	PATROL Hardtop (K160) 2.8/3.2 TD/3.3 D
		NISSAN	PATROL Hardtop (K260) 2.8/2.8 TD/3.2 D
		NISSAN	PATROL Station Wagon (W160) 2.8/3.2 TD/3.3 D
		NISSAN	PATROL Station Wagon (W260) 2.8 TD/3.2 D

GOM-120	Bushings spring	NISSAN	55045-G2500
Assembly side	Front/Rear	NISSAN	PATROL GR I (Y60) 2.8 TD/4.2/4.2 D/
Length [mm]	38,5	NISSAN	PATROL GR II (Y61) 2.8 TD/3.0 DTi/4.2 TD/4.5 i
Inner diameter [mm]	18	NISSAN	PATROL Hardtop (K160) 2.8 (K160)
Outsider diameter [mm]	45	NISSAN	PATROL Hardtop (K160) 2.8/3.2 TD/3.3 D
		NISSAN	PATROL Hardtop (K260) 2.8/2.8 TD/3.2 D
		NISSAN	PATROL Station Wagon (W160) 2.8/3.2 TD/3.3 D
		NISSAN	PATROL Station Wagon (W260) 2.8 TD/3.2 D

GOM-121	Bushings Bar Stabilizing	NISSAN	54613-43G00
Assembly side	Front	NISSAN	PICK UP/KING CAB (D21) 2.0/2.3 D/2.4 i/2.5 D/2.7 D/3.0 i V6
Length [mm]	54	NISSAN	TERRANO I (WD21) 2.4 i 4WD/2.7 TD/3.0 i
Width [mm]	37	NISSAN	TERRANO II (R20) 2.4 /2.7 TD/3.0 Di
Height [mm]	35		
Inner diameter [mm]	21		

O.E.M. names and numbers are used for reference purposes only Ashika assumes no responsibility for possible errors

GOM-122	Bushings Bar Stabilizing	NISSAN	54613-W1410
Assembly side	Front	NISSAN	PICK UP/KING CAB (D21) 2.0/2.3 D/2.4 i/2.5 D/2.7 D/3.0 i V6
Length [mm]	28,5	NISSAN	TERRANO I (WD21) 2.4 i 4WD/2.7 TD/3.0 i
Width [mm]	32	NISSAN	TERRANO II (R20) 2.4 /2.7 TD/3.0 Di
Height [mm]	38		
Inner diameter [mm]	23		

GOM-123	Bushings Bar Stabilizing	NISSAN	54613-01J11
Assembly side	Front	NISSAN	PATROL GR I (Y60) 2.8 TD/4.2/4.2 D/
Length [mm]	34	NISSAN	PATROL GR II (Y61) 2.8 TD/3.0 DTi/4.2 TD/4.5 i
Width [mm]	25	NISSAN	PATROL Hardtop (K160) 2.8 (K160)
Height [mm]	42	NISSAN	PATROL Hardtop (K160) 2.8/3.2 TD/3.3 D
Inner diameter [mm]	14	NISSAN	PATROL Hardtop (K260) 2.8/2.8 TD/3.2 D
		NISSAN	PATROL Station Wagon (W160) 2.8/3.2 TD/3.3 D
		NISSAN	PATROL Station Wagon (W260) 2.8 TD/3.2 D
		NISSAN	PICK UP/KING CAB (D21) 2.0/2.3 D/2.4 i/2.5 D/2.7 D/3.0 i V6
		NISSAN	TERRANO I (WD21) 2.4 i 4WD/2.7 TD/3.0 i
		NISSAN	TERRANO II (R20) 2.4 /2.7 TD/3.0 Di

GOM-124	Bushings Bar Stabilizing	NISSAN	54613-06J10
Assembly side	Front	NISSAN	PATROL GR I (Y60) 2.8 TD/4.2/4.2 D/
Length [mm]	46		
Width [mm]	32		
Height [mm]	34		
Inner diameter [mm]	17		

GOM-125	Bar stabilizing Bushings	NISSAN	54613-0F001
Assembly side	Front	NISSAN	PATROL GR I (Y60) 2.8 TD/4.2/4.2 D/
Length [mm]	36		
Width [mm]	35		
Height [mm]	43,5		
Inner diameter [mm]	23		

GOM-126	Bar stabilizing Bushings	NISSAN	54476-01J00
Assembly side	Front	NISSAN	PATROL GR I (Y60) 2.8 TD/4.2/4.2 D
Length [mm]	40		
Inner diameter [mm]	24		
Outsider diameter [mm]	37		

GOM-127	Bar stabilizing Bushings	NISSAN	55135-01J00
Assembly side	Front	NISSAN	PATROL GR I (Y60) 2.8 TD/4.2/4.2 D
Length [mm]	27,5		
Inner diameter [mm]	25		
Outsider diameter [mm]	47,5		

GOM-128	Bar stabilizing Bushings	NISSAN	54613-32G00
Assembly side	Front	NISSAN	PICK UP/KING CAB (D21) 2.0/2.3 D/2.4 i/2.5 D/2.7 D/3.0 i V6
Length [mm]	47	NISSAN	TERRANO I (WD21) 2.4 i 4WD/2.7 TD/3.0 i
Width [mm]	33	NISSAN	TERRANO II (R20) 2.4 /2.7 TD/3.0 Di
Height [mm]	35,5		
Inner diameter [mm]	20		

GOM-130	Bushings spring	NISSAN	55046-01600
Assembly side	Front	NISSAN	PATROL GR I (Y60) 2.8 TD/4.2/4.2 D/
Length [mm]	36,5	NISSAN	PATROL GR II (Y61) 2.8 TD/3.0 DTi/4.2 TD/4.5 i
Inner diameter [mm]	20	NISSAN	PATROL Hardtop (K160) 2.8/3.2 TD/3.3 D
Outsider diameter [mm]	32	NISSAN	PATROL Hardtop (K260) 2.8/2.8 TD/3.2 D
		NISSAN	PATROL Station Wagon (W160) 2.8/3.2 TD/3.3 D
		NISSAN	PATROL Station Wagon (W260) 2.8 TD/3.2 D

GOM-131	Silentblock spring	NISSAN	55045-07200
Assembly side	Rear	NISSAN	PATROL GR I (Y60) 2.8 TD/4.2/4.2 D/
Length [mm]	64,5	NISSAN	PATROL GR II (Y61) 2.8 TD/3.0 DTi/4.2 TD/4.5 i
Inner diameter [mm]	16	NISSAN	PATROL Hardtop (K160) 2.8/3.2 TD/3.3 D
Outsider diameter [mm]	33,2	NISSAN	PATROL Hardtop (K260) 2.8/2.8 TD/3.2 D
		NISSAN	PATROL Station Wagon (W160) 2.8/3.2 TD/3.3 D
		NISSAN	PATROL Station Wagon (W260) 2.8 TD/3.2 D

GOM-132	Bar stabilizing Bushings	NISSAN	20638-61500
Assembly side	Front	NISSAN	PATROL GR I (Y60) 2.8 TD/4.2/4.2 D/
Length [mm]	15	NISSAN	PATROL GR II (Y61) 2.8 TD/3.0 DTi/4.2 TD/4.5 i
Inner diameter [mm]	10	NISSAN	PATROL Hardtop (K160) 2.8/3.2 TD/3.3 D
Outsider diameter [mm]	30	NISSAN	PATROL Hardtop (K260) 2.8/2.8 TD/3.2 D
		NISSAN	PATROL Station Wagon (W160) 2.8/3.2 TD/3.3 D
		NISSAN	PATROL Station Wagon (W260) 2.8 TD/3.2 D
		NISSAN	PICK UP/KING CAB (720) 1.8/2.2/2.2 D/2.3 D/2.5 D
		NISSAN	PICK UP/KING CAB (D21) 2.0/2.3 D/2.4 i/2.5 D/2.7 D/3.0 i V6
		NISSAN	PICK UP/KING CAB/NAVARA (D22) 2.4 i/2.5 D/2.5 TD/3.2 D
		NISSAN	TERRANO I (WD21) 2.4 i 4WD/2.7 TD/3.0 i
		NISSAN	TERRANO II (R20) 2.4 /2.7 TD/3.0 Di

GOM-134	Silentblock spring	NISSAN	55045-31000
Assembly side	Front	NISSAN	PATROL GR I (Y60) 2.8 TD/4.2/4.2 D/
Length [mm]	70	NISSAN	PATROL GR II (Y61) 2.8 TD/3.0 DTi/4.2 TD/4.5 i
Inner diameter [mm]	18	NISSAN	PATROL Hardtop (K160) 2.8/3.2 TD/3.3 D
Outsider diameter [mm]	40	NISSAN	PATROL Hardtop (K260) 2.8/2.8 TD/3.2 D
		NISSAN	PATROL Station Wagon (W160) 2.8/3.2 TD/3.3 D
		NISSAN	PATROL Station Wagon (W260) 2.8 TD/3.2 D

GOM-136	Bar stabilizing Bushings		
Assembly side	Front	NISSAN	PATROL Hardtop (K160) 2.8/3.2 TD/3.3 D
Length [mm]	37	NISSAN	PATROL Hardtop (K260) 2.8/2.8 TD
Width [mm]	33	NISSAN	PATROL Station Wagon (W160) 2.8/3.2 TD/3.3 D
Inner diameter [mm]	20	NISSAN	PATROL Station Wagon (W260) 2.8 TD

GOM-137	Bushings spring		
Assembly side	Rear	NISSAN	PATROL Hardtop (K160) 2.8/3.2 TD/3.3 D
Length [mm]	37	NISSAN	PATROL Hardtop (K260) 2.8/2.8 TD
Width [mm]	33	NISSAN	PATROL Station Wagon (W160) 2.8/3.2 TD/3.3 D
Inner diameter [mm]	18	NISSAN	PATROL Station Wagon (W260) 2.8 TD

GOM-200	Engine Support	TOYOTA	12361-60022
Assembly side	Front	TOYOTA	LAND CRUISER (_J4_) 3.0 D/3.4 D/3.6 D/3.6 L/3.9/4.0 D /4.2
Length [mm]	110	TOYOTA	LAND CRUISER (_J6_) 3.4 D/4.0/4.0 D/4.0 TD/4.2
Width [mm]	77	TOYOTA	LAND CRUISER (_J7_) 2.4/2.4 D/2.4 TD/3.0 TD/3.4 D/3.4 TD/3.5 D/4.2 TD
Height [mm]	46	TOYOTA	LAND CRUISER Pick-up (_J4_) 3.4 D/3.6 D/3.9/4.0 D/4.2

GOM-201	Engine Support	TOYOTA	12371-68010
Assembly side	Rear	TOYOTA	LAND CRUISER (_J4_) 3.0 D/3.4 D/3.6 D/3.6 L/3.9/4.0 D /4.2
Length [mm]	280	TOYOTA	LAND CRUISER (_J6_) 3.4 D/4.0/4.0 D/4.0 TD/4.2
Width [mm]	131	TOYOTA	LAND CRUISER (_J7_) 2.4/2.4 D/2.4 TD/3.0 TD/3.4 D/3.4 TD/3.5 D/4.2 TD
Height [mm]	47	TOYOTA	LAND CRUISER Pick-up (_J4_) 3.4 D/3.6 D/3.9/4.0 D/4.2

O.E.M. names and numbers are used for reference purposes only Ashika assumes no responsibility for possible errors

GOM-202	Engine Support	TOYOTA	12361-54120
Assembly side	Front	TOYOTA	12361-54121
Length [mm]	122	TOYOTA	4 RUNNER (_N130) 2.4/2.4 TD/2.7 i/3.0 TD/3.0 V6/3.4 i
Width [mm]	122	TOYOTA	HILUX Pick-up (N) 1.6/1.8/2.0/2.2/2.2 D/2.4 D/2.4 i/2.4 TD/2.5 D-4D/2.8 D
Height [mm]	46	TOYOTA	LAND CRUISER (_J7_) 2.4 D/2.4 TD

GOM-203	Support	TOYOTA	37230-35050
Specification	Shaft	TOYOTA	4 RUNNER (_N130) 2.4/2.4 TD/2.7 i/3.0 TD/3.0 V6/3.4 i
Length [mm]	177	TOYOTA	HILUX Pick-up (N) 1.6/1.8/2.0/2.2/2.2 D/2.4 D/2.4 i/2.4 TD/2.5 D-4D/2.8 D
Width [mm]	60		
Height [mm]	106		
Inner diameter [mm]	30		

GOM-204	Support	TOYOTA	37230-35080
Specification	Shaft	TOYOTA	4 RUNNER (_N130) 2.4/2.4 TD/2.7 i/3.0 TD/3.0 V6/3.4 i
Length [mm]	285	TOYOTA	HILUX Pick-up (N) 1.6/1.8/2.0/2.2/2.2 D/2.4 D/2.4 i/2.4 TD/2.5 D-4D/2.8 D
Width [mm]	60		
Height [mm]	120		
Inner diameter [mm]	30		

GOM-205	Bushings spring	TOYOTA	90385-18009
Assembly side	Rear	TOYOTA	LAND CRUISER (_J4_) 3.0 D/3.4 D/3.6 D/3.6 L/3.9/4.0 D/4.2
Length [mm]	44	TOYOTA	LAND CRUISER (_J6_) 3.4 Diesel/4.0/4.0 D/4.0 TD/4.2
Inner diameter [mm]	18	TOYOTA	LAND CRUISER (_J7_) 2.4/2.4 D/2.4 TD/3.0 TD/3.4 D/3.4 TD/3.5 D/4.2 TD
Outsider diameter [mm]	40	TOYOTA	LAND CRUISER 80 (_J8_) 4.0 (FJ80_)/4.2 D/4.2 TD/4.5 24V
		TOYOTA	LAND CRUISER 90 (_J9_) 3.0 D-4D/3.0 TD/3.4 i 24V
		TOYOTA	LAND CRUISER Hardtop (_J7_) 2.4 TD (LJ77)/3.0 TD
		TOYOTA	LAND CRUISER Pick-up (_J4_) 3.4 D (BJ45_P)/3.6 D/3.9/4.0 D/4.2

GOM-206	Bushings spring	TOYOTA	90389-18002
Assembly side	Rear	TOYOTA	LAND CRUISER (_J4_) 3.0 D/3.4 D/3.6 D/3.6 L/3.9/4.0 D/4.2
Length [mm]	45	TOYOTA	LAND CRUISER (_J6_) 3.4 Diesel/4.0/4.0 D/4.0 TD/4.2
Inner diameter [mm]	18	TOYOTA	LAND CRUISER (_J7_) 2.4/2.4 D/2.4 TD/3.0 TD/3.4 D/3.4 TD/3.5 D/4.2 TD
Outsider diameter [mm]	35	TOYOTA	LAND CRUISER 80 (_J8_) 4.0 (FJ80_)/4.2 D/4.2 TD/4.5 24V
		TOYOTA	LAND CRUISER 90 (_J9_) 3.0 D-4D/3.0 TD/3.4 i 24V
		TOYOTA	LAND CRUISER Hardtop (_J7_) 2.4 TD (LJ77)/3.0 TD
		TOYOTA	LAND CRUISER Pick-up (_J4_) 3.4 D (BJ45_P)/3.6 D/3.9/4.0 D/4.2

GOM-207	Bar stabilizing Bushings	TOYOTA	48815-60010
Assembly side	Front	TOYOTA	LAND CRUISER (_J4_) 3.0 D/3.4 D/3.6 D/3.6 L/3.9/4.0 D/4.2
Length [mm]	40,5	TOYOTA	LAND CRUISER (_J6_) 3.4 Diesel/4.0/4.0 D/4.0 TD/4.2
Width [mm]	41	TOYOTA	LAND CRUISER (_J7_) 2.4/2.4 D/2.4 TD/3.0 TD/3.4 D/3.4 TD/3.5 D/4.2 TD
Height [mm]	40	TOYOTA	LAND CRUISER 80 (_J8_) 4.0 (FJ80_)/4.2 D/4.2 TD/4.5 24V
Inner diameter [mm]	20	TOYOTA	LAND CRUISER 90 (_J9_) 3.0 D-4D/3.0 TD/3.4 i 24V
		TOYOTA	LAND CRUISER Hardtop (_J7_) 2.4 TD (LJ77)/3.0 TD
		TOYOTA	LAND CRUISER Pick-up (_J4_) 3.4 D (BJ45_P)/3.6 D/3.9/4.0 D/4.2

GOM-208	Bar stabilizing Bushings	TOYOTA	48817-30010
Assembly side	Front	TOYOTA	COROLLA (_E7_) 1.3 (KE70)/1.6/1.8 D
Length [mm]	21	TOYOTA	HILUX Pick-up (_N_) 2.4 D/2.4 TD
Inner diameter [mm]	8	TOYOTA	LAND CRUISER (J12) 3.0 D-4D/4.0
Outsider diameter [mm]	27	TOYOTA	LAND CRUISER (_J4_) 3.0 D/3.4 D/3.6 D/3.6 L/3.9/4.0 D/4.2
		TOYOTA	LAND CRUISER (_J6_) 3.4 Diesel/4.0/4.0 D/4.0 TD/4.2
		TOYOTA	LAND CRUISER (_J7_) 2.4/2.4 D/2.4 TD/3.0 TD/3.4 D/3.4 TD/3.5 D/4.2 TD
		TOYOTA	LAND CRUISER 80 (_J8_) 4.0 (FJ80_)/4.2 D/4.2 TD/4.5 24V
		TOYOTA	LAND CRUISER 90 (_J9_) 3.0 D-4D/3.0 TD/3.4 i 24V
		TOYOTA	LAND CRUISER Hardtop (_J7_) 2.4 TD (LJ77)/3.0 TD
		TOYOTA	LAND CRUISER Pick-up (_J4_) 3.4 D (BJ45_P)/3.6 D/3.9/4.0 D/4.2

GOM-210	Silentblock Track Control Arm	TOYOTA	48654-35010
Assembly side	Lower	TOYOTA	4 RUNNER (_N130) 2.4 (RN61)/2.4 TD/2.7 i/3.0 TD/3.0 V6/3.4 i
Length [mm]	92,5	TOYOTA	HILUX Pick-up (N) 1.6/1.8/2.0/2.2/2.2 D/2.4 D/2.4 i/2.4 TD/2.5 D-4D/2.8 D
Inner diameter [mm]	18		
Outsider diameter [mm]	40		

GOM-211	Silentblock Track Control Arm	TOYOTA	48632-30020
Assembly side	Upper	TOYOTA	4 RUNNER (_N130) 2.4 (RN61)/2.4 TD/2.7 i/3.0 TD/3.0 V6/3.4 i
Length [mm]	44,5	TOYOTA	HILUX Pick-up (N) 1.6/1.8/2.0/2.2/2.2 D/2.4 D/2.4 i/2.4 TD/2.5 D-4D/2.8 D
Inner diameter [mm]	18		
Outsider diameter [mm]	36,4		

GOM-212	Bushings spring	TOYOTA	90385-18046
Assembly side	Front/Rear	TOYOTA	4 RUNNER (_N130) 2.4 (RN61)/2.4 TD/2.7 i/3.0 TD/3.0 V6/3.4 i
Length [mm]	34	TOYOTA	HILUX Pick-up (_N_) 2.4 D
Inner diameter [mm]	17		
Outsider diameter [mm]	29		

GOM-213	Bushings spring	TOYOTA	90385-18007
Assembly side	Front	TOYOTA	4 RUNNER (_N130) 2.4 (RN61)
Length [mm]	55	TOYOTA	4 RUNNER (_N130) 2.4 TD (LN130)
Inner diameter [mm]	18	TOYOTA	4 RUNNER (_N130) 2.7 i
Outsider diameter [mm]	30	TOYOTA	4 RUNNER (_N130) 3.0 Turbo-D (KZN 130)
		TOYOTA	4 RUNNER (_N130) 3.0 V6 (VZN 130)
		TOYOTA	4 RUNNER (_N130) 3.4 i
		TOYOTA	4 RUNNER 3.0 Turbo-D

GOM-214	Bar stabilizing Bushings	TOYOTA	48815-20020
Assembly side	Front	TOYOTA	4 RUNNER (_N130) 2.4 (RN61)/2.4 TD/2.7 i/3.0 TD/3.0 V6/3.4 i
Length [mm]	40	TOYOTA	HILUX Pick-up (_N_) 2.4 D
Width [mm]	31		
Height [mm]	32		
Inner diameter [mm]	16		

GOM-215	Bar stabilizing Bushings	TOYOTA	48815-20030
Assembly side	Front	TOYOTA	4 RUNNER (_N130) 2.4 (RN61)/2.4 TD/2.7 i/3.0 TD/3.0 V6/3.4 i
Length [mm]	39	TOYOTA	HILUX Pick-up (_N_) 2.4 D
Width [mm]	30		
Height [mm]	31		
Inner diameter [mm]	18		

O.E.M. names and numbers are used for reference purposes only Ashika assumes no responsibility for possible errors

GOM-216	Bar stabilizing Bushings	TOYOTA	90948-01002
Assembly side	Front	TOYOTA	4 RUNNER (_N130) 2.4 (RN61)/2.4 TD/2.7 i/3.0 TD/3.0 V6/3.4 i
Length [mm]	16	TOYOTA	HILUX Pick-up (_N_) 2.4 D
Inner diameter [mm]	10		
Outsider diameter [mm]	25		

GOM-217	Silentblock Track Control Arm	TOYOTA	48655-20050RH
Assembly side	Front Right	TOYOTA	CORONA (RX, RT) 1.8 (TT1)
Length [mm]	145	TOYOTA	CORONA (RX, RT) 2.0 (RT104)
Width [mm]	77	TOYOTA	CORONA (RX, RT) 2.0 Mark II (RX12)
Height [mm]	57	TOYOTA	CORONA Station wagon (RT118) 2.0
Inner diameter [mm]	20		

GOM-218	Silentblock Track Control Arm	TOYOTA	48655-20060LH
Assembly side	Front Left	TOYOTA	CORONA (RX, RT) 1.8 (TT1)
Length [mm]	148	TOYOTA	CORONA (RX, RT) 2.0 (RT104)
Width [mm]	81	TOYOTA	CORONA (RX, RT) 2.0 Mark II (RX12)
Height [mm]	57	TOYOTA	CORONA Station wagon (RT118) 2.0
Inner diameter [mm]	18		

GOM-219	Bar stabilizing Bushings	TOYOTA	48815-30050
Length [mm]	40	TOYOTA	LAND CRUISER (_J7_) 2.4 D (LJ70_)/2.4 TD/3.0 TD/3.4 D/3.4 TD/3.5 D/4.2 TD
Width [mm]	31	TOYOTA	LAND CRUISER Hardtop (_J7_) 2.4 TD (LJ77)/3.0 TD
Height [mm]	32		
Inner diameter [mm]	18		

GOM-220	Bar stabilizing Bushings	TOYOTA	48815-10060
Assembly side	Front	TOYOTA	HILUX Pick-up (_N_) 1.8/2.0/2.2/2.4 D/2.4 i/2.4 TD/2.5 D-4D
Length [mm]	43	TOYOTA	RAV 4 I/ FUNCRUISER (SXA1_) 2.0 16V 4WD
Width [mm]	31	TOYOTA	RAV 4 II 1.8/2.4/2.0 D-4D/2.0 VVTi
Height [mm]	39		
Inner diameter [mm]	22		

GOM-221	Bar stabilizing Bushings	TOYOTA	90385-23037
Length [mm]	43	TOYOTA	COASTER 4.1 D Autobus
Inner diameter [mm]	22	TOYOTA	DYNA (4Y) 2.0/ 2.2/2.8 D/2.7 i
Outsider diameter [mm]	40	TOYOTA	DYNA 100 (2Y) 1.8 (YY100)/2.4 D
		TOYOTA	DYNA 150 (3L/5L) 2.8 D (LY211/LY212)/3.4 D
		TOYOTA	DYNA 200 (Diesel) 3.4 D (BU79/89)/3.7 D
		TOYOTA	DYNA Autobus 2.4 D/3.4 D
		TOYOTA	DYNA D (2L) 2.8 D (LY100)/4.1 D/4.1 TD/3.0 D/3.4 D
		TOYOTA	DYNA Flatcar/Chassis 2.0/2.4 D/3.4 D

GOM-222	Bushings spring	TOYOTA	90385-18009
Length [mm]	44	TOYOTA	LAND CRUISER (_J7_) 3.5 D
Inner diameter [mm]	18	TOYOTA	LAND CRUISER (_J7_) 4.2 TD (HZJ7__V)
Outsider diameter [mm]	40	TOYOTA	LAND CRUISER Hardtop (_J7_) 3.0 TD

GOM-223	Bushings spring	TOYOTA	48674-60010
Length [mm]	40	TOYOTA	LAND CRUISER (_J7_) 2.4 D (LJ70_)/2.4 TD/3.0 TD/3.4 D/3.4 TD/3.5 D/4.2 TD
Inner diameter [mm]	25	TOYOTA	LAND CRUISER Hardtop (_J7_) 2.4 TD (LJ77)
Outsider diameter [mm]	37	TOYOTA	LAND CRUISER Hardtop (_J7_) 3.0 TD
		TOYOTA	LAND CRUISER (_J7_) 2.4 D (LJ70_)
		TOYOTA	LAND CRUISER (_J7_) 2.4 TD (LJ70_, LJ73_)

GOM-224	Bar stabilizing Bushings		
Length [mm]	40	TOYOTA	LAND CRUISER (_J7_) 2.4 D (LJ70_)
Width [mm]	32	TOYOTA	LAND CRUISER (_J7_) 2.4 TD (LJ70_, LJ73_)
Inner diameter [mm]	22,5		

GOM-225	Bar stabilizing Bushings		
Length [mm]	21	TOYOTA	LAND CRUISER (_J7_) 2.4 D (LJ70_)
Width [mm]	26,5	TOYOTA	LAND CRUISER (_J7_) 2.4 TD (LJ70_, LJ73_)
Inner diameter [mm]	8		

GOM-261	Support	TOYOTA	37230-35090
Specification	Shaft	TOYOTA	4 RUNNER (_N130) 2.4 (RN61)/2.4 TD/2.7 i/3.0 TD/3.0 V6/3.4 i
Length [mm]	177	TOYOTA	HILUX Pick-up (N) 1.6/1.8/2.0/2.2/2.2 D/2.4 D/2.4 i/2.4 TD/2.5 D-4D/2.8 D
Width [mm]	60		
Height [mm]	106		
Inner diameter [mm]	30		

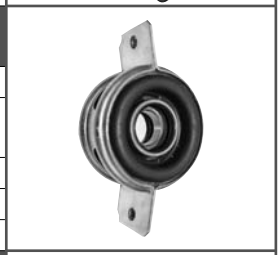

GOM-400	Engine Support	HONDA	50841-SR3-030
Assembly side	Front Left	HONDA	CIVIC IV (EG, EH) 1.3/1.4 i/1.5 i 16V/1.6 i/
Length [mm]	145	HONDA	CIVIC V (EJ9, EK3/4) 1.4 i /1.5 i/1.6 i/1.8/2.0/
Width [mm]	49	HONDA	CRX III (EH, EG) 1.6 ESi (EH6)
Height [mm]	80	HONDA	CRX III (EH, EG) 1.6 i VTi (EG2)
Inner diameter [mm]	20		

GOM-401	Engine Support	HONDA	50842-SR3-030
Assembly side	Front Right	HONDA	CIVIC IV (EG, EH) 1.3/1.4 i/1.5 i 16V/1.6 i/
Length [mm]	145	HONDA	CIVIC V (EJ9, EK3/4) 1.4 i /1.5 i/1.6 i/1.8/2.0/
Width [mm]	58	HONDA	CRX III (EH, EG) 1.6 ESi (EH6)
Height [mm]	80	HONDA	CRX III (EH, EG) 1.6 i VTi (EG2)
Inner diameter [mm]	20		

GOM-402	Engine Support	HONDA	50810-SM4-000
Assembly side	Rear	HONDA	50810-SR3-010
Length [mm]	139	HONDA	CIVIC IV (EG, EH) 1.5 i 16V (EG8)/1.6
Width [mm]	104	HONDA	CIVIC IV Coupe (EJ) 1.5 i LSi (EJ2)/1.6 i
Height [mm]	88	HONDA	CIVIC IV Fastback (MA, MB) 1.4 i (MA8)/1.5 i/1.6 i
Inner diameter [mm]	12	HONDA	CIVIC IV Hatchback (EG) 1.3 16V (EG3)/1.5 i/1.6

GOM-403	Shift Support	HONDA	50820-SR3-J02
Length [mm]	137	HONDA	CIVIC IV (EG, EH) 1.5 i 16V (EG8)/1.6
Width [mm]	93	HONDA	CIVIC IV Coupe (EJ) 1.5 i LSi (EJ2)/1.6 i
Height [mm]	106	HONDA	CIVIC IV Fastback (MA, MB) 1.4 i (MA8)/1.5 i/1.6 i
Inner diameter [mm]	12	HONDA	CIVIC IV Hatchback (EG) 1.3 16V (EG3)/1.5 i/1.6

GOM-405	Engine Support	HONDA	50820-SR3-J11
Assembly side	Front	HONDA	CIVIC IV (EG, EH) 1.5 i 16V (EG8)/1.6
Length [mm]	134	HONDA	CIVIC IV Coupe (EJ) 1.5 i LSi (EJ2)/1.6 i
Width [mm]	85,5	HONDA	CIVIC IV Fastback (MA, MB) 1.4 i (MA8)/1.5 i/1.6 i
Height [mm]	103	HONDA	CIVIC IV Hatchback (EG) 1.3 16V (EG3)/1.5 i/1.6
Inner diameter [mm]	12		

GOM-405	Engine Support	HONDA	50805-SR3-951
Assembly side	Rear	HONDA	CIVIC I (SL) 1.3 L/1.2
Length [mm]	124	HONDA	CIVIC II 1.2/1.3/1.5
Width [mm]	118	HONDA	CIVIC III Hatchback (EC, ED, EE) 1.3/1.4/1.5 i/1.6 i
Height [mm]	128	HONDA	CIVIC IV (EG, EH) 1.5 i 16V (EG8)/1.6 i/1.4 i/1.3 16V
Inner diameter [mm]	12	HONDA	CIVIC Shuttle I (AN, AR) 1.5 (AN)
		HONDA	CIVIC Shuttle II (EE) 1.4 i 16V (EE1)/1.5 i/1.6 i
		HONDA	CIVIC V (EJ9, EK3/4) 1.4 i (EJ9)/1.5 i/1.6 i/1.8 16V/2.0 i

O.E.M. names and numbers are used for reference purposes only Ashika assumes no responsibility for possible errors

GOM-407	Shift Support	HONDA	50820-SR3-J11
Inner diameter [mm]	12	HONDA	CIVIC IV (EG, EH) 1.5 i 16V (EG8)/1.6
Height [mm]	115	HONDA	CIVIC IV Coupe (EJ) 1.5 i LSi (EJ2)/1.6 i
Width [mm]	93	HONDA	CIVIC IV Fastback (MA, MB) 1.4 i (MA8)/1.5 i/1.6 i
Length [mm]	132	HONDA	CIVIC IV Hatchback (EG) 1.3 16V (EG3)/1.5 i/1.6

GOM-409	Silentblock Track Control Arm	HONDA	51392-SR3-004
Inner diameter [mm]	12	HONDA	CIVIC I (SL) 1.3 L/1.2
Outsider diameter [mm]	37	HONDA	CIVIC II 1.2/1.3/1.5
Length [mm]	50	HONDA	CIVIC III Hatchback (EC, ED, EE) 1.3/1.4/1.5 i/1.6 i
		HONDA	CIVIC Shuttle II (EE) 1.4 i 16V (EE1)/1.5 i/1.6 i

GOM-410	Silentblock Track Control Arm	HONDA	51395-SR3-N02
Assembly side	Lower SX	HONDA	CIVIC I (SL) 1.3 L/1.2
Inner diameter [mm]	18	HONDA	CIVIC II 1.2/1.3/1.5
Height [mm]	73	HONDA	CIVIC III Hatchback (EC, ED, EE) 1.3/1.4/1.5 i/1.6 i
Width [mm]	86,5	HONDA	CIVIC IV (EG, EH) 1.5 i 16V (EG8)/1.6
Length [mm]	155	HONDA	CIVIC IV Coupe (EJ) 1.5 i LSi (EJ2)/1.6 i
		HONDA	CIVIC IV Fastback (MA, MB) 1.4 i (MA8)/1.5 i/1.6 i
		HONDA	CIVIC IV Hatchback (EG) 1.3 16V (EG3)/1.5 i/1.6
		HONDA	CIVIC Shuttle I (AN, AR) 1.5 (AN)
		HONDA	CIVIC Shuttle II (EE) 1.4 i 16V (EE1)/1.5 i/1.6 i
		HONDA	CIVIC V (EJ9, EK3/4) 1.4 i (EJ9)/1.5 i/1.6 i/1.8 16V/2.0 i

GOM-411	Silentblock Track Control Arm	HONDA	51396-SR3-N02
Assembly side	Lower DX	HONDA	CIVIC I (SL) 1.3 L/1.2
Inner diameter [mm]	18,5	HONDA	CIVIC II 1.2/1.3/1.5
Height [mm]	58	HONDA	CIVIC III Hatchback (EC, ED, EE) 1.3/1.4/1.5 i/1.6 i
Total Length [mm]	161	HONDA	CIVIC IV (EG, EH) 1.5 i 16V (EG8)/1.6
Width [mm]	73	HONDA	CIVIC IV Coupe (EJ) 1.5 i LSi (EJ2)/1.6 i
		HONDA	CIVIC IV Fastback (MA, MB) 1.4 i (MA8)/1.5 i/1.6 i
		HONDA	CIVIC IV Hatchback (EG) 1.3 16V (EG3)/1.5 i/1.6
		HONDA	CIVIC Shuttle I (AN, AR) 1.5 (AN)
		HONDA	CIVIC Shuttle II (EE) 1.4 i 16V (EE1)/1.5 i/1.6 i
		HONDA	CIVIC V (EJ9, EK3/4) 1.4 i (EJ9)/1.5 i/1.6 i/1.8 16V/2.0 i

GOM-500	Support	MITSUBISHI	MB154199
Specification	Shaft	HYUNDAI	GALLOPER I 2.5 TD/3.0 V6
Width [mm]	58	HYUNDAI	GALLOPER II (JK-01) 2.5 TCI/2.5 TD/3.0 V6
Height [mm]	115	MITSUBISHI	L 200 (K__T) 1.6 K11 (AG32)/2.0/2.4/2.5 D/2.5 TD/2.6 4WD
Inner diameter [mm]	30	MITSUBISHI	PAJERO I (L04_G, L14_G) 2.0 4WD/2.6/ 2.3 TD/2.5 TD/3.0 V6
Distance of holes fixation [mm]	160	MITSUBISHI	PAJERO II (V2_W, V4_W) 1.8 GDI/2.4/2.5 TD/2.8 TD/3.0 V6/3.5 V6
		MITSUBISHI	PAJERO III (V60) 3.2 DI-D (V68W, V78W)
		MITSUBISHI	PAJERO PININ (H6_W, H7_W) 1.8/1.8 GDI/2.0 GDI
		MITSUBISHI	PAJERO SPORT (K90) 2.5 TD/3.0 V6

GOM-501	Engine Support	MITSUBISHI	MB007023
Length [mm]	119	HYUNDAI	GALLOPER I 2.5 TD/3.0 V6
Width [mm]	126	HYUNDAI	GALLOPER II (JK-01) 2.5 TCI/2.5 TD/3.0 V6
Height [mm]	57	MITSUBISHI	L 200 (K__T) 1.6 K11 (AG32)/2.0/2.4/2.5 D/2.5 TD/2.6 4WD
		MITSUBISHI	PAJERO CLASSIC (V2_W) 2.5 TD
		MITSUBISHI	PAJERO I (L04_G, L14_G) 2.0 4WD/2.6/ 2.3 TD/2.5 TD/3.0 V6
		MITSUBISHI	PAJERO II (V2_W, V4_W) 1.8 GDI/2.4/2.5 TD/2.8 TD/3.0 V6/3.5 V6
		MITSUBISHI	PAJERO III (V60) 3.2 DI-D/3.5 V6 GDI
		MITSUBISHI	PAJERO PININ (H6_W, H7_W) 1.8/1.8 GDI/2.0 GDI
		MITSUBISHI	PAJERO SPORT (K90) 2.5 TD/3.0 V6

GOM-502	Engine Support	MITSUBISHI	MB436444
Length [mm]	128	HYUNDAI	GALLOPER I 2.5 TD intercooler
Width [mm]	124	HYUNDAI	GALLOPER II (JK-01) 2.5 TD intercooler
Height [mm]	72	MITSUBISHI	PAJERO SPORT (K90) 2.5 TD

GOM-503	Shift Support	MITSUBISHI	MB260676
Inner diameter [mm]	25	MITSUBISHI	L 200 (K__T) 1.6 K11 (AG32)/2.0/2.5 D/2.5 D 4WD
Height [mm]	30,3	MITSUBISHI	PAJERO I (L04_G, L14_G) 2.5 TD (L044G, L049G)
Width [mm]	49	MITSUBISHI	PAJERO I (L04_G, L14_G) 3.0 V6 (L141G, L146G)
Length [mm]	80	MITSUBISHI	PAJERO I Open off-roader (L04_G) 2.3 TD (L043G, L048G)/2.6

GOM-504	Shift Support	MITSUBISHI	MB581845
Length [mm]	82	HYUNDAI	GALLOPER I 2.5 TD/3.0 V6
Width [mm]	55	HYUNDAI	GALLOPER II (JK-01) 2.5 TCI/2.5 TD/3.0 V6
Height [mm]	48	MITSUBISHI	L 200 (K__T) 1.6 K11 (AG32)/2.4/2.5 D/2.5 TD/2.6 4WD
Inner diameter [mm]	11	MITSUBISHI	PAJERO CLASSIC (V2_W) 2.5 TD
		MITSUBISHI	PAJERO I (L04_G, L14_G) 2.0 4WD/2.6/ 2.3 TD/2.5 TD/3.0 V6
		MITSUBISHI	PAJERO II (V2_W, V4_W) 1.8 GDI/2.4/2.5 TD/2.8 TD/3.0 V6/3.5 V6
		MITSUBISHI	PAJERO III (V60) 3.2 DI-D/3.5 V6 GDI
		MITSUBISHI	PAJERO PININ (H6_W, H7_W) 1.8/1.8 GDI/2.0 GDI
		MITSUBISHI	PAJERO SPORT (K90) 2.5 TD/3.0 V6

GOM-505	Silentblock Track Control Arm	MITSUBISHI	MB109662
Assembly side	Lower	HYUNDAI	GALLOPER I 2.5 TD/3.0 V6
Length [mm]	89,2	HYUNDAI	GALLOPER II (JK-01) 2.5 TCI/2.5 TD/3.0 V6
Inner diameter [mm]	19	MITSUBISHI	L 200 (K__T) 1.6 K11 (AG32)/2.0/2.4/2.5 D/2.5 TD/2.6 4WD
Outsider diameter [mm]	40	MITSUBISHI	PAJERO CLASSIC (V2_W) 2.5 TD/3.2 DI-D
		MITSUBISHI	PAJERO I (L04_G, L14_G) 2.0 4WD/2.6/ 2.3 TD/2.5 TD/3.0 V6
		MITSUBISHI	PAJERO II (V2_W, V4_W) 1.8 GDI/2.4/2.5 TD/2.8 TD/3.0 V6/3.5 V6
		MITSUBISHI	PAJERO PININ (H6_W, H7_W) 1.8/1.8 GDI/2.0 GDI
		MITSUBISHI	PAJERO SPORT (K90) 2.5 TD/3.0 V6

GOM-506	Silentblock Track Control Arm	MITSUBISHI	MB109684
Assembly side	Upper	HYUNDAI	GALLOPER I 2.5 TD/3.0 V6
Length [mm]	64	HYUNDAI	GALLOPER II (JK-01) 2.5 TCI/2.5 TD/3.0 V6
Inner diameter [mm]	14,5	MITSUBISHI	L 200 (K__T) 1.6 K11 (AG32)/2.0/2.4/2.5 D/2.5 TD/2.6 4WD
Outsider diameter [mm]	39,4	MITSUBISHI	PAJERO CLASSIC (V2_W) 2.5 TD/3.2 DI-D
		MITSUBISHI	PAJERO I (L04_G, L14_G) 2.0 4WD/2.6/ 2.3 TD/2.5 TD/3.0 V6
		MITSUBISHI	PAJERO II (V2_W, V4_W) 1.8 GDI/2.4/2.5 TD/2.8 TD/3.0 V6/3.5 V6
		MITSUBISHI	PAJERO PININ (H6_W, H7_W) 1.8/1.8 GDI/2.0 GDI
		MITSUBISHI	PAJERO SPORT (K90) 2.5 TD/3.0 V6

GOM-507	Bar stabilizing Bushings	MITSUBISHI	MB175804
Assembly side	Front	HYUNDAI	GALLOPER I 2.5 TD/3.0 V6
Inner diameter [mm]	23	HYUNDAI	GALLOPER II (JK-01) 2.5 TCI/2.5 TD/3.0 V6
Height [mm]	35	MITSUBISHI	L 200 (K__T) 1.6 K11 (AG32)/2.4/2.5 D/2.5 TD/2.6 4WD
Width [mm]	35	MITSUBISHI	PAJERO CLASSIC (V2_W) 2.5 TD
Length [mm]	40	MITSUBISHI	PAJERO I (L04_G, L14_G) 2.0 4WD/2.6/ 2.3 TD/2.5 TD/3.0 V6
		MITSUBISHI	PAJERO II (V2_W, V4_W) 1.8 GDI/2.4/2.5 TD/2.8 TD/3.0 V6/3.5 V6
		MITSUBISHI	PAJERO III (V60) 3.2 DI-D/3.5 V6 GDI
		MITSUBISHI	PAJERO PININ (H6_W, H7_W) 1.8/1.8 GDI/2.0 GDI
		MITSUBISHI	PAJERO SPORT (K90) 2.5 TD/3.0 V6

O.E.M. names and numbers are used for reference purposes only Ashika assumes no responsibility for possible errors

GOM-508	Bar stabilizing Bushings	MITSUBISHI	MB573784
Assembly side	Front	HYUNDAI	GALLOPER I 2.5 TD/3.0 V6
Length [mm]	39	HYUNDAI	GALLOPER II (JK-01) 2.5 TCI/2.5 TD/3.0 V6
Width [mm]	42	MITSUBISHI	L 200 (K__T) 1.6 K11 (AG32)/2.4/2.5 D/2.5 TD/2.6 4WD
Height [mm]	42	MITSUBISHI	PAJERO CLASSIC (V2_W) 2.5 TD
Inner diameter [mm]	24	MITSUBISHI	PAJERO I (L04_G, L14_G) 2.0 4WD/2.6/ 2.3 TD/2.5 TD/3.0 V6
		MITSUBISHI	PAJERO II (V2_W, V4_W) 1.8 GDI/2.4/2.5 TD/2.8 TD/3.0 V6/3.5 V6
		MITSUBISHI	PAJERO III (V60) 3.2 DI-D/3.5 V6 GDI
		MITSUBISHI	PAJERO PININ (H6_W, H7_W) 1.8/1.8 GDI/2.0 GDI
		MITSUBISHI	PAJERO SPORT (K90) 2.5 TD/3.0 V6

GOM-509	Bar stabilizing Bushings	MITSUBISHI	MB598097
Assembly side	Side	HYUNDAI	GALLOPER I 2.5 TD/3.0 V6
Diameter [mm]	25	HYUNDAI	GALLOPER II (JK-01) 2.5 TCI/2.5 TD/3.0 V6
		MITSUBISHI	L 200 (K__T) 1.6 K11 (AG32)/2.4/2.5 D/2.5 TD/2.6 4WD
		MITSUBISHI	PAJERO CLASSIC (V2_W) 2.5 TD
		MITSUBISHI	PAJERO I (L04_G, L14_G) 2.0 4WD/2.6/ 2.3 TD/2.5 TD/3.0 V6
		MITSUBISHI	PAJERO II (V2_W, V4_W) 1.8 GDI/2.4/2.5 TD/2.8 TD/3.0 V6/3.5 V6
		MITSUBISHI	PAJERO III (V60) 3.2 DI-D/3.5 V6 GDI
		MITSUBISHI	PAJERO PININ (H6_W, H7_W) 1.8/1.8 GDI/2.0 GDI
		MITSUBISHI	PAJERO SPORT (K90) 2.5 TD/3.0 V6

GOM-510	Bushings spring	MITSUBISHI	MB111203
Assembly side	Rear	HYUNDAI	GALLOPER I 2.5 TD/3.0 V6
Length [mm]	44	HYUNDAI	GALLOPER II (JK-01) 2.5 TCI/2.5 TD/3.0 V6
Inner diameter [mm]	18	MITSUBISHI	L 200 (K__T) 1.6 K11 (AG32)/2.4/2.5 D/2.5 TD/2.6 4WD
Outsider diameter [mm]	31,5	MITSUBISHI	PAJERO CLASSIC (V2_W) 2.5 TD
		MITSUBISHI	PAJERO I (L04_G, L14_G) 2.0 4WD/2.6/ 2.3 TD/2.5 TD/3.0 V6
		MITSUBISHI	PAJERO II (V2_W, V4_W) 1.8 GDI/2.4/2.5 TD/2.8 TD/3.0 V6/3.5 V6
		MITSUBISHI	PAJERO III (V60) 3.2 DI-D/3.5 V6 GDI
		MITSUBISHI	PAJERO PININ (H6_W, H7_W) 1.8/1.8 GDI/2.0 GDI
		MITSUBISHI	PAJERO SPORT (K90) 2.5 TD/3.0 V6

GOM-511	Bushings spring	MITSUBISHI	MB111071
Assembly side	Rear	HYUNDAI	GALLOPER I 2.5 TD/3.0 V6
Length [mm]	53	HYUNDAI	GALLOPER II (JK-01) 2.5 TCI/2.5 TD/3.0 V6
Inner diameter [mm]	16	MITSUBISHI	L 200 (K__T) 1.6 K11 (AG32)/2.4/2.5 D/2.5 TD/2.6 4WD
Outsider diameter [mm]	28	MITSUBISHI	PAJERO CLASSIC (V2_W) 2.5 TD
		MITSUBISHI	PAJERO I (L04_G, L14_G) 2.0 4WD/2.6/ 2.3 TD/2.5 TD/3.0 V6
		MITSUBISHI	PAJERO II (V2_W, V4_W) 1.8 GDI/2.4/2.5 TD/2.8 TD/3.0 V6/3.5 V6
		MITSUBISHI	PAJERO III (V60) 3.2 DI-D/3.5 V6 GDI
		MITSUBISHI	PAJERO PININ (H6_W, H7_W) 1.8/1.8 GDI/2.0 GDI
		MITSUBISHI	PAJERO SPORT (K90) 2.5 TD/3.0 V6

GOM-512	Bushings spring	MITSUBISHI	MB111070
Assembly side	Rear	HYUNDAI	GALLOPER I 2.5 TD/3.0 V6
Length [mm]	45	HYUNDAI	GALLOPER II (JK-01) 2.5 TCI/2.5 TD/3.0 V6
Inner diameter [mm]	16	MITSUBISHI	L 200 (K__T) 1.6 K11 (AG32)/2.4/2.5 D/2.5 TD/2.6 4WD
Outsider diameter [mm]	27	MITSUBISHI	PAJERO CLASSIC (V2_W) 2.5 TD
		MITSUBISHI	PAJERO I (L04_G, L14_G) 2.0 4WD/2.6/ 2.3 TD/2.5 TD/3.0 V6
		MITSUBISHI	PAJERO II (V2_W, V4_W) 1.8 GDI/2.4/2.5 TD/2.8 TD/3.0 V6/3.5 V6
		MITSUBISHI	PAJERO III (V60) 3.2 DI-D/3.5 V6 GDI
		MITSUBISHI	PAJERO PININ (H6_W, H7_W) 1.8/1.8 GDI/2.0 GDI
		MITSUBISHI	PAJERO SPORT (K90) 2.5 TD/3.0 V6

GOM-513	Bushings spring	MITSUBISHI	MB809388
Assembly side	Rear	HYUNDAI	GALLOPER I 2.5 TD/3.0 V6
Length [mm]	27	HYUNDAI	GALLOPER II (JK-01) 2.5 TCI/2.5 TD/3.0 V6
Inner diameter [mm]	24	MITSUBISHI	L 200 (K__T) 1.6 K11 (AG32)/2.4/2.5 D/2.5 TD/2.6 4WD
Outsider diameter [mm]	59,5	MITSUBISHI	PAJERO CLASSIC (V2_W) 2.5 TD
		MITSUBISHI	PAJERO I (L04_G, L14_G) 2.0 4WD/2.6/ 2.3 TD/2.5 TD/3.0 V6
		MITSUBISHI	PAJERO II (V2_W, V4_W) 1.8 GDI/2.4/2.5 TD/2.8 TD/3.0 V6/3.5 V6
		MITSUBISHI	PAJERO III (V60) 3.2 DI-D/3.5 V6 GDI
		MITSUBISHI	PAJERO PININ (H6_W, H7_W) 1.8/1.8 GDI/2.0 GDI
		MITSUBISHI	PAJERO SPORT (K90) 2.5 TD/3.0 V6
		MITSUBISHI	PAJERO IV (V80) 3.2 DI-D

GOM-514	Silentblock Track Control Arm	MITSUBISHI	MB631492
Assembly side	Rear	HYUNDAI	GALLOPER I 2.5 TD/3.0 V6
Length [mm]	60	HYUNDAI	GALLOPER II (JK-01) 2.5 TCI/2.5 TD/3.0 V6
Inner diameter [mm]	16	MITSUBISHI	L 200 (K__T) 1.6 K11 (AG32)/2.4/2.5 D/2.5 TD/2.6 4WD
Outsider diameter [mm]	65	MITSUBISHI	PAJERO CLASSIC (V2_W) 2.5 TD
		MITSUBISHI	PAJERO I (L04_G, L14_G) 2.0 4WD/2.6/ 2.3 TD/2.5 TD/3.0 V6
		MITSUBISHI	PAJERO II (V2_W, V4_W) 1.8 GDI/2.4/2.5 TD/2.8 TD/3.0 V6/3.5 V6
		MITSUBISHI	PAJERO III (V60) 3.2 DI-D/3.5 V6 GDI
		MITSUBISHI	PAJERO PININ (H6_W, H7_W) 1.8/1.8 GDI/2.0 GDI
		MITSUBISHI	PAJERO SPORT (K90) 2.5 TD/3.0 V6

GOM-516	Bushings spring	MITSUBISHI	MB109529
Assembly side	Rear	HYUNDAI	GALLOPER I 2.5 TD/3.0 V6
Outsider diameter [mm]	28	HYUNDAI	GALLOPER II (JK-01) 2.5 TCI/2.5 TD/3.0 V6
Inner diameter [mm]	18	MITSUBISHI	L 200 (K__T) 1.6 K11 (AG32) 2.0/2.4/2.5 D/2.5 TD/2.6 4WD
Length [mm]	44	MITSUBISHI	PAJERO I (L04_G, L14_G) 2.5 TD (L044G, L049G)

GOM-517	Bar stabilizing Bushings	MITSUBISHI	MB109557
Assembly side	Front	HYUNDAI	GALLOPER I 2.5 TD/3.0 V6
Length [mm]	35,5	HYUNDAI	GALLOPER II (JK-01) 2.5 TCI/2.5 TD/3.0 V6
Width [mm]	36	MITSUBISHI	L 200 (K__T) 1.6 K11 (AG32) 2.0/2.4/2.5 D/2.5 TD/2.6 4WD
Height [mm]	37	MITSUBISHI	PAJERO I (L04_G, L14_G) 2.5 TD (L044G, L049G)
Inner diameter [mm]	25		

GOM-518	Bar stabilizing Bushings	MITSUBISHI	MB584146
Length [mm]	34	HYUNDAI	GALLOPER I 2.5 TD/3.0 V6
Inner diameter [mm]	24	HYUNDAI	GALLOPER II (JK-01) 2.5 TCI/2.5 TD/3.0 V6
Outsider diameter [mm]	37	MITSUBISHI	L 200 (K__T) 1.6 K11 (AG32) 2.0/2.4/2.5 D/2.5 TD/2.6 4WD
		MITSUBISHI	PAJERO I (L04_G, L14_G) 2.5 TD (L044G, L049G)

GOM-519	Bar stabilizing Bushings	MITSUBISHI	MB176442
Length [mm]	38	HYUNDAI	GALLOPER I 2.5 TD/3.0 V6
Width [mm]	36	HYUNDAI	GALLOPER II (JK-01) 2.5 TCI/2.5 TD/3.0 V6
Height [mm]	35	MITSUBISHI	L 200 (K__T) 1.6 K11 (AG32) 2.0/2.4/2.5 D/2.5 TD/2.6 4WD
Inner diameter [mm]	22	MITSUBISHI	PAJERO I (L04_G, L14_G) 2.5 TD (L044G, L049G)

GOM-520	Bar stabilizing Bushings	MITSUBISHI	MB175581
Length [mm]	39	HYUNDAI	GALLOPER I 2.5 TD/3.0 V6
Width [mm]	33	HYUNDAI	GALLOPER II (JK-01) 2.5 TCI/2.5 TD/3.0 V6
Height [mm]	39	MITSUBISHI	L 200 (K__T) 1.6 K11 (AG32) 2.0/2.4/2.5 D/2.5 TD/2.6 4WD
Inner diameter [mm]	22		

O.E.M. names and numbers are used for reference purposes only Ashika assumes no responsibility for possible errors

GOM-521	Bar stabilizing Bushings	MITSUBISHI	MB109219
Length [mm]	36	HYUNDAI	GALLOPER I 2.5 TD/3.0 V6
Width [mm]	40	HYUNDAI	GALLOPER II (JK-01) 2.5 TCI/2.5 TD/3.0 V6
Height [mm]	37,5	MITSUBISHI	L 200 (K__T) 1.6 K11 (AG32) 2.0/2.4/2.5 D/2.5 TD/2.6 4WD
Inner diameter [mm]	20	MITSUBISHI	PAJERO II (V2_W, V4_W) 2.5 TD (V24C, V24W)

GOM-522	Bar stabilizing Bushings	MITSUBISHI	MB267685
Inner diameter [mm]	24	HYUNDAI	GALLOPER I 2.5 TD/3.0 V6
Height [mm]	35	HYUNDAI	GALLOPER II (JK-01) 2.5 TCI/2.5 TD/3.0 V6
Width [mm]	40	MITSUBISHI	L 200 (K__T) 1.6 K11 (AG32) 2.0/2.4/2.5 D/2.5 TD/2.6 4WD
Length [mm]	42	MITSUBISHI	PAJERO II (V2_W, V4_W) 2.5 TD (V24C, V24W)

GOM-523	Bar stabilizing Bushings	MITSUBISHI	MB573783
Assembly side	Front	HYUNDAI	GALLOPER I 2.5 TD/3.0 V6
Length [mm]	39	HYUNDAI	GALLOPER II (JK-01) 2.5 TCI/2.5 TD/3.0 V6
Width [mm]	40	MITSUBISHI	L 200 (K__T) 1.6 K11 (AG32) 2.0/2.4/2.5 D/2.5 TD/2.6 4WD
Height [mm]	41	MITSUBISHI	PAJERO II (V2_W, V4_W) 2.5 TD (V24C, V24W)
Inner diameter [mm]	26		

GOM-524	Bar stabilizing Bushings	MITSUBISHI	MB275632
Length [mm]	34,5	HYUNDAI	GALLOPER I 2.5 TD/3.0 V6
Inner diameter [mm]	17	HYUNDAI	GALLOPER II (JK-01) 2.5 TCI/2.5 TD/3.0 V6
Outsider diameter [mm]	49	MITSUBISHI	L 200 (K__T) 1.6 K11 (AG32) 2.0/2.4/2.5 D/2.5 TD/2.6 4WD
		MITSUBISHI	PAJERO II (V2_W, V4_W) 2.5 TD (V24C, V24W)

GOM-525	Bar stabilizing Bushings	MITSUBISHI	MB150095
Length [mm]	46	HYUNDAI	GALLOPER I 2.5 TD/3.0 V6
Width [mm]	45,5	HYUNDAI	GALLOPER II (JK-01) 2.5 TCI/2.5 TD/3.0 V6
Height [mm]	41	MITSUBISHI	L 200 (K__T) 1.6 K11 (AG32) 2.0/2.4/2.5 D/2.5 TD/2.6 4WD
Inner diameter [mm]	29	MITSUBISHI	PAJERO II (V2_W, V4_W) 2.5 TD (V24C, V24W)

GOM-527	Bar stabilizing Bushings	MITSUBISHI	MR150094
Length [mm]	45,3	HYUNDAI	GALLOPER I 2.5 TD/3.0 V6
Width [mm]	43,5	HYUNDAI	GALLOPER II (JK-01) 2.5 TCI/2.5 TD/3.0 V6
Height [mm]	41	MITSUBISHI	L 200 (K__T) 1.6 K11 (AG32) 2.0/2.4/2.5 D/2.5 TD/2.6 4WD
Inner diameter [mm]	27	MITSUBISHI	PAJERO II (V2_W, V4_W) 2.5 TD (V24C, V24W)

GOM-601	Engine Support	DAIHATSU	12361-87306
Assembly side	Front	DAIHATSU	FEROZA Hard Top (F300) 1.6 16V
Length [mm]	133	DAIHATSU	FEROZA Hard Top (F300) 1.6 i 16V
Width [mm]	98	DAIHATSU	FEROZA Soft Top (F300) 1.6 16V
Height [mm]	45	DAIHATSU	FEROZA Soft Top (F300) 1.6 i 16V

GOM-602	Engine Support	DAIHATSU	12361-87306
Assembly side	Front	DAIHATSU	ROCKY Hard Top (F7, F8) 2.0/2.2/2.8 D/2.8 TD
Length [mm]	134	DAIHATSU	ROCKY Soft Top (F7, F8) 2.0/2.2/2.8 D/2.8 TD
Width [mm]	90	DAIHATSU	WILDCAT/ROCKY (F70) 2.8 D/2.8 TD
Height [mm]	47	DAIHATSU	WILDCAT/ROCKY (F75) 2.7 TD/2.8 D

GOM-603	Engine Support	DAIHATSU	42236-81400
Assembly side	Rear	DAIHATSU	12371-87607
Length [mm]	112	DAIHATSU	FEROZA Hard Top (F300) 1.6 16V
Width [mm]	102	DAIHATSU	FEROZA Soft Top (F300) 1.6 i 16V
Height [mm]	35	DAIHATSU	ROCKY Hard Top (F7, F8) 2.0/2.2/2.8 D/2.8 TD
		DAIHATSU	ROCKY Soft Top (F7, F8) 2.0/2.2/2.8 D/2.8 TD
		DAIHATSU	WILDCAT/ROCKY (F70) 2.8 D/2.8 TD
		DAIHATSU	WILDCAT/ROCKY (F75) 2.7 TD/2.8 D

GOM-605	Silentblock spring	DAIHATSU	90043-85046
Assembly side	Front/Rear	DAIHATSU	FEROZA Hard Top (F300) 1.6 16V
Length [mm]	74	DAIHATSU	FEROZA Soft Top (F300) 1.6 i 16V
Inner diameter [mm]	16	DAIHATSU	ROCKY Hard Top (F7, F8) 2.0/2.2/2.8 D/2.8 TD
Outsider diameter [mm]	36,2	DAIHATSU	ROCKY Soft Top (F7, F8) 2.0/2.2/2.8 D/2.8 TD
		DAIHATSU	WILDCAT/ROCKY (F70) 2.8 D/2.8 TD
		DAIHATSU	WILDCAT/ROCKY (F75) 2.7 TD/2.8 D

GOM-606	Bushings spring	DAIHATSU	90043-85049
Assembly side	Rear	DAIHATSU	FEROZA Hard Top (F300) 1.6 16V
Length [mm]	55	DAIHATSU	FEROZA Soft Top (F300) 1.6 i 16V
Inner diameter [mm]	30	DAIHATSU	ROCKY Hard Top (F7, F8) 2.0/2.2/2.8 D/2.8 TD
Outsider diameter [mm]	45	DAIHATSU	ROCKY Soft Top (F7, F8) 2.0/2.2/2.8 D/2.8 TD
		DAIHATSU	WILDCAT/ROCKY (F70) 2.8 D/2.8 TD
		DAIHATSU	WILDCAT/ROCKY (F75) 2.7 TD/2.8 D

GOM-607	Bar stabilizing Bushings	DAIHATSU	48815-20026
Assembly side	Central Front	DAIHATSU	ROCKY Hard Top (F7, F8) 2.0/2.2/2.8 D/2.8 TD
Length [mm]	39,5	DAIHATSU	ROCKY Soft Top (F7, F8) 2.0/2.2/2.8 D/2.8 TD
Width [mm]	30	DAIHATSU	WILDCAT/ROCKY (F70) 2.8 D/2.8 TD
Height [mm]	31,2	DAIHATSU	WILDCAT/ROCKY (F75) 2.7 TD/2.8 D
Inner diameter [mm]	16		

GOM-608	Bar stabilizing Bushings	DAIHATSU	48815-87601
Assembly side	Central Front	DAIHATSU	FEROZA Hard Top (F300) 1.6 16V
Length [mm]	40	DAIHATSU	FEROZA Hard Top (F300) 1.6 i 16V
Width [mm]	32	DAIHATSU	FEROZA Soft Top (F300) 1.6 16V
Height [mm]	34,3	DAIHATSU	FEROZA Soft Top (F300) 1.6 i 16V
Inner diameter [mm]	23		

GOM-609	Bar stabilizing Bushings	DAIHATSU	90045-40165
Assembly side	Side Front	DAIHATSU	FEROZA Hard Top (F300) 1.6 16V
Length [mm]	16,2	DAIHATSU	FEROZA Hard Top (F300) 1.6 i 16V
Inner diameter [mm]	10	DAIHATSU	FEROZA Soft Top (F300) 1.6 16V
Outsider diameter [mm]	25	DAIHATSU	FEROZA Soft Top (F300) 1.6 i 16V

GOM-405	Shock spring Support	SUZUKI	41710-60B00
Assembly side	Front	SUZUKI	SWIFT II (AH, AJ) 1.3 (SF413, AH35)/1.6
Length [mm]	133	SUZUKI	SWIFT II 2 volume (EA, MA) 1.0/1.3
Width [mm]	47		
Height [mm]	132		
Inner diameter [mm]	34		

GOM-801	Shift Support	SUZUKI	11620-71C10
Length [mm]	86,2	SUZUKI	SWIFT Cabriolet (SF413) 1.3 (SF413, AK35)
Width [mm]	56	SUZUKI	SWIFT II (AH, AJ) 1.6 i (SF416, AH14)
Height [mm]	103,5	SUZUKI	SWIFT II (AH, AJ) 1.6 i 4WD (SF416, AJ14)
Inner diameter [mm]	10	SUZUKI	SWIFT II 2 volume / Sloping tail (EA, MA) 1.0 (SF310, AA44)/1.3

GOM-802	Engine Support	SUZUKI	11610-80020
Assembly side	Front	SUZUKI	SJ 410 1.0
Length [mm]	110	SUZUKI	SJ 410 Cabrio 1.0
Width [mm]	74	SUZUKI	SJ 413 1.3
Height [mm]	44	SUZUKI	SJ 413 1.3

O.E.M. names and numbers are used for reference purposes only Ashika assumes no responsibility for possible errors

GOM-803	Engine Support	SUZUKI	11610-80000
Assembly side	Front	SUZUKI	SJ 410 1.0
Length [mm]	91,5	SUZUKI	SJ 410 Cabrio 1.0
Width [mm]	60	SUZUKI	SJ 413 1.3
Height [mm]	45	SUZUKI	SJ 413 1.3

GOM-804	Engine Support	SUZUKI	11710-80010
Assembly side	Rear	SUZUKI	SJ 410 1.0
Length [mm]	111	SUZUKI	SJ 410 Cabrio 1.0
Width [mm]	81,5	SUZUKI	SJ 413 1.3
Height [mm]	41	SUZUKI	SJ 413 1.3
Inner diameter [mm]	10		

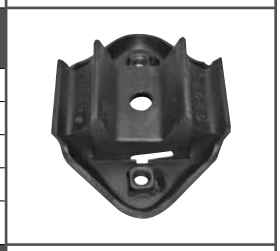

GOM-805	Adaptor Support	SUZUKI	29650-82C00
Assembly side	Front/Rear	SUZUKI	SJ 410 1.0
Length [mm]	52,5	SUZUKI	SJ 410 Cabrio 1.0
Width [mm]	51	SUZUKI	SJ 413 1.3
Height [mm]	27,5	SUZUKI	SJ 413 1.3

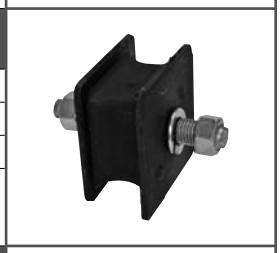

GOM-806	Engine Support	SUZUKI	11620-58B00
Assembly side	Front	SUZUKI	VITARA (ET, TA) 1.6 (ET)
Length [mm]	130	SUZUKI	VITARA (ET, TA) 1.6 (TA)
Width [mm]	87	SUZUKI	VITARA Cabrio (ET, TA) 1.6 (TA)
Height [mm]	62		

GOM-807	Engine Support	SUZUKI	11610-58B01
Assembly side	Front	SUZUKI	VITARA (ET, TA) 1.6 (ET)/1.6 16V/1.9 D/2.0 16V/2.0 TD/2.0 V6/2.5 V6
Length [mm]	152	SUZUKI	VITARA Cabrio (ET, TA) 1.6 (TA)
Width [mm]	87	SUZUKI	VITARA Cabrio (ET, TA) 1.6 16V (ET)
Height [mm]	58	SUZUKI	VITARA Cabrio (ET, TA) 1.9 D (ET)
		SUZUKI	VITARA Cabrio (ET, TA) 2.0 16V (ET)

GOM-808	Engine Support	SUZUKI	11710-60A01
Assembly side	Rear	SUZUKI	VITARA (ET, TA) 1.6 (ET)
Length [mm]	114	SUZUKI	VITARA (ET, TA) 1.6 (TA)
Width [mm]	61	SUZUKI	VITARA Cabrio (ET, TA) 1.6 (TA)
Height [mm]	56		
Inner diameter [mm]	25		

GOM-809	Shock spring Support	SUZUKI	41810-60A00
Assembly side	Rear	SUZUKI	VITARA (ET, TA) 1.6 (ET)/1.6 16V/1.9 D/2.0 16V/2.0 TD/2.0 V6/ 2.5 V6
Length [mm]	104	SUZUKI	VITARA Cabrio (ET, TA) 1.6 (TA)
Width [mm]	38	SUZUKI	VITARA Cabrio (ET, TA) 1.6 16V (ET)
Height [mm]	106	SUZUKI	VITARA Cabrio (ET, TA) 1.9 D (ET)
Inner diameter [mm]	17	SUZUKI	VITARA Cabrio (ET, TA) 2.0 16V (ET)

GOM-810	Adaptor Support	SUZUKI	29610-82C00
Assembly side	Front/Rear	SUZUKI	SJ 410 1.0
Length [mm]	50	SUZUKI	SJ 410 Cabrio 1.0
Width [mm]	49	SUZUKI	SJ 413 1.3
Height [mm]	29	SUZUKI	SJ 413 1.3

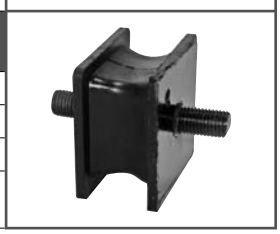

GOM-811	Bushings spring	SUZUKI	41331-62020
Assembly side	Front	SUZUKI	SAMURAI (SJ) 1.0 (SJ 410)
Length [mm]	33,2	SUZUKI	SAMURAI (SJ) 1.3 (SJ 413)
Width [mm]	41	SUZUKI	SAMURAI (SJ) 1.9 TD
Height [mm]	15,4	SUZUKI	SANTANA 1.0 (SJ410) F10A/(SJ413) 1.3
		SUZUKI	SJ 410 1.0/SJ 413 1.3

GOM-812	Bushings spring	SUZUKI	09305-13002
Assembly side	Front/Rear	SUZUKI	SAMURAI (SJ) 1.0 (SJ 410)
Length [mm]	32	SUZUKI	SAMURAI (SJ) 1.3 (SJ 413)
Inner diameter [mm]	13	SUZUKI	SAMURAI (SJ) 1.9 TD
Outsider diameter [mm]	30	SUZUKI	SANTANA 1.0 (SJ410) F10A/(SJ413) 1.3
		SUZUKI	SJ 410 1.0/SJ 413 1.3

GOM-813	Silentblock spring	SUZUKI	09319-12023
Assembly side	Rear	SUZUKI	SJ 410 1.0
Length [mm]	65	SUZUKI	SJ 410 Cabrio 1.0
Inner diameter [mm]	12	SUZUKI	SJ 413 1.3
Outsider diameter [mm]	41	SUZUKI	SJ 413 1.3

GOM-814	Bar stabilizing Bushings	SUZUKI	42412-60A00
Assembly side	Front	SUZUKI	VITARA (ET, TA) 1.6 (ET)
Length [mm]	43,2	SUZUKI	VITARA (ET, TA) 1.9 D (ET)/2.0 TD
Width [mm]	33	SUZUKI	VITARA (ET, TA) 2.0 V6 24V (ET)/2.5 V6 24V
Height [mm]	40	SUZUKI	VITARA Cabrio (ET, TA) 1.6 (TA)
Inner diameter [mm]	24	SUZUKI	VITARA Cabrio (ET, TA) 1.9 D (ET)/2.0 16V

GOM-815	Silentblock Track Control Arm	SUZUKI	09319-12044
Assembly side	Front	SUZUKI	VITARA (ET, TA) 1.6 (ET)
Length [mm]	65	SUZUKI	VITARA (ET, TA) 1.9 D (ET)/2.0 TD
Inner diameter [mm]	13	SUZUKI	VITARA (ET, TA) 2.0 V6 24V (ET)/2.5 V6 24V
Outsider diameter [mm]	45	SUZUKI	VITARA Cabrio (ET, TA) 1.6 (TA)
		SUZUKI	VITARA Cabrio (ET, TA) 1.9 D (ET)/2.0 16V

GOM-816	Silentblock Track Control Arm	SUZUKI	9319-12045
Assembly side	Rear	SUZUKI	VITARA (ET, TA) 1.6 (ET)
Length [mm]	64	SUZUKI	VITARA (ET, TA) 1.9 D (ET)/2.0 TD
Inner diameter [mm]	14	SUZUKI	VITARA (ET, TA) 2.0 V6 24V (ET)/2.5 V6 24V
Outsider diameter [mm]	42,4	SUZUKI	VITARA Cabrio (ET, TA) 1.6 (TA)
		SUZUKI	VITARA Cabrio (ET, TA) 1.9 D (ET)/2.0 16V

GOM-817	Bar stabilizing Bushings	SUZUKI	09320-10024
Assembly side	Front/Rear Side	SUZUKI	VITARA (ET, TA) 1.6 (ET)
Length [mm]	16	SUZUKI	VITARA (ET, TA) 1.9 D (ET)/2.0 TD
Inner diameter [mm]	10	SUZUKI	VITARA (ET, TA) 2.0 V6 24V (ET)/2.5 V6 24V
Outsider diameter [mm]	25	SUZUKI	VITARA Cabrio (ET, TA) 1.6 (TA)
		SUZUKI	VITARA Cabrio (ET, TA) 1.9 D (ET)/2.0 16V

GOM-818	Silentblock Track Control Arm	SUZUKI	09319-14007
Assembly side	Front	SUZUKI	VITARA (ET, TA) 1.6 (ET)
Length [mm]	64	SUZUKI	VITARA (ET, TA) 1.9 D (ET)/2.0 TD
Inner diameter [mm]	14	SUZUKI	VITARA (ET, TA) 2.0 V6 24V (ET)/2.5 V6 24V
Outsider diameter [mm]	41	SUZUKI	VITARA Cabrio (ET, TA) 1.6 (TA)
		SUZUKI	VITARA Cabrio (ET, TA) 1.9 D (ET)/2.0 16V

O.E.M. names and numbers are used for reference purposes only Ashika assumes no responsibility for possible errors

GOM-900	Support	ISUZU	8-97025-753-0
Specification	Shaft	ISUZU	TROOPER (UBS) 2.2 D 4x4
Length [mm]	146,5	ISUZU	TROOPER (UBS) 2.8 TD (UBS55)
Width [mm]	59	ISUZU	TROOPER (UBS) 2.8 TD (UBS55)
Height [mm]	138		
Inner diameter [mm]	30		

GOM-901	Engine Support	ISUZU	8-94375282-5
Assembly side	Front Right	ISUZU	TROOPER (UB) 3.1 D
Length [mm]	145	ISUZU	TROOPER (UB) 3.2
Width [mm]	143	OPEL	MONTEREY A (UBS_) 3.1 TD (UBS69_)
Height [mm]	86	OPEL	MONTEREY A (UBS_) 3.2 (UBS25_)

GOM-902	Engine Support	ISUZU	8-94375283-2
Assembly side	Front Left	ISUZU	TROOPER (UB) 3.1 D
Length [mm]	145	ISUZU	TROOPER (UB) 3.2
Width [mm]	143	OPEL	MONTEREY A (UBS_) 3.1 TD (UBS69_)
Height [mm]	89	OPEL	MONTEREY A (UBS_) 3.2 (UBS25_)

GOM-903	Engine Support	ISUZU	8-91733-866-0
Length [mm]	157	ISUZU	TROOPER (UB) 3.1 D
Width [mm]	89,5	ISUZU	TROOPER (UB) 3.2
Height [mm]	54	OPEL	MONTEREY A (UBS_) 3.1 TD (UBS69_)
		OPEL	MONTEREY A (UBS_) 3.2 (UBS25_)

GOM-904	Engine Support	ISUZU	8-97104-157-1RH
Assembly side	Front Right	ISUZU	TROOPER (UB) 3.1 D
Length [mm]	142	ISUZU	TROOPER (UB) 3.2
Width [mm]	112	ISUZU	TROOPER Open off-roader (UB) 3.1 D
Height [mm]	88	ISUZU	TROOPER Open off-roader (UB) 3.2
		OPEL	MONTEREY A (UBS_) 3.1 TD (UBS69_)
		OPEL	MONTEREY A (UBS_) 3.2 (UBS25_)

GOM-905	Suspension, Engine	ISUZU	8-97104-158-1LH
Assembly side	Front Left	ISUZU	TROOPER (UB) 3.1 D
Length [mm]	142	ISUZU	TROOPER (UB) 3.2
Width [mm]	112	ISUZU	TROOPER Open off-roader (UB) 3.1 D
Height [mm]	89	ISUZU	TROOPER Open off-roader (UB) 3.2
		OPEL	MONTEREY A (UBS_) 3.1 TD (UBS69_)
		OPEL	MONTEREY A (UBS_) 3.2 (UBS25_)

GOM-906	Bushings spring	ISUZU	8-94223-168-0
Assembly side	Rear	ISUZU	TROOPER (UB) 3.1 D/3.2
Length [mm]	36	ISUZU	TROOPER (UBS) 2.2 D 4x4/2.8 TD
Inner diameter [mm]	18	ISUZU	TROOPER 3.0 DTI/3.5 V6 24V
Outsider diameter [mm]	40,5	ISUZU	TROOPER Open off-roader (UB) 3.1 D/3.2
		ISUZU	TROOPER Open off-roader (UBS) 2.2 (UBS13)/2.2 D/2.2 TD/2.3/2.6 i
		ISUZU	TROOPER Open off-roader 3.0 DTI/3.5 V6 24V
		OPEL	MONTEREY A (UBS_) 3.1 TD (UBS69_)/3.2
		OPEL	MONTEREY B 3.0 DTI/3.5 V6 24V

GOM-907	Bushings spring	ISUZU	8-94234-319-0
Assembly side	Rear	ISUZU	TROOPER (UB) 3.1 D/3.2
Length [mm]	35	ISUZU	TROOPER (UBS) 2.2 D 4x4/2.8 TD
Inner diameter [mm]	19	ISUZU	TROOPER 3.0 DTI/3.5 V6 24V
Outsider diameter [mm]	29	ISUZU	TROOPER Open off-roader (UB) 3.1 D/3.2
		ISUZU	TROOPER Open off-roader (UBS) 2.2 (UBS13)/2.2 D/2.2 TD/2.3/2.6 i
		ISUZU	TROOPER Open off-roader 3.0 DTI/3.5 V6 24V
		OPEL	MONTEREY A (UBS_) 3.1 TD (UBS69_)/3.2
		OPEL	MONTEREY B 3.0 DTI/3.5 V6 24V

GOM-908	Silentblock Track Control Arm	ISUZU	8-94226-557-2
Assembly side	Upper	ISUZU	TROOPER (UB) 3.1 D/3.2
Length [mm]	45	ISUZU	TROOPER (UBS) 2.2 D 4x4/2.8 TD
Inner diameter [mm]	18	ISUZU	TROOPER 3.0 DTI/3.5 V6 24V
Outsider diameter [mm]	36	ISUZU	TROOPER Open off-roader (UB) 3.1 D/3.2
		ISUZU	TROOPER Open off-roader (UBS) 2.2 (UBS13)/2.2 D/2.2 TD/2.3/2.6 i
		ISUZU	TROOPER Open off-roader 3.0 DTI/3.5 V6 24V
		OPEL	MONTEREY A (UBS_) 3.1 TD (UBS69_)/3.2
		OPEL	MONTEREY B 3.0 DTI/3.5 V6 24V

GOM-909	Silentblock Track Control Arm	ISUZU	8-94223-366-0
Assembly side	Lower	ISUZU	TROOPER (UB) 3.1 D/3.2
Length [mm]	63,5	ISUZU	TROOPER (UBS) 2.2 D 4x4/2.8 TD
Inner diameter [mm]	14	ISUZU	TROOPER 3.0 DTI/3.5 V6 24V
Outsider diameter [mm]	35	ISUZU	TROOPER Open off-roader (UB) 3.1 D/3.2
		ISUZU	TROOPER Open off-roader (UBS) 2.2 (UBS13)/2.2 D/2.2 TD/2.3/2.6 i
		ISUZU	TROOPER Open off-roader 3.0 DTI/3.5 V6 24V
		OPEL	MONTEREY A (UBS_) 3.1 TD (UBS69_)/3.2
		OPEL	MONTEREY B 3.0 DTI/3.5 V6 24V

GOM-910	Silentblock Track Control Arm	ISUZU	8-94408-840-3
Assembly side	Upper	ISUZU	TROOPER (UB) 3.1 D/3.2
Length [mm]	45	ISUZU	TROOPER (UBS) 2.2 D 4x4/2.8 TD
Inner diameter [mm]	18	ISUZU	TROOPER 3.0 DTI/3.5 V6 24V
Outsider diameter [mm]	39	ISUZU	TROOPER Open off-roader (UB) 3.1 D/3.2
		ISUZU	TROOPER Open off-roader (UBS) 2.2 (UBS13)/2.2 D/2.2 TD/2.3/2.6 i
		ISUZU	TROOPER Open off-roader 3.0 DTI/3.5 V6 24V
		OPEL	CAMPO (TF_) 2.2 D (TFR52)/2.3/2.5 D/2.5 TD/3.1 TD
		OPEL	FRONTERA A (5_MWL4) 2.2 i (54MWL4)/2.3 TD/2.4 i/2.5 TDS/2.8 TD
		OPEL	FRONTERA A Sport (5_SUD2) 2.0 i (52SUD2, 55SUD2)/2.5 TDS/2.8 TD

GOM-911	Silentblock Track Control Arm		
Assembly side	Upper	ISUZU	TROOPER (UB) 3.1 D/3.2
Length [mm]	56	ISUZU	TROOPER (UBS) 2.2 D 4x4/2.8 TD
Inner diameter [mm]	16,5	ISUZU	TROOPER 3.0 DTI/3.5 V6 24V
Outsider diameter [mm]	36	ISUZU	TROOPER Open off-roader (UB) 3.1 D/3.2
		ISUZU	TROOPER Open off-roader (UBS) 2.2 (UBS13)/2.2 D/2.2 TD/2.3/2.6 i
		ISUZU	TROOPER Open off-roader 3.0 DTI/3.5 V6 24V

O.E.M. names and numbers are used for reference purposes only Ashika assumes no responsibility for possible errors

GOM-912	Silentblock Track Control Arm	ISUZU	9-51151-023-0
Assembly side	Lower	ISUZU	TROOPER (UB) 3.1 D/3.2
Length [mm]	85	ISUZU	TROOPER (UBS) 2.2 D 4x4/2.8 TD
Inner diameter [mm]	18	ISUZU	TROOPER 3.0 DTI/3.5 V6 24V
Outsider diameter [mm]	44	ISUZU	TROOPER Open off-roader (UB) 3.1 D/3.2
		ISUZU	TROOPER Open off-roader (UBS) 2.2 (UBS13)/2.2 D/2.2 TD/2.3/2.6 i
		ISUZU	TROOPER Open off-roader 3.0 DTI/3.5 V6 24V
		OPEL	MONTEREY A (UBS_) 3.1 TD (UBS69_)/3.2
		OPEL	MONTEREY B 3.0 DTI/3.5 V6 24V

GOM-913	Silentblock Track Control Arm	ISUZU	9-51351-029-0
Assembly side	Lower	ISUZU	TROOPER (UB) 3.1 D/3.2
Length [mm]	84	ISUZU	TROOPER (UBS) 2.2 D 4x4/2.8 TD
Inner diameter [mm]	18	ISUZU	TROOPER 3.0 DTI/3.5 V6 24V
Outsider diameter [mm]	44	ISUZU	TROOPER Open off-roader (UB) 3.1 D/3.2
		ISUZU	TROOPER Open off-roader (UBS) 2.2 (UBS13)/2.2 D/2.2 TD/2.3/2.6 i
		ISUZU	TROOPER Open off-roader 3.0 DTI/3.5 V6 24V
		OPEL	MONTEREY A (UBS_) 3.1 TD (UBS69_)/3.2
		OPEL	MONTEREY B 3.0 DTI/3.5 V6 24V

GOM-999	Support universale pompa benzina (elettrica)		
Height [mm]	75	HONDA	CRX II (ED, EE) 1.6 i 16V (ED9) (D16A9)
Inner diameter [mm]	27	HONDA	CRX III (EH, EG) 1.6 i VTi (EG2) (B16A2)
Inner diameter 1 [mm]	35	KIA	SPORTAGE (K00) 2.0 i 16V (FE (16 V))
Outsider diameter [mm]	85,5	KIA	SPORTAGE (K00) 2.0 i 16V 4WD (FE (16 V))
		KIA	SPORTAGE (K00) 2.0 i 4WD (FE)
		MITSUBISHI	PAJERO I (L04_G, L14_G) 3.0 V6 (L141G, L146G) (6G72)
		MITSUBISHI	PAJERO II (V2_W, V4_W) 3.0 V6 (V23W, V43W, V23C) (6G72)
		MITSUBISHI	PAJERO II Open off-roader (V2_W, V4_W) 3.0 V6 (V23W, v43W, V23C) (6G72)
		NISSAN	MICRA (K11) 1.0 i 16V (CG10DE)
		NISSAN	PATROL GR I (Y60) 4.2 Cat. (TB42E)
		NISSAN	TERRANO I (WD21) 2.4 i 4WD (Z24i)
		NISSAN	TERRANO II (R20) 2.4 4WD (KA24E)
		NISSAN	TERRANO II (R20) 2.4 4WD (KA24E)
		NISSAN	TERRANO II (R20) 2.4 i 12V 4WD (KA24E)
		OPEL	MONTEREY A (UBS_) 3.2 (UBS25_) (6VD1)
		PONTIAC	TRANS SPORT '89 2.3 ()
		PONTIAC	TRANS SPORT '89 2.3 ()
		TOYOTA	LAND CRUISER 80 (_J8_) 4.5 24V (FZJ80_) (1FZ-FE)
		TOYOTA	RAV 4 I/ FUNCRUISER (SXA1_) 2.0 16V 4WD (3S-FE)

NOTES

NOTES

NOTES

NOTES

NOTES

Rechtliche Hinweise - Disclaimer - Avvertenze Legali
Information juridique - Advertencias/Juridische Informatie

DE Wir haben uns um die weitestgehende Richtigkeit der in diesem Katalog enthaltenen Angaben bemüht. Wir haften indes nicht für eventuelle Unrichtigkeiten. Dieser Katalog enthält Produkte, die dem Erstausstattungsstandard entsprechen. Wir behalten uns jederzeit technische Änderungen vor. Die im Katalog angeführten Originalnummern und Herstellernamen dienen ausschließlich der Identifizierung des Bauteils und sind nicht auf Lieferscheinen und Rechnungen verwendbar. Die vollständige und auch teilweise Reproduktion unserer Referenzangaben und unseres Katalogs ist verboten.

EN We have made every effort to ensure that the data in this catalogue are as accurate as possible. However, we decline all responsibility for any inaccuracies.
This catalogue contains products of "initial equipment" quality. We reserve the right to make technical changes at any time.
The original numbers and manufacturers' names mentioned in this catalogue are provided solely to allow identification of the component and may not be used on delivery notes and invoices.
Even partial reproduction of our references and catalogue is forbidden.

I Ci siamo adoperati affinché i dati contenuti in questo catalogo siano i più esatti possibili. Tuttavia decliniamo ogni responsabilità per eventuali inesattezze.
Questo catalogo contiene prodotti di qualità “primo equipaggiamento”. Ci riserviamo il diritto di apportare modifiche tecniche in qualsiasi momento. I numeri originali e i nomi dei fabbricanti citati in questo catalogo servono esclusivamente a scopo identificativo del componente e non possono essere utilizzati sulle bolle di accompagnamento e fatture.
La riproduzione, anche parziale dei nostri riferimenti e del nostro catalogo è vietata.

FR Nous avons fait tout notre possible pour que les données de ce catalogue soient exactes. Toutefois, nous déclinons toute responsabilité pour d’éventuelles inexactitudes.
Ce catalogue contient des produits de qualité " équipement standard ". Nous nous réservons le droit d’apporter à tout moment des modifications techniques. Les numéros originaux et les noms des fabricants cités dans ce catalogue servent exclusivement à identifier le composant et ne peuvent pas être utilisés sur les bulletins d’accompagnement et les factures.
La reproduction, même partielle, de nos références et de notre catalogue est rigoureusement interdite.

ES Hemos procurado que los datos que figuran en este catálogo sean lo más exactos posible. No obstante declinamos toda responsabilidad por eventuales imprecisiones.
Este catálogo incluye productos de calidad de “equipos de serie”. Nos reservamos el derecho de introducir modificaciones técnicas en cualquier momento.
Los números originales y los nombres de los fabricantes citados en este catálogo se ofrecen exclusivamente a efectos de identificación del componente y no podrán ser empleados en las cartas de porte ni en las facturas.
Queda prohibida la reproducción total o parcial de nuestros códigos de referencia y nuestro catálogo.

NL Wij hebben ons ingespannen om ervoor te zorgen dat de gegevens in deze catalogus zo exact mogelijk zouden zijn. Wij kunnen echter niet aansprakelijk worden gesteld voor eventuele onnauwkeurigheden.
Deze catalogus bevat producten van “standaarduitrusting” kwaliteit. Wij behouden ons het recht voor om op ieder gewenst ogenblik technische wijzigingen aan te brengen. De in deze catalogus genoemde oorspronkelijke nummers en namen van de fabrikanten dienen uitsluitend ter identificatie van de component en kunnen niet worden gebruikt op de geleidebrieven en facturen. De, ook gedeeltelijke, reproductie van ons referentiemateriaal en de catalogus is verboden.

Certificate of Registration

The Governing Board of
Q.A. International Certification Limited
hereby grants to:

Japanparts S.r.l.

Registration No. : QAIC / IT / 90039 - A

(hereinafter called the Registered Company) the right to be listed in the Directory of Registered Companies in respect of the services listed below. These services shall be offered by the Registered Company at or from only the address given below in accordance with the quality management system in compliance with ***ISO 9001:2000.***

Address to which this Certificate refers :

Via Della Meccanica, 1/A 37139 Verona - Italy

Approved Scope to which this Certificate refers
(Scopo della Certificazione cui il Certificato riferisce)

Commercialisation of Automotive Parts and Accessories
(Commercializzazione di Ricambi per Autoveicoli)
(Further clarification regarding the Scope of this Certificate and the applicability of ISO 9001:2000 requirements may be obtained by consulting the organisation)

Signed for and on behalf of the Board

CHAIRMAN	SCHEME MANAGER
A. J. Duffield	A. Carter

Certificate Issue Date : *13th March 2009* - **Certificate Expiry Date** : *24th January 2010*
Date of Initial Registration : *25th January 2000* - **Re-assessment Date** : *24th January 2012*

This Certificate of Registration is granted subject to the Regulations approved by the Board.

QA INTERNATIONAL

Q.A. International Certification Ltd.
Cleveland Hall
Cleveland Street
Darlington
Co. Durham
DL1 2PE

Tel: +44 (0)1325 384272
Fax: +44(0)1325 480980
www.qai.co.uk

QA INTERNATIONAL CERTIFICATION LIMITED

QA INTERNATIONAL UKAS QUALITY MANAGEMENT Registration Number 046

The use of the Accreditation Mark indicates accreditation in respect of those activities covered by the accreditation certificate number 046.

NEW ELECTRONIC CATALOGUE IN KEY MEMORY

www.ashika.eu

ashika®
Committed to top quality spare parts for Japanese and Korean cars

I NOSTRI CATALOGHI
OUR CATALOGUES

JA-FILTRI
2008/2009
Filtri aria, Filtri carburante, Filtri olio, Filtri abitacolo, Filtri ecologici (Gamma completa)
Air filters, fuel filters, oil filters, cabin filters, ecological filters

JA-FRIZIONI
2007
Kit frizione, Spingidisco frizione, Disco frizione, Cuscinetto frizione, Volani, Parte idraulica frizione
Clutch kits, clutch cover, clutch disc, clutch bearings, flywheel

JA-FRENO
2007
Dischi freno, Pastiglie freno, Ganasce freno, Cilindretti freno, Tamburi freno, Pompe freno, Tubi freno
Brake discs, brake pads, brake shoes, wheel cylinders, brake drums, brake master cylinders, brake hoses

JA-CINGHIE
2007
Kit cinghie e Tendicinghia trasmissione, Cuscinetti tendicinghia e Cinghie distribuzione
Timing kits, tensioners, timing belts

JA-MOTORINI NEW
2010/2011
Motorini e Alternatori nuovi e revisionati
Starters, Alternators

JA-GIUNTI
2008/2009
Kit Giunti omocinetici con fascetta e grasso
Cv joint kits with metal clips and grease

JA-CAT7MM
2008/2009
Ammortizzatori gas, Ammortizzatori sterzo
Gas schock absorbers, stteering dumpers

JA-CAT11
2007
Pompe acqua, Termostati e Giunti viscostatici
Water pumps, Thermostates, Viscous coupling, Radiator cap

JA-CAT12
2008/2009
Spazzole tergi universali anche per applicazioni europee
Universal wiper blades

JA-TIRANT NEW
2010/2011
Parti sospensione e Sterzo
Steering and suspension parts

JA-KITRUOTA
2008/2009
Kit Cuscinetti ruote
Wheel bearing kits

JA-CAT17
2007
Candelette
Glowplugs

JA-CROCIERE
2007
Crociere
Universal joints

JA-CUFFIE
2007
Kit Cuffie
Boots Kit

JA-TAMA
2008/2009
Valvola termostatica TAMA
Termostates TAMA

JA-MMBOOT
Kit protezione universale per ammortizzatori in gomma e Uretano
Bump Rubber Kit Universal Type

JA-FLAT
2008/2009
Spazzole tergicristallo universali FLAT
Universal wiper blades FLAT

JA-FAST MOVING
20092010
Tutto il Fast Moving Asiatico e le ultime novità
All the Asian Fast Moving & the new items

JA-COMMERCIAL
2008/2009
Veicoli commerciali
Commercial vehicles

JA-MBL
2009
Cinghie servizi MITSUBOSHI
Automotive Belts MITSUBOSHI

JA-KOITO
Gruppi Ottici universali KOITO
Universal headlamps units

JJ-HKT
2008/2009
Candelette HKT applicazioni europee e asiatiche
HKT glowplugs for european and asiatic applications

JE-FRIZIONI
2006/2007
Frizioni sportive Racing Exedy
Exedy Racing Clutches

JD-DENSOSONDE
2008/2009
Sonde Lambda DENSO
DENSO oxigen sensors

JD-DENSOMOTO
2008/2009
Candele DENSO moto
DENSO Spark plugs moto

JD-DENSO
2008/2009
Candele DENSO e Candele IRIDIUM
DENSO Spark plugs, IRIDIUM Spark plugs

JD-CANDELETTE
2009/2010
Candelette DENSO
DENSO glowplugs

JD-SPAZZOLE
2007/2008
Spazzole Tergi DENSO
DENSO wiper blades

TecDoc
CERTIFIED DATA SUPPLIER

PARTNER TecCom
PARTNER TecDoc

DOWNLOAD PDF CATALOGUES BY OUR WEB SITE
SCARICA I CATALOGHI IN PDF DAL NOSTRO SITO INTERNET

www.ashika.eu

JA-TIRANT

PARTNER TecCom PARTNER TecDoc

TecDoc CERTIFIED DATA SUPPLIER

www.ashika.eu

TOKYO - SINGAPORE - SYDNEY - ATLANTA - AMSTERDAM - FRANKFURT - WARSAW - SALZBURG - BRÜSSEL - VERONA - ZÜRICH - KOPENAGHEN

8 033001 077360

JA-TIRANT