CONTENTS
INDHOLD
INHALT
CONTENU

1	Symbols and abbreviations Symboler og forkortelser Symbole und Abkürzungen Symboles et abréviations	2
2	Line of products by car make Produktprogram i bilmærkeorden Produktprogramm nach Hersteller Gamme de produits par marque de véhicule	5
3	Drawings Tegninger Zeichnung Plans	123
4	Cross reference list Krydsreferenceliste Umschlüsselungsliste Liste de correspondances	OE → Nissens 193
5	Nissens reference list Nissens-referenceliste Nissens-Referenzliste Liste de références Nissens	Nissens → 233

1 Symbols and abbreviations
Symboler og forkortelser
Symbole und Abkürzungen
Symboles et abréviations

	English	Dansk	Deutsch	Francais
	Vehicle	Køretøj	Fahrzeug	Véhicule
	Engine	Motor	Motor	Moteur
G	Petrol/gasoline	Benzin	Benzin	Essence
D	Diesel	Diesel	Diesel	Diesel
M/A	Manual/automatic transmission	Manuel/automatisk transmission	Man./Aut.Getriebe	Boîte de transmission man./aut.
AC=Air Condition +/-	With/without air condition	Med/uden luftkond.	Mit/ohne Klimaanlage	Air conditionné/non a.c.
NOTE				
3-DOOR	3 doors	3 døre	3 Türen	3 portes
3-ROW	3-row core	3-rækket element	Netz mit 3 Rohrreihen	Faisceau 3 rangées
AFTC	Aftercooler	Efterkøler	Zusatzkühler	Radiateur après combustion
AUS	Australia	Austral.	Austral.	Australie
EOC	Engine oil cooler	Motoroliekøler	Motorölkühler	Radiateur d'huile de moteur
FN	Filler neck	Påfyldningsstuds	Einfüllstutzen	Embase de remplissage
HD	Extra cooling capacity	Ekstra køleydelse	Hochleistung	Capacité de refroidissement extra
HDC	Extra cooling capacity	Ekstra køleydelse	Hochleistung	Capacité de refroidissement extra
I/OL	In-/outlet connection	Til-/afløbsstuds	Ein-/Aus-Anschluss	Embase de remplissage et de vidange
J	Japan	Japan	Japan	Japon
KAT	Catalytic converter	Katalysator	Katalysator	Catalyseur
L. PIN	Long pin	Lang tap	Langer Zapfen	Tenon long
LEA FUEL	Leaded fuel	Blyholdig benzin	Bleihaltiger Kraftstoff	Essence avec plomb
LFN	Large filler neck	Stor påfyldningsstuds	Grosser Einfüllstutzen	Grande embase de remplissage
LHD	Left-hand drive	Venstre-styret	Linkslenkung	Conduite à gauche
ND	Nippondenso	Nippondenso	Nippondenso	Nippondenso
OC=IN	Oil cooler w/inside thread	Oliekøler m/indvendigt gevind	Ölkühler m/ Innengewinde	Radiateur d'huile avec filetage int.
OC=OUT	Oil cooler w/outside thread	Oliekøler m/udvendigt gevind	Ölkühler m/ Aussengewinde	Radiateur d'huile avec filetage ext.
RHD	Right-hand drive	Højre-styret	Rechtslenkung	Conduite à droite
S. PIN	Short pin	Kort tap	Kurzer Zapfen	Tenon court
SCAN	Scandinavian	Skandinavisk	Skandinavisch	Scandinave

SFN	Small filler neck	Lille påfyldningsstuds	Kleine Einfüllöffnung	Petite embase de remplissage
TRAIL	Trailer/Caravan	Anhænger	Trailer	Remorque/caravane
TROPIC	Tropical	Tropisk	Tropisch	Tropical
TST	Thermo switch thread	Termokontakt-gevind	Thermoschaltergewinde	Filetage pour thermocontact
UNL FUEL	Unleaded fuel	Blyfri benzin	Bleifreier Kraftstoff	Essence sans plomb
USA MADE	Made in USA	Fremstillet i USA	Hergestellt	Fabriqué aux Etats-Units
W	With	Med	Mit	Avec
WL	Water level indicator	Vandniveau-indikator	Wasserniveau-Indikator	Détecteur de niveau d'eau
WO	Without	Uden	Ohne	Sans
	Production period	Fremstillingsperiode	Herstellungsperiode	Période de fabrication
OE	Original number	Originalnummer	Originalnummer	Numéro d'origine
+	Further OE numbers in the cross reference list	Yderligere OE-numre i krydsreferencelisten	Weitere OE-Nummern in der Umschlüsselungsliste	Des numéros OE supplémentaires dans la liste de correspondances
DIM.	Dimensions	Mål	Dim.	Dimensions
H	Height	Højde	Höhe	Hauteur
W	Width	Bredde	Breite	Largeur
M=Materials				
A	Aluminium	Aluminium	Aluminium	Aluminium
C	Copper	Kobber	Kupfer	Cuivre
M	Brass tank	Messingvandkasse	Messing-Wasserkästen	Boîte en laiton
P	Plastic tank	Plasticvandkasse	Kunststoff-Wasserkästen	Boîte en plastique
Draw	Drawing	Tegning	Zeichnung	Plan
	Radiator	Køler	Kühler	Radiateur
	Oil cooler	Oliekøler	Ölkühler	Radiateur d´huile
	Intercooler	Intercooler	Intercooler	Intercooler
	Condenser	A/C condenser	Kondensator	Condenseur
	Receiver dryer	Receiver dryer	Trockenfilter	Bouteille déshydratante
	Evaporator	Evaporator	Verdampfer	Evaporateur
	Heater	Varmeapparat	Heizung	Chauffage
	Fan assembly	Ventilator	Lüfter	Ventilateur

2 Line of products by car make
Produktprogram i bilmærkeorden
Produktprogramm nach Hersteller
Gamme de produits par marque de véhicule

Radiators	**7**	**Dryers**	**71**
Oil coolers	**41**	**Evaporators**	**82**
Intercoolers	**45**	**Heaters**	**91**
Condensers	**53**	**Fan assembly**	**112**

CHEVROLET LIGHT VAN	7			53				112
CITROEN LIGHT VAN	9	41	45	53	71	82	91	112
FIAT LIGHT VAN	11	41	45	54	72	82	93	113
FORD LIGHT VAN	12		46	55	72	83	94	114
FORD USA LIGHT VAN	14			56				
GMC LIGHT VAN	15							
HYUNDAI LIGHT VAN	17	41	46	56			96	
KIA LIGHT VAN	18		46	57		83	97	
LDV (96-) LIGHT VAN	18		46	57	73	83		
MAZDA LIGHT VAN	18			57	73	83	97	114
MERCEDES LIGHT VAN	19	41	46	57	73	83	97	114
MITSUBISHI LIGHT VAN	22			59	75			115
NISSAN LIGHT VAN	23		48	60	75	84	100	116
OLDSMOBILE LIGHT VAN	26			62				116
OPEL LIGHT VAN	26		48	62	75	85	101	116
PEUGEOT LIGHT VAN	28	42	50	63	76	86	103	118
PONTIAC LIGHT VAN	29		50	64	77	86	104	119
RENAULT LIGHT VAN	29	42	50	65	77	87	105	119
SEAT LIGHT VAN	32	42		66		87	107	120
TALBOT LIGHT VAN	33						108	
TOYOTA LIGHT VAN	33			66	77	87	108	
TOYOTA LIFT	36							
VAUXHALL LIGHT VAN				67	79			
VOLKSWAGEN LIGHT VAN	36	42	51	67	80	88	109	120

NOTES

RADIATORS

	G/D			AC	Note		OE		Nissens	Dim. H W T	Mat.
CHEVROLET LIGHT VAN											
BLAZER (82-) 2.8	G		M	+/-		01/82 ➧ 12/89	3048771	+	**60960**	600 368 33	P/C
BLAZER (82-) 4.3	G		A	+/-		01/88 ➧ 12/93	52450025	+	**60968A**	667 379 32	P/A
BLAZER (82-) 4.3	G		A	+/-	EOC	01/88 ➧ 12/93	52450025	+	**60968A**	667 379 32	P/A
BLAZER (82-) 5.0	G		A	+/-		01/82 ➧ 12/87	3043877	+	**60971**	720 481 41	M/C
BLAZER (82-) 5.0	G		A	+/-		01/82 ➧ 12/87	3049127	+	**60974**	720 431 34	M/C
BLAZER (82-) 5.7	G		A	+/-		01/82 ➧ 12/91	3043877	+	**60971**	720 481 41	M/C
BLAZER (82-) 5.7	G		A	+/-		01/82 ➧ 12/91	3049127	+	**60974**	720 431 34	M/C
BLAZER (82-) 5.7	G		A	+/-		01/90 ➧ 12/91	3043874	+	**60970**	720 431 19	M/C
BLAZER (82-) 5.7	G		A	+/-		01/90 ➧ 12/91	3043874	+	**60970A**	720 439 32	P/A
BLAZER (82-) 5.7	G		A	+/-	W. EOC	01/92 ➧ 12/93	52458931	+	**60959**	864 418 49	P/C
BLAZER (82-) 5.7	G		A	+/-	W.EOC	01/92 ➧ 12/93	52457702	+	**60946**	870 480 55	M/C
BLAZER (82-) 5.7	G		A	+/-	W.EOC	01/92 ➧ 12/93	52457702	+	**60946A**	773 439 26	P/A
BLAZER (82-) 6.2 D	D		A	+/-		01/82 ➧ 12/91	52457641	+	**60949**	864 478 49	M/C
BLAZER (94-) 2.2	G		A	+/-		01/94 ➧ 12/95	52462547	+	**60915A**	667 379 32	P/A
BLAZER (94-) 2.2	G		A	+/-		01/96 ➧	52472963	+	**609361**	667 379 32	P/A
BLAZER (94-) 2.2	G		A	+/-		01/96 ➧	52472963		**60936A**	667 379 32	P/A
BLAZER (94-) 4.3	G		A	+/-		01/94 ➧ 12/95	52462547	+	**60915A**	667 379 32	P/A
BLAZER (94-) 4.3	G		A	+/-		01/96 ➧	52472963	+	**609361**	667 379 32	P/A
BRAVADA (94-) 2.2	G		A	+/-		01/94 ➧ 12/95	52462547	+	**60915A**	667 379 32	P/A
BRAVADA (94-) 2.2	G		A	+/-		01/96 ➧	52472963	+	**609361**	667 379 32	P/A
BRAVADA (94-) 2.2	G		A	+/-		01/96 ➧	52472963		**60936A**	667 379 32	P/A
BRAVADA (94-) 4.3	G		A	+/-		01/94 ➧ 12/95	52462547	+	**60915A**	667 379 32	P/A
BRAVADA (94-) 4.3	G		A	+/-		01/96 ➧	52472963	+	**609361**	667 379 32	P/A
BRAVADA (01-) 4.2	G		A	+/-		09/01 ➧	52485546		**69211**	460 678 24	P/C
LUMINA APV (89-) 3.1	G		A	+/-		09/89 ➧	52451292	+	**60962**	670 431 34	P/C
MONTANA (89-) 3.1	G		A	+/-		09/89 ➧			**60962**	670 431 34	P/C
PICKUP C/K 4.3	G		M	+/-		01/96 ➧ 12/98	3058768	+	**609691**	720 439 32	P/A
PICKUP C/K 4.3	G		A	+/-		01/94 ➧ 12/95	3058768	+	**609691**	720 439 32	P/A
PICKUP C/K 4.8	G		A	+		/85 ➧ /87	3049127	+	**60974**	720 431 34	M/C
PICKUP C/K 5.0	G		M	+/-		01/96 ➧ 12/98	3058768	+	**609691**	720 439 32	P/A
PICKUP C/K 5.0	G		A	-		/85 ➧ /87	3049127	+	**60974**	720 431 34	M/C
PICKUP C/K 5.0	G		A	+/-		/81 ➧ /87	3043877	+	**60971**	720 481 41	M/C
PICKUP C/K 5.0	G		A	+/-		01/88 ➧ 12/94	52457840	+	**609691**	720 439 32	P/A
PICKUP C/K 5.0	G		A	+/-	W/O EOC	01/88 ➧ 12/95	3058768	+	**609691**	720 439 32	P/A
PICKUP C/K 5.7	G		A			/85 ➧ /87	3049127	+	**60974**	720 431 34	M/C
PICKUP C/K 5.7	G		A		EOC	/92 ➧ /94	52457702	+	**60946**	870 480 55	M/C
PICKUP C/K 5.7	G		A		EOC	/92 ➧ /94	52457702	+	**60946A**	773 439 26	P/A
PICKUP C/K 5.7	G		A	+/-		/81 ➧ /87	3043877	+	**60971**	720 481 41	M/C
PICKUP C/K 5.7	G		A	+/-	EOC	01/88 ➧ 12/93	52458931	+	**60959**	864 418 49	P/C
PICKUP C/K 5.7	G		A	+/-		01/88 ➧ 12/93	52457840	+	**609691**	720 439 32	P/A
PICKUP C/K 5.7	G		A	+/-	W/O EOC	01/88 ➧ 12/94	3058768	+	**609691**	720 439 32	P/A
PICKUP C/K 6.2 D	D		A			/88 ➧	52457626	+	**60967**	864 495 48	M/C
PICKUP C/K 6.2 D	D		A	+/-		/82 ➧ /90	52457641	+	**60949**	864 478 49	M/C
PICKUP C/K 6.2 D	D		A	+/-		/88 ➧	52458931	+	**60959**	864 418 49	P/C
PICKUP C/K 6.5	G		A	+		/91 ➧ /93	52465219		**60945**	864 478 49	M/C
PICKUP C/K 7.4	G		A	+/-	W. EOC	/82 ➧ /82	52457641	+	**60949**	864 478 49	M/C
PICKUP C/K 7.4	G		A	+/-	W. EOC	/89 ➧ /93	52458931	+	**60959**	864 418 49	P/C
PICKUP C/K 7.4	G		A	+/-		01/92 ➧ 12/93	52457702	+	**60946**	870 480 55	M/C
PICKUP R/V 4.8	G		A	-		/87 ➧ /89	3049127	+	**60974**	720 431 34	M/C

RADIATORS

	G/D			AC	Note			OE		Nissens	Dim. H	W	T	Mat.
CHEVROLET LIGHT VAN (../..)														
PICKUP R/V 5.0	G		A			/91	/91	3043874	+	**60970**	720	431	19	M/C
PICKUP R/V 5.0	G		A			/91	/91	3043874	+	**60970A**	720	439	32	P/A
PICKUP R/V 5.0	G		A	-		/87	/91	3049127	+	**60974**	720	431	34	M/C
PICKUP R/V 5.0	G		A	+/-		/87	/87	3043877	+	**60971**	720	481	41	M/C
PICKUP R/V 5.7	G		A			/87	/91	3049127	+	**60974**	720	431	34	M/C
PICKUP R/V 5.7	G		A			/91	/91	3043874	+	**60970**	720	431	19	M/C
PICKUP R/V 5.7	G		A	+/-		/87	/91	3043877	+	**60971**	720	481	41	M/C
PICKUP R/V 6.2 D	D		A	+/-		/87	/91	52457641	+	**60949**	864	478	49	M/C
PICKUP R/V 7.4	G			+/-		/89	/91	52450273	+	**60972**	864	478	49	M/C
PICKUP S/T 2.2	G		A	+/-		01/98	12/00	52472963	+	**609361**	667	379	32	P/A
PICKUP S/T 2.2	G		A	+/-		01/98	12/00	52472963		**60936A**	667	379	32	P/A
PICKUP S/T 2.2 D	D		M			/84	/85	3048771	+	**60960**	600	368	33	P/C
PICKUP S/T 2.8	G		M			/82	/85	3048771	+	**60960**	600	368	33	P/C
PICKUP S/T 4.3	G		A	+/-		01/94	12/95	52462547	+	**60915A**	667	379	32	P/A
PICKUP S/T 4.3	G		A	+/-	EOC	01/96	12/00	52472963	+	**609361**	667	379	32	P/A
PICKUP S/T 4.3	G			+/-	EOC	01/88	12/93	52450025	+	**60968A**	667	379	32	P/A
PICKUP S/T 4.3	G			+/-		01/88	12/93	52450025	+	**60968A**	667	379	32	P/A
PICKUP S10 4.3	G		M	+/-		01/96	12/98	52473484		**69195A**	667	379	22	P/A
SSR (01-) 4.2	G		A	+/-		09/01		52485546		**69211**	460	678	24	P/C
SUBURBAN (81-) 5.0	G		A	+/-		/81	/87	3043877	+	**60971**	720	481	41	M/C
SUBURBAN (81-) 5.0	G		A	+/-		/82	/87	3049127	+	**60974**	720	431	34	M/C
SUBURBAN (81-) 5.7	G		A	+/-		/81	/91	3043877	+	**60971**	720	481	41	M/C
SUBURBAN (81-) 5.7	G		A	+/-		/82	/91	3049127	+	**60974**	720	431	34	M/C
SUBURBAN (81-) 5.7	G		A	+/-		/91	/91	3043874	+	**60970**	720	431	19	M/C
SUBURBAN (81-) 5.7	G		A	+/-		/91	/91	3043874	+	**60970A**	720	439	32	P/A
SUBURBAN (81-) 6.2 D	D		A	+/-		/82	/91	52457641	+	**60949**	864	478	49	M/C
SUBURBAN (81-) 7.4	G		A	+/-		/88	/91	52450273	+	**60972**	864	478	49	M/C
SUBURBAN (92-) 5.7	G		A	+/-		01/92	12/93	52457702	+	**60946**	870	480	55	M/C
SUBURBAN (92-) 5.7	G		A	+/-		01/92	12/93	52457702	+	**60946A**	773	439	26	P/A
SUBURBAN (92-) 6.5 TD	D		A	+		01/92	12/93	52465219	+	**60945**	864	478	49	M/C
SUBURBAN (92-) 7.4	G		A	+/-		01/92	12/93	52457702	+	**60946**	870	480	55	M/C
TRAILBLAZER (01-) 4.2	G		A	+/-		09/01		52485546		**69211**	460	678	24	P/C
TRANS SPORT (89-) 3.1	G		A	+/-		09/89				**60962**	670	431	34	P/C
VAN G-SERIE (81-) 4.1	G		A	+/-		01/81	12/82	3049127	+	**60974**	720	431	34	M/C
VAN G-SERIE (81-) 4.1	G		A	+/-		01/83	12/84	3043874	+	**60970**	720	431	19	M/C
VAN G-SERIE (81-) 4.1	G		A	+/-		01/83	12/84	3043874	+	**60970A**	720	439	32	P/A
VAN G-SERIE (81-) 4.3	G		A	+/-		01/93	12/96	52461601	+	**608911**	775	439	32	P/A
VAN G-SERIE (81-) 5.0	G		A	+/-		01/81	12/91	3043874	+	**60970**	720	431	19	M/C
VAN G-SERIE (81-) 5.0	G		A	+/-		01/81	12/91	3049127	+	**60974**	720	431	34	M/C
VAN G-SERIE (81-) 5.0	G		A	+/-	W/I EOC	01/87	12/95	3043390	+	**60940**	670	405	45	M/C
VAN G-SERIE (81-) 5.0	G		A	+/-		01/94	12/95	52461601	+	**608911**	775	439	32	P/A
VAN G-SERIE (81-) 5.7	G		A	+/-		01/81	12/91	3043874	+	**60970**	720	431	19	M/C
VAN G-SERIE (81-) 5.7	G		A	+/-		01/81	12/91	3049127	+	**60974**	720	431	34	M/C
VAN G-SERIE (81-) 5.7	G		A	+/-	W/I EOC	01/87	12/95	3043390	+	**60940**	670	405	45	M/C
VAN G-SERIE (81-) 5.7	G		A	+/-		01/94	12/96	52461601	+	**608911**	775	439	32	P/A
VAN G-SERIE (81-) 5.7	G		A	+/-		01/94	12/96	52461601	+	**608911**	775	439	32	P/A
VAN G-SERIE (81-) 5.7	G		A	+/-		01/94	12/96	52461601	+	**608911**	775	439	32	P/A
VAN P-SERIE (81-) 4.3	G		A	+/-		01/87	12/93	3049127	+	**60974**	720	431	34	M/C

RADIATORS

	G/D			AC	Note		OE		Nissens	Dim. H W T	Mat.
CHEVROLET LIGHT VAN (../..)											
VAN P-SERIE (81-) 4.8	G		A	+/-		01/84 ➧ 12/89	3043874	+	**60970**	720 431 19	M/C
VAN P-SERIE (81-) 4.8	G		A	+/-		01/84 ➧ 12/89	3043874	+	**60970A**	720 439 32	P/A
VAN P-SERIE (81-) 4.8	G		A	+/-		01/87 ➧ 12/93	3049127	+	**60974**	720 431 34	M/C
VAN P-SERIE (81-) 5.7	G		A	+/-		01/81 ➧ 12/93	3043874	+	**60970**	720 431 19	M/C
VAN P-SERIE (81-) 5.7	G		A	+/-		01/82 ➧ 12/93	3043877	+	**60971**	720 481 41	M/C
VAN P-SERIE (81-) 6.2 D	D		A	+/-		01/82 ➧ 12/86	52457641	+	**60949**	864 478 49	M/C
VAN P-SERIE (81-) 7.4	G		A	+/-		01/83 ➧ 12/86	52457641	+	**60949**	864 478 49	M/C
VENTURE (89-) 3.1	G		A	+/-		09/89 ➧			**60962**	670 431 34	P/C
CITROEN LIGHT VAN											
BERLINGO (96-) 1.1 i	G	TU1M	M	-		07/96 ➧ 09/98	1330.07		**63546**	460 378 23	P/A
BERLINGO (96-) 1.1 i	G	TU1M	M	-		10/98 ➧	1330.52	+	**63715**	460 377 23	P/A
BERLINGO (96-) 1.1 i	G	TU1M	M	+		07/96 ➧	1330.08		**63547**	610 378 23	P/A
BERLINGO (96-) 1.4 i	G	TU3JP	M	+/-		07/96 ➧ 09/98	1330.08		**63547**	610 378 23	P/A
BERLINGO (96-) 1.4 i	G	TU3JP	M	+/-		10/98 ➧	1330.47	+	**63716**	610 378 23	P/A
BERLINGO (96-) 1.6 i	G	TU5JP	M	+/-		07/96 ➧	1330.08		**63547**	610 378 23	P/A
BERLINGO (96-) 1.6 i 16V	G	TU5JP4	M	+/-		10/98 ➧	1330.47	+	**63716**	610 378 23	P/A
BERLINGO (96-) 1.8 D	D	XUD7	M	-		06/96 ➧ 10/98	1330.10		**63509A**	667 359 22	P/A
BERLINGO (96-) 1.8 D	D	XUD7	M	-		11/98 ➧	1330.41		**61315A**	667 359 22	P/A
BERLINGO (96-) 1.8 D	D	XUD7	M	+		06/96 ➧ 10/98	1330.24	+	**63508A**	667 359 32	P/A
BERLINGO (96-) 1.8 D	D	XUD7	M	+		10/98 ➧	1330.42	+	**61326A**	667 359 32	P/A
BERLINGO (96-) 1.8 i	G	XU7JB	M	+/-		07/97 ➧ 09/98	1330.08		**63547**	610 378 23	P/A
BERLINGO (96-) 1.8 i	G	XU7JB	M	+/-		10/98 ➧	1330.47		**63716**	610 378 23	P/A
BERLINGO (96-) 1.9 D	D	XUD9,DW8, DW8B	M	-		06/96 ➧ 10/98	1330.10		**63509A**	667 359 22	P/A
BERLINGO (96-) 1.9 D	D	XUD9,DW8, DW8B	M	-		11/98 ➧	1330.41		**61315A**	667 359 22	P/A
BERLINGO (96-) 1.9 D	D	XUD9,DW8, DW8B	M	+		06/96 ➧ 10/98	1330.09		**63508A**	667 359 32	P/A
BERLINGO (96-) 1.9 D	D	XUD9,DW8, DW8B	M	+		11/98 ➧	1330.42	+	**61326A**	667 359 32	P/A
BERLINGO (96-) 2.0 HDi	D	DW10TD	M	+/-		10/99 ➧	1330.42	+	**61326A**	667 359 32	P/A
BERLINGO (02-) 1.1 i	G	TU1JP	M	+/-		12/02 ➧	1330.83	+	**63692A**	380 569 22	P/A
BERLINGO (02-) 1.4 i	G	TU3JP	M	+/-		12/02 ➧	1330.83	+	**63692A**	380 569 22	P/A
BERLINGO (02-) 1.6 i 16V	G	TU5JP4	M	+/-		12/02 ➧	1330.83	+	**63692A**	380 569 22	P/A
BERLINGO (02-) 1.9 D	D	DW8B	M	+/-		12/02 ➧	1330.82	+	**63719A**	380 569 26	P/A
BERLINGO (02-) 2.0 HDi	D	DW10TD	M	+/-		12/02 ➧	1330.82	+	**63719A**	380 569 26	P/A
C 15 (84-) 1.0	G	XV/TU9	M	-		07/88 ➧	1331.QJ	+	**61353**	530 285 22	P/C
C 15 (84-) 1.0	G	XV/TU9	M	-		11/84 ➧ 06/88	95606692		**61190**	510 322 42	P/A
C 15 (84-) 1.1	G	E1A	M	-		07/87 ➧ 06/88	1331.PY	+	**61351**	530 286 33	P/C
C 15 (84-) 1.1	G	E1A	M	-		07/88 ➧	1331.QJ	+	**61353**	530 285 22	P/C
C 15 (84-) 1.1	G	E1A	M	-		11/84 ➧ 06/88	95606692		**61190**	510 322 42	P/A
C 15 (84-) 1.1 i	G	TU1M	M	-		07/87 ➧ 06/88	1331.PY	+	**61351**	530 286 33	P/C
C 15 (84-) 1.1 i	G	TU1M	M	-		07/88 ➧	1331.QJ	+	**61353**	530 285 22	P/C
C 15 (84-) 1.1 i	G	TU1M	M	-		11/84 ➧ 06/88	95606692		**61190**	510 322 42	P/A
C 15 (84-) 1.3	G	G1A	M	-		07/87 ➧ 06/88	1331.PY	+	**61351**	530 286 33	P/C
C 15 (84-) 1.4	G	K3A	M	-		07/88 ➧	1331.QJ	+	**61353**	530 285 22	P/C
C 15 (84-) 1.4	G	K3A	M	-		07/88 ➧	1331.QJ	+	**61353**	530 285 22	P/C
C 15 (84-) 1.4	G	K3A	M	-		11/84 ➧ 06/88	95606691		**61220**	380 322 42	P/A
C 15 (84-) 1.4	G	TU3A	M	-		07/88 ➧	1331.QJ	+	**61353**	530 285 22	P/C
C 15 (84-) 1.4	G	TU3A	M	-		11/84 ➧ 06/88	95606691		**61220**	380 322 42	P/A
C 15 (84-) 1.4	G	XY7	M	-		11/84 ➧ 06/88	95606691		**61220**	380 322 42	P/A
C 15 (84-) 1.4 i	G	TU3FM	M	-		07/88 ➧	1331.QJ	+	**61353**	530 285 22	P/C
C 15 (84-) 1.4 i	G	TU3FM	M	-		11/84 ➧ 06/88	95606691		**61220**	380 322 42	P/A

RADIATORS

	G/D			AC	Note		OE	Nissens	Dim. H W T	Mat.
CITROEN LIGHT VAN (../..)										
C 15 (84-) 1.4 i	G	TU3M	M	-		07/88 ➧	1331.QJ +	**61353**	530 285 22	P/C
C 15 (84-) 1.4 i	G	TU3M	M	-		11/84 ➧ 06/88	95606691	**61220**	380 322 42	P/A
C 15 (84-) 1.8 D	D	XUD7	M	-		04/94 ➧	1301.Y2 +	**61337**	530 287 35	P/C
C 15 (84-) 1.8 D	D	XUD7	M	-		07/88 ➧ 03/94	1331.QH +	**61357**	530 285 36	P/C
C 15 (84-) 1.8 D	D	XUD7	M	-		11/84 ➧ 06/88	1331.PY +	**61351**	530 286 33	P/C
C 15 (84-) 1.9 D	D	XUD7	M	-		04/94 ➧	1301.Y2 +	**61337**	530 287 35	P/C
C 25 (81-) 1.8	G	XM7T	M	-		06/85 ➧ 02/94	1300.G0 +	**63561**	663 415 33	M/C
C 25 (81-) 1.8	G	XM7T	M	-		11/81 ➧ 05/85	1300.G0 +	**63561**	663 415 33	M/C
C 25 (81-) 1.8	G	XN1T	M	-		11/81 ➧ 05/85	1300.G0 +	**63561**	663 415 33	M/C
C 25 (81-) 1.9 D	D	XUD9A	M	-		06/85 ➧ 02/94	ZF07555444	**63557**	663 415 33	M/C
C 25 (81-) 1.9 TD	D	M705T	M	-		07/88 ➧ 02/94	ZF05981189	**63558**	663 414 33	M/C
C 25 (81-) 2.0	G	XN1T	M	-		06/85 ➧ 02/94	1300.G0 +	**63561**	663 415 33	M/C
C 25 (81-) 2.5 D	D	CRD93	M	-		06/85 ➧ 02/94	ZF07555444	**63557**	663 415 33	M/C
C 25 (81-) 2.5 D	D	CRD93	M	-		06/85 ➧ 02/94	5981189	**63569**	663 415 33	M/C
C 25 (81-) 2.5 D	D	CRD93	M	-	TROPIC	11/81 ➧ 02/94	ZF05981189	**63558**	663 414 33	M/C
C 25 (81-) 2.5 D	D	CRD93	M	-		11/81 ➧ 05/85	1300.F7 +	**63572**	825 415 33	M/C
C 25 (81-) 2.5 TD	D	CRD93LS	M	-		07/88 ➧ 02/94	ZF05981189	**63558**	663 414 33	M/C
DISPATCH (95-) 1.6 i	G	SPI	M	-		10/95 ➧	1301.P3	**61875A**	670 446 32	P/A
DISPATCH (95-) 1.6 i	G	SPI	M	+		10/95 ➧	1301.P3	**61875A**	670 446 32	P/A
DISPATCH (95-) 1.9 D	D	DW8	M	-		10/95 ➧	1301.Z0	**61875A**	670 446 32	P/A
DISPATCH (95-) 1.9 D	D	DW8	M	+		10/95 ➧	1301.Y4 +	**61875A**	670 446 32	P/A
DISPATCH (95-) 1.9 D	D	XUD9A	M	-		10/95 ➧	1301.Z0	**61875A**	670 446 32	P/A
DISPATCH (95-) 1.9 D	D	XUD9A	M	+		10/95 ➧	1301.Y4 +	**61875A**	670 446 32	P/A
DISPATCH (95-) 1.9 TD	D	XUDTE	M	+/-		10/95 ➧	1301.Y4 +	**61875A**	670 446 32	P/A
DISPATCH (95-) 2.1 TD	D	XUD11ATE	M	+/-		10/95 ➧	1301.Y4 +	**61875A**	670 446 32	P/A
JUMPER (94-) 1.9 D	D	XUD9AU	M	+/-		02/94 ➧ 01/02	1301.N0 +	**61390A**	790 409 32	P/A
JUMPER (94-) 1.9 TD	D	XUD9UTF	M	+/-		02/94 ➧ 01/02	1301.N0 +	**61390A**	790 409 32	P/A
JUMPER (94-) 2.0	G	XU102C	M	+/-	TROPIC	02/94 ➧ 01/02	1301.JK	**61862**	700 412 24	P/A
JUMPER (94-) 2.0	G	XU10J2U	M	+		02/94 ➧ 01/02	1301.N0 +	**61390A**	790 409 32	P/A
JUMPER (94-) 2.5 D	D	DJ5	M	-		02/94 ➧ 01/02	1301.N0 +	**61390A**	790 409 32	P/A
JUMPER (94-) 2.5 D	D	DJ5	M	+		02/94 ➧ 01/02	1301.N6 +	**61393**	1000414 33	P/C
JUMPER (94-) 2.5 TD	D	DJ5T	M	-		02/94 ➧ 01/02	1330.17	**61390A**	790 409 32	P/A
JUMPER (94-) 2.5 TD	D	DJ5T	M	+		02/94 ➧ 01/02	1301.N6 +	**61393**	1000414 33	P/C
JUMPER (94-) 2.8 D	D	SOFIM	M	+/-		02/94 ➧ 01/02	1301.N0 +	**61390A**	790 409 32	P/A
JUMPER (94-) 2.8 HDi	D	8140-43/63	M	+/-		02/94 ➧ 01/02	1301.HQ +	**61390A**	790 409 32	P/A
JUMPER (94-) 2.8 TD	D	8140-43/63	M	+/-		02/94 ➧ 01/02	1330.17	**61390A**	790 409 32	P/A
JUMPER (02-) 2.0 HDi	D	DW10JTD	M	-		01/02 ➧	1330.97	**61390A**	790 409 32	P/A
JUMPER (02-) 2.0 HDi	D	DW10JTD	M	+		01/02 ➧	1330.98	**61390A**	790 409 32	P/A
JUMPER (02-) 2.2 HDi	D	DW12TED4	M	-		01/02 ➧	1329227080 +	**61390A**	790 409 32	P/A
JUMPER (02-) 2.2 HDi	D	DW12TED4	M	+		01/02 ➧	1330.98	**61390A**	790 409 32	P/A
JUMPER (02-) 2.8 HDi	D	F28TDCR	M	-		01/02 ➧	1329227080 +	**61390A**	790 409 32	P/A
JUMPER (02-) 2.8 HDi	D	F28TDCR	M	+		01/02 ➧	1330.98	**61390A**	790 409 32	P/A
JUMPY (95-) 1.6 i	G	SPI	M	+		10/95 ➧	1301.P3	**61875A**	670 446 32	P/A
JUMPY (95-) 1.9 D	D	DW8	M	-		10/95 ➧	1301.Z0	**61875A**	670 446 32	P/A
JUMPY (95-) 1.9 D	D	DW8	M	+		10/95 ➧	1301.Y4 +	**61875A**	670 446 32	P/A
JUMPY (95-) 1.9 D	D	XUD9A	M	-		10/95 ➧	1301.Z0	**61875A**	670 446 32	P/A
JUMPY (95-) 1.9 D	D	XUD9A	M	+		10/95 ➧	1301.Y4 +	**61875A**	670 446 32	P/A
JUMPY (95-) 1.9 TD	D	XUDTE	M	+/-		10/95 ➧	1301.Y4 +	**61875A**	670 446 32	P/A
JUMPY (95-) 2.1 TD	D	XUD11ATE	M	+/-		10/95 ➧	1301.Y4 +	**61875A**	670 446 32	P/A

RADIATORS

	G/D			AC	Note		OE	Nissens	Dim. H W T	Mat.
CITROEN LIGHT VAN (../..)										
LNA (82-) 1.1	G	XW7	M	-		07/82 ➧	91513957	**63600**	510 220 30	P/C
RELAY (02-) 2.0 HDi	D	DW10JTD	M	-		01/02 ➧	1330.97	**61390A**	790 409 32	P/A
RELAY (02-) 2.0 HDi	D	DW10JTD	M	+		01/02 ➧	1330.98	**61390A**	790 409 32	P/A
RELAY (02-) 2.2 HDi	D	DW12TED4	M	-		01/02 ➧	1329227080 +	**61390A**	790 409 32	P/A
RELAY (02-) 2.2 HDi	D	DW12TED4	M	+		01/02 ➧	1330.98	**61390A**	790 409 32	P/A
RELAY (02-) 2.8 HDi	D	F28TDCR	M	-		01/02 ➧	1329227080 +	**61390A**	790 409 32	P/A
RELAY (02-) 2.8 HDi	D	F28TDCR	M	+		01/02 ➧	1330.98	**61390A**	790 409 32	P/A
RELAY (94-) 1.9 D	D	XUD9AU	M	+/-		02/94 ➧ 01/02	1301.N0 +	**61390A**	790 409 32	P/A
RELAY (94-) 1.9 TD	D	XUD9UTF	M	+/-		02/94 ➧ 01/02	1301.N0 +	**61390A**	790 409 32	P/A
RELAY (94-) 2.0	G	XU102C	M	+/-		02/94 ➧ 01/02	1301.JK	**61862**	700 412 24	P/A
RELAY (94-) 2.0	G	XU10J2U	M	+		02/94 ➧ 01/02	1301.N0 +	**61390A**	790 409 32	P/A
RELAY (94-) 2.5 D	D	DJ5	M	-		02/94 ➧ 01/02	1301.N0 +	**61390A**	790 409 32	P/A
RELAY (94-) 2.5 D	D	DJ5	M	+		02/94 ➧ 01/02	1301.N6 +	**61393**	1000414 33	P/C
RELAY (94-) 2.5 TD	D	DJ5T	M	-		02/94 ➧ 01/02	1330.17	**61390A**	790 409 32	P/A
RELAY (94-) 2.5 TD	D	DJ5T	M	+		02/94 ➧ 01/02	1301.N6 +	**61393**	1000414 33	P/C
RELAY (94-) 2.8 D	D	2798	M	+/-		02/94 ➧ 01/02	1301.N0 +	**61390A**	790 409 32	P/A
RELAY (94-) 2.8 HDi	D	8140-43/63	M	+/-		02/94 ➧ 01/02	1301.HQ +	**61390A**	790 409 32	P/A
RELAY (94-) 2.8 TD	D	8140-43/63	M	+/-		02/94 ➧ 01/02	1330.17	**61390A**	790 409 32	P/A
FIAT LIGHT VAN										
DOBLO (01-) 1.2 i	G	223 A5.000	M	-		03/01 ➧	46749000	**61769**	580 320 17	P/A
DOBLO (01-) 1.2 i	G	223 A5.000	M	+		03/01 ➧	46749003 +	**61768**	580 318 18	P/A
DOBLO (01-) 1.3 JTD	D	188 A9.000	M	-		01/03 ➧	46807378	**61765**	700 306 26	P/A
DOBLO (01-) 1.3 JTD	D	188 A9.000	M	+		01/03 ➧	46807378	**61765**	700 306 26	P/A
DOBLO (01-) 1.4 i	G	350 A1.000	M	-		10/01 ➧	46803039	**61767**	642 415 30	P/A
DOBLO (01-) 1.4 i	G	350 A1.000	M	+		10/01 ➧	46803035	**61766**	648 398 26	P/A
DOBLO (01-) 1.6 i 16V	G	182 B6.000	M	-		09/05 ➧	46803039	**61767**	642 415 30	P/A
DOBLO (01-) 1.6 i 16V	G	182 B6.000	M	-		10/01 ➧ 08/05	46749000	**61769**	580 320 17	P/A
DOBLO (01-) 1.6 i 16V	G	182 B6.000	M	+		09/05 ➧	46803035	**61766**	648 398 26	P/A
DOBLO (01-) 1.6 i 16V	G	182 B6.000	M	+		10/01 ➧ 05/05	46749003 +	**61768**	580 318 18	P/A
DOBLO (01-) 1.9 D	D	223 A6.000	M	-		03/01 ➧	46749005 +	**61767**	642 415 30	P/A
DOBLO (01-) 1.9 D	D	223 A6.000	M	+		03/01 ➧	46749018 +	**61766**	648 398 26	P/A
DOBLO (01-) 1.9 JTD	D	182 B9.000	M	-		10/01 ➧	46807378	**61765**	700 306 26	P/A
DOBLO (01-) 1.9 JTD	D	182 B9.000	M	+		10/01 ➧	46807378	**61765**	700 306 26	P/A
DUCATO (81-) 1.8	G	XM7T	M	-		11/81 ➧	1300.G0 +	**63561**	663 415 33	M/C
DUCATO (81-) 1.9 D	D	XUD9A	M	-		11/81 ➧	1300.J9	**63557**	663 415 33	M/C
DUCATO (81-) 1.9 TD	D	1929 F280A	M	-		01/81 ➧	5981189	**63558**	663 414 33	M/C
DUCATO (81-) 2.0	G	XN1T	M	-		11/81 ➧	1300.G0 +	**63561**	663 415 33	M/C
DUCATO (81-) 2.5 D	D	2499 CRD3	M	-		11/81 ➧	1300.F7 +	**63572**	825 415 33	M/C
DUCATO (81-) 2.5 D	D	2499 CRD3	M	-		11/81 ➧	5981189 +	**63569**	663 415 33	M/C
DUCATO (81-) 2.5 TD	D	2499 CRD3	M	-		11/81 ➧	5981189	**63558**	663 414 33	M/C
DUCATO (94-) 1.9 D	D	D9B	M	+/-		02/94 ➧ 01/02	1301.N0 +	**61390A**	790 409 32	P/A
DUCATO (94-) 1.9 TD	D	XUD9TF	M	-		02/94 ➧ 01/02	1307392080	**61862**	700 412 24	P/A
DUCATO (94-) 1.9 TD	D	XUD9TF	M	+		02/94 ➧ 01/02	1301.N0 +	**61390A**	790 409 32	P/A
DUCATO (94-) 2.0 i	G	RFW	M	+		02/94 ➧ 01/02	1301.N0 +	**61390A**	790 409 32	P/A
DUCATO (94-) 2.0 JTD	D	DW10TD	M	-		02/94 ➧ 01/02	1301.N0 +	**61390A**	790 409 32	P/A
DUCATO (94-) 2.0 JTD	D	DW10TD	M	+		02/94 ➧ 01/02	1327478080 +	**61390A**	790 409 32	P/A
DUCATO (94-) 2.5 D	D	8140.67	M	-		02/94 ➧ 08/98	1301.N0 +	**61390A**	790 409 32	P/A
DUCATO (94-) 2.5 D	D	8140.67	M	+		02/94 ➧ 01/02	1311521080 +	**61393**	1000414 33	P/C
DUCATO (94-) 2.5 JTD	D	8140.47	M	-		02/94 ➧ 01/02	1301.N0 +	**61390A**	790 409 32	P/A

RADIATORS

	G/D			AC	Note		OE	Nissens	Dim. H W T	Mat.
FIAT LIGHT VAN (../..)										
DUCATO (94-) 2.5 JTD	D	8140.47	M	+		02/94 ➧ 01/02	1311521080 +	**61393**	1000 414 33	P/C
DUCATO (94-) 2.5 TD	D	8140.47	M	-		02/94 ➧ 01/02	1301.N0 +	**61390A**	790 409 32	P/A
DUCATO (94-) 2.5 TD	D	8140.47	M	+		02/94 ➧ 01/02	1311521080 +	**61393**	1000 414 33	P/C
DUCATO (94-) 2.8 D	D	8140.63	M	+/-		02/94 ➧ 01/02	1301.N0 +	**61390A**	790 409 32	P/A
DUCATO (94-) 2.8 JTD	D	8140.43S	M	+/-		02/94 ➧ 11/01	1301.N0 +	**61390A**	790 409 32	P/A
DUCATO (94-) 2.8 TD	D	8140.43	M	+/-		02/94 ➧ 11/01	1301.N0 +	**61390A**	790 409 32	P/A
DUCATO (02-) 2.0 JTD	D	DW10TD	M	-		01/02 ➧	1329227080 +	**61390A**	790 409 32	P/A
DUCATO (02-) 2.0 JTD	D	DW10TD	M	+		01/02 ➧	1329225080 +	**61390A**	790 409 32	P/A
DUCATO (02-) 2.2 JTD	D	2179 DW12TED	M	-		01/02 ➧	1329227080 +	**61390A**	790 409 32	P/A
DUCATO (02-) 2.2 JTD	D	2179 DW12TED	M	+		01/02 ➧	1329225080 +	**61390A**	790 409 32	P/A
DUCATO (02-) 2.3 JTD	D	F1AE0481C	M	-		01/02 ➧	1329227080 +	**61390A**	790 409 32	P/A
DUCATO (02-) 2.3 JTD	D	F1AE0481C	M	+		01/02 ➧	1329225080 +	**61390A**	790 409 32	P/A
DUCATO (02-) 2.8 JTD	D	8140.43S	M	-		01/02 ➧	1329227080 +	**61390A**	790 409 32	P/A
DUCATO (02-) 2.8 JTD	D	8140.43S	M	+		01/02 ➧	1329225080 +	**61390A**	790 409 32	P/A
DUCATO (02-) 2.8 TD	D	8140.43S	M	-		01/02 ➧	1327478080 +	**61390A**	790 409 32	P/A
FIORINO (79-) 1.3 D	D	127 A5.000	M	-		02/81 ➧ 07/88	7503277	**61670**	548 320 33	M/C
FIORINO (79-) 1050	G	127 A.000	M	-		01/79 ➧ 04/83	5975062	**61880**	310 396 40	P/A
FIORINO (79-) 1050	G	127 A.000	M	-		05/83 ➧ 07/88	7500726	**61860**	310 396 33	P/A
FIORINO (88-) 1.1	G	146 A9.000	M	-		08/88 ➧	7652127	**61853**	441 322 42	P/A
FIORINO (88-) 1.3	G	1301	M	-		08/88 ➧	7652127	**61853**	441 322 42	P/A
FIORINO (88-) 1.4 i	G	146 C5.000	M	-		08/88 ➧	7685063	**61852**	520 322 42	P/A
FIORINO (88-) 1.5 i	G	146 C6.000	M	-		08/88 ➧	7685063	**61852**	520 322 42	P/A
FIORINO (88-) 1.6 i	G	146 C6.000	M	-		08/88 ➧	7685063	**61852**	520 322 42	P/A
FIORINO (88-) 1.7 D	D	149 B3.000	M	-		07/93 ➧	7693062	**61931**	520 322 34	P/A
FIORINO (88-) 1.7 D	D	149 B3.000	M	-		08/88 ➧ 06/93	7586746	**61848**	610 320 42	P/A
FIORINO (88-) 1.7 TD	D	146 D7.000	M	-		07/93 ➧	50010242 +	**61873**	554 374 34	P/A
SCUDO (96-) 1.6 i	G	220 A2.000	M	-		07/95 ➧	1471463080	**61396**	600 470 23	P/A
SCUDO (96-) 1.6 i	G	220 A2.000	M	+		07/95 ➧	1474401080	**61875A**	670 446 32	P/A
SCUDO (96-) 1.9 D	D	D9B	M	-		07/95 ➧	1476529080	**61875A**	670 446 32	P/A
SCUDO (96-) 1.9 D	D	D9B	M	+		07/95 ➧	1301.Y4 +	**61875A**	670 446 32	P/A
SCUDO (96-) 1.9 TD	D	D8B	M	+/-		07/95 ➧	1301.Y4 +	**61875A**	670 446 32	P/A
SCUDO (96-) 2.0 i 16V	G	RFN	M	-		07/95 ➧	1471463080	**61396**	600 470 23	P/A
SCUDO (96-) 2.0 i 16V	G	RFN	M	+		07/95 ➧	1474401080	**61875A**	670 446 32	P/A
TALENTO (89-) 1.9 D	D	XN1T	M	-		03/89 ➧ 03/94	1300.J9	**63557**	663 415 33	M/C
TALENTO (89-) 2.0	G	XN1T	M	-		03/89 ➧ 03/94	1300.G0 +	**63561**	663 415 33	M/C
FORD LIGHT VAN										
EXPLORER (91-) 4.0 i	G		A	+/-		01/91 ➧ 11/94	3313267 +	**620671**	458 439 50	P/A
EXPLORER (91-) 4.0 i	G		A	+/-		01/91 ➧ 11/94	3313267 +	**62067A**	458 439 50	P/A
EXPLORER (91-) 4.0 i	G		A	+/-		09/96 ➧ 09/00	3787236 +	**62060**	527 606 26	P/C
EXPLORER (91-) 4.0 i	G		A	+/-		12/94 ➧ 08/96	3893717 +	**62061**	508 546 52	P/A
F-SERIE (83-) 6.9	G		A	+/-		01/83 ➧ 12/94	E3TH8005KA	**62071**	600 768 49	P/C
F-SERIE (83-) 7.3	G		A	+/-		01/83 ➧ 12/94	E3TH8005KA	**62071**	600 768 49	P/C
MAVERICK (93-) 2.4 i	G	KA24E	M	+/-		02/93 ➧ 05/96	1953240	**62070A**	455 649 32	P/A
MAVERICK (93-) 2.7 TDi	D	TD27T	M	+/-		02/93 ➧ 05/96	1953239	**62069A**	455 649 32	P/A
MAVERICK (96-) 2.7 TDi	D	TD27T	M	+/-		05/96 ➧	1958982	**68708A**	500 649 26	A/A
MAVERICK (96-) 2.7 TDi	D	TD27T	A	+/-		05/96 ➧		**68709A**	500 649 26	A/A
MAVERICK (02-) 2.0 i 16V	G		M/A	+/-		09/02 ➧	4119589 +	**62004**	700 467 26	P/A

RADIATORS

	G/D			AC	Note		OE	Nissens	Dim. H W T	Mat.
FORD LIGHT VAN (../..)										
MAVERICK (02-) 2.3 i 16V	G		M/A	+/-		09/02 ➧	4119589 +	**62004**	700 467 26	P/A
MAVERICK (02-) 3.0 i V6 24V	G		M/A	+/-		09/02 ➧	4098943 +	**62003**	700 467 26	P/A
PICKUP F-SER (85-) 4.9	G		A			/87 ➧ /94	F2TH8005LA	**62103**	702 451 33	P/C
PICKUP F-SER (85-) 4.9	G		A	+/-		/85 ➧ /86	F2TH8005LA	**62103**	702 451 33	P/C
PICKUP F-SER (85-) 5.0	G		A		W HDC	/85 ➧ /86	E5TH8005ABA+	**62098**	702 468 52	P/C
PICKUP F-SER (85-) 5.0	G		A		W HDC	/85 ➧ /86	E5TH8005ABA+	**620981**	702 468 52	P/A
PICKUP F-SER (85-) 5.0	G		A		W HDC	/89 ➧ /89	E5TH8005ABA+	**62098**	702 468 52	P/C
PICKUP F-SER (85-) 5.0	G		A	+/-	WO HDC	/85 ➧ /94	E5TH8005ABA+	**62098**	702 468 52	P/C
PICKUP F-SER (85-) 5.8	G		A		W HDC	/85 ➧ /86	E5TH8005ABA+	**62098**	702 468 52	P/C
PICKUP F-SER (85-) 5.8	G		A	+/-	WO HDC	/85 ➧ /94	E5TH8005ABA+	**62098**	702 468 52	P/C
PICKUP F-SER (85-) 6.9	D		A	+/-		01/83 ➧ 12/87	E3TH8005KA+	**62071**	600 768 49	P/C
PICKUP F-SER (85-) 7.3	D		A	+/-		01/87 ➧ 12/95	E3TH8005KA+	**62071**	600 768 49	P/C
RANGER (98-) 2.5 D	D	WL	M/A	+/-		06/98 ➧	3599738 +	**62246**	450 639 26	P/A
RANGER (98-) 2.5 D	D	WL	M/A	+/-		06/98 ➧	3599738 +	**62246A**	450 639 26	P/A
RANGER (98-) 2.5 TD	D	WLT	M/A	+/-		01/03 ➧	3599738 +	**62246**	450 639 26	P/A
RANGER (98-) 2.5 TD	D	WLT	M/A	+/-		06/98 ➧ 01/03	3599738 +	**62246**	450 639 26	P/A
RANGER (98-) 2.9 D	D		M/A	+/-		06/98 ➧	3599738 +	**62246**	450 639 26	P/A
SIERRA PICKUP (87-) 1.8 TD	D	D18T	M	-		10/87 ➧ 04/93	1659344 +	**62208**	600 390 42	P/C
SIERRA PICKUP (87-) 2.0 i	G		M	-		10/87 ➧ 04/93	1652501 +	**62178**	607 345 33	P/C
TRANSIT (78-) 2.4 D	D	D24	M	-		01/78 ➧ 01/82	1575611 +	**62340**	680 430 33	M/C
TRANSIT (78-) 2.4 D	D	D24	M	-		02/82 ➧ 08/83	6103493 +	**62370**	680 430 33	M/C
TRANSIT (78-) 2.4 D	D	D24	M	-		08/83 ➧ 12/84	6124011 +	**62371**	680 430 33	M/C
TRANSIT (78-) 2.5 D	D	D25	M	-		03/84 ➧ 11/85	6124011 +	**62371**	680 430 33	M/C
TRANSIT (86-) 1.6	G	TL16	M	-		11/85 ➧ 08/91	6160271 +	**62369A**	600 329 32	P/A
TRANSIT (86-) 1.6	G	TL16	A	-		10/88 ➧ 08/91	6176831 +	**62366A**	600 329 32	P/A
TRANSIT (86-) 1.6	G	TL16	A	-		11/85 ➧ 10/88	1641901 +	**62367A**	600 329 32	P/A
TRANSIT (86-) 2.0	G	TL20/TL20I	M	-		11/85 ➧ 08/91	6160271 +	**62369A**	600 329 32	P/A
TRANSIT (86-) 2.0	G	TL20/TL20I	A	-		10/88 ➧ 08/91	6176831 +	**62366A**	600 329 32	P/A
TRANSIT (86-) 2.0	G	TL20/TL20I	A	-		11/85 ➧ 10/88	1641901 +	**62367A**	600 329 32	P/A
TRANSIT (86-) 2.5 D	D	D25	M	-		11/85 ➧ 08/91	6160271 +	**62369A**	600 329 32	P/A
TRANSIT (86-) 2.5 D	D	D25	A	-		10/88 ➧ 08/91	6176831 +	**62366A**	600 329 32	P/A
TRANSIT (86-) 2.5 D	D	D25	A	-		11/85 ➧ 10/88	1641901 +	**62367A**	600 329 32	P/A
TRANSIT (92-) 2.0 EFi	G	TL20	M	-		08/91 ➧ 08/94	1040077 +	**62177A**	600 329 32	P/A
TRANSIT (92-) 2.5 D	D	D25NA	M	-		08/91 ➧ 08/94	1040077 +	**62177A**	600 329 32	P/A
TRANSIT (92-) 2.5 TD	D	TD25NA	M	-		08/91 ➧ 08/94	6912241 +	**62249A**	600 359 40	P/A
TRANSIT (94-) 2.0 EFi	G		M	-		08/94 ➧	1030491 +	**62049**	600 335 43	P/A
TRANSIT (94-) 2.0 EFi	G		M	+		08/94 ➧	1112702 +	**62048**	703 360 42	P/A
TRANSIT (94-) 2.5 D	D		M	-		08/94 ➧	7045715 +	**62241A**	600 329 40	P/A
TRANSIT (94-) 2.5 D	D		M	+		08/94 ➧	1112703 +	**62057A**	702 359 40	P/A
TRANSIT (94-) 2.5 TD	D		M	-		08/94 ➧	7045714 +	**62081A**	600 362 40	P/A
TRANSIT (94-) 2.5 TD	D		M	+		08/94 ➧	1112703 +	**62057A**	702 359 40	P/A
TRANSIT (94-) 2.5 TD	D		A	-		08/94 ➧	7045712 +	**62243**	600 360 42	P/A
TRANSIT (94-) 2.5 TD	D		A	+		08/94 ➧	1112704 +	**62058A**	702 359 40	P/A
TRANSIT (94-) 2.5 TDi	D		M	-		10/96 ➧	1023920 +	**62080A**	538 359 40	P/A
TRANSIT (94-) 2.5 TDi	D		M	+		08/94 ➧	1023920 +	**62080A**	538 359 40	P/A
TRANSIT (00-) 2.0 D 75 HP	D		M	+/-		08/00 ➧	1C1H8005FD+	**62046A**	770 389 26	P/A
TRANSIT (00-) 2.0 D 85 HP	D		M	+/-		08/00 ➧	1C1H8005FD+	**62046A**	770 389 26	P/A
TRANSIT (00-) 2.0 D 100 HP	D		M	+/-		08/00 ➧	1C1H8005FD+	**62046A**	770 389 26	P/A
TRANSIT (00-) 2.0 TDCI 125 HP	D		M	+/-		08/00 ➧	1C1H8005FD+	**62046A**	770 389 26	P/A

RADIATORS

	G/D			AC	Note		OE	Nissens	Dim. H W T	Mat.
FORD LIGHT VAN (../..)										
TRANSIT (00-) 2.3 i 16V	G		M	+/-		01/00 ➧	1104320 +	**62043A**	770 389 26	P/A
TRANSIT (00-) 2.4 D 75 HP	D		M	-		01/00 ➧	1104319 +	**62044A**	620 389 26	P/A
TRANSIT (00-) 2.4 D 75 HP	D		M	+		01/00 ➧	1104320 +	**62043A**	770 389 26	P/A
TRANSIT (00-) 2.4 D 90 HP	D		M	-		01/00 ➧	1104319 +	**62044A**	620 389 26	P/A
TRANSIT (00-) 2.4 D 90 HP	D		M	+		01/00 ➧	1104320 +	**62043A**	770 389 26	P/A
TRANSIT (00-) 2.4 D 115 HP	D		M	-		01/00 ➧	1104319 +	**62044A**	620 389 26	P/A
TRANSIT (00-) 2.4 D 115 HP	D		M	+		07/00 ➧	1103120 +	**62043A**	770 389 26	P/A
TRANSIT (00-) 2.4 D 120 HP	D		M	-		01/00 ➧	1104319 +	**62044A**	620 389 26	P/A
TRANSIT (00-) 2.4 D 120 HP	D		M	+		07/00 ➧	1103120 +	**62043A**	770 389 26	P/A
TRANSIT (00-) 2.4 D 125 HP	D		M	-		01/00 ➧	1104319 +	**62044A**	620 389 26	P/A
TRANSIT (00-) 2.4 D 125 HP	D		M	+		07/00 ➧	1103120 +	**62043A**	770 389 26	P/A
TRANSIT (00-) 2.4 TDCI 135 HP	D		M	-		03/04 ➧	1104319 +	**62044A**	620 389 26	P/A
TRANSIT (00-) 2.4 TDCI 135 HP	D		M	+		03/04 ➧	1103120 +	**62043A**	770 389 26	P/A
TRANSIT CONNECT (02-) 1.8 Di	D		M	-		05/02 ➧	2T148005AD+	**62156A**	620 389 26	P/A
TRANSIT CONNECT (02-) 1.8 Di	D		M	-		08/02 ➧	2T148005AD+	**62156A**	620 389 26	P/A
TRANSIT CONNECT (02-) 1.8 Di	D		M	+	75 HP	05/02 ➧	4367092	**62021A**	703 389 26	P/A
TRANSIT CONNECT (02-) 1.8 Di	D		M	+	90 HP	08/02 ➧	4367092	**62021A**	703 389 26	P/A
TRANSIT CONNECT (02-) 1.8 i 16V	G		M	-		05/02 ➧	2T148005AD+	**62156A**	620 389 26	P/A
TRANSIT CONNECT (02-) 1.8 i 16V	G		M	+		05/02 ➧	4367092	**62021A**	703 389 26	P/A
TRANSIT CONNECT (02-) 1.8 TDCi	D		M	+	75 HP	08/02 ➧	4523720 +	**62015A**	703 389 26	P/A
TRANSIT CONNECT (02-) 1.8 TDCi	D		M	+	90 HP	08/02 ➧	4523720 +	**62015A**	703 389 26	P/A
FORD USA LIGHT VAN										
AEROSTAR (85-) 2.3	G		M/A	+/-		01/85 ➧	E59H8005BA+	**62109**	572 448 21	P/C
AEROSTAR (85-) 2.8	G		M/A	+/-		01/85 ➧	E59H8005BA+	**62109**	572 448 21	P/C
AEROSTAR (85-) 3.0	G		M/A	+/-		01/85 ➧	E59H8005BA+	**62109**	572 448 21	P/C
AEROSTAR (85-) 4.0	G		M/A	+/-		01/85 ➧	F09H8005AA+	**62108**	572 468 52	P/C
BRONCO (85-) 2.9	G		M/A	+/-		01/85 ➧	E7TZ8005D	**62096**	455 451 33	P/C
BRONCO (85-) 4.9	G		M/A	+/-		01/85 ➧	F2TH8005LA+	**62103**	702 451 33	P/C
BRONCO (85-) 5.0	G		M/A	+/-		01/85 ➧	52TH8005ZA+	**62038**	702 451 48	P/A
BRONCO (85-) 5.0	G		M/A	+/-		01/85 ➧	52TH8005ZA+	**62098**	702 468 52	P/C
BRONCO (85-) 5.0	G		M/A	+/-		01/85 ➧	52TH8005ZA+	**620981**	702 468 52	P/A
BRONCO (85-) 5.8	G		M/A	+/-		01/85 ➧	52TH8005ZA+	**62038**	702 451 48	P/A
BRONCO (92-) 4.9	G		M/A	+/-		01/92 ➧	F2TH8005LA+	**62103**	702 451 33	P/C
BRONCO (92-) 5.0	G		M/A	+/-		01/92 ➧	52TH8005ZA+	**62038**	702 451 48	P/A
BRONCO (92-) 5.0	G		M/A	+/-		01/92 ➧	52TH8005ZA+	**62098**	702 468 52	P/C
BRONCO (92-) 5.0	G		M/A	+/-		01/92 ➧	52TH8005ZA+	**620981**	702 468 52	P/A
BRONCO (92-) 5.0	G		M/A	+/-		01/92 ➧	52TH8005ZA+	**62038**	702 451 48	P/A
F150 (92-) 4.9	G		M/A	+/-		01/92 ➧	F2TH8005LA+	**62103**	702 451 33	P/C
F150 (92-) 5.0	G		M/A	+/-		01/92 ➧	52TH8005ZA+	**62038**	702 451 48	P/A
F150 (92-) 5.0	G		M/A	+/-		01/92 ➧	52TH8005ZA+	**62098**	702 468 52	P/C
F150 (92-) 5.0	G		M/A	+/-		01/92 ➧	52TH8005ZA+	**620981**	702 468 52	P/A
F150 (92-) 5.8	G		M/A	+/-		01/92 ➧	52TH8005ZA+	**62038**	702 451 48	P/A
F250 (92-) 4.9	G		M/A	+/-		01/92 ➧	F2TH8005LA+	**62103**	702 451 33	P/C
F250 (92-) 5.0	G		M/A	+/-		01/92 ➧	52TH8005ZA+	**62038**	702 451 48	P/A
F250 (92-) 5.0	G		M/A	+/-		01/92 ➧	52TH8005ZA+	**62098**	702 468 52	P/C
F250 (92-) 5.0	G		M/A	+/-		01/92 ➧	52TH8005ZA+	**620981**	702 468 52	P/A
F250 (92-) 5.8	G		M/A	+/-		01/92 ➧	52TH8005ZA+	**62038**	702 451 48	P/A
F250 (92-) 7.5	G		M/A	+/-		01/92 ➧	52TH8005ZA+	**62038**	702 451 48	P/A

RADIATORS

	G/D			AC	Note		OE	Nissens	Dim. H W T	Mat.
FORD USA LIGHT VAN (../..)										
F250 SUPER DUTY (99-) 5.4	G		M/A	+/-		01/99 ➧	F81Z8005FA	**69206**	672 768 56	P/A
F250 SUPER DUTY (99-) 6.8	G		M/A	+/-		01/99 ➧	YC3Z8005BA+	**69205**	672 768 56	P/A
F250 SUPER DUTY (99-) 7.3 TD	D		M/A	+/-		01/99 ➧	YC3Z8005BA+	**69205**	672 768 56	P/A
F350 (92-) 4.9	G		M/A	+/-		01/92 ➧	F2TH8005LA+	**62103**	702 451 33	P/C
F350 (92-) 5.0	G		M/A	+/-		01/92 ➧	52TH8005ZA+	**62038**	702 451 48	P/A
F350 (92-) 5.0	G		M/A	+/-		01/92 ➧	52TH8005ZA+	**62098**	702 468 52	P/C
F350 (92-) 5.0	G		M/A	+/-		01/92 ➧	52TH8005ZA+	**620981**	702 468 52	P/A
F350 (92-) 5.8	G		M/A	+/-		01/92 ➧	52TH8005ZA+	**62038**	702 451 48	P/A
F350 (92-) 7.5	G		M/A	+/-		01/92 ➧	52TH8005ZA+	**62038**	702 451 48	P/A
F350 SUPER DUTY (99-) 5.4	G		M/A	+/-		01/99 ➧	F81Z8005FA	**69206**	672 768 56	P/A
F350 SUPER DUTY (99-) 6.8	G		M/A	+/-		01/99 ➧	YC3Z8005BA+	**69205**	672 768 56	P/A
F350 SUPER DUTY (99-) 7.3 TD	D		M/A	+/-		01/99 ➧	YC3Z8005BA+	**69205**	672 768 56	P/A
F450 (92-) 7.5	G		M/A	+/-		01/92 ➧	52TH8005ZA+	**62038**	702 451 48	P/A
F450 (92-) 7.5	G		M/A	+/-		01/92 ➧	52TH8005ZA+	**62098**	702 468 52	P/C
F450 (92-) 7.5	G		M/A	+/-		01/92 ➧	52TH8005ZA+	**620981**	702 468 52	P/A
F450 SUPER DUTY (99-) 6.8	G		M/A	+/-		01/99 ➧	YC3Z8005BA+	**69205**	672 768 56	P/A
F450 SUPER DUTY (99-) 7.3 TD	D		M/A	+/-		01/99 ➧	YC3Z8005BA+	**69205**	672 768 56	P/A
F550 SUPER DUTY (99-) 6.8	G		M/A	+/-		01/99 ➧	YC3Z8005BA+	**69205**	672 768 56	P/A
F550 SUPER DUTY (99-) 7.3 TD	D		M/A	+/-		01/99 ➧	YC3Z8005BA+	**69205**	672 768 56	P/A
RANGER (85-) 2.9	G		M/A	+/-		01/85 ➧	E7TZ8005D	**62096**	455 451 33	P/C
RANGER (85-) 4.9	G		M/A	+/-		01/85 ➧	F2TH8005LA+	**62103**	702 451 33	P/C
RANGER (85-) 5.0	G		M/A	+/-		01/85 ➧	52TH8005ZA+	**62038**	702 451 48	P/A
RANGER (85-) 5.0	G		M/A	+/-		01/85 ➧	52TH8005ZA+	**62098**	702 468 52	P/C
RANGER (85-) 5.0	G		M/A	+/-		01/85 ➧	52TH8005ZA+	**620981**	702 468 52	P/A
RANGER (85-) 5.8	G		M/A	+/-		01/85 ➧	52TH8005ZA+	**62038**	702 451 48	P/A
RANGER PICKUP (93-) 2.3	G		M/A	+/-		01/93 ➧	F57H8005JC+	**62035**	438 546 57	P/A
RANGER PICKUP (93-) 3.0	G		M/A	+/-		01/93 ➧	F57H8005JC+	**62035**	438 546 57	P/A
RANGER PICKUP (93-) 4.0	G		M/A	+/-		01/93 ➧	F57H8005JC+	**62035**	438 546 57	P/A
RANGER PICKUP (98-) 3.0 i V6	G		M/A	+/-		01/98 ➧ 12/00	F67Z 8005 CA+	**69203**	526 592 26	P/A
RANGER PICKUP (98-) 4.0 i V6	G		M/A	+/-		01/98 ➧ 12/00	F67Z 8005 CA+	**69203**	526 592 26	P/A
GMC LIGHT VAN										
ENVOY (94-) 2.2	G		A	+/-		01/94 ➧ 12/95	52462547 +	**60915A**	667 379 32	P/A
ENVOY (94-) 2.2	G		A	+/-		01/96 ➧	52472963 +	**609361**	667 379 32	P/A
ENVOY (94-) 2.2	G		A	+/-		01/96 ➧	52472963	**60936A**	667 379 32	P/A
ENVOY (94-) 4.3	G		A	+/-		01/94 ➧ 12/95	52462547 +	**60915A**	667 379 32	P/A
ENVOY (94-) 4.3	G		A	+/-		01/96 ➧	52472963 +	**609361**	667 379 32	P/A
ENVOY (01-) 4.2	G		A	+/-		01/01 ➧	52485546	**69211**	460 678 24	P/C
JIMMY (82-) 2.8	G		M	+/-		01/82 ➧ 12/89	3048771 +	**60960**	600 368 33	P/C
JIMMY (82-) 4.3	G		A	+/-	EOC	01/88 ➧ 12/93	52450025 +	**60968A**	667 379 32	P/A
JIMMY (82-) 5.0	G		A	+/-		01/81 ➧ 12/87	3043877 +	**60971**	720 481 41	M/C
JIMMY (82-) 5.0	G		A	+/-		01/83 ➧ 12/87	3049127 +	**60974**	720 431 34	M/C
JIMMY (82-) 5.7	G		A	+/-		01/83 ➧ 12/91	3043877 +	**60971**	720 481 41	M/C
JIMMY (82-) 5.7	G		A	+/-		01/83 ➧ 12/91	3049127 +	**60974**	720 431 34	M/C
JIMMY (82-) 5.7	G		A	+/-		01/88 ➧ 12/91	3043874 +	**60970**	720 431 19	M/C
JIMMY (82-) 5.7	G		A	+/-		01/88 ➧ 12/91	3043874 +	**60970A**	720 439 32	P/A
JIMMY (82-) 6.2 D	D		A	+/-		01/82 ➧ 12/91	52457641 +	**60949**	864 478 49	M/C

RADIATORS

	G/D			AC	Note		OE		Nissens	Dim. H	W	T	Mat.
GMC LIGHT VAN (../..)													
JIMMY (94-) 2.2	G		A	+/-		01/94 ➧ 12/95	52462547	+	**60915A**	667	379	32	P/A
JIMMY (94-) 2.2	G		A	+/-		01/96 ➧	52472963	+	**609361**	667	379	32	P/A
JIMMY (94-) 2.2	G		A	+/-		01/96 ➧	52472963		**60936A**	667	379	32	P/A
JIMMY (94-) 4.3	G		A	+/-		01/94 ➧ 12/95	52462547	+	**60915A**	667	379	32	P/A
JIMMY (94-) 4.3	G		A	+/-		01/96 ➧	52472963	+	**609361**	667	379	32	P/A
PICK-UP S10 (94-) 2.2	G		A	+/-		01/94 ➧ 12/95	52462547	+	**60915A**	667	379	32	P/A
PICK-UP S10 (94-) 2.2	G		A	+/-		01/96 ➧	52472963	+	**609361**	667	379	32	P/A
PICK-UP S10 (94-) 2.2	G		A	+/-		01/96 ➧	52472963		**60936A**	667	379	32	P/A
PICK-UP S10 (94-) 4.3	G		A	+/-		01/94 ➧ 12/95	52462547	+	**60915A**	667	379	32	P/A
PICK-UP S10 (94-) 4.3	G		A	+/-		01/96 ➧	52472963	+	**609361**	667	379	32	P/A
PICK-UP S15 (94-) 2.2	G		A	+/-		01/94 ➧ 12/95	52462547	+	**60915A**	667	379	32	P/A
PICK-UP S15 (94-) 2.2	G		A	+/-		01/96 ➧	52472963	+	**609361**	667	379	32	P/A
PICK-UP S15 (94-) 2.2	G		A	+/-		01/96 ➧	52472963		**60936A**	667	379	32	P/A
PICK-UP S15 (94-) 4.3	G		A	+/-		01/94 ➧ 12/95	52462547	+	**60915A**	667	379	32	P/A
PICK-UP S15 (94-) 4.3	G		A	+/-		01/96 ➧	52472963	+	**609361**	667	379	32	P/A
PICKUP C/K 4.3	G		A	+/-		01/94 ➧ 12/94	3058768	+	**609691**	720	439	32	P/A
PICKUP C/K 4.8	G		A	+		/85 ➧ /87	3049127	+	**60974**	720	431	34	M/C
PICKUP C/K 5.0	G		M/A	+/-		01/88 ➧ 12/94	3058768	+	**609691**	720	439	32	P/A
PICKUP C/K 5.0	G		A	-		/85 ➧ /87	3049127	+	**60974**	720	431	34	M/C
PICKUP C/K 5.0	G		A	+/-		/81 ➧ /87	3043877	+	**60971**	720	481	41	M/C
PICKUP C/K 5.0	G		A	+/-		01/88 ➧ 12/93	52457840	+	**609691**	720	439	32	P/A
PICKUP C/K 5.7	G		M/A	+/-		01/88 ➧ 12/94	3058768	+	**609691**	720	439	32	P/A
PICKUP C/K 5.7	G		A			/88 ➧ /93	52457840	+	**60969**	720	439	32	P/A
PICKUP C/K 5.7	G		A			/92 ➧ /93	52458924	+	**60946**	870	480	55	M/C
PICKUP C/K 5.7	G		A			/92 ➧ /93	52458924	+	**60946A**	773	439	26	P/A
PICKUP C/K 5.7	G		A	-		/85 ➧ /87	3049127	+	**60974**	720	431	34	M/C
PICKUP C/K 5.7	G		A	+/-		/81 ➧ /87	3043877	+	**60971**	720	481	41	M/C
PICKUP C/K 5.7	G		A	+/-	W. EOC	/88 ➧ /93	52458931	+	**60959**	864	418	49	P/C
PICKUP C/K 6.2 D	D		A			/88 ➧ /93	52457626	+	**60967**	864	495	48	M/C
PICKUP C/K 6.2 D	D		A	+/-		/82 ➧ /87	52457641	+	**60949**	864	478	49	M/C
PICKUP C/K 6.5	G		A	+		/92 ➧ /93	52465219		**60945**	864	478	49	M/C
PICKUP C/K 7.4	G		A	+/-		/82 ➧ /84	52457641	+	**60949**	864	478	49	M/C
PICKUP C/K 7.4	G		A	+/-	W. EOC	/88 ➧ /93	52458931	+	**60959**	864	418	49	P/C
PICKUP C/K 7.4	G		A	+/-		01/92 ➧ 12/93	52457702	+	**60946**	870	480	55	M/C
PICKUP R/V 4.8	G		A	+		/87 ➧ /91	3049127	+	**60974**	720	431	34	M/C
PICKUP R/V 5.0	G		A	-		/87 ➧ /87	3049127	+	**60974**	720	431	34	M/C
PICKUP R/V 5.0	G		A	+		/87 ➧ /87	3043877	+	**60971**	720	481	41	M/C
PICKUP R/V 5.7	G		A	-		/87 ➧ /87	3049127	+	**60974**	720	431	34	M/C
PICKUP R/V 5.7	G		A	+/-		/87 ➧ /91	3043877	+	**60971**	720	481	41	M/C
PICKUP R/V 5.7	G		A	+/-		/88 ➧ /91	3043874	+	**60970**	720	431	19	M/C
PICKUP R/V 5.7	G		A	+/-		/88 ➧ /91	3043874	+	**60970A**	720	439	32	P/A
PICKUP R/V 6.2 D	D		A	+/-		/87 ➧ /91	52457641	+	**60949**	864	478	49	M/C
PICKUP R/V 7.4	G		A			/88 ➧ /91	52457640		**60972**	864	478	49	M/C
PICKUP S/T 2.2	G		A	+/-		01/98 ➧ 12/00	52472963	+	**609361**	667	379	32	P/A
PICKUP S/T 2.2	G		A	+/-		01/98 ➧ 12/00	52472963		**60936A**	667	379	32	P/A
PICKUP S/T 2.2 D	D		M			/84 ➧ /85	3048771	+	**60960**	600	368	33	P/C
PICKUP S/T 2.8	G		M			/82 ➧ /85	3048771	+	**60960**	600	368	33	P/C
PICKUP S/T 4.3	G		A	+/-		01/94 ➧ 12/95	52462547	+	**60915A**	667	379	32	P/A
PICKUP S/T 4.3	G		A	+/-	EOC	01/96 ➧ 12/00	52472963	+	**609361**	667	379	32	P/A
PICKUP S/T 4.3	G			+/-	EOC	01/88 ➧ 12/93	52450025	+	**60968A**	667	379	32	P/A

RADIATORS

	G/D			AC	Note		OE		Nissens	Dim. H W T	Mat.
GMC LIGHT VAN (../..)											
PICKUP S/T 4.3	G			+/-		01/88 ➧ 12/93	52450025	+	**60968A**	667 379 32	P/A
SONOMA (91-) 2.8	G		M	+/-		01/91 ➧ 12/93	3048771	+	**60960**	600 368 33	P/C
SONOMA (91-) 4.3	G		A	+/-		01/91 ➧ 12/93	52450025	+	**60968A**	667 379 32	P/A
SONOMA (94-) 2.2	G		A	+/-		01/94 ➧ 12/95	52462547	+	**60915A**	667 379 32	P/A
SONOMA (94-) 2.2	G		A	+/-		01/96 ➧	52472963	+	**609361**	667 379 32	P/A
SONOMA (94-) 2.2	G		A	+/-		01/96 ➧	52472963		**60936A**	667 379 32	P/A
SONOMA (94-) 4.3	G		A	+/-		01/94 ➧ 12/95	52462547	+	**60915A**	667 379 32	P/A
SONOMA (94-) 4.3	G		A	+/-		01/96 ➧	52472963	+	**609361**	667 379 32	P/A
SUBURBAN (81-) 5.0	G		A	+/-		01/81 ➧ 12/87	3043877	+	**60971**	720 481 41	M/C
SUBURBAN (81-) 5.0	G		A	+/-		01/81 ➧ 12/87	3049127	+	**60974**	720 431 34	M/C
SUBURBAN (81-) 5.7	G		A	+/-		01/81 ➧ 12/91	3043877	+	**60971**	720 481 41	M/C
SUBURBAN (81-) 5.7	G		A	+/-	HD	01/81 ➧ 12/91	3043874	+	**60970**	720 431 19	M/C
SUBURBAN (81-) 5.7	G		A	+/-	HD	01/81 ➧ 12/91	3043874	+	**60970A**	720 439 32	P/A
SUBURBAN (81-) 5.7	G		A	+/-		01/81 ➧ 12/91	3049127	+	**60974**	720 431 34	M/C
SUBURBAN (81-) 6.2 D	D		A	+/-		01/81 ➧ 12/91	52457641	+	**60949**	864 478 49	M/C
SUBURBAN (92-) 5.7	G		A	+/-		01/92 ➧ 12/93	52457702	+	**60946**	870 480 55	M/C
SUBURBAN (92-) 5.7	G		A	+/-		01/92 ➧ 12/93	52457702	+	**60946A**	773 439 26	P/A
SUBURBAN (92-) 6.5 TD	D		A	+		01/92 ➧ 12/93	52465219	+	**60945**	864 478 49	M/C
SUBURBAN (92-) 7.4	G		A	+/-		01/93 ➧ 12/93	52457702	+	**60946**	870 480 55	M/C
VAN G-SERIE (81-) 4.1	G		A	-		/81 ➧ /82	3049127	+	**60974**	720 431 34	M/C
VAN G-SERIE (81-) 4.1	G		A	+/-		/83 ➧ /84	3043874	+	**60970**	720 431 19	M/C
VAN G-SERIE (81-) 4.1	G		A	+/-		/83 ➧ /84	3043874	+	**60970A**	720 439 32	P/A
VAN G-SERIE (81-) 5.0	G		A	-		/83 ➧ /91	3049127	+	**60974**	720 431 34	M/C
VAN G-SERIE (81-) 5.0	G		A	+/-		/81 ➧ /91	3043874	+	**60970**	720 431 19	M/C
VAN G-SERIE (81-) 5.7	G		A	-		/83 ➧ /91	3049127	+	**60974**	720 431 34	M/C
VAN G-SERIE (81-) 5.7	G		A	+/-		/81 ➧ /91	3043874	+	**60970**	720 431 19	M/C
VAN P-SERIE (81-) 4.3	G		A	-		/90 ➧ /93	3049127	+	**60974**	720 431 34	M/C
VAN P-SERIE (81-) 4.3	G		A	+/-	HD	/93 ➧ /93	3043874	+	**60970**	720 431 19	M/C
VAN P-SERIE (81-) 4.3	G		A	+/-	HD	/93 ➧ /93	3043874	+	**60970A**	720 439 32	P/A
VAN P-SERIE (81-) 4.8	G		A	-		/87 ➧ /89	3049127	+	**60974**	720 431 34	M/C
VAN P-SERIE (81-) 4.8	G		A	+/-		/84 ➧ /89	3043874	+	**60970**	720 431 19	M/C
VAN P-SERIE (81-) 4.8	G		A	+/-		/87 ➧ /87	3043877	+	**60971**	720 481 41	M/C
VAN P-SERIE (81-) 5.7	G		A	-		/92 ➧ /93	3049127	+	**60974**	720 431 34	M/C
VAN P-SERIE (81-) 5.7	G		A	+/-		/81 ➧ /93	3043874	+	**60970**	720 431 19	M/C
VAN P-SERIE (81-) 5.7	G		A	+/-		/82 ➧ /93	3043877	+	**60971**	720 481 41	M/C
VAN P-SERIE (81-) 6.2 D	D		A	+/-		/82 ➧ /91	52457641	+	**60949**	864 478 49	M/C
VAN P-SERIE (81-) 7.4	G		A	+/-		/83 ➧ /86	52457641	+	**60949**	864 478 49	M/C
HYUNDAI LIGHT VAN											
GALLOPER (91-) 2.5 TC	D	D4BH	M	+/-		08/91 ➧	HR171401	+	**67046**	425 598 26	M/C
GALLOPER (91-) 2.5 TC	D	D4BH	A	+/-		08/91 ➧	HR171402	+	**67047**	425 600 48	M/C
GALLOPER (91-) 2.5 TCI	D		A	+/-	With IC	08/91 ➧	HQ172106		**67043**	598 425 49	M/C
GALLOPER (91-) 3.0 i V6	G		M	+/-		08/91 ➧	HB031500	+	**67017**	598 425 32	P/A
GALLOPER (91-) 3.0 i V6	G		A	+/-		08/91 ➧	HB031400		**67018**	598 425 26	P/A
GALLOPER (98-) 2.5 TCI	D	D4BH	M	+/-		08/91 ➧	HR171401	+	**67046**	425 598 26	M/C
GALLOPER (98-) 2.5 TD	D	D4BF	M	+/-		08/91 ➧	HR171401	+	**67046**	425 598 26	M/C
H-100 MINI BUS (93-) 2.4 i	G	G4CS	M	-		07/93 ➧	25300-43600	+	**67501**	400 590 32	P/C
H-100 MINI BUS (93-) 2.4 i	G	G4CS	M	+		07/93 ➧	25300-43810	+	**67034**	400 590 26	P/A
H-100 MINI BUS (93-) 2.5 D	D	D4BA	M	+/-		07/93 ➧	25300-43810	+	**67034**	400 590 26	P/A

RADIATORS

	G/D			AC	Note		OE	Nissens	Dim. H	W	T	Mat.
HYUNDAI LIGHT VAN (../..)												
H-100 MINI BUS (93-) 2.5 D	D	D4BB	M	+/-		07/93 ➧	25300-43810+	**67034**	400	590	26	P/A
H-100 MINI BUS (93-) 2.5 TD	D	D4BF	M	+/-		07/93 ➧	25300-43810+	**67034**	400	590	26	P/A
H-100 MINI BUS (93-) 2.6 TD	D		M	+/-		07/93 ➧	25300-4B000	**67499**	0	0	0	P/A
H-100 MINI BUS (93-) 2.6 TD	D		A	+/-		07/93 ➧	25300-43800	**67035**	400	590	26	P/A
H-100 PORTER (93-) 2.5 D	D	D4BA	M	-		07/93 ➧	25300-43000	**67015**	400	598	32	M/C
H-100 PORTER (93-) 2.5 TD	D	D4BX	M	-		07/93 ➧	25300-43000	**67015**	400	598	32	M/C
H-100 PORTER (97-) 2.4 i	G	G4CS	M	+/-		06/96 ➧	25310-4B600	**67497**	400	590	26	P/A
H-100 PORTER (97-) 2.5 D	D	D4BA	M	+/-		06/96 ➧	25300-4B100	**67498**	400	586	48	P/A
H-100 PORTER (97-) 2.5 D	D	D4BB	M	+/-		06/96 ➧	25300-4B100	**67498**	400	586	48	P/A
H-100 PORTER (97-) 2.5 TD	D	D4BF	M	+/-		06/96 ➧	25300-4B000+	**67499**	0	0	0	P/A
H-100 PORTER (97-) 2.6 TD	D	D4BB	M	+/-		06/96 ➧	25300-4B000+	**67499**	0	0	0	P/A
H-200 (97-) 2.4 i	G	G4CS	M	+/-		10/97 ➧	25310-4A600	**67041**	650	445	26	P/A
H-200 (97-) 2.4 i	G	G4CS	A	+/-		10/97 ➧	25310-4A650	**67042**	650	445	26	P/A
H-200 (97-) 2.5 TD	D	D4BF	M	+/-		10/97 ➧	25310-4A100	**67039**	650	445	26	P/A
H-200 (97-) 2.5 TD	D	D4BF	A	+/-		10/97 ➧	25310-4A150	**67040**	650	445	26	P/A
H-200 (97-) 2.6 D	D		M	+/-		10/97 ➧	25310-4A000	**67037**	650	445	18	P/A
H-200 (97-) 2.6 D	D		A	+/-		10/97 ➧	25310-4A050	**67038**	650	445	18	P/A
H1 (97-) 2.4 i	G	G4CS	M	+/-		10/97 ➧	25310-4A000+	**67037**	650	445	18	P/A
H1 (97-) 2.4 i	G	G4CS	M	+/-		10/97 ➧	25310-4A000	**670381**	650	445	18	P/A
H1 (97-) 2.4 i	G	G4CS	A	+/-		10/97 ➧	25310-4A050+	**67038**	650	445	18	P/A
H1 (97-) 2.5 TD	D	D4BF	M	+/-		10/97 ➧	25310-4A100+	**67039**	650	445	26	P/A
H1 (97-) 2.5 TD	D	D4BF	M	+/-		10/97 ➧	25310-4A100	**670401**	650	445	26	P/A
H1 (97-) 2.5 TD	D	D4BF	A	+/-		10/97 ➧	25310-4A150+	**67040**	650	445	26	P/A
H1 (97-) 2.5 TDi	D	D4BH	M	+/-	With IC	10/97 ➧	25310-4A100+	**67039**	650	445	26	P/A
H1 (97-) 2.5 TDi	D	D4BH	A	+/-	With IC	10/97 ➧	25310-4A150+	**67040**	650	445	26	P/A
H1 (97-) 2.6 D	D		M	+/-		10/97 ➧	25310-4A000+	**67038**	650	445	18	P/A
H1 (97-) 2.6 D	D		A	+/-		10/97 ➧	25310-4A050+	**67038**	650	445	18	P/A
STAREX (93-) 2.4 i	G	G4CS	M	+/-		07/93 ➧	25300-43600+	**67501**	400	590	32	P/C
STAREX (93-) 2.4 i	G	G4CS	M	+/-		07/93 ➧	25310-4B600	**67497**	400	590	26	P/A
STAREX (93-) 2.5 TD	D	D4BF	M	+/-		07/93 ➧	25300-43350	**67490**	400	586	39	P/A
STAREX (93-) 2.5 TD	D	D4BF	M	+/-		07/93 ➧	25300-4B100	**67498**	400	586	48	P/A
KIA LIGHT VAN												
K-SERIE (01-) 2.5 TCI	D	D4BH	M	+/-		03/01 ➧	60B-15-200 +	**66646**	400	535	35	P/C
K-SERIE (01-) 2.5 TCI	D	D4BH	M	+/-		03/01 ➧	OK63K-15-200	**66670**	0	0	0	P/C
K-SERIE (01-) 2.7 D	D	NA	M	+/-		03/01 ➧	60A-15-200 +	**66622**	400	535	36	P/C
K-SERIE (01-) 2.7 D	D	NA	A	+/-		03/01 ➧	OK60H-15-200A	**66623**	400	535	36	P/C
LDV (96-) LIGHT VAN												
CONVOY (98-) 2.5 DI	D	EN55	M	+/-		10/98 ➧	90 353 025	**63278A**	531	359	40	P/A
CONVOY (98-) 2.5 TDi	D	ET70	M	+/-		10/98 ➧	90 353 025	**63278A**	531	359	40	P/A
MAZDA LIGHT VAN												
B 1600 (84-) 1.6	G		M	+/-		12/84 ➧ 12/93	F650-15-200	**62416**	375	568	17	M/C
B 1600 (84-) 1.6 D	D		M	+/-		12/84 ➧	R226-15-200 A+	**68130**	400	565	32	P/A
B 2000 (84-) 2.0	G		M	+/-		12/84 ➧ 12/93	F650-15-200	**62416**	375	568	17	M/C
B 2000 (84-) 2.0 D	D		M	+/-		12/84 ➧	R226-15-200 A+	**68130**	400	565	32	P/A
B 2200 (84-) 2.2	G	2184	M	+/-		12/84 ➧ 12/93	F650-15-200	**62416**	375	568	17	M/C
B 2200 (84-) 2.2 D	D		M	+/-		12/84 ➧	R226-15-200 A+	**68130**	400	565	32	P/A

RADIATORS

	G/D			AC	Note		OE	Nissens	Dim. H W T	Mat.
MAZDA LIGHT VAN (../..)										
B 2500 (96-) 2.5 D	D	MD25NA	M	+/-		02/96 ➧	WL21-15-200A+	**62246**	450 639 26	P/A
B 2500 (96-) 2.5 D	D	MD25NA	M	+/-		02/96 ➧	WL21-15-200A+	**62246A**	450 639 26	P/A
B 2500 (96-) 2.5 D	D	WL	M	+/-		02/96 ➧	WL21-15-200A+	**62246**	450 639 26	P/A
B 2500 (96-) 2.5 TD	D	MD25TI	M	+/-		02/96 ➧	WL21-15-200A+	**62246**	450 639 26	P/A
B 2500 (96-) 2.5 TD	D	WLT	M	+/-		02/96 ➧	WL21-15-200A+	**62246**	450 639 26	P/A
B 2600 (84-) 2.6	G		M	+/-		12/84 ➧ 11/89	AM15-15-200A	**62461**	375 598 33	M/C
B 2600 (89-) 2.6	G		M	+/-		11/89 ➧ 05/96	G607-15-200 A	**62417**	400 648 17	M/C
E 2000 D (87-) 2.0 D	D		M	+/-	4X2	12/87 ➧ 08/99	R2L1-15-200 A+	**62381**	350 569 32	M/C
E 2000 D (99-) 2.0 D	D		M	+/-		08/99 ➧	R2S2-15-200 B+	**67358**	377 532 32	P/A
E 2000 D (99-) 2.0 D	D		M	+/-		08/99 ➧	R2S2-15-200 B+	**68502A**	375 545 26	P/A
E 2200 D (87-) 2.2 D	D		M	+/-	4X2	12/87 ➧ 08/99	R2L1-15-200 A+	**62381**	350 569 32	M/C
E 2200 D (99-) 2.2 D	D		M	+/-		08/99 ➧	R2S2-15-200 B+	**67358**	377 532 32	P/A
E 2200 D (99-) 2.2 D	D		M	+/-		08/99 ➧	R2S2-15-200 B+	**68502A**	375 545 26	P/A
MPV LV (95-) 3.0 i	G	JE	M	+/-		12/95 ➧	JE98-15-200C	**62436**	504 647 21	M/C
MPV LV (95-) 3.0 i	G	JE	A	+/-		12/95 ➧	JEA3-15-200B	**62435**	504 647 33	M/C
MPV LW (99-) 2.5 i	G	GY-DE	M/A	+/-		06/99 ➧	GY01-15-200 B+	**62468**	690 454 16	M/C
TRIBUTE (02-) 2.0 i 16V	G		M/A	+/-		09/02 ➧	YF09-15-200+	**62004**	700 467 26	P/A
TRIBUTE (02-) 2.3 i 16V	G		M/A	+/-		09/02 ➧	YF09-15-200+	**62004**	700 467 26	P/A
TRIBUTE (02-) 3.0 i V6 24V	G		M/A	+/-		09/02 ➧	AJ-03-15200+	**62003**	700 467 26	P/A
MERCEDES LIGHT VAN										
207 D (77-) 2.4 DIESEL	D	OM616917	M	-		04/77 ➧ 12/82	601 500 06 03+	**62581**	415 624 33	M/C
207 D (77-) 2.4 DIESEL	D	OM616937/939	M	-	HD	01/86 ➧ 12/88	601 500 51 03+	**62633**	473 494 42	P/C
207 D (77-) 2.4 DIESEL	D	OM616937/939	M	-		01/86 ➧ 12/88	601 500 65 03+	**62635**	473 494 33	P/C
207 D (77-) 2.4 DIESEL	D	OM616937/939	M	-		08/82 ➧ 12/85	601 500 06 03+	**62581**	415 624 33	M/C
207 D (77-) 2.4 DIESEL	D	OM616937/939	A	-		01/86 ➧ 12/88	601 500 55 03+	**62632**	473 494 42	P/C
209 D (76-) 3.0 DIESEL	D	OM617913	M	-		01/86 ➧ 12/88	601 500 65 03+	**62635**	473 494 33	P/C
209 D (76-) 3.0 DIESEL	D	OM617913	M	-	HD	01/86 ➧ 12/88	601 500 51 03+	**62633**	473 494 42	P/C
209 D (76-) 3.0 DIESEL	D	OM617913	A	-		01/86 ➧ 12/88	601 500 55 03	**62632**	473 494 42	P/C
307 D (77-) 2.4 DIESEL	D	OM616934	M	-		08/77 ➧ 07/82	601 500 06 03+	**62581**	415 624 33	M/C
307 D (77-) 2.4 DIESEL	D	OM616937/939	M	-	HD	01/86 ➧ 12/88	601 500 51 03+	**62633**	473 494 42	P/C
307 D (77-) 2.4 DIESEL	D	OM616937/939	M	-		01/86 ➧ 12/88	601 500 65 03+	**62635**	473 494 33	P/C
307 D (77-) 2.4 DIESEL	D	OM616937/939	M	-		08/82 ➧ 12/85	601 500 06 03+	**62581**	415 624 33	M/C
307 D (77-) 2.4 DIESEL	D	OM616937/939	A	-		01/86 ➧ 12/88	601 500 55 03	**62632**	473 494 42	P/C
309 (68-) 309	G	M 115	M			10/82 ➧	309 500 65 02	**62630**	475 501 33	P/C
309 (68-) 508	G		M			10/82 ➧	310 500 00 02	**62630**	475 501 33	P/C
309 (68-) O 309 D	D	OM 314	M			10/82 ➧	310 500 00 02	**62630**	475 501 33	P/C
309 D (68-) 3.0 DIESEL	D	OM 617	M	-	HD	01/86 ➧ 12/88	601 500 68 03	**62633**	473 494 42	P/C
309 D (68-) 3.0 DIESEL	D	OM 617	M	-		01/86 ➧ 12/88	601 500 65 03+	**62635**	473 494 33	P/C
309 D (68-) 3.0 DIESEL	D	OM 617	A	-		01/86 ➧ 12/88	601 500 55 03	**62632**	473 494 42	P/C
407 D (81-) 2.4 DIESEL	D	OM 616	M	-		01/86 ➧ 09/89	601 500 65 03+	**62635**	473 494 33	P/C
407 D (81-) 2.4 DIESEL	D	OM 616	M	-	HD	01/86 ➧ 09/89	601 500 68 03	**62633**	473 494 42	P/C
407 D (81-) 2.4 DIESEL	D	OM 616	M	-		06/81 ➧ 12/85	601 500 06 03+	**62581**	415 624 33	M/C
407 D (81-) 2.4 DIESEL	D	OM 616	A	-		01/86 ➧ 09/89	601 500 55 03	**62632**	473 494 42	P/C
407 D (81-) 3.0 DIESEL	D	OM 617	M	-	HD	01/86 ➧ 09/89	601 500 68 03	**62633**	473 494 42	P/C
407 D (81-) 3.0 DIESEL	D	OM 617	M	-		01/86 ➧ 09/89	601 500 65 03+	**62635**	473 494 33	P/C
407 D (81-) 3.0 DIESEL	D	OM 617	A	-		01/86 ➧ 09/89	601 500 55 03	**62632**	473 494 42	P/C

RADIATORS

	G/D			AC	Note		OE	Nissens	Dim. H W T	Mat.
MERCEDES LIGHT VAN (../..)										
409 D (77-) 2.4 DIESEL	D	OM 616	M	-		01/86 ➧ 09/89	601 500 65 03+	**62635**	473 494 33	P/C
409 D (77-) 2.4 DIESEL	D	OM 616	M	-	HD	01/86 ➧ 09/89	601 500 68 03	**62633**	473 494 42	P/C
409 D (77-) 2.4 DIESEL	D	OM 616	M	-		06/81 ➧ 12/86	601 500 06 03+	**62581**	415 624 33	M/C
409 D (77-) 2.4 DIESEL	D	OM 616	A	-		01/86 ➧ 09/89	601 500 55 03	**62632**	473 494 42	P/C
409 D (77-) 3.0 DIESEL	D	OM 617	M	-		01/86 ➧ 09/89	601 500 65 03+	**62635**	473 494 33	P/C
409 D (77-) 3.0 DIESEL	D	OM 617	M	-	HD	01/86 ➧ 09/89	601 500 68 03	**62633**	473 494 42	P/C
409 D (77-) 3.0 DIESEL	D	OM 617	A	-		01/86 ➧ 09/89	601 500 55 03	**62632**	473 494 42	P/C
MB 100 D (88-) 2.4 DIESEL	D	OM 616	M			09/87 ➧	631 500 05 02+	**62516**	415 488 33	P/C
SPRINTER (95-) 208 CDI	D	OM611.987	M	+/-		04/00 ➧	901 500 35 00+	**62519A**	680 409 40	P/A
SPRINTER (95-) 208 CDI	D	OM611.987	A	+/-		04/00 ➧	901 500 38 00	**62597A**	680 409 40	P/A
SPRINTER (95-) 208 D	D	OM 601	M	-		01/95 ➧ 04/00	901 500 18 00	**62687A**	570 399 32	P/A
SPRINTER (95-) 208 D	D	OM 601	M	+		01/95 ➧ 04/00	901 500 24 00+	**62685A**	680 409 40	P/A
SPRINTER (95-) 208 D	D	OM 601	M	+		01/95 ➧ 04/00	901 500 31 00	**62664A**	680 409 32	P/A
SPRINTER (95-) 208 D	D	OM 601	A	+		01/95 ➧ 04/00	901 500 34 00	**62686A**	680 409 40	P/A
SPRINTER (95-) 210 D	D	OM 601	M	-		02/95 ➧ 04/00	901 500 18 00	**62687A**	570 399 32	P/A
SPRINTER (95-) 210 D	D	OM 601	M	+		02/95 ➧ 04/00	901 500 31 00	**62664A**	680 409 32	P/A
SPRINTER (95-) 210 D	D	OM 602	M	+		02/95 ➧ 04/00	901 500 24 00+	**62685A**	680 409 40	P/A
SPRINTER (95-) 210 D	D	OM 602	A	+		02/95 ➧ 04/00	901 500 34 00	**62686A**	680 409 40	P/A
SPRINTER (95-) 211 CDI	D	OM611.981/987	M	+/-		04/00 ➧	901 500 35 00+	**62519A**	680 409 40	P/A
SPRINTER (95-) 211 CDI	D	OM611.981/987	A	+/-		04/00 ➧	901 500 38 00	**62597A**	680 409 40	P/A
SPRINTER (95-) 212 D	D	OM 601	M	-		02/95 ➧ 04/00	901 500 18 00	**62687A**	570 399 32	P/A
SPRINTER (95-) 212 D	D	OM 601	M	+		02/95 ➧ 04/00	901 500 31 00	**62664A**	680 409 32	P/A
SPRINTER (95-) 212 D	D	OM 602	M	+		02/95 ➧ 04/00	901 500 24 00+	**62685A**	680 409 40	P/A
SPRINTER (95-) 212 D	D	OM 602	A	+		02/95 ➧ 04/00	901 500 34 00	**62686A**	680 409 40	P/A
SPRINTER (95-) 213 CDI	D	OM611.981/987	M	+/-		04/00 ➧	901 500 35 00+	**62519A**	680 409 40	P/A
SPRINTER (95-) 213 CDI	D	OM611.981/987	A	+/-		04/00 ➧	901 500 38 00	**62597A**	680 409 40	P/A
SPRINTER (95-) 214	G	M 111	M	-		02/95 ➧	901 500 18 00	**62687A**	570 399 32	P/A
SPRINTER (95-) 214	G	M 111	M	+		02/95 ➧	901 500 24 00+	**62685A**	680 409 40	P/A
SPRINTER (95-) 214	G	M 111	A	+		02/95 ➧	901 500 34 00	**62686A**	680 409 40	P/A
SPRINTER (95-) 216 CDI	D	OM612.981	M	+/-		04/00 ➧	901 500 35 00+	**62519A**	680 409 40	P/A
SPRINTER (95-) 216 CDI	D	OM612.981	A	+/-		04/00 ➧	901 500 38 00	**62597A**	680 409 40	P/A
SPRINTER (95-) 308 CDI	D	OM611.987	M	+/-		04/00 ➧	901 500 35 00+	**62519A**	680 409 40	P/A
SPRINTER (95-) 308 CDI	D	OM611.987	A	+/-		04/00 ➧	901 500 38 00	**62597A**	680 409 40	P/A
SPRINTER (95-) 308 D	D	OM 601	M	-		02/95 ➧ 04/00	901 500 18 00	**62687A**	570 399 32	P/A
SPRINTER (95-) 308 D	D	OM 601	M	+		02/95 ➧ 04/00	901 500 24 00+	**62685A**	680 409 40	P/A
SPRINTER (95-) 308 D	D	OM 601	A	+		02/95 ➧ 04/00	901 500 34 00	**62686A**	680 409 40	P/A
SPRINTER (95-) 310 D	D	OM 601	M	-		02/95 ➧ 04/00	901 500 18 00	**62687A**	570 399 32	P/A
SPRINTER (95-) 310 D	D	OM 602	M	+		02/95 ➧ 04/00	901 500 31 00	**62664A**	680 409 32	P/A
SPRINTER (95-) 310 D	D	OM 602	M	+		02/95 ➧ 04/00	901 500 24 00+	**62685A**	680 409 40	P/A
SPRINTER (95-) 310 D	D	OM 602	A	+		02/95 ➧ 04/00	901 500 34 00	**62686A**	680 409 40	P/A
SPRINTER (95-) 311 CDI	D	OM611.981/987	M	+/-		04/00 ➧	901 500 35 00+	**62519A**	680 409 40	P/A
SPRINTER (95-) 311 CDI	D	OM611.981/987	A	+/-		04/00 ➧	901 500 38 00	**62597A**	680 409 40	P/A
SPRINTER (95-) 312 D	D	OM 601	M	-		02/95 ➧ 04/00	901 500 18 00	**62687A**	570 399 32	P/A
SPRINTER (95-) 312 D	D	OM 602	M	+		02/95 ➧ 04/00	901 500 31 00	**62664A**	680 409 32	P/A
SPRINTER (95-) 312 D	D	OM 602	M	+		02/95 ➧ 04/00	901 500 24 00+	**62685A**	680 409 40	P/A
SPRINTER (95-) 312 D	D	OM 602	A	+		02/95 ➧ 04/00	901 500 34 00	**62686A**	680 409 40	P/A
SPRINTER (95-) 313 CDI	D	OM611.981/987	M	+/-		04/00 ➧	901 500 35 00+	**62519A**	680 409 40	P/A
SPRINTER (95-) 313 CDI	D	OM611.981/987	A	+/-		04/00 ➧	901 500 38 00	**62597A**	680 409 40	P/A
SPRINTER (95-) 314	G	M 111	M	-		02/95 ➧ 04/00	901 500 18 00	**62687A**	570 399 32	P/A
SPRINTER (95-) 314	G	M 111	M	+		02/95 ➧ 04/00	901 500 24 00+	**62685A**	680 409 40	P/A
SPRINTER (95-) 314	G	M 111	A	+		02/95 ➧ 04/00	901 500 34 00	**62686A**	680 409 40	P/A

RADIATORS

	G/D			AC	Note		OE	Nissens	Dim. H W T	Mat.
MERCEDES LIGHT VAN (../..)										
SPRINTER (95-) 316 CDI	D	OM612.981	M	+/-		04/00 ➧	901 500 35 00+	**62519A**	680 409 40	P/A
SPRINTER (95-) 316 CDI	D	OM612.981	A	+/-		04/00 ➧	901 500 38 00	**62597A**	680 409 40	P/A
SPRINTER (95-) 408 CDI	D	OM611.987	M	+/-		04/00 ➧	901 500 35 00+	**62519A**	680 409 40	P/A
SPRINTER (95-) 408 CDI	D	OM611.987	A	+/-		04/00 ➧	901 500 38 00	**62597A**	680 409 40	P/A
SPRINTER (95-) 408 D	D	OM 601	M	-		02/95 ➧ 04/00	901 500 18 00	**62687A**	570 399 32	P/A
SPRINTER (95-) 408 D	D	OM 601	M	+		02/96 ➧	901 500 24 00+	**62685A**	680 409 40	P/A
SPRINTER (95-) 408 D	D	OM 601	M	+		02/96 ➧	901 500 31 00	**62664A**	680 409 32	P/A
SPRINTER (95-) 408 D	D	OM 601	A	+/-		02/96 ➧	901 500 34 00	**62686A**	680 409 40	P/A
SPRINTER (95-) 410 D	D	OM 601	M	-		02/95 ➧ 04/00	901 500 18 00	**62687A**	570 399 32	P/A
SPRINTER (95-) 410 D	D	OM602.980	M	+		02/96 ➧	901 500 31 00	**62664A**	680 409 32	P/A
SPRINTER (95-) 410 D	D	OM602.980	M	+		02/96 ➧	901 500 24 00+	**62685A**	680 409 40	P/A
SPRINTER (95-) 410 D	D	OM602.980	A	+		02/96 ➧	901 500 34 00	**62686A**	680 409 40	P/A
SPRINTER (95-) 411 CDI	D	OM611.981/987	M	+/-		04/00 ➧	901 500 35 00+	**62519A**	680 409 40	P/A
SPRINTER (95-) 411 CDI	D	OM611.981/987	A	+/-		04/00 ➧	901 500 38 00	**62597A**	680 409 40	P/A
SPRINTER (95-) 412 D	D	OM602.980	M	+		02/96 ➧	901 500 31 00	**62664A**	680 409 32	P/A
SPRINTER (95-) 412 D	D	OM602.980	M	+		02/96 ➧	901 500 24 00+	**62685A**	680 409 40	P/A
SPRINTER (95-) 412 D	D	OM602.980	A	+		02/96 ➧	901 500 34 00	**62686A**	680 409 40	P/A
SPRINTER (95-) 413 CDI	D	OM612.981	M	+/-		04/00 ➧	901 500 35 00+	**62519A**	680 409 40	P/A
SPRINTER (95-) 413 CDI	D	OM612.981	A	+/-		04/00 ➧	901 500 38 00	**62597A**	680 409 40	P/A
SPRINTER (95-) 414	G	M111.979	M	-		02/96 ➧	901 500 18 00	**62687A**	570 399 32	P/A
SPRINTER (95-) 414	G	M111.979	M	+		02/96 ➧	901 500 24 00+	**62685A**	680 409 40	P/A
SPRINTER (95-) 414	G	M111.979	A	+		02/96 ➧	901 500 34 00	**62686A**	680 409 40	P/A
SPRINTER (95-) 416 CDI	D	OM612.981	M	+/-		04/00 ➧	901 500 35 00+	**62519A**	680 409 40	P/A
SPRINTER (95-) 416 CDI	D	OM612.981	A	+/-		04/00 ➧	901 500 38 00	**62597A**	680 409 40	P/A
SPRINTER (95-) 616 CDI	D	OM612.981	M	+/-		04/00 ➧	901 500 35 00+	**62519A**	680 409 40	P/A
SPRINTER (95-) 616 CDI	D	OM612.981	A	+/-		04/00 ➧	901 500 38 00	**62597A**	680 409 40	P/A
VANEO (02-) 1.6	G	M166.961	M/A	+/-		02/02 ➧	168 500 11 02+	**62781A**	600 359 22	P/A
VANEO (02-) 1.7 CDI	D	OM668.914	M/A	+/-		02/02 ➧	168 500 11 02+	**62781A**	600 359 22	P/A
VANEO (02-) 1.9	G	M166.991	M/A	+/-		02/02 ➧	168 500 11 02+	**62781A**	600 359 22	P/A
VIANO W 639 (03-) 2.0 CDI	D	OM646	M	+/-		09/03 ➧	639 501 04 01	**62572**	680 405 26	P/A
VIANO W 639 (03-) 2.2 CDI	D	OM646	M	+/-		09/03 ➧	639 501 04 01	**62572**	680 405 26	P/A
VIANO W 639 (03-) 3.2 i V6	G	M112	M	+/-		09/03 ➧	639 501 04 01	**62572**	680 405 26	P/A
VIANO W 639 (03-) 3.5 i V6	G	M112	M	+/-		09/03 ➧	639 501 04 01	**62572**	680 405 26	P/A
VITO W 638 (96-) 108 CDI	D	OM611.940	M	-		03/99 ➧	638 501 30 01	**62562**	569 555 26	P/A
VITO W 638 (96-) 108 CDI	D	OM611.940	M	-		03/99 ➧	638 501 33 01	**62573**	570 555 26	P/A
VITO W 638 (96-) 108 CDI	D	OM611.940	M	+		03/99 ➧	638 501 27 01	**62559**	570 558 42	P/A
VITO W 638 (96-) 108 CDI	D	OM611.940	A	+		03/99 ➧	638 501 28 01	**62561**	569 558 42	P/A
VITO W 638 (96-) 108 D	D	OM601.942	M/A	-		02/96 ➧ 03/99	638 501 19 01+	**62677**	570 560 42	P/A
VITO W 638 (96-) 108 D	D	OM601.942	M/A	+		02/96 ➧ 03/99	638 501 21 01+	**62655**	570 560 42	P/A
VITO W 638 (96-) 108 D	D	OM601.942	M	-		02/96 ➧ 03/99	638 501 16 01	**62678**	570 560 25	P/A
VITO W 638 (96-) 110 CDI	D	OM611.980	M	-		03/99 ➧	638 501 30 01	**62562**	569 555 26	P/A
VITO W 638 (96-) 110 CDI	D	OM611.980	M	-		03/99 ➧	638 501 33 01	**62573**	570 555 26	P/A
VITO W 638 (96-) 110 CDI	D	OM611.980	M	+		03/99 ➧	638 501 27 01	**62559**	570 558 42	P/A
VITO W 638 (96-) 110 CDI	D	OM611.980	A	+		03/99 ➧	638 501 28 01	**62561**	569 558 42	P/A
VITO W 638 (96-) 110 TD	D	OM601.970	M/A	-		02/96 ➧ 03/99	638 501 19 01+	**62677**	570 560 42	P/A
VITO W 638 (96-) 110 TD	D	OM601.970	M/A	+		02/96 ➧ 03/99	638 501 21 01+	**62655**	570 560 42	P/A
VITO W 638 (96-) 110 TD	D	OM601.970	M	-		02/96 ➧ 03/99	638 501 16 01	**62678**	570 560 25	P/A
VITO W 638 (96-) 112 CDI	D	OM611.960	M	-		03/99 ➧	638 501 30 01	**62562**	569 555 26	P/A
VITO W 638 (96-) 112 CDI	D	OM611.960	M	-		03/99 ➧	638 501 33 01	**62573**	570 555 26	P/A
VITO W 638 (96-) 112 CDI	D	OM611.960	M	+		03/99 ➧	638 501 27 01	**62559**	570 558 42	P/A

RADIATORS

	G/D			AC	Note		OE	Nissens	Dim. H	W	T	Mat.
MERCEDES LIGHT VAN (../..)												
VITO W 638 (96-) 112 CDI	D	OM611.960	A	+		03/99 ➧	638 501 28 01	**62561**	569	558	42	P/A
VITO W 638 (96-) 113	G	M111.948	M/A	-		02/96 ➧ 03/99	638 501 19 01+	**62677**	570	560	42	P/A
VITO W 638 (96-) 113	G	M111.948	M/A	+		02/96 ➧ 03/99	638 501 21 01+	**62655**	570	560	42	P/A
VITO W 638 (96-) 113	G	M111.948	M	-		02/96 ➧ 03/99	638 501 16 01	**62678**	570	560	25	P/A
VITO W 638 (96-) 113	G	M111.948	M	-		03/99 ➧ 07/03	638 501 33 01	**62573**	570	555	26	P/A
VITO W 638 (96-) 113	G	M111.948	M	+		03/99 ➧ 07/03	638 501 35 01	**62575**	570	558	42	P/A
VITO W 638 (96-) 113	G	M111.948	A	+/-		03/99 ➧ 07/03	638 501 34 01	**62574**	570	558	42	P/A
VITO W 638 (96-) 114	G	M111.978	M/A	-		02/96 ➧ 03/99	638 501 19 01+	**62677**	570	560	42	P/A
VITO W 638 (96-) 114	G	M111.978	M/A	+		02/96 ➧ 03/99	638 501 21 01+	**62655**	570	560	42	P/A
VITO W 638 (96-) 114	G	M111.978	M	-		02/96 ➧ 03/99	638 501 16 01	**62678**	570	560	25	P/A
VITO W 638 (96-) 114	G	M111.978	M	-		03/99 ➧ 07/03	638 501 33 01	**62573**	570	555	26	P/A
VITO W 638 (96-) 114	G	M111.978	M	+		03/99 ➧ 07/03	638 501 35 01	**62575**	570	558	42	P/A
VITO W 638 (96-) 114	G	M111.978	A	+/-		03/99 ➧ 07/03	638 501 34 01	**62574**	570	558	42	P/A
VITO W 639 (03-) 2.0 CDI	D	OM646	M	+/-		09/03 ➧	639 501 04 01	**62572**	680	405	26	P/A
VITO W 639 (03-) 2.2 CDI	D	OM646	M	+/-		09/03 ➧	639 501 04 01	**62572**	680	405	26	P/A
VITO W 639 (03-) 3.2 i V6	G	M112	M	+/-		09/03 ➧	639 501 04 01	**62572**	680	405	26	P/A
MITSUBISHI LIGHT VAN												
CANTER (86-) 3.3 TD	D	4D31T	M	+/-		07/86 ➧	MB390160 +	**62807**	460	480	49	M/C
L 200 (83-) 2.3 D	D	4D55	M	+/-		01/83 ➧ 11/86	MB222043 +	**62815**	375	600	33	M/C
L 200 (87-) 2.5 D	D	4D56	M	+/-		01/87 ➧	MB356390 +	**68156**	400	598	32	P/A
L 200 (87-) 2.5 TD	D	4D56T	M	+/-		01/87 ➧	MB356390 +	**68156**	400	598	32	P/A
L 200 (87-) 2.6	G	G54B	M	+/-		01/87 ➧	MB356681 +	**62856**	400	598	33	M/C
L 200 (96-) 2.5 D	D	4D56T	M	+/-		06/96 ➧	MR127853	**62809**	375	626	33	M/C
L 200 (96-) 2.5 TD	D	4D56T	M	+/-		06/96 ➧	MR281023	**62892**	425	603	40	P/A
L 200 (96-) 2.5 TD	D	4D56T	M	+/-	4X4	07/01 ➧	MR571147 +	**62895**	500	665	37	P/A
L 200 (96-) 2.5 TD	D	4D56T	M	+/-	4X4	07/01 ➧	MR571147	**62895A**	498	639	32	P/A
L 300 (80-) 2.3 D	D	4D55	M	+/-		04/83 ➧ 11/86	MB222054	**62828**	390	490	49	P/C
L 300 (80-) 2.5 D	D	4D56	M	+/-		04/83 ➧ 11/86	MB222054	**62828**	390	490	49	P/C
L 300 (86-) 2.0	G	4G63	M	+/-		11/86 ➧	MB127772 +	**67501**	400	590	32	P/C
L 300 (86-) 2.0 i	G	4G63	M	+/-		11/86 ➧	MB127772 +	**67501**	400	590	32	P/C
L 300 (86-) 2.4	G	4G64	M	+/-		11/86 ➧	MB127772 +	**67501**	400	590	32	P/C
L 300 (86-) 2.5 D	D	4D56	M	+/-		08/91 ➧ 08/99	MB127772 +	**67501**	400	590	32	P/C
L 300 (86-) 2.5 D	D	4D56	M	+/-		11/86 ➧ 07/91	MB127772 +	**67501**	400	590	32	P/C
MONTERO SPORT (98-) 2.5 TD	D	4D56T	M/A	+/-		11/98 ➧	MR 258668 +	**68155**	500	638	25	P/A
MONTERO SPORT (98-) 3.0 i V6 24V	G	6G72	M/A	+/-		11/98 ➧	MR 239626 +	**68154**	425	638	25	P/A
OUTLANDER (03-) 2.0 i TURBO	G	4G63	M/A	+/-		05/03 ➧	MN156319 +	**62893**	0	0	0	M/C
OUTLANDER (03-) 2.4 i 16V	G	4G64	M/A	+/-		05/03 ➧	MN156319 +	**62893**	0	0	0	M/C
PAJERO (82-) 2.3 TD	D	4D55	M	+/-		06/82 ➧ 08/84	MB221901	**62842**	400	598	33	M/C
PAJERO (82-) 2.3 TD	D	4D55	M	+/-		09/84 ➧ 04/86	MB356155	**62840**	425	598	33	M/C
PAJERO (82-) 2.3 TD	D	4D55	A	+/-		09/84 ➧ 04/86	MB356156	**62882**	430	600	50	M/C
PAJERO (82-) 2.5 TD	D	4D56	M	+/-		05/86 ➧ 04/91	MB356155	**62840**	425	598	33	M/C
PAJERO (82-) 2.5 TD	D	4D56	A	+/-		05/86 ➧ 04/91	MB356156	**62882**	430	600	50	M/C
PAJERO (82-) 2.6	G	4G54	M	+/-		06/82 ➧ 12/89	MB221901	**62842**	400	598	33	M/C
PAJERO (82-) 3.0 i	G	6G72	M	+/-		11/88 ➧ 05/91	MB538805 +	**62884**	425	598	32	M/C
PAJERO (90-) 2.5 TD	D	4D56T	M	+/-		11/93 ➧ 06/01	MB660078 +	**68157**	375	603	27	P/A
PAJERO (90-) 2.5 TD	D	4D56T	M	+/-		12/90 ➧ 10/93	MB660078 +	**68157**	375	603	27	P/A
PAJERO (90-) 2.8 TD	D	4M40	M	+/-	JAPAN	07/93 ➧	MB890954	**62852**	500	628	42	P/C

RADIATORS

	G/D			AC	Note		OE	Nissens	Dim. H W T	Mat.
MITSUBISHI LIGHT VAN (../..)										
PAJERO (90-) 2.8 TD	D	4M40	A	+/-	JAPAN	07/93 ➧	MB890955	**62853**	500 628 42	P/C
PAJERO (90-) 2.8 TD	D	4M40T	M	+/-		07/93 ➧	MB890956	**62801**	500 628 42	P/C
PAJERO (90-) 2.8 TD	D	4M40T	A	+/-		07/93 ➧	MB890957	**62802**	500 628 42	P/C
PAJERO (90-) 3.0 i	G	6G72	M	+/-		12/90 ➧ 05/94	MB660076 +	**62884**	425 598 32	M/C
PAJERO PININ (99-) 1.8 GDI	G	4G93	M/A	+/-		10/99 ➧	MR373172 +	**68158**	658 425 16	P/A
PAJERO PININ (99-) 2.0 GDI	G	4G94	M/A	+/-		10/00 ➧	MR373172 +	**68158**	658 425 16	P/A
PAJERO SPORT (98-) 2.5 TD	D	4D56T	M/A	+/-		11/98 ➧	MR 258668 +	**68155**	500 638 25	P/A
PAJERO SPORT (98-) 3.0 i V6 24V	G	6G72	M/A	+/-		11/98 ➧	MR 239626 +	**68154**	425 638 25	P/A
SHOGUN (90-) 2.5 TD	D	4D56T	M	+/-		11/93 ➧ 06/01	MB660078 +	**68157**	375 603 27	P/A
SHOGUN (90-) 2.5 TD	D	4D56T	M	+/-		12/90 ➧ 10/93	MB660078 +	**68157**	375 603 27	P/A
SHOGUN (90-) 2.8 TD	D	4M40	M	+/-	JAPAN	07/93 ➧	MB890954	**62852**	500 628 42	P/C
SHOGUN (90-) 2.8 TD	D	4M40	A	+/-	JAPAN	07/93 ➧	MB890955	**62853**	500 628 42	P/C
SHOGUN (90-) 2.8 TD	D	4M40T	M	+/-		07/93 ➧	MB890956	**62801**	500 628 42	P/C
SHOGUN (90-) 2.8 TD	D	4M40T	A	+/-		07/93 ➧	MB890957	**62802**	500 628 42	P/C
SHOGUN (90-) 3.0 i	G	6G72	M	+/-		12/90 ➧ 05/94	MB660076 +	**62884**	425 598 32	M/C
NISSAN LIGHT VAN										
ATLEON (97-) T100.35	D	BD30TI	M	+/-		01/97 ➧	21400-9X202	**62906**	474 469 40	P/C
ATLEON (97-) T100.45	D	BD30TI	M	+/-		01/97 ➧	21400-9X202	**62906**	474 469 40	P/C
ATLEON (97-) T100.56	D	BD30TI	M	+/-		01/97 ➧	21400-9X202	**62906**	474 469 40	P/C
ATLEON (97-) T135.60	G	B440TI	M	+/-		01/97 ➧	21400-D6300	**62904**	432 478 47	P/C
ATLEON (97-) T135.70	G	B440TI	M	+/-		01/97 ➧	21400-D6300	**62904**	432 478 47	P/C
ATLEON (97-) T135.80	G	B440TI	M	+/-		01/97 ➧	21400-D6300	**62904**	432 478 47	P/C
ATLEON (97-) T160.110	G	B660TIL	M	+/-		01/97 ➧	21400-D6400	**62903**	523 558 60	P/C
ATLEON (97-) T160.130	G	B660TIL	M	+/-		01/97 ➧	21400-D6400	**62903**	523 558 60	P/C
ATLEON (97-) T160.150	G	B660TIL	M	+/-		01/97 ➧	21400-D6400	**62903**	523 558 60	P/C
ATLEON (97-) T160.90	G	B660TIL	M	+/-		01/97 ➧	21400-D6400	**62903**	523 558 60	P/C
ATLEON (97-) T200.130	G	B660TIL	M	+/-		01/97 ➧	21400-D6400	**62903**	523 558 60	P/C
ECO (97-) T100.35	D	BD30TI	M	+/-		01/97 ➧	21400-9X202	**62906**	474 469 40	P/C
ECO (97-) T100.45	D	BD30TI	M	+/-		01/97 ➧	21400-9X202	**62906**	474 469 40	P/C
ECO (97-) T100.56	D	BD30TI	M	+/-		01/97 ➧	21400-9X202	**62906**	474 469 40	P/C
ECO (97-) T135.60	G	B440TI	M	+/-		01/97 ➧	21400-D6300	**62904**	432 478 47	P/C
ECO (97-) T135.70	G	B440TI	M	+/-		01/97 ➧	21400-D6300	**62904**	432 478 47	P/C
ECO (97-) T135.80	G	B440TI	M	+/-		01/97 ➧	21400-D6300	**62904**	432 478 47	P/C
ECO (97-) T160.110	G	B660TIL	M	+/-		01/97 ➧	21400-D6400	**62903**	523 558 60	P/C
ECO (97-) T160.130	G	B660TIL	M	+/-		01/97 ➧	21400-D6400	**62903**	523 558 60	P/C
ECO (97-) T160.150	G	B660TIL	M	+/-		01/97 ➧	21400-D6400	**62903**	523 558 60	P/C
ECO (97-) T160.90	G	B660TIL	M	+/-		01/97 ➧	21400-D6400	**62903**	523 558 60	P/C
ECO (97-) T200.130	G	B660TIL	M	+/-		01/97 ➧	21400-D6400	**62903**	523 558 60	P/C
INTERSTAR (02-) 1.9 dCi	D	F9Q	M	-		02/02 ➧ 11/03	4403 216 +	**63812A**	730 389 22	P/A
INTERSTAR (02-) 1.9 dCi	D	F9Q	M	-		11/03 ➧		**63823**	730 414 22	P/A
INTERSTAR (02-) 1.9 dCi	D	F9Q	M	+		02/02 ➧ 01/03		**63936A**	729 399 32	P/A
INTERSTAR (02-) 1.9 dCi	D	F9Q	M	+		11/03 ➧		**63824A**	727 389 26	P/A
INTERSTAR (02-) 2.2 dCi	D	G9T	M	-		02/02 ➧ 11/03	4403 216 +	**63812A**	730 389 22	P/A
INTERSTAR (02-) 2.2 dCi	D	G9T	M	-		11/03 ➧		**63823**	730 414 22	P/A
INTERSTAR (02-) 2.2 dCi	D	G9T	M	+		02/02 ➧ 01/03		**63936A**	729 399 32	P/A
INTERSTAR (02-) 2.2 dCi	D	G9T	M	+		11/03 ➧		**63824A**	727 389 26	P/A
INTERSTAR (02-) 2.5 dCi	D	G9U	M	-		02/02 ➧ 11/03	4403 216 +	**63812A**	730 389 22	P/A
INTERSTAR (02-) 2.5 dCi	D	G9U	M	-		11/03 ➧		**63824A**	727 389 26	P/A
INTERSTAR (02-) 2.5 dCi	D	G9U	M	+		02/02 ➧ 01/03		**63936A**	729 399 32	P/A

RADIATORS

	G/D			AC	Note		OE	Nissens	Dim. H	W	T	Mat.
NISSAN LIGHT VAN (../..)												
INTERSTAR (02-) 2.5 dCi	D	G9U	M	+		11/03 ➧		**63761**	730	415	36	P/A
INTERSTAR (02-) 3.0 dCi	D	ZD30	M	+/-		07/03 ➧	21400 00QAK	**63819**	731	414	36	P/A
KING CAB 720 (82-) 1.8	G	L18	M	+/-		01/82 ➧	21400-18W10	**62934**	330	540	52	M/C
KING CAB 720 (82-) 2.2	G	Z22	M	+/-		01/82 ➧	21400-18W10	**62934**	330	540	52	M/C
KING CAB 720 (82-) 2.2 D	D	SD22	M	+/-		01/82 ➧	21400-32W00	**62931**	330	540	52	M/C
KING CAB 720 (82-) 2.3 D	D	SD23	M	+/-		01/82 ➧	21400-36W00	**62930**	330	650	50	M/C
KING CAB D21 (85-) 1.6	G	Z16	M	+/-		08/85 ➧	21400-01G10	**62929**	428	672	21	P/C
KING CAB D21 (85-) 1.8	G	Z18	M	+/-		08/85 ➧	21400-01G10	**62929**	428	672	21	P/C
KING CAB D21 (85-) 2.0	G	Z20	M	+/-		09/85 ➧	21400-01G00	**62929**	428	672	21	P/C
KING CAB D21 (85-) 2.3 D	D	TD23	M	+/-		08/85 ➧	21400-10G10	**62988**	428	672	33	P/C
KING CAB D21 (85-) 2.4	G	Z24	M	+/-		08/85 ➧	21400-01G00	**62929**	428	672	21	P/C
KING CAB D21 (85-) 2.4 i	G	Z24I	M	+/-		08/85 ➧	21400-01G00	**62929**	428	672	21	P/C
KING CAB D21 (85-) 2.4 i 12V	G	KA24E	M	+/-		08/85 ➧	21400-01G00	**62929**	428	672	21	P/C
KING CAB D21 (85-) 2.5 D	D	SD25	M	+/-		08/85 ➧	21400-10G10	**62988**	428	672	33	P/C
KING CAB D21 (85-) 2.5 TD	D	TD25	M	+/-		09/87 ➧	21400-10G00	**67353**	430	648	32	P/A
KING CAB D21 (85-) 2.7 TDi	D	TD27T	M	+/-		09/87 ➧	21400-10G00	**67353**	430	648	32	P/A
KING CAB D21 (85-) 3.0 i V6	G	VG30E	M	+/-		08/85 ➧	21400-01G00	**62929**	428	672	21	P/C
KING CAB D22 (98-) 2.5 TD	D	TD25	M	+/-	NAVARA	02/98 ➧	21410-2S910	**67357**	450	710	16	P/A
KING CAB D22 (98-) 2.5 TD	D	TD25TI	M	+/-	NAVARA	05/98 ➧	21410-2S710	**67356**	450	710	35	P/A
KING CAB D22 (98-) 3.2 D	D	QD32	M	+/-	NAVARA	05/98 ➧	21410-2S710	**67356**	450	710	35	P/A
KUBISTAR (03-) 1.2 i	G	D7F	M	-		08/03 ➧		**63884**	430	378	23	P/A
KUBISTAR (03-) 1.2 i	G	D7F	M	+		08/03 ➧	77 00 430 784+	**63808**	480	415	28	ALM
KUBISTAR (03-) 1.2 i	G	D7F	M	+		08/03 ➧	77 00 430 784	**638081**	480	415	28	ALM
KUBISTAR (03-) 1.2 i 16V	G	D4F	M	-		08/03 ➧	+	**639371**	430	349	23	ALM
KUBISTAR (03-) 1.2 i 16V	G	D4F	M	-		08/03 ➧		**63937A**	430	349	22	P/A
KUBISTAR (03-) 1.2 i 16V	G	D4F	M	+		08/03 ➧		**63762**	480	470	34	P/A
KUBISTAR (03-) 1.5 dCi	D	K9K	M	-		08/03 ➧		**63809**	480	415	34	P/A
KUBISTAR (03-) 1.5 dCi	D	K9K	M	+		08/03 ➧		**63762**	480	470	34	P/A
KUBISTAR (03-) 1.5 dCi	D	K9K	M	+/-		08/03 ➧		**63763**	460	470	34	P/A
KUBISTAR (03-) 1.6 i 16V	G	K4M	M	-		08/03 ➧	77 00 428 082	**637931**	480	414	28	ALM
KUBISTAR (03-) 1.6 i 16V	G	K4M	M	+		08/03 ➧		**63762**	480	470	34	P/A
KUBISTAR (03-) 1.9 D	D	F8Q	M	-		08/03 ➧		**63854A**	478	439	42	P/A
KUBISTAR (03-) 1.9 D	D	F8Q	M	+		08/03 ➧		**63985**	480	441	47	P/A
KUBISTAR (03-) 1.9 dCi	D	F9Q	M	+/-		08/03 ➧		**63762**	480	470	34	P/A
NOTE (06-) 1.4 i 16V	G	CR14DE	M	-		01/06 ➧	21410-AX600	**62902A**	380	449	16	P/A
NOTE (06-) 1.6 i 16V	G	HR16DE	A	+		01/06 ➧	21460-AX800	**68700A**	380	449	16	P/A
PATHFINDER (97-) 3.3 i V6	G	VG33E	M/A	+/-		01/97 ➧	21410-0W510+	**62916**	500	694	24	P/C
PATHFINDER (97-) 3.5 i V6	G	VQ35DE	M/A	+/-		01/97 ➧	21460-4W007+	**68715**	0	0	0	M/C
PATROL (79-) 2.8	G	2.4 RB 30 S	M	+/-		11/79 ➧	21400-C6400+	**62910**	640	437	60	P/C
PATROL (79-) 2.8	G	2.4 RB 30 S	M	+/-		11/79 ➧	21400-G9605+	**62911**	640	437	40	P/C
PATROL (79-) 2.8	G	2.4 RB 30 S	M	+/-		11/79 ➧	21410-G9604	**62915**	640	437	60	P/C
PATROL (79-) 3.3 D	G	2.4 RB 30 S	M	+/-		11/79 ➧	+	**62911**	640	437	40	P/C
PATROL (79-) 3.3 TD	G	2.4 RB 30 S	M	+/-		11/79 ➧	21400-C6400+	**62910**	640	437	60	P/C
PATROL Y60 (88-) 2.4	G	RB	M	+/-		09/88 ➧ 11/95	21400-G9802	**62959**	740	455	34	P/C
PATROL Y60 (88-) 2.8 TD	D	RD28T	M	+/-		01/90 ➧	21400-G9800	**62912**	740	454	34	P/C
PATROL Y60 (88-) 2.8 TD	D	RD28T	M	+/-		04/90 ➧	21400-G9801	**62913**	740	449	40	P/C
PATROL Y60 (88-) 2.8 TD	D	RD28T	M	+/-		09/88 ➧ 10/91	21400-20J00	**67327**	740	458	38	M/C
PATROL Y60 (88-) 2.8 TD	D	RD28T	M	+/-		09/88 ➧ 11/95	21400-G9806	**62958**	740	455	40	P/C
PATROL Y60 (88-) 2.8 TD	D	RD28T	M	+/-		09/88 ➧ 11/98	21400-G9802	**62959**	740	455	34	P/C

RADIATORS

	G/D			AC	Note		OE	Nissens	Dim. H W T	Mat.
NISSAN LIGHT VAN (../..)										
PATROL Y60 (88-) 4.2 D	D	TD42	M	+/-		01/90 ➧	21400-G9800	**62912**	740 454 34	P/C
PATROL Y60 (88-) 4.2 D	D	TD42	M	+/-		04/90 ➧	21400-G9801	**62913**	740 449 40	P/C
PATROL Y60 (88-) 4.2 D	G	TD42	M	+/-		09/88 ➧ 11/95	21400-G9802	**62959**	740 455 34	P/C
PATROL Y60 (88-) 4.2 D	D	TD42	M	+/-		09/88 ➧ 11/95	21400-G9806	**62958**	740 455 40	P/C
PATROL Y61 (97-) 2.8 TD	D	RD28TI	M	+		10/97 ➧	21410-VB300+	**67354A**	450 910 32	P/A
PATROL Y61 (97-) 2.8 TD	D	RD28TI	A	+		10/97 ➧	21460-VB300	**62953A**	450 910 32	P/A
PATROL Y61 (97-) 2.8 TD	D	RD28TI	A	+		10/97 ➧	21410-VB200+	**67354A**	450 910 32	P/A
PATROL Y61 (97-) 3.0 TD	D	ZD30DDTI	M	+		10/97 ➧	21410-VB800	**62953A**	450 910 32	P/A
PATROL Y61 (97-) 3.0 TD	D	ZD30DDTI	A	+		10/97 ➧	21460-VB800	**62953A**	450 910 32	P/A
PICK UP 720 (82-) 1.8	G	L18	M	+/-		01/82 ➧	21400-18W10	**62934**	330 540 52	M/C
PICK UP 720 (82-) 2.2	G	Z22	M	+/-		01/82 ➧	21400-18W10	**62934**	330 540 52	M/C
PICK UP 720 (82-) 2.2 D	D	SD22	M	+/-		01/82 ➧	21400-32W00	**62931**	330 540 52	M/C
PICK UP 720 (82-) 2.3 D	D	SD23	M	+/-		01/82 ➧	21400-36W00	**62930**	330 650 50	M/C
PICK UP D21 (85-) 1.6	G	Z16	M	+/-		08/85 ➧	21400-01G10	**62929**	428 672 21	P/C
PICK UP D21 (85-) 1.8	G	Z18	M	+/-		08/85 ➧	21400-01G10	**62929**	428 672 21	P/C
PICK UP D21 (85-) 2.0	G	Z20	M	+/-		09/85 ➧	21400-01G00	**62929**	428 672 21	P/C
PICK UP D21 (85-) 2.3 D	D	TD23	M	+/-		08/85 ➧	21400-10G10	**62988**	428 672 33	P/C
PICK UP D21 (85-) 2.4	G	Z24	M	+/-		08/85 ➧	21400-01G00	**62929**	428 672 21	P/C
PICK UP D21 (85-) 2.4 i	G	Z24I	M	+/-		08/85 ➧	21400-01G00	**62929**	428 672 21	P/C
PICK UP D21 (85-) 2.4 i 12V	G	KA24E	M	+/-		08/85 ➧	21400-01G00	**62929**	428 672 21	P/C
PICK UP D21 (85-) 2.5 D	D	SD25	M	+/-		08/85 ➧	21400-10G10	**62988**	428 672 33	P/C
PICK UP D21 (85-) 2.5 TD	D	TD25	M	+/-		09/87 ➧	21400-10G00	**67353**	430 648 32	P/A
PICK UP D21 (85-) 2.7 TDi	D	TD27T	M	+/-		09/87 ➧	21400-10G00	**67353**	430 648 32	P/A
PICK UP D21 (85-) 3.0 i V6	G	VG30E	M	+/-		08/85 ➧	21400-01G00	**62929**	428 672 21	P/C
PICK UP D22 (98-) 2.5 TD	D	TD25	M	+/-	NAVARA	02/98 ➧	21410-2S910	**67357**	450 710 16	P/A
PICK UP D22 (98-) 2.5 TD	D	TD25TI	M	+/-	NAVARA	05/98 ➧	21410-2S710	**67356**	450 710 35	P/A
PICK UP D22 (98-) 3.2 D	D	QD32	M	+/-	NAVARA	05/98 ➧	21410-2S710	**67356**	450 710 35	P/A
PRIMASTAR (02-) 1.9 dCi	D		M	-		07/02 ➧	21400-00QAN	**63026**	561 470 23	P/A
PRIMASTAR (02-) 1.9 dCi	D		M	+		07/02 ➧	21400-00QAS	**63025A**	560 449 26	P/A
PRIMASTAR (02-) 2.0 i 16V	D		M	+/-		07/02 ➧	21400-00QAS	**63025A**	560 449 26	P/A
PRIMASTAR (02-) 2.5 dCi	D		M	-		07/02 ➧		**63817**	781 470 23	P/A
PRIMASTAR (02-) 2.5 dCi	D		M	+		07/02 ➧		**63818**	780 470 28	P/A
SAFARI Y61 (97-) 2.8 TD	D	RD28TI	M	+		10/97 ➧	21410-VB300+	**67354A**	450 910 32	P/A
SAFARI Y61 (97-) 2.8 TD	D	RD28TI	A	+		10/97 ➧	21460-VB300	**62953A**	450 910 32	P/A
SAFARI Y61 (97-) 2.8 TD	D	RD28TI	A	+		10/97 ➧	21410-VB200+	**67354A**	450 910 32	P/A
TERRANO (86-) 2.4	G	Z24	M	+/-		01/86 ➧ 12/92	21400-15G00	**62929**	428 672 21	P/C
TERRANO (86-) 2.4 i	G	Z24I	M	+/-		08/85 ➧	21400-01G00	**62929**	428 672 21	P/C
TERRANO (86-) 3.0	G	VG30	M	+/-		11/85 ➧	21400-09G11	**62986**	428 672 33	P/C
TERRANO (87-) 2.7 TDi	D	TD27T	M	+/-		08/87 ➧	21400-10G00+	**67353**	430 648 32	P/A
TERRANO (87-) 2.7 TDi	D	TD27T	M	+/-		09/87 ➧	21400-10G00	**67353**	430 648 32	P/A
TERRANO (87-) 3.0 i V6	G	VG30E	M	+/-		08/85 ➧	21400-01G00	**62929**	428 672 21	P/C
TERRANO (93-) 2.4 i 12V	G	KA24E	M	+/-		01/93 ➧	21410-0F521	**62070A**	455 649 32	P/A
TERRANO (93-) 2.7 TD	D	TD27T	M	+/-		01/93 ➧	21410-0F121	**62069A**	455 649 32	P/A
TERRANO (96-) 2.7 TDi	D	TD27TI	M	+/-		05/96 ➧	21410-7F000	**68708A**	500 649 26	A/A
TERRANO (96-) 2.7 TDi	D	TD27TI	A	+/-		05/96 ➧	21450-7F001	**68709A**	500 649 26	A/A
TERRANO (02-) 2.7 TDi	D	TD27TI	M	+/-		02/02 ➧	21410-7F000	**68708A**	500 649 26	A/A
TERRANO (02-) 2.7 TDi	D	TD27TI	A	+/-		02/02 ➧	21450-7F001	**68709A**	500 649 26	A/A
TERRANO (02-) 3.0 DI	D	ZD30	M	+/-		02/02 ➧	21410-2X900	**68706A**	500 649 26	A/A

RADIATORS

	G/D			AC	Note		OE	Nissens	Dim. H W T	Mat.
NISSAN LIGHT VAN (../..)										
TERRANO (02-) 3.0 DI	D	ZD30	A	+/-		02/02 ➧	21410-2X800	**68707A**	500 649 26	A/A
TRADE (85-) 2.0	G		M	+/-		01/85 ➧	121005220	**62898**	361 492 60	P/A
VANETTE (86-) 1.5	G	A15	M	+/-		09/87 ➧	21410-Y9504	**62899**	332 550 45	P/A
VANETTE (86-) 2.0	G	Z20	M	+/-		10/86 ➧	21400-Y9601	**62419**	360 551 33	M/C
VANETTE (86-) 2.0 D	D	LD20	M	+/-		10/86 ➧	21410-G5501+	**62950**	478 403 33	M/C
VANETTE (86-) 2.0 D	D	LD20	M	+/-		10/86 ➧	21400-Y9506	**62422**	360 551 52	M/C
VANETTE (86-) 2.4	G	Z24	M	+/-		10/86 ➧	21400-Y9601	**62419**	360 551 33	M/C
VANETTE (86-) 2.4 i	G	Z24I	M	+/-		10/86 ➧	21400-Y9601	**62419**	360 551 33	M/C
VANETTE (92-) 1.6 i 16V	G	GA16DE	M	+/-		07/92 ➧ 09/94	21410-9C001+	**62908A**	422 679 32	P/A
VANETTE (92-) 2.0 D	D	LD20	M	+/-		07/92 ➧	21410-9C100	**62983A**	422 679 32	P/A
VANETTE (92-) 2.0 D	D	LD20	M	+/-		07/92 ➧	21410-9C004+	**62922**	423 685 24	P/C
VANETTE (92-) 2.0 D	D	LD20	M	+/-		07/92 ➧ 09/94	21410-9C002	**62908A**	422 679 32	P/A
VANETTE (92-) 2.0 i 16V	G	SR20DE	M	+/-		07/92 ➧ 09/94	21410-9C001+	**62908A**	422 679 32	P/A
VANETTE CARGO (95-) 1.6 i 16V	G	G16DE	M	+/-		06/96 ➧	21400-7C700+	**62976A**	422 679 32	P/A
VANETTE CARGO (95-) 2.0 D	D	LD20	M	+/-		01/95 ➧	21410-9C600	**62921A**	422 679 32	P/A
VANETTE CARGO (95-) 2.0 D	D	LD20	M	+/-		01/95 ➧	21410-7C003	**62921A**	422 679 32	P/A
VANETTE CARGO (95-) 2.0 i 16V	G	SR20DE	M	+/-		06/96 ➧	21400-7C700+	**62976A**	422 679 32	P/A
VANETTE CARGO (95-) 2.3 D	D	LD23	M	+/-		01/95 ➧	21410-9C600	**62921A**	422 679 32	P/A
VANETTE CARGO (95-) 2.3 D	D	LD23	M	+/-		01/95 ➧	21410-7C003	**62921A**	422 679 32	P/A
VANETTE CARGO (95-) 2.3 D	D	LD23	M	+/-		06/96 ➧	21400-7C700+	**62976A**	422 679 32	P/A
VANETTE CARGO (95-) 2.3 D	D	LD23	M	+/-		09/94 ➧ 06/96	21410-9C602	**62976A**	422 679 32	P/A
X-TRAIL T30 (01-) 2.0 i 16V	G	QR20DE	M	+/-		07/01 ➧	21410-8H900	**68705A**	450 689 26	P/A
X-TRAIL T30 (01-) 2.0 i 16V	G	QR20DE	A	+/-		07/01 ➧	21460-8H900	**68704A**	450 710 16	A/A
X-TRAIL T30 (01-) 2.2 D	D	YD22ETI	M	+		07/01 ➧	21410-8H800	**68703A**	450 689 26	P/A
X-TRAIL T30 (01-) 2.5 i V6 24V	G	QR25DE	M	+/-		01/03 ➧	21410-8H900	**68705A**	450 689 26	P/A
X-TRAIL T30 (01-) 2.5 i V6 24V	G	QR25DE	A	+/-		01/03 ➧	21460-8H900	**68704A**	450 710 16	A/A
OLDSMOBILE LIGHT VAN										
BRAVADA 4.3	G		A	+/-	EOC	01/91 ➧ 12/94	52450025 +	**60968A**	667 379 32	P/A
BRAVADA 4.3	G		A	+/-		01/95 ➧ 12/95	52462547 +	**60915A**	667 379 32	P/A
BRAVADA 4.3	G		A	+/-		01/96 ➧ 12/00	52472963 +	**609361**	667 379 32	P/A
BRAVADA 4.3	G		A	+/-		01/96 ➧ 12/00	52472963	**60936A**	667 379 32	P/A
SILHOUETTE (89-) 3.1	G		A	+/-		09/89 ➧	52451292 +	**60962**	670 431 34	P/C
OPEL LIGHT VAN										
ARENA (98-) 1.9 dCi	D	F9Q	M	-		01/98 ➧ 11/03	4403 216 +	**63812A**	730 389 22	P/A
ARENA (98-) 1.9 dCi	D	F9Q	M	+		01/98 ➧ 06/01	4501137	**63936A**	729 399 32	P/A
ARENA (98-) 1.9 dCi	D	F9Q	M	+		06/01 ➧ 01/03	4501137	**63936A**	729 399 32	P/A
ARENA (98-) 1.9 dCi	D	F9Q	M	+		11/03 ➧		**63824A**	727 389 26	P/A
ARENA (98-) 2.2 dCi	D	G9T	M	-		01/98 ➧ 11/03	4403 216 +	**63812A**	730 389 22	P/A
ARENA (98-) 2.2 dCi	D	G9T	M	-		11/03 ➧		**63823**	730 414 22	P/A
ARENA (98-) 2.2 dCi	D	G9T	M	+		01/98 ➧ 06/01	4501137	**63936A**	729 399 32	P/A
ARENA (98-) 2.2 dCi	D	G9T	M	+		06/01 ➧ 01/03	4501137	**63936A**	729 399 32	P/A
ARENA (98-) 2.2 dCi	D	G9T	M	+		11/03 ➧		**63824A**	727 389 26	P/A
ARENA (98-) 2.2 dTi	D	G9T	M	-		01/98 ➧ 11/03	4403 216 +	**63812A**	730 389 22	P/A
ARENA (98-) 2.2 dTi	D	G9T	M	+		01/98 ➧ 06/01	4501137	**63936A**	729 399 32	P/A
ARENA (98-) 2.2 dTi	D	G9T	M	+		06/01 ➧ 01/03	4501137	**63936A**	729 399 32	P/A
ARENA (98-) 2.5 D	D	S8U	M	-		10/98 ➧		**63922**	731 390 36	P/C
ARENA (98-) 2.5 dCi	D	G9U	M	-		01/98 ➧ 11/03	4403 216 +	**63812A**	730 389 22	P/A

RADIATORS

	G/D			AC	Note		OE		Nissens	Dim. H W T	Mat.
OPEL LIGHT VAN (../..)											
ARENA (98-) 2.5 dCi	D	G9U	M	-		11/03 ➧			**63824A**	727 389 26	P/A
ARENA (98-) 2.5 dCi	D	G9U	M	+		01/98 ➧ 06/01	4501137		**63936A**	729 399 32	P/A
ARENA (98-) 2.5 dCi	D	G9U	M	+		06/01 ➧ 01/03	4501137		**63936A**	729 399 32	P/A
ARENA (98-) 2.5 dCi	D	G9U	M	+		11/03 ➧			**63761**	730 415 36	P/A
ARENA (98-) 2.8 dTi	D	S9W	M	-		10/98 ➧	4403 216	+	**63812A**	730 389 22	P/A
ARENA (98-) 2.8 dTi	D	S9W	M	+		10/98 ➧ 01/03	4501137		**63936A**	729 399 32	P/A
COMBO (93-) 1.2 i	G	C12NZ	M	-		03/93 ➧ 09/00	1300 149	+	**632851**	530 269 22	ALM
COMBO (93-) 1.2 i	G	C12NZ	M	-		03/93 ➧ 09/00	1300 149		**63285A**	530 269 22	P/A
COMBO (93-) 1.2 i	G	C12NZ	M	+		03/93 ➧ 09/00	1300 152	+	**63254A**	680 268 32	P/A
COMBO (93-) 1.2 i	G	C12NZ	M	+		03/93 ➧ 09/00	1300 152		**632921**	680 268 28	P/A
COMBO (93-) 1.2 i	G	X12SZ	M	-		03/93 ➧ 09/00	1300 149	+	**632851**	530 269 22	ALM
COMBO (93-) 1.2 i	G	X12SZ	M	+		03/93 ➧ 09/00	1300 152	+	**63254A**	680 268 32	P/A
COMBO (93-) 1.4 i	G	C14NZ	M	-		03/93 ➧ 09/00	1300 149	+	**632851**	530 269 22	ALM
COMBO (93-) 1.4 i	G	C14NZ	M	+		03/93 ➧ 09/00	1300 152	+	**63254A**	680 268 32	P/A
COMBO (93-) 1.4 i	G	X14SZ	M	-		03/93 ➧ 09/00	1300 149	+	**632851**	530 269 22	ALM
COMBO (93-) 1.4 i	G	X14SZ	M	+		03/93 ➧ 09/00	1300 152	+	**63254A**	680 268 32	P/A
COMBO (93-) 1.4 i 16V	G	X14XE	M	-		03/93 ➧ 09/00	1300 149	+	**632851**	530 269 22	ALM
COMBO (93-) 1.4 i 16V	G	X14XE	M	+		03/93 ➧ 09/00	1300 152	+	**63254A**	680 268 32	P/A
COMBO (93-) 1.7 D	D	17D	M	+/-		03/96 ➧ 09/00	1300 151		**63286**	650 268 42	P/C
COMBO (93-) 1.7 D	D	X17D	M	+/-		03/96 ➧ 09/00	1300 151		**63286**	650 268 42	P/C
COMBO (00-) 1.2 i 16V	G	Z12XE	M	+/-		09/00 ➧	1300 236		**63007A**	538 369 22	P/A
COMBO (00-) 1.3 DTi	D	Y13DT	M	+		10/04 ➧	1300 259	+	**63094**	600 350 24	P/A
COMBO (00-) 1.3 DTi	D	Z13DT	M	+		10/04 ➧	1300 259	+	**63094**	600 350 24	P/A
COMBO (00-) 1.4 i 16V	G	Z14XE	M	+/-		09/00 ➧	1300 237		**63008A**	538 369 22	P/A
COMBO (00-) 1.7 DTi	D	Y17DT	M	+/-		09/00 ➧	1300 233		**63009A**	598 369 32	P/A
COMBO (00-) 1.7 DTi	D	Y17DTL	M	+/-		09/00 ➧	1300 233		**63009A**	598 369 32	P/A
COMBO (00-) 1.7 DTi	D	Z17DTH	M	+/-		09/00 ➧	1300 233		**63009A**	598 369 32	P/A
FRONTERA A (92-) 2.0 i	G	C20NE	M	+/-		03/91 ➧ 03/95	1300 119	+	**63244**	424 601 33	P/C
FRONTERA A (92-) 2.0 i	G	X20SE	M	+/-		10/94 ➧ 08/98	1302 058	+	**63244**	424 601 33	P/C
FRONTERA A (92-) 2.2 i	G	X22SE	M	+/-		10/94 ➧ 08/98	1302 058	+	**63244**	424 601 33	P/C
FRONTERA A (92-) 2.2 i 16V	G	X22XE	M	+/-		10/94 ➧ 08/98	1302 058	+	**63244**	424 601 33	P/C
FRONTERA A (92-) 2.3 TD	D	23DTR	M	+/-		03/91 ➧ 09/94	1300 121	+	**63245**	424 601 42	P/C
FRONTERA A (92-) 2.4 i	G	C24NE	M	+/-		02/92 ➧ 09/94	1300 120		**63244**	424 601 33	P/C
FRONTERA A (92-) 2.5 TDS	D		M	+/-		07/96 ➧ 09/98	6302 020	+	**63299**	410 610 42	P/C
FRONTERA A (92-) 2.8 TD	D	28TD	M	+/-		10/94 ➧ 09/98	1300 157	+	**63037**	425 595 32	P/A
MONTEREY (91-) 3.1 TD	D	31DT/4JG2	M	+/-		02/91 ➧	1300 136	+	**63002**	500 648 33	P/C
MONTEREY (91-) 3.2	G	V6 24V	M	+/-		09/91 ➧	1300 138		**63002**	500 648 33	P/C
MOVANO (98-) 1.9 dCi	D	F9Q	M	-		01/98 ➧ 11/03	4403 216	+	**63812A**	730 389 22	P/A
MOVANO (98-) 1.9 dCi	D	F9Q	M	+		01/98 ➧ 06/01	4501137		**63936A**	729 399 32	P/A
MOVANO (98-) 1.9 dCi	D	F9Q	M	+		06/01 ➧ 01/03	4501137		**63936A**	729 399 32	P/A
MOVANO (98-) 1.9 dCi	D	F9Q	M	+		11/03 ➧			**63824A**	727 389 26	P/A
MOVANO (98-) 2.2 dCi	D	G9T	M	-		01/98 ➧ 11/03	4403 216	+	**63812A**	730 389 22	P/A
MOVANO (98-) 2.2 dCi	D	G9T	M	-		11/03 ➧			**63823**	730 414 22	P/A
MOVANO (98-) 2.2 dCi	D	G9T	M	+		01/98 ➧ 06/01	4501137		**63936A**	729 399 32	P/A
MOVANO (98-) 2.2 dCi	D	G9T	M	+		06/01 ➧ 01/03	4501137		**63936A**	729 399 32	P/A
MOVANO (98-) 2.2 dCi	D	G9T	M	+		11/03 ➧			**63824A**	727 389 26	P/A
MOVANO (98-) 2.2 dTi	D	G9T	M	-		01/98 ➧ 11/03	4403 216	+	**63812A**	730 389 22	P/A
MOVANO (98-) 2.2 dTi	D	G9T	M	+		01/98 ➧ 06/01	4501137		**63936A**	729 399 32	P/A
MOVANO (98-) 2.2 dTi	D	G9T	M	+		06/01 ➧ 01/03	4501137		**63936A**	729 399 32	P/A
MOVANO (98-) 2.5 D	D	S8U	M	-		10/98 ➧			**63922**	731 390 36	P/C

RADIATORS

	G/D			AC	Note		OE	Nissens	Dim. H W T	Mat.
OPEL LIGHT VAN (../..)										
MOVANO (98-) 2.5 dCi	D	G9U	M	-		01/98 ➧ 11/03	4403 216 +	**63812A**	730 389 22	P/A
MOVANO (98-) 2.5 dCi	D	G9U	M	-		11/03 ➧		**63824A**	727 389 26	P/A
MOVANO (98-) 2.5 dCi	D	G9U	M	+		01/98 ➧ 06/01	4501137	**63936A**	729 399 32	P/A
MOVANO (98-) 2.5 dCi	D	G9U	M	+		06/01 ➧ 01/03	4501137	**63936A**	729 399 32	P/A
MOVANO (98-) 2.5 dCi	D	G9U	M	+		11/03 ➧		**63761**	730 415 36	P/A
MOVANO (98-) 2.8 dTi	D	S9W	M	-		10/98 ➧	4403 216 +	**63812A**	730 389 22	P/A
MOVANO (98-) 2.8 dTi	D	S9W	M	+		10/98 ➧ 01/03	4501137	**63936A**	729 399 32	P/A
MOVANO (98-) 3.0 dCi	D	ZD30	M	+/-		01/03 ➧	4415 068	**63819**	731 414 36	P/A
VIVARO (01-) 1.9 dTi	D	F9Q	M	-		05/01 ➧	4414161 +	**63026**	561 470 23	P/A
VIVARO (01-) 1.9 dTi	D	F9Q	M	+		05/01 ➧	4408645	**63025A**	560 449 26	P/A
VIVARO (01-) 2.0 i 16V	G	F4R	M	+/-		05/01 ➧	4408645	**63025A**	560 449 26	P/A
VIVARO (01-) 2.5 dTi	D	G9U	M	-		05/01 ➧	4412817 +	**63817**	781 470 23	P/A
VIVARO (01-) 2.5 dTi	D	G9U	M	+		05/01 ➧	4412816 +	**63818**	780 470 28	P/A
PEUGEOT LIGHT VAN										
BOXER (94-) 1.9 D	D	XUD9AU	M	+/-		02/94 ➧ 01/02	1301.N0 +	**61390A**	790 409 32	P/A
BOXER (94-) 1.9 TD	D	XUD9UTF	M	+/-		02/94 ➧ 01/02	1301.N0 +	**61390A**	790 409 32	P/A
BOXER (94-) 2.0	G	XU102C	M	+/-	TROPIC	02/94 ➧ 01/02	1301.JK	**61862**	700 412 24	P/A
BOXER (94-) 2.0	G	XU10J2U	M	+		02/94 ➧ 01/02	1301.N0 +	**61390A**	790 409 32	P/A
BOXER (94-) 2.5 D	D	DJ5	M	-		02/94 ➧ 01/02	1301.N0 +	**61390A**	790 409 32	P/A
BOXER (94-) 2.5 D	D	DJ5	M	+		02/94 ➧ 01/02	1301.N6 +	**61393**	1000414 33	P/C
BOXER (94-) 2.5 TD	D	DJ5T	M	-		02/94 ➧ 01/02	1301.N0 +	**61390A**	790 409 32	P/A
BOXER (94-) 2.5 TD	D	DJ5T	M	+		02/94 ➧ 01/02	1301.N6 +	**61393**	1000414 33	P/C
BOXER (94-) 2.8 D	D	SOFIM	M	+/-		02/94 ➧ 01/02	1301.N0 +	**61390A**	790 409 32	P/A
BOXER (94-) 2.8 HDi	D	8140-43	M	+/-		02/94 ➧ 01/02	1301.N0 +	**61390A**	790 409 32	P/A
BOXER (94-) 2.8 TD	D	8140-43/63	M	+/-		02/94 ➧ 01/02	1301.N0 +	**61390A**	790 409 32	P/A
BOXER (02-) 2.0 HDi	D	DW10TD	M	-		01/02 ➧	1329227080 +	**61390A**	790 409 32	P/A
BOXER (02-) 2.0 HDi	D	DW10TD	M	+		01/02 ➧	1330.98	**61390A**	790 409 32	P/A
BOXER (02-) 2.2 HDi	D	DW12TED	M	-		01/02 ➧	1329227080 +	**61390A**	790 409 32	P/A
BOXER (02-) 2.2 HDi	D	DW12TED	M	+		01/02 ➧	1330.98	**61390A**	790 409 32	P/A
BOXER (02-) 2.8 HDi	D	8140-43S	M	-		01/02 ➧	1329227080 +	**61390A**	790 409 32	P/A
BOXER (02-) 2.8 HDi	D	8140-43S	M	+		01/02 ➧	1330.98	**61390A**	790 409 32	P/A
BOXER (02-) 2.8 TD	D	8140-43S	M	-		01/02 ➧	1330.G7	**61390A**	790 409 32	P/A
EXPERT (95-) 1.6 i	G	SPI	M	-		10/95 ➧	1301.P1	**61396**	600 470 23	P/A
EXPERT (95-) 1.6 i	G	SPI	M	+		10/95 ➧	1301.P3	**61875A**	670 446 32	P/A
EXPERT (95-) 1.8 i	G	XU7JP	M	-		07/96 ➧ 05/99	1301.P1	**61396**	600 470 23	P/A
EXPERT (95-) 1.8 i	G	XU7JP	M	+		07/96 ➧	1301.P3	**61875A**	670 446 32	P/A
EXPERT (95-) 1.9 D	D	DW8	M	-		05/98 ➧	1301.Z0	**61875A**	670 446 32	P/A
EXPERT (95-) 1.9 D	D	DW8	M	+		05/98 ➧	1301.Y7	**61875A**	670 446 32	P/A
EXPERT (95-) 1.9 D	D	XUD9A	M	-		10/95 ➧	1301.Z0	**61875A**	670 446 32	P/A
EXPERT (95-) 1.9 D	D	XUD9A	M	+		10/95 ➧	1301.Y4 +	**61875A**	670 446 32	P/A
EXPERT (95-) 1.9 TD	D	XUDTE	M	+/-		10/95 ➧	1301.Y4 +	**61875A**	670 446 32	P/A
EXPERT (95-) 2.0 i 16V	G	EW10J4	M	-		09/00 ➧	1301.P1	**61396**	600 470 23	P/A
EXPERT (95-) 2.0 i 16V	G	EW10J4	M	+		09/00 ➧	1301.P3	**61875A**	670 446 32	P/A
EXPERT (95-) 2.1 TD	D	XUD11ATE	M	+/-		10/95 ➧	1301.Y4 +	**61875A**	670 446 32	P/A
J5 (81-) 1.8	G	XM7T	M	-		11/81 ➧	1300.G0 +	**63561**	663 415 33	M/C
J5 (81-) 1.9 D	D	XUD9A	M	-		11/81 ➧	1300.J9	**63557**	663 415 33	M/C
J5 (81-) 1.9 TD	D	M705T	M	-		11/81 ➧	1300.K3	**63558**	663 414 33	M/C
J5 (81-) 2.0	G	XN1T	M	-		11/81 ➧	1300.G0 +	**63561**	663 415 33	M/C
J5 (81-) 2.5 D	D	CRD93	M	-		11/81 ➧	1300.F7 +	**63572**	825 415 33	M/C

RADIATORS

	G/D			AC	Note		OE		Nissens	Dim. H W T	Mat.
PEUGEOT LIGHT VAN (../..)											
J5 (81-) 2.5 TD	D	CRD93LS	M	-		11/81 ➧	1300.K3		**63558**	663 414 33	M/C
J7 (70-) 1.9 D	D	XDP88	M	-		01/70 ➧	1300.C1		**63562**	480 470 38	P/C
J7 (70-) 2.1 D	D	XDP90	M	-		01/70 ➧	1300.C1		**63562**	480 470 38	P/C
J7 (78-) 2.3 D	D	XD2P	M	-		01/78 ➧	1300.C1		**63562**	480 470 38	P/C
J9 (70-) 1.9 D	D	XDP88	M	-		01/70 ➧	1300.C1		**63562**	480 470 38	P/C
J9 (70-) 2.1 D	D	XDP90	M	-		01/70 ➧	1300.C1		**63562**	480 470 38	P/C
J9 (78-) 2.3 D	D	XD2P	M	-		01/78 ➧	1300.C1		**63562**	480 470 38	P/C
PARTNER (96-) 1.1 i	G	TU1M	M	-		07/96 ➧ 10/98	1330.07		**63546**	460 378 23	P/A
PARTNER (96-) 1.1 i	G	TU1M	M	-		11/98 ➧	1330.52	+	**63715**	460 377 23	P/A
PARTNER (96-) 1.1 i	G	TU1M	M	+		07/96 ➧	1330.08		**63547**	610 378 23	P/A
PARTNER (96-) 1.4 i	G	TU3JP	M	+/-		07/96 ➧ 10/98	1330.08		**63547**	610 378 23	P/A
PARTNER (96-) 1.4 i	G	TU3JP	M	+/-		11/98 ➧	1330.47		**63716**	610 378 23	P/A
PARTNER (96-) 1.6 i	G	TU5JP	M	+/-		07/96 ➧	1330.08		**63547**	610 378 23	P/A
PARTNER (96-) 1.6 i 16V	G	TU5JP4	M	+/-		11/98 ➧	1330.47		**63716**	610 378 23	P/A
PARTNER (96-) 1.8 D	D	XUD7	M	-		06/96 ➧ 10/98	1330.10		**63509A**	667 359 22	P/A
PARTNER (96-) 1.8 D	D	XUD7	M	-		11/98 ➧	1330.E1	+	**61315A**	667 359 22	P/A
PARTNER (96-) 1.8 D	D	XUD7	M	+		06/96 ➧ 10/98	1330.09		**63508A**	667 359 32	P/A
PARTNER (96-) 1.8 D	D	XUD7	M	+		10/98 ➧	1330.42	+	**61326A**	667 359 32	P/A
PARTNER (96-) 1.8 i	G	XU7JB	M	+/-		07/97 ➧ 10/98	1330.08		**63547**	610 378 23	P/A
PARTNER (96-) 1.8 i	G	XU7JB	M	+/-		11/98 ➧	1330.47		**63716**	610 378 23	P/A
PARTNER (96-) 1.9 D	D	XUD9,DW8, DW8B	M	-		06/96 ➧ 10/98	1330.10		**63509A**	667 359 22	P/A
PARTNER (96-) 1.9 D	D	XUD9,DW8, DW8B	M	-		11/98 ➧	1330.E1	+	**61315A**	667 359 22	P/A
PARTNER (96-) 1.9 D	D	XUD9,DW8, DW8B	M	+		06/96 ➧ 10/98	1330.09		**63508A**	667 359 32	P/A
PARTNER (96-) 1.9 D	D	XUD9,DW8, DW8B	M	+		11/98 ➧	1330.42	+	**61326A**	667 359 32	P/A
PARTNER (96-) 2.0 HDi	D	DW10TD	M	+/-		01/00 ➧	1330.42	+	**61326A**	667 359 32	P/A
PARTNER (02-) 1.1 i	G	TU1JP	M	+/-		11/02 ➧	1330.83	+	**63692A**	380 569 22	P/A
PARTNER (02-) 1.4 i	G	TU3JP	M	+/-		11/02 ➧	1330.83	+	**63692A**	380 569 22	P/A
PARTNER (02-) 1.6 i 16V	G	TU5JP4	M	+/-		11/02 ➧	1330.83	+	**63692A**	380 569 22	P/A
PARTNER (02-) 1.9 D	D	DW8B	M	+/-		11/02 ➧	1330.82	+	**63719A**	380 569 26	P/A
PARTNER (02-) 2.0 HDi	D	DW10TD	M	+/-		11/02 ➧	1330.82	+	**63719A**	380 569 26	P/A
PONTIAC LIGHT VAN											
G6 (05-) 1.9 CDTi	D		M	+/-		01/05 ➧	1300 264		**63114**	415 650 34	P/A
G6 (05-) 1.9 CDTi	D		A	+/-		01/05 ➧	13 156 384	+	**63113A**	650 399 32	P/A
G6 (05-) 2.0 i 16V TURBO	G		M	+/-		01/05 ➧	1300 245	+	**63022A**	650 399 32	P/A
G6 (05-) 2.0 i 16V TURBO	G		A	+/-		01/05 ➧	1300 247	+	**63023**	650 415 27	P/A
G6 (05-) 2.0 i 16V TURBO	G		A	+/-		01/05 ➧	1300 247		**63023A**	650 399 32	P/A
MONTANA (89-) 3.1	G		A	+/-		09/89 ➧			**60962**	670 431 34	P/C
TRANS SPORT (89-) 3.1	G		A	+/-		09/89 ➧	52451292	+	**60962**	670 431 34	P/C
VENTURE (89-) 3.1	G		A	+/-		09/89 ➧			**60962**	670 431 34	P/C
RENAULT LIGHT VAN											
B (83-) 110	D	829	M	-		01/83 ➧ 01/92	50 00 397 635+		**63952**	596 460 40	M/C
B (83-) 120	D	8140471DR	M	-		01/83 ➧ 01/92	50 00 398 274		**63986**	596 454 34	M/C
B (83-) 70	D	829	M	-		01/83 ➧ 01/92	50 00 397 635+		**63952**	596 460 40	M/C
B (83-) 80	D	829	M	-		01/83 ➧ 01/92	50 00 397 635+		**63952**	596 460 40	M/C
B (83-) 90	D	829	M	-		01/83 ➧ 01/92	50 00 397 635+		**63952**	596 460 40	M/C
EXPRESS (85-) 1.0	G	C1C	M	-		11/85 ➧ 08/91	77 00 757 930+		**63867**	342 388 21	P/C

RADIATORS

	G/D			AC	Note		OE	Nissens	Dim. H W T	Mat.
RENAULT LIGHT VAN (../..)										
EXPRESS (85-) 1.1	G	C1E	M	-		11/85 ▸ 08/91	77 00 757 930+	**63867**	342 388 21	P/C
EXPRESS (85-) 1.4	G	C2J	M	-		11/85 ▸ 08/91	77 00 757 930+	**63867**	342 388 21	P/C
EXPRESS (85-) 1.4 i	G	C3J	M	-		11/85 ▸ 08/91	77 00 757 930+	**63867**	342 388 21	P/C
EXPRESS (85-) 1.6 D	D	F8M	M	-		11/85 ▸ 08/91	77 00 773 700	**63934A**	390 398 32	P/A
EXPRESS (91-) 1.1	G	C1E	M	-		09/91 ▸	77 00 805 486	**63929A**	390 349 22	P/A
EXPRESS (91-) 1.2	G	C1G	M	-		09/91 ▸	60 06 000 709	**63894**	430 378 23	P/A
EXPRESS (91-) 1.2 i	G	C3G	M	-		09/91 ▸	60 06 000 709	**63894**	430 378 23	P/A
EXPRESS (91-) 1.4	G	C2J	M	-		09/91 ▸	60 06 000 709	**63894**	430 378 23	P/A
EXPRESS (91-) 1.4	G	E6J	M	-		09/91 ▸	77 00 786 444+	**63924A**	430 349 22	P/A
EXPRESS (91-) 1.4	G	E6J	M	+		09/91 ▸	77 00 806 575	**63968A**	429 389 22	P/A
EXPRESS (91-) 1.4 i	G	C3J	M	-		09/91 ▸	60 06 000 709	**63894**	430 378 23	P/A
EXPRESS (91-) 1.4 i	G	E7J	M	-		09/91 ▸	77 00 786 444+	**63924A**	430 349 22	P/A
EXPRESS (91-) 1.4 i	G	E7J	M	+		09/91 ▸	77 00 806 575	**63968A**	429 389 22	P/A
EXPRESS (91-) 1.6 D	D	F8M	M	-		09/91 ▸	60 06 000 711	**63892**	431 390 36	P/C
EXPRESS (91-) 1.9 D	D	F8Q	M	-		09/91 ▸	60 06 000 712	**63947**	460 439 42	P/C
EXTRA (85-) 1.0	G	C1C	M	-		11/85 ▸ 08/91	77 00 757 930+	**63867**	342 388 21	P/C
EXTRA (85-) 1.1	G	C1E	M	-		11/85 ▸ 08/91	77 00 757 930+	**63867**	342 388 21	P/C
EXTRA (85-) 1.4	G	C2J	M	-		11/85 ▸ 08/91	77 00 757 930+	**63867**	342 388 21	P/C
EXTRA (85-) 1.4 i	G	C3J	M	-		11/85 ▸ 08/91	77 00 757 930+	**63867**	342 388 21	P/C
EXTRA (85-) 1.6 D	D	F8M	M	-		11/85 ▸ 08/91	77 00 773 700	**63934A**	390 398 32	P/A
EXTRA (91-) 1.1	G	C1E	M	-		09/91 ▸	77 00 805 486	**63929A**	390 349 22	P/A
EXTRA (91-) 1.2	G	C1G	M	-		09/91 ▸	60 06 000 709	**63894**	430 378 23	P/A
EXTRA (91-) 1.2 i	G	C3G	M	-		09/91 ▸	60 06 000 709	**63894**	430 378 23	P/A
EXTRA (91-) 1.4	G	C2J	M	-		09/91 ▸	60 06 000 709	**63894**	430 378 23	P/A
EXTRA (91-) 1.4	G	E6J	M	-		09/91 ▸	77 00 786 444+	**63924A**	430 349 22	P/A
EXTRA (91-) 1.4	G	E6J	M	+		09/91 ▸	77 00 806 575	**63968A**	429 389 22	P/A
EXTRA (91-) 1.4 i	G	C3J	M	-		09/91 ▸	60 06 000 709	**63894**	430 378 23	P/A
EXTRA (91-) 1.4 i	G	E7J	M	-		09/91 ▸	77 00 786 444+	**63924A**	430 349 22	P/A
EXTRA (91-) 1.4 i	G	E7J	M	+		09/91 ▸	77 00 806 575	**63968A**	429 389 22	P/A
EXTRA (91-) 1.6 D	D	F8M	M	-		09/91 ▸	60 06 000 711	**63892**	431 390 36	P/C
EXTRA (91-) 1.9 D	D	F8Q	M	-		09/91 ▸	60 06 000 712	**63947**	460 439 42	P/C
KANGOO (98-) 1.2 i	G	D7F	M	-		01/98 ▸	77 00 314 382	**63884**	430 378 23	P/A
KANGOO (98-) 1.2 i	G	D7F	M	+		01/98 ▸	77 00 430 784+	**63808**	480 415 28	ALM
KANGOO (98-) 1.2 i	G	D7F	M	+		01/98 ▸	77 00 430 784	**638081**	480 415 28	ALM
KANGOO (98-) 1.2 i 16V	G	D4D	M	-		01/98 ▸	77 00 428 082	**637931**	480 414 28	ALM
KANGOO (98-) 1.2 i 16V	G	D4D	M	+		01/98 ▸	82 00 072 713	**63762**	480 470 34	P/A
KANGOO (98-) 1.2 i 16V	G	D4F	M	-		01/98 ▸	77 00 838 134+	**639371**	430 349 23	ALM
KANGOO (98-) 1.2 i 16V	G	D4F	M	-		01/98 ▸	77 00 838 134	**63937A**	430 349 22	P/A
KANGOO (98-) 1.2 i 16V	G	D4F	M	+		01/98 ▸ 02/03	81 00 343 476+	**63809**	480 415 34	P/A
KANGOO (98-) 1.2 i 16V	G	D4F	M	+		03/03 ▸	82 00 072 713	**63762**	480 470 34	P/A
KANGOO (98-) 1.4 i	G	E7J	M	-		01/98 ▸	77 00 838 134+	**639371**	430 349 23	ALM
KANGOO (98-) 1.4 i	G	E7J	M	+		01/98 ▸	77 00 836 303	**63768**	480 396 24	P/C
KANGOO (98-) 1.5 dCi	D	K9K	M	-		10/01 ▸	81 00 343 476+	**63809**	480 415 34	P/A
KANGOO (98-) 1.5 dCi	D	K9K	M	+		03/03 ▸ 12/03	82 00 072 713	**63762**	480 470 34	P/A
KANGOO (98-) 1.5 dCi	D	K9K	M	+		09/02 ▸ 03/03	82 00 072 713	**63762**	480 470 34	P/A
KANGOO (98-) 1.5 dCi	D	K9K	M	+		10/01 ▸ 09/02	77 00 304 932+	**63854A**	478 439 42	P/A
KANGOO (98-) 1.5 dCi	D	K9K	M	+/-		10/01 ▸	82 00 072 712+	**63763**	460 470 34	P/A
KANGOO (98-) 1.6 i	D	K7M	M	+/-		12/99 ▸	77 00 430 648	**63886**	480 395 27	P/A
KANGOO (98-) 1.6 i 16V	G	K4M	M/A	-		01/02 ▸	77 00 428 082	**637931**	480 414 28	ALM
KANGOO (98-) 1.6 i 16V	G	K4M	M/A	+		01/02 ▸	82 00 072 713	**63762**	480 470 34	P/A

RADIATORS

	G/D			AC	Note		OE	Nissens	Dim. H W T	Mat.
RENAULT LIGHT VAN (../..)										
KANGOO (98-) 1.9 D	D	F8Q	M	-		09/97 ➧	77 00 304 932+	**63854A**	478 439 42	P/A
KANGOO (98-) 1.9 D	D	F8Q	M	+		09/97 ➧	77 00 301 171+	**63985**	480 441 47	P/A
KANGOO (98-) 1.9 dCi	D	F9Q	M	+/-		01/02 ➧	82 00 072 713	**63762**	480 470 34	P/A
KANGOO (98-) 1.9 dTi	G	F8Q	M	-		03/00 ➧	77 00 417 175	**63855A**	476 399 40	P/A
KANGOO (98-) 1.9 dTi	G	F9Q	M	+		12/99 ➧ 03/00	77 00 836 303	**63768**	480 396 24	P/C
MASTER (80-) 2.0	G	J5R	M	-		08/80 ➧	77 00 741 062	**63940A**	645 399 32	P/A
MASTER (80-) 2.1 D	D	J8S	M	-		09/80 ➧	77 00 741 062	**63940A**	645 399 32	P/A
MASTER (80-) 2.4 D	D	S8U	M	-		09/80 ➧	77 00 741 062	**63940A**	645 399 32	P/A
MASTER (80-) 2.5 D	D	S9U	M	-		03/89 ➧ 09/94	77 00 741 062+	**63940A**	645 399 32	P/A
MASTER (80-) 2.5 TD	D	S9U	M	-		03/89 ➧	77 00 741 062+	**63940A**	645 399 32	P/A
MASTER (98-) 1.9 dCi	D	F9Q	M	-		01/98 ➧ 11/03	4403 216 +	**63812A**	730 389 22	P/A
MASTER (98-) 1.9 dCi	D	F9Q	M	+		01/98 ➧ 06/01	77 01 046 210	**63936A**	729 399 32	P/A
MASTER (98-) 1.9 dCi	D	F9Q	M	+		06/01 ➧ 01/03	77 01 046 210	**63936A**	729 399 32	P/A
MASTER (98-) 1.9 dCi	D	F9Q	M	+		11/03 ➧	77 01 057 119	**63824A**	727 389 26	P/A
MASTER (98-) 2.2 dCi	D	G9T	M	-		01/98 ➧ 11/03	4403 216 +	**63812A**	730 389 22	P/A
MASTER (98-) 2.2 dCi	D	G9T	M	-		11/03 ➧	77 01 057 117	**63823**	730 414 22	P/A
MASTER (98-) 2.2 dCi	D	G9T	M	+		01/98 ➧ 06/01	77 01 046 210	**63936A**	729 399 32	P/A
MASTER (98-) 2.2 dCi	D	G9T	M	+		06/01 ➧ 01/03	77 01 046 210	**63936A**	729 399 32	P/A
MASTER (98-) 2.2 dCi	D	G9T	M	+		11/03 ➧	77 01 057 119	**63824A**	727 389 26	P/A
MASTER (98-) 2.2 dTi	D	G9T	M	-		01/98 ➧ 11/03	4403 216 +	**63812A**	730 389 22	P/A
MASTER (98-) 2.2 dTi	D	G9T	M	+		01/98 ➧ 06/01	77 01 046 210	**63936A**	729 399 32	P/A
MASTER (98-) 2.2 dTi	D	G9T	M	+		06/01 ➧ 01/03	77 01 046 210	**63936A**	729 399 32	P/A
MASTER (98-) 2.5 D	D	S8U	M	-		07/98 ➧ 01/01	4501136 +	**63935A**	760 459 32	P/A
MASTER (98-) 2.5 D	D	S8U	M	+/-		09/97 ➧	77 01 043 670+	**63922**	731 390 36	P/C
MASTER (98-) 2.5 dCi	D	G9U	M	-		07/98 ➧ 11/03	4403 216 +	**63812A**	730 389 22	P/A
MASTER (98-) 2.5 dCi	D	G9U	M	-		11/03 ➧	77 01 057 119	**63824A**	727 389 26	P/A
MASTER (98-) 2.5 dCi	D	G9U	M	+		06/01 ➧ 01/03	77 01 046 210	**63936A**	729 399 32	P/A
MASTER (98-) 2.5 dCi	D	G9U	M	+		07/98 ➧ 06/01	77 01 046 210	**63936A**	729 399 32	P/A
MASTER (98-) 2.5 dCi	D	G9U	M	+		11/03 ➧	77 01 057 120	**63761**	730 415 36	P/A
MASTER (98-) 2.8 dTi	D	S9W	M	-		07/98 ➧	4403 216 +	**63812A**	730 389 22	P/A
MASTER (98-) 2.8 dTi	D	S9W	M	+		09/98 ➧ 01/03	77 01 046 210	**63936A**	729 399 32	P/A
MASTER (98-) 3.0 dCi	D	ZD30	M	+/-		07/03 ➧		**63819**	731 414 36	P/A
RAPID (85-) 1.0	G	C1C	M	-		11/85 ➧ 08/91	77 00 757 930+	**63867**	342 388 21	P/C
RAPID (85-) 1.1	G	C1E	M	-		11/85 ➧ 08/91	77 00 757 930+	**63867**	342 388 21	P/C
RAPID (85-) 1.4	G	C2J	M	-		11/85 ➧ 08/91	77 00 757 930+	**63867**	342 388 21	P/C
RAPID (85-) 1.4 i	G	C3J	M	-		11/85 ➧ 08/91	77 00 757 930+	**63867**	342 388 21	P/C
RAPID (85-) 1.6 D	D	F8M	M	-		11/85 ➧ 08/91	77 00 773 700	**63934A**	390 398 32	P/A
RAPID (91-) 1.1	G	C1E	M	-		09/91 ➧	77 00 795 174	**63921A**	540 349 22	P/A
RAPID (91-) 1.2	G	C1G	M	-		09/91 ➧	60 06 000 709	**63894**	430 378 23	P/A
RAPID (91-) 1.2 i	G	C3G	M	-		09/91 ➧	60 06 000 709	**63894**	430 378 23	P/A
RAPID (91-) 1.4	G	C2J	M	-		09/91 ➧	60 06 000 709	**63894**	430 378 23	P/A
RAPID (91-) 1.4	G	E6J	M	-		09/91 ➧	77 00 786 444+	**63924A**	430 349 22	P/A
RAPID (91-) 1.4	G	E6J	M	+		09/91 ➧	77 00 806 575	**63968A**	429 389 22	P/A
RAPID (91-) 1.4 i	G	C3J	M	-		09/91 ➧	60 06 000 709	**63894**	430 378 23	P/A
RAPID (91-) 1.4 i	G	E7J	M	-		09/91 ➧	77 00 786 444+	**63924A**	430 349 22	P/A
RAPID (91-) 1.4 i	G	E7J	M	+		09/91 ➧	77 00 806 575	**63968A**	429 389 22	P/A
RAPID (91-) 1.6 D	D	F8M	M	-		09/91 ➧	60 06 000 711	**63892**	431 390 36	P/C
RAPID (91-) 1.9 D	D	F8Q	M	-		09/91 ➧	60 06 000 712	**63947**	460 439 42	P/C
RODEO (70-) 4	G	800/B1B	M	-		03/70 ➧	77 01 348 916	**63990**	255 360 40	P/C

RADIATORS

	G/D			AC	Note		OE	Nissens	Dim. H W T	Mat.
RENAULT LIGHT VAN (../..)										
TRAFIC (80-) 1.4	G	847	M	-		09/80 ➧ 02/89	77 00 696 425	**63860**	390 305 35	M/C
TRAFIC (80-) 1.6	G	841/A1M	M	-		09/80 ➧ 02/89	77 00 720 232	**63850**	470 307 33	M/C
TRAFIC (80-) 1.7	G	F1N	M	-		09/80 ➧ 02/89	77 00 720 232	**63850**	470 307 33	M/C
TRAFIC (80-) 2.0	G	829/J5R	M	-		07/86 ➧ 02/89	77 00 736 827	**63880**	630 325 33	M/C
TRAFIC (80-) 2.0	G	829/J5R	M	-		09/80 ➧ 06/86	77 00 696 140	**63900**	530 325 33	M/C
TRAFIC (80-) 2.1 D	D	852	M	-		07/86 ➧ 02/89	77 00 736 827	**63880**	630 325 33	M/C
TRAFIC (80-) 2.1 D	D	852	M	-		09/80 ➧ 06/86	77 00 696 140	**63900**	530 325 33	M/C
TRAFIC (80-) 2.4 D	D	S8U	M	-		09/80 ➧ 02/89	77 00 700 099	**63951**	626 360 35	P/C
TRAFIC (89-) 1.4	G	C1J	M	-		03/89 ➧	77 00 784 039	**63887**	430 397 35	P/A
TRAFIC (89-) 1.7	G	F1N	M	-		03/89 ➧	77 00 784 039	**63887**	430 397 35	P/A
TRAFIC (89-) 2.0	G	J5R	M	-		03/89 ➧	77 00 745 164	**63906**	480 400 42	M/C
TRAFIC (89-) 2.0 i	G	F4R	M	-		06/94 ➧	60 06 004 494	**63834**	585 400 42	P/A
TRAFIC (89-) 2.1 D	D	852	M	-		03/89 ➧ 06/94	77 00 745 164	**63906**	480 400 42	M/C
TRAFIC (89-) 2.1 D	D	J8S	M	-		06/94 ➧	77 00 741 216	**63912A**	670 399 32	P/A
TRAFIC (89-) 2.2	G	J7T	M	-		03/89 ➧	77 00 745 164	**63906**	480 400 42	M/C
TRAFIC (89-) 2.2 i	G	J7T	M	-		06/94 ➧	60 06 004 494	**63834**	585 400 42	P/A
TRAFIC (89-) 2.5 D	D	S8U	M	-		03/89 ➧	77 00 741 216	**63912A**	670 399 32	P/A
TRAFIC (89-) 2.5 TD	D	S8U	M	-		03/89 ➧	77 00 744 158	**63941**	750 400 38	P/C
TRAFIC (97-) 1.9 D	D	F8Q	M	-		09/97 ➧ 03/01	77 00 310 123	**63796**	650 390 36	P/A
TRAFIC (97-) 1.9 dTi	D	F8Q	M	+/-		09/97 ➧ 03/01	4401893 +	**63912A**	670 399 32	P/A
TRAFIC (97-) 2.5 dTi	D	S8U	M	+/-		09/97 ➧ 03/01	4401893 +	**63912A**	670 399 32	P/A
TRAFIC (01-) 1.9 dCi	D	F9Q	M	-		04/01 ➧	82 00 073 817	**63026**	561 470 23	P/A
TRAFIC (01-) 1.9 dCi	D	F9Q	M	+		04/01 ➧	77 00 312 899	**63025A**	560 449 26	P/A
TRAFIC (01-) 1.9 dCi	D	F9Q	M	+		04/01 ➧	77 00 312 899	**63025A**	560 449 26	P/A
TRAFIC (01-) 2.0 i 16V	G	F4R	M	+/-		04/01 ➧	77 00 312 899	**63025A**	560 449 26	P/A
TRAFIC (01-) 2.5 dCi	D	G9U	M	-		09/02 ➧	82 00 019 380+	**63817**	781 470 23	P/A
TRAFIC (01-) 2.5 dCi	D	G9U	M	+		09/02 ➧	82 00 297 816	**63818**	780 470 28	P/A
SEAT LIGHT VAN										
INCA (95-) 1.4 i	G	AEX	M	-		11/95 ➧ 12/97	6K0.121.253 K+	**639951**	528 299 22	ALM
INCA (95-) 1.4 i	G	AEX	M	-		11/95 ➧ 12/97	6K0.121.253 K	**63995A**	528 299 22	P/A
INCA (95-) 1.4 i	G	AEX	M	+		11/95 ➧ 12/97	1H0.121.253 P	**65244A**	625 379 32	P/A
INCA (95-) 1.4 i	G	AKV	M	-		12/97 ➧ 09/00	6K0.121.253 K+	**639951**	528 299 22	ALM
INCA (95-) 1.4 i	G	AKV	M	+		12/97 ➧ 09/00	1H0.121.253 P	**65244A**	625 379 32	P/A
INCA (95-) 1.4 i	G	APQ	M	-		12/97 ➧ 06/03	6K0.121.253 K+	**639951**	528 299 22	ALM
INCA (95-) 1.4 i	G	APQ	M	+		12/97 ➧ 06/03	1H0.121.253 P	**65244A**	625 379 32	P/A
INCA (95-) 1.4 i	G	AUD	M	+/-		09/00 ➧ 06/03	6K0.121.253 AS	**65290**	630 380 23	P/A
INCA (95-) 1.4 i 16V	G	AUA	M	+/-		09/00 ➧ 06/03	6K0.121.253 AS	**65290**	630 380 23	P/A
INCA (95-) 1.6 i	G	1F	M	-		11/95 ➧ 05/97	6K0.121.253 S+	**639961**	525 320 32	ALM
INCA (95-) 1.6 i	G	1F	M	-		11/95 ➧ 05/97	6K0.121.253 S	**63996A**	528 299 22	P/A
INCA (95-) 1.6 i	G	1F	M	+		11/95 ➧ 05/97	1H0.121.253 P	**65244A**	625 379 32	P/A
INCA (95-) 1.6 i	G	AEE	M	-		06/97 ➧ 09/00	6K0.121.253 K+	**639951**	528 299 22	ALM
INCA (95-) 1.6 i	G	AEE	M	+		06/97 ➧ 09/00	1H0.121.253 P	**65244A**	625 379 32	P/A
INCA (95-) 1.7 SDi	D	AHB	M	-		07/96 ➧ 09/00	6K0.121.253 K+	**639951**	528 299 22	ALM
INCA (95-) 1.7 SDi	D	AHB	M	+		07/96 ➧ 09/00	6K0.121.253 AA+	**65245A**	625 379 32	P/A
INCA (95-) 1.7 SDi	D	AHB	M	+		07/96 ➧ 09/00	1H0.121.253 L+	**652451**	628 377 34	ALM
INCA (95-) 1.7 SDi	D	AHB	M	+		07/96 ➧ 09/00	1HM.121.253 D+	**652551**	628 377 34	ALM
INCA (95-) 1.7 SDi	D	AHB	M	+		07/96 ➧ 09/00	1HM.121.253 D	**65255A**	625 379 32	P/A
INCA (95-) 1.9 D	D	1Y	M	-		11/95 ➧ 06/03	6K0.121.253 G+	**652681**	630 299 26	ALM
INCA (95-) 1.9 D	D	1Y	M	-		11/95 ➧ 06/03	6K0.121.253 G+	**65268A**	630 299 26	P/A

RADIATORS

	G/D			AC	Note		OE	Nissens	Dim. H W T	Mat.
SEAT LIGHT VAN (../..)										
INCA (95-) 1.9 D	D	1Y	M	-		11/95 ▸ 06/03	6K0.121.253 T	**67308**	628 322 34	P/A
INCA (95-) 1.9 D	D	1Y	M	+		11/95 ▸ 06/03	1H0.121.253 P	**65244A**	625 379 32	P/A
INCA (95-) 1.9 Sdi	D	AEY	M	-		11/95 ▸ 09/00	6K0.121.253 K+	**639951**	528 299 22	ALM
INCA (95-) 1.9 Sdi	D	AEY	M	+		11/95 ▸ 09/00	6K0.121.253 AA+	**65245A**	625 379 32	P/A
INCA (95-) 1.9 Sdi	D	AYQ	M	+/-		09/00 ▸ 06/03	6K0.121.253 AS	**65290**	630 380 23	P/A
INCA (95-) 1.9 Sdi	D	AYQ	M	+/-		09/00 ▸ 06/03	6K0.121.253 AG	**67301**	645 372 23	P/A
TALBOT LIGHT VAN										
EXPRESS (81-) 1.8	G	XM7T	M	-		01/81 ▸	1300.G0 +	**63561**	663 415 33	M/C
EXPRESS (81-) 1.9 D	D	XUD9A	M	-		01/81 ▸	1300.J9	**63557**	663 415 33	M/C
EXPRESS (81-) 1.9 TD	D	M705T	M	-		01/81 ▸	1300.K3 +	**63558**	663 414 33	M/C
EXPRESS (81-) 2.0	G	XN1T	M	-		01/81 ▸	1300.G0 +	**63561**	663 415 33	M/C
EXPRESS (81-) 2.5 D	D	CRD93	M	-		01/81 ▸	1300.F7 +	**63572**	825 415 33	M/C
EXPRESS (81-) 2.5 TD	D	CRD93LS	M	-		01/81 ▸	1300.K3	**63558**	663 414 33	M/C
TOYOTA LIGHT VAN										
4 RUNNER (85-) 2.4	D	22RE	A	+/-	RN 11#	08/88 ▸ 01/95	16400-35380	**64844**	425 524 41	M/C
4 RUNNER (85-) 2.4	D	22RE	A	+/-	RN 10#	08/98 ▸ 01/95	16400-35380	**64844**	425 524 41	M/C
4 RUNNER (85-) 2.4 i	G	22RE	M	-	RN 10#	08/88 ▸ 01/95	16400-04020+	**64728**	400 526 33	M/C
4 RUNNER (85-) 2.4 i	G	22RE	M	-	RN 11#	08/88 ▸ 01/95	16400-04020+	**64728**	400 526 33	M/C
4 RUNNER (85-) 2.4 i	G	22RE	M	-	RN 8#	08/88 ▸ 01/95	16400-04020+	**64728**	400 526 33	M/C
4 RUNNER (85-) 2.4 i	G	22RE	M	-	RN 9#	08/88 ▸ 01/95	16400-04020+	**64728**	400 526 33	M/C
4 RUNNER (85-) 2.4 i	G	22RE	M	+/-	RN 13#	08/88 ▸ 01/95	16400-35520	**64846**	450 524 41	M/C
4 RUNNER (85-) 2.4 i	G	22REC	M	-	RN 5#	01/85 ▸ 08/85	16400-35290	**64848**	425 524 41	M/C
4 RUNNER (85-) 2.4 i	G	22REC	M	-	RN 6#	01/85 ▸ 08/85	16400-35290	**64848**	425 524 41	M/C
4 RUNNER (85-) 2.4 i	G	22REC	M	-	RN 7#	01/85 ▸ 08/85	16400-35290	**64848**	425 524 41	M/C
4 RUNNER (85-) 2.4 i	G	22REC	M	-	VZN 6#	01/85 ▸ 08/85	16400-35290	**64848**	425 524 41	M/C
4 RUNNER (85-) 2.4 i	G	22REC	M	-	LN 5#	01/85 ▸ 08/85	16400-35290	**64848**	425 524 41	M/C
4 RUNNER (85-) 2.4 i	G	22REC	M	-	LN 6#	01/85 ▸ 08/85	16400-35290	**64848**	425 524 41	M/C
4 RUNNER (85-) 2.4 i	D	22REC	A	+/-	RN 6#	08/85 ▸ 03/93	16400-35380	**64844**	425 524 41	M/C
4 RUNNER (85-) 3.0 i	G	3VZE	M	+/-	VZN 10#	08/88 ▸ 08/89	16400-35520	**64846**	450 524 41	M/C
4 RUNNER (85-) 3.0 i	G	3VZE	M	+/-	VZN 11#	08/88 ▸ 08/89	16400-35520	**64846**	450 524 41	M/C
4 RUNNER (85-) 3.0 i	G	3VZE	M	+/-	VZN 13#	08/88 ▸ 08/89	16400-35520	**64846**	450 524 41	M/C
4 RUNNER (85-) 3.0 i	G	3VZE	M	+/-	VZN 10#	08/89 ▸ 11/95	16400-65040	**64847**	475 524 41	M/C
4 RUNNER (85-) 3.0 i	G	3VZE	M	+/-	VZN 11#	08/89 ▸ 11/95	16400-65040	**64847**	475 524 41	M/C
4 RUNNER (85-) 3.0 i	G	3VZE	M	+/-	VZN 13#	08/89 ▸ 11/95	16400-65040	**64847**	475 524 41	M/C
4 RUNNER (85-) 3.0 i	G	3VZE	A	+/-	VN 6#	11/87 ▸ 08/88	16400-65020	**64869**	460 524 40	M/C
4 RUNNER (95-) 2.7 i	G	3RZFE	M	+/-	RZN 18#	11/95 ▸ 08/00	16400-75160+	**64626A**	575 639 26	P/A
4 RUNNER (95-) 2.7 i	G	3RZFE	M	+/-	RZN 18#	11/95 ▸ 08/00	16400-75160+	**647551**	575 639 28	P/A
4 RUNNER (95-) 2.7 i	G	3RZFE	A	+/-	RZN 18#	11/95 ▸ 08/00	16400-75180+	**64755A**	575 639 26	P/A
4 RUNNER (95-) 3.4 i	G	5VZFE	M	+/-	VZN 18#	11/95 ▸ 08/00	16400-75160+	**64626A**	575 639 26	P/A
4 RUNNER (95-) 3.4 i	G	5VZFE	A	+/-	VZN 18#	11/95 ▸ 08/00	16400-75180+	**64755A**	575 639 26	P/A
DYNA 200 (95-) 3.7 D	D	14B	M	-	BU 10#	05/95 ▸ 09/00	16400-58420	**64751**	470 522 33	M/C
DYNA 200 (95-) 3.7 D	D	14B	M	-	BU 10#	05/95 ▸ 09/00	16400-58460	**64752**	485 590 33	M/C
DYNA 200 (95-) 3.7 D	D	14B	M	-	BU 11#	05/95 ▸ 09/00	16400-58420	**64751**	470 522 33	M/C
DYNA 200 (95-) 3.7 D	D	14B	M	-	BU 11#	05/95 ▸ 09/00	16400-58460	**64752**	485 590 33	M/C
DYNA 200 (95-) 4.1 TD	D	15BF	M	-	BU 10#	05/95 ▸ 09/00	16400-58420	**64751**	470 522 33	M/C
DYNA 200 (95-) 4.1 TD	D	15BF	M	-	BU 10#	05/95 ▸ 09/00	16400-58460	**64752**	485 590 33	M/C
DYNA 200 (95-) 4.1 TD	D	15BF	M	-	BU 11#	05/95 ▸ 09/00	16400-58420	**64751**	470 522 33	M/C
DYNA 200 (95-) 4.1 TD	D	15BF	M	-	BU 11#	05/95 ▸ 09/00	16400-58460	**64752**	485 590 33	M/C

RADIATORS

	G/D			AC	Note		OE	Nissens	Dim. H	W	T	Mat.
TOYOTA LIGHT VAN (../..)												
HI-ACE (84-) 2.4 D	D	2L	M	+/-	LH 51	01/84 ➧ 08/89	16400-54280	**64733**	400	530	55	M/C
HI-ACE (84-) 2.4 D	D	2L	M	+/-	LH 61	01/84 ➧ 08/89	16400-54280	**64733**	400	530	55	M/C
HI-ACE (84-) 2.4 D	D	2L	M	+/-	LH 71	01/84 ➧ 08/89	16400-54280	**64733**	400	530	55	M/C
HI-ACE (89-) 2.0 i	G	1 RZ	M	+/-	RZH 10#	08/89 ➧ 08/95	16400-75071	**64862**	490	407	52	M/C
HI-ACE (89-) 2.0 i	G	1 RZ	M	+/-	RZH 10#	08/89 ➧ 08/95	16400-75071	**64778**	490	409	33	M/C
HI-ACE (89-) 2.0 i	G	1 RZ	M	+/-	RZH 11#	08/89 ➧ 08/95	16400-75071	**64862**	490	407	52	M/C
HI-ACE (89-) 2.0 i	G	1 RZ	M	+/-	RZH 11#	08/89 ➧ 08/95	16400-75071	**64778**	490	409	33	M/C
HI-ACE (89-) 2.4 D	D	2L	M	+/-	LH 10#	08/89 ➧ 08/95	16400-54750+	**64737**	490	406	52	M/C
HI-ACE (89-) 2.4 D	D	2L	M	+/-	LH 10#	08/89 ➧ 08/95	16400-54750+	**64774**	490	409	33	M/C
HI-ACE (89-) 2.4 D	D	2L	M	+/-	LH 11#	08/89 ➧ 08/95	16400-54750+	**64737**	490	406	52	M/C
HI-ACE (89-) 2.4 D	D	2L	M	+/-	LH 12#	08/89 ➧ 08/95	16400-54750+	**64737**	490	406	52	M/C
HI-ACE (89-) 2.4 D	D	2L	A	+/-	LH 10#	08/89 ➧ 08/95		**64808**	490	406	52	M/C
HI-ACE (89-) 2.4 D	D	2L	A	+/-	LH 11#	08/89 ➧ 08/95		**64808**	490	406	52	M/C
HI-ACE (89-) 2.4 D	D	2L	A	+/-	LH 12#	08/89 ➧ 08/95		**64808**	490	406	52	M/C
HI-ACE (89-) 2.4 i	G	2 RZ-E	M	+/-	RZH 10#	03/92 ➧ 08/95	16400-75071	**64778**	490	409	33	M/C
HI-ACE (89-) 2.4 i	G	2 RZ-E	M	+/-	RZH 11#	03/92 ➧ 08/95	16400-75071	**64778**	490	409	33	M/C
HI-ACE (89-) 2.4 i	G	2 RZ-E	M	+/-	RZH 10#	08/89 ➧ 08/95	16400-75071	**64862**	490	407	52	M/C
HI-ACE (89-) 2.4 i	G	2 RZ-E	M	+/-	RZH 11#	08/89 ➧ 08/95	16400-75071	**64862**	490	407	52	M/C
HI-ACE (89-) 2.8 D	D	3L	M	+/-	LH 10#	08/89 ➧ 08/95	16400-54750+	**64737**	490	406	52	M/C
HI-ACE (89-) 2.8 D	D	3L	M	+/-	LH 10#	08/89 ➧ 08/95	16400-54750+	**64774**	490	409	33	M/C
HI-ACE (89-) 2.8 D	D	3L	M	+/-	LH 11#	08/89 ➧ 08/95	16400-54750+	**64737**	490	406	52	M/C
HI-ACE (89-) 2.8 D	D	3L	M	+/-	LH 12#	08/89 ➧ 08/95	16400-54750+	**64737**	490	406	52	M/C
HI-ACE (89-) 2.8 D	D	3L	M	+/-	LH 11#	08/89 ➧ 08/95	16400-54750+	**64774**	490	409	33	M/C
HI-ACE (89-) 2.8 D	D	3L	M	+/-	LH 12#	08/89 ➧ 08/95	16400-54750+	**64774**	490	409	33	M/C
HI-ACE (95-) 2.4 D	D	2L	M	+/-	LXH 1#	08/95 ➧ 08/01	16400-5B320+	**64858A**	525	629	22	P/A
HI-ACE (95-) 2.4 D	D	2L	M	+/-	LXH 2#	08/95 ➧ 08/01	16400-5B320+	**64858A**	525	629	22	P/A
HI-ACE (95-) 2.4 i	G	2RZE	M	+/-	RCH 1#	08/95 ➧ 08/01	16400-5B320+	**64858A**	525	629	22	P/A
HI-ACE (95-) 2.4 i	G	2RZE	M	+/-	RCH 2#	08/95 ➧ 08/01	16400-5B320+	**64858A**	525	629	22	P/A
HI-ACE (95-) 2.4 TD	D	2LT	M	+/-	LXH 1#	08/95 ➧ 08/01	16400-5B330+	**64857A**	525	629	40	P/A
HI-ACE (95-) 2.4 TD	D	2LT	M	+/-	LXH 2#	08/95 ➧ 08/01	16400-5B330+	**64857A**	525	629	40	P/A
HI-ACE (95-) 2.7 i	G	3RZFE	M	+/-	RCH 1#	08/95 ➧ 08/01	16400-5B320+	**64858A**	525	629	22	P/A
HI-ACE (95-) 2.7 i	G	3RZFE	M	+/-	RCH 2#	08/95 ➧ 08/01	16400-5B320+	**64858A**	525	629	22	P/A
HI-ACE (95-) 3.0 i	G	1KZTE	M/A	+/-		08/95 ➧ 08/01	16400-67100	**64859A**	525	629	40	P/A
HI-ACE (01-) 2.5 TD	D	2KDFTV	M	+/-	KLH 1#	08/01 ➧	16400-30110	**64649A**	525	629	22	P/A
HI-ACE (01-) 2.5 TD	D	2KDFTV	M	+/-	KLH 2#	08/01 ➧	16400-30110	**64649A**	525	629	22	P/A
HI-LUX (84-) 1.6	G	1Y	M	+/-	YN 5#	04/84 ➧ 08/86	16400-04020+	**64728**	400	526	33	M/C
HI-LUX (84-) 1.6	G	1Y	M	+/-	YN 6#	08/84 ➧ 08/86	16400-04020+	**64728**	400	526	33	M/C
HI-LUX (84-) 1.6	G	1YC	M	+/-	YN 5#	08/86 ➧ 06/90	16400-04020+	**64728**	400	526	33	M/C
HI-LUX (84-) 1.8	G	2Y	M	+/-	YN 5#	04/84 ➧ 06/90	16400-04020+	**64728**	400	526	33	M/C
HI-LUX (84-) 1.8	G	2Y	M	+/-	YN 6#	08/86 ➧ 06/90	16400-04020+	**64728**	400	526	33	M/C
HI-LUX (84-) 2.0	G	3Y	M	+/-	YN 5#	04/84 ➧ 06/90	16400-04020+	**64728**	400	526	33	M/C
HI-LUX (84-) 2.0	G	3Y	M	+/-	YN 6#	04/84 ➧ 08/86	16400-04020+	**64728**	400	526	33	M/C
HI-LUX (84-) 2.0	G	3Y	M	+/-	YN 5#	08/83 ➧ 04/84	16400-04020+	**64728**	400	526	33	M/C
HI-LUX (84-) 2.2	G	4Y	M	+/-	YN 10#	08/85 ➧ 07/98	16400-04020+	**64728**	400	526	33	M/C
HI-LUX (84-) 2.2	G	4Y	M	+/-	YN 5#	08/86 ➧ 07/98	16400-04020+	**64728**	400	526	33	M/C
HI-LUX (84-) 2.2	G	4Y	M	+/-	YN 6#	08/88 ➧ 08/94	16400-04020+	**64728**	400	526	33	M/C
HI-LUX (84-) 2.4 D	D	2L	M	+/-	LN 5#	08/83 ➧ 08/85	16400-54250	**64614**	425	524	52	M/C
HI-LUX (84-) 2.4 D	D	2L	M	+/-	LN 6#	08/84 ➧ 07/98	16400-54340	**64613**	450	524	52	M/C
HI-LUX (88-) 2.2	G	4Y	M	+/-	YN 11#	08/88 ➧ 08/94	16400-04020+	**64728**	400	526	33	M/C
HI-LUX (88-) 2.4 D	D	2L	M	+/-	LN 8#	01/89 ➧ 04/96	16400-04010	**64845**	450	524	41	M/C

RADIATORS

	G/D			AC	Note		OE	Nissens	Dim. H	W	T	Mat.
TOYOTA LIGHT VAN (../..)												
HI-LUX (88-) 2.4 D	D	2L	M	+/-	LN 9#	08/88 ➧ 04/96	16400-04010	**64845**	450	524	41	M/C
HI-LUX (88-) 2.4 D	D	2L	M	+/-	LN 10#	08/88 ➧ 04/96	16400-04010	**64845**	450	524	41	M/C
HI-LUX (88-) 2.4 D	D	2L	M	+/-	LN 11#	08/88 ➧ 04/96	16400-04010	**64845**	450	524	41	M/C
HI-LUX (88-) 2.4 i	G	22RE	M	+/-	RN 8#	01/94 ➧ 09/99	16400-35210	**64728**	400	526	33	M/C
HI-LUX (88-) 2.4 i	G	22RE	M	+/-	RN 13#	08/88 ➧ 01/95	16400-35520	**64846**	450	524	41	M/C
HI-LUX (88-) 2.8 D	D	3L	M	+/-	LN 8#	08/88 ➧ 04/96	16400-04010	**64845**	450	524	41	M/C
HI-LUX (88-) 2.8 D	D	3L	M	+/-	LN 9#	08/88 ➧ 04/96	16400-04010	**64845**	450	524	41	M/C
HI-LUX (88-) 2.8 D	D	3L	M	+/-	LN 13#	08/88 ➧ 04/96	16400-04010	**64845**	450	524	41	M/C
HI-LUX (88-) 2.8 D	D	3L	M	+/-	LN 11#	08/88 ➧ 08/89	16400-04010	**64845**	450	524	41	M/C
HI-LUX (88-) 2.8 D	D	3L	M	+/-	LN 10#	08/88 ➧ 08/90	16400-04010	**64845**	450	524	41	M/C
HI-LUX (88-) 3.0 i	G	3VZE	M	+/-	VZN 13#	08/89 ➧ 11/95	16400-65040	**64847**	475	524	41	M/C
HI-LUX (88-) 3.0 i	G	3VZE	M	+/-	VZN 10#	08/89 ➧ 11/95	16400-65040	**64847**	475	524	41	M/C
HI-LUX (88-) 3.0 i	G	3VZE	M	+/-	VZN 11#	08/89 ➧ 11/95	16400-65040	**64847**	475	524	41	M/C
HI-LUX (97-) 2.4 TD	D	2LT	M	+/-	KDN 1##	08/97 ➧ 08/01	16400-5B620	**64698**	550	540	37	M/C
HI-LUX (97-) 2.4 TD	D	2LT	M	+/-	LN ##	08/97 ➧ 08/01	16400-5B620	**64698**	550	540	37	M/C
HI-LUX (97-) 2.4 TD	D	2LT	M	+/-	RZN 16#	08/97 ➧ 08/01	16400-5B620	**64698**	550	540	37	M/C
HI-LUX (97-) 2.4 TD	D	2LT	M	+/-	RZN 17#	08/97 ➧ 08/01	16400-5B620	**64698**	550	540	37	M/C
HI-LUX (01-) 2.5 TD	D	2KDFTV	M	+/-	KDN 145	08/01 ➧	16400-30080	**64599A**	450	529	32	P/A
HI-LUX (01-) 2.5 TD	D	2KDFTV	M	+/-	KDN 150	08/01 ➧	16400-30080	**64599A**	450	529	32	P/A
LAND CRUISER 100 (98-) 4.2 D	D	1HZ	A	+/-	HZJ 105	01/98 ➧	16400-66140	**64817**	510	691	42	X
LAND CRUISER 100 (98-) 4.2 TD	D	1HDFTE	M	+/-	HDJ 100	08/00 ➧ 08/02	16400-17320+	**64818**	425	691	42	X
LAND CRUISER 100 (98-) 4.2 TD	D	1HDFTE	A	+/-	HDJ 100	08/00 ➧ 08/02	16400-17330+	**64818**	425	691	42	X
LAND CRUISER 100 (98-) 4.2 TD	D	1HDT	M	+/-	HDJ 100	01/98 ➧ 08/02	16400-66110+	**64881**	704	510	36	P/A
LAND CRUISER 100 (98-) 4.2 TD	D	1HDT	A	+/-	HDJ 100	01/98 ➧ 08/02	16400-66120+	**64881**	704	510	36	P/A
LAND CRUISER 100 (98-) 4.5	G	1FZFE	M	+/-	FZJ 100	01/98 ➧	16400-66110+	**64881**	704	510	36	P/A
LAND CRUISER 100 (98-) 4.5	G	1FZFE	A	+/-	FZJ 100	01/98 ➧	16400-66120+	**64881**	704	510	36	P/A
LAND CRUISER 100 (98-) 4.5	G	1FZFE	A	+/-	FZJ 105	01/98 ➧	16400-66140	**64817**	510	691	42	X
LAND CRUISER 100 (98-) 4.7 i V8 32V	G	2UZFE	M/A	+/-	UZJ 100	01/98 ➧	16400-50210+	**64882**	704	510	48	P/A
LAND CRUISER 70 (84-) 4.0	G	3F	M	+/-	FJ 7#	11/84 ➧ 08/92	16400-61070	**64650**	450	530	70	M/C
LAND CRUISER 80 (90-) 4.2 D	D		A	+		01/90 ➧ 08/92	16400-17030+	**64861**	425	722	50	M/C
LAND CRUISER 80 (90-) 4.2 TD	D		A	+		01/90 ➧ 04/96	16400-17060	**64861**	425	722	50	M/C
LAND CRUISER 90 (96-) 3.0 TD	D	1KDFTV	M	+/-	KZJ 9#	04/96 ➧ 09/02	16400-67130	**64636A**	575	639	26	P/A
LAND CRUISER 90 (96-) 3.0 TD	D	1KDFTV	M	+/-	KDJ 9#	04/96 ➧ 09/02	16400-67130	**64636A**	575	639	26	P/A
LAND CRUISER 90 (96-) 3.0 TD	D	1KDFTV	A	+/-	KDJ 9#	04/96 ➧ 09/02	16400-67121	**64637A**	575	639	26	P/A
LAND CRUISER 90 (96-) 3.0 TD	D	1KDFTV	A	+/-	KZJ 9#	04/96 ➧ 09/02	16400-67121	**64637A**	575	639	26	P/A
LAND CRUISER 90 (96-) 3.0 TD	D	1KZTE	M	+/-	KZJ 9#	04/96 ➧ 09/02	16400-67130	**64636A**	575	639	26	P/A
LAND CRUISER 90 (96-) 3.0 TD	D	1KZTE	M	+/-	KDJ 9#	04/96 ➧ 09/02	16400-67130	**64636A**	575	639	26	P/A
LAND CRUISER 90 (96-) 3.0 TD	D	1KZTE	A	+/-	KDJ 9#	04/96 ➧ 09/02	16400-67121	**64637A**	575	639	26	P/A
LAND CRUISER 90 (96-) 3.0 TD	D	1KZTE	A	+/-	KZJ 9#	04/96 ➧ 09/02	16400-67121	**64637A**	575	639	26	P/A
LAND CRUISER 90 (96-) 3.4 i	G	5VZFE	M	+/-	VZJ 9#	04/96 ➧ 09/02	16400-75160+	**64626A**	575	639	26	P/A
LAND CRUISER 90 (96-) 3.4 i	G	5VZFE	M	+/-	VZJ 9#	04/96 ➧ 09/02	16400-75160+	**647551**	575	639	28	P/A
LAND CRUISER 90 (96-) 3.4 i	G	5VZFE	A	+/-	VZJ 9#	04/96 ➧ 09/02	16400-75180+	**64755A**	575	639	26	P/A
LAND CRUISER PRADO (02-) 3.0 TD	G	1KZTE	A	+	KZJ 120	09/02 ➧	16400-50310+	**64661**	0	0	0	P/A
LITE-ACE (85-) 1.5	G	5K	M	-	KM 3#	09/85 ➧ 01/90	16400-13380	**64709**	530	350	32	M/C
LITE-ACE (85-) 1.8 D	D	1C	M	-	CM 3#	09/85 ➧ 04/90	16400-64331	**64708**	550	350	38	M/C
LITE-ACE (85-) 2.0 D	D	2C	M	-	CM 3#	09/85 ➧ 04/90	16400-64331	**64708**	550	350	38	M/C
LITE-ACE (92-) 2.2 i	G	4YEC	M	-	YR 2#	01/92 ➧ 10/96	16400-73150	**64707**	550	350	38	M/C
SIENNA (97-) 3.0 i V6 24V	G	1MZFE	A	+/-		08/97 ➧ 08/00	16400-0A071+	**64627A**	450	730	26	P/A

RADIATORS

	G/D			AC	Note		OE	Nissens	Dim. H	W	T	Mat.
TOYOTA LIGHT VAN (../..)												
TACOMA (95-) 2.4 i	G	2RZFE	M	+/-		01/95 ➧ 09/03	16410-0C010+	**64624A**	475	639	26	P/A
TACOMA (95-) 2.7 i	G	3RZFE	M/A	+/-	VZN 190	02/98 ➧ 09/01	16410-0C040+	**64622A**	575	639	26	P/A
TACOMA (95-) 3.4 i	G	5VZFE	M/A	+/-	VZN 190	02/98 ➧ 09/03	16410-0C040+	**64622A**	575	639	26	P/A
TACOMA (95-) 3.4 i	G	5VZFE	A	+/-	VZN 150	01/95 ➧ 09/00	16410-07060+	**64623A**	525	639	26	P/A
TOYOTA LIFT												
6FG20	D					01/94 ➧	16410-13600	**64865**	500	430	65	P/C
VOLKSWAGEN LIGHT VAN												
CADDY (82-) 1.5	G	JB	M	-		10/82 ➧ 10/83	321.121.253 AL+	**651511**	525	320	32	ALM
CADDY (82-) 1.5	G	JB	M	-		10/82 ➧ 10/83	321.121.253 AL	**65151A**	527	322	22	P/A
CADDY (82-) 1.6	G	EM	M	-		10/82 ➧ 10/83	321.121.253 AL+	**651511**	525	320	32	ALM
CADDY (82-) 1.6	G	EW	M	-		08/83 ➧ 07/92	321.121.253 AL+	**651511**	525	320	32	ALM
CADDY (82-) 1.6	G	EW	A	-		08/83 ➧ 07/92	321.121.253 AL+	**651511**	525	320	32	ALM
CADDY (82-) 1.6	G	HN	M	-		08/83 ➧ 07/89	321.121.253 AL+	**651511**	525	320	32	ALM
CADDY (82-) 1.6	G	HN	A	-		08/83 ➧ 07/89	321.121.253 AL+	**651511**	525	320	32	ALM
CADDY (82-) 1.6 D	D	JK	M	-		10/82 ➧ 07/90	171.121.253 CL	**65264**	574	302	33	P/C
CADDY (82-) 1.6 D	D	ME	M	-		08/90 ➧ 07/92	171.121.253 CL	**65264**	574	302	33	P/C
CADDY (82-) 1.8	G	JH	M	-		08/85 ➧ 07/92	321.121.253 AL+	**651511**	525	320	32	ALM
CADDY (82-) 1.8	G	JH	A	-		08/85 ➧ 07/92	321.121.253 AL+	**651511**	525	320	32	ALM
CADDY (95-) 1.4 i	G	AEX	M	-		11/95 ➧ 12/97	6K0.121.253 K+	**639951**	528	299	22	ALM
CADDY (95-) 1.4 i	G	AEX	M	-		11/95 ➧ 12/97	6K0.121.253 K	**63995A**	528	299	22	P/A
CADDY (95-) 1.4 i	G	AKV	M	-		11/97 ➧ 09/00	6K0.121.253 K+	**639951**	528	299	22	ALM
CADDY (95-) 1.4 i	G	APQ	M	-		12/97 ➧ 06/03	6K0.121.253 K+	**639951**	528	299	22	ALM
CADDY (95-) 1.4 i	G	AUD	M	-		09/00 ➧ 06/03	6K0.121.253 AS	**65290**	630	380	23	P/A
CADDY (95-) 1.4 i 16V	G	AUA	M	-		09/00 ➧ 06/03	6K0.121.253 AS	**65290**	630	380	23	P/A
CADDY (95-) 1.6 i	G	1F	M	-		11/95 ➧ 05/97	6K0.121.253 S+	**639961**	525	320	32	ALM
CADDY (95-) 1.6 i	G	1F	M	-		11/95 ➧ 05/97	6K0.121.253 S	**63996A**	528	299	22	P/A
CADDY (95-) 1.6 i	G	1F	M	+		11/95 ➧ 05/97	1H0.121.253 P	**65244A**	625	379	32	P/A
CADDY (95-) 1.6 i	G	AEE	M	-		06/97 ➧ 09/00	6K0.121.253 K+	**639951**	528	299	22	ALM
CADDY (95-) 1.7 SDi	D	AHB	M	-		07/96 ➧ 09/00	6K0.121.253 K+	**639951**	528	299	22	ALM
CADDY (95-) 1.7 SDi	D	AHB	M	+		07/96 ➧ 09/00	6K0.121.253 AA+	**65245A**	625	379	32	P/A
CADDY (95-) 1.7 SDi	D	AHB	M	+		07/96 ➧ 09/00	1H0.121.253 L+	**652451**	628	377	34	ALM
CADDY (95-) 1.7 SDi	D	AHB	M	+		07/96 ➧ 09/00	1HM.121.253 D+	**652551**	628	377	34	ALM
CADDY (95-) 1.7 SDi	D	AHB	M	+		07/96 ➧ 09/00	1HM.121.253 D	**65255A**	625	379	32	P/A
CADDY (95-) 1.9 D	D	1Y	M	-		11/95 ➧ 06/03	6K0.121.253 G+	**652681**	630	299	26	ALM
CADDY (95-) 1.9 D	D	1Y	M	-		11/95 ➧ 06/03	6K0.121.253 G+	**65268A**	630	299	26	P/A
CADDY (95-) 1.9 D	D	1Y	M	-		11/95 ➧ 06/03	6K0.121.253 T	**67308**	628	322	34	P/A
CADDY (95-) 1.9 D	D	1Y	M	+		11/95 ➧ 06/03	1H0.121.253 P	**65244A**	625	379	32	P/A
CADDY (95-) 1.9 Sdi	D	AEY	M	-		11/95 ➧ 09/00	6K0.121.253 K+	**639951**	528	299	22	ALM
CADDY (95-) 1.9 Sdi	D	AEY	M	+		11/95 ➧ 09/00	6K0.121.253 AA+	**65245A**	625	379	32	P/A
CADDY (95-) 1.9 Sdi	D	AYQ	M	+/-		09/00 ➧ 06/03	6K0.121.253 AS	**65290**	630	380	23	P/A
CADDY (95-) 1.9 Sdi	D	AYQ	M	+/-		09/00 ➧ 06/03	6K0.121.253 AG	**67301**	645	372	23	P/A
CADDY (95-) 1.9 TDi	D	1Z	M	-		10/96 ➧ 03/97	6K0.121.253 AC+	**673001**	630	299	22	ALM
CADDY (95-) 1.9 TDi	D	1Z	M	-		10/96 ➧ 03/97	6K0.121.253 AC	**67300A**	630	299	22	P/A
CADDY (95-) 1.9 TDi	D	1Z	M	+		10/96 ➧ 03/97	6K0.121.253 AA+	**65245A**	625	379	32	P/A
CADDY (95-) 1.9 TDi	D	AHU	M	-	90 HP	10/96 ➧ 09/00	6K0.121.253 AC+	**673001**	630	299	22	ALM
CADDY (95-) 1.9 TDi	D	AHU	M	+		10/96 ➧ 09/00	6K0.121.253 AA+	**65245A**	625	379	32	P/A
CADDY (95-) 1.9 TDi	D	ALE	M	-		09/97 ➧ 09/00	6K0.121.253 AC+	**673001**	630	299	22	ALM
CADDY (95-) 1.9 TDi	D	ALE	M	+		09/97 ➧ 09/00	6K0.121.253 AA+	**65245A**	625	379	32	P/A
CADDY (95-) 1.9 TDi	D	ALH	M	-		09/00 ➧ 06/03	6K0.121.253 AS	**65290**	630	380	23	P/A

RADIATORS

	G/D			AC	Note		OE	Nissens	Dim. H W T	Mat.
VOLKSWAGEN LIGHT VAN (../..)										
CADDY (04-) 1.4 i 16V	G	BCA	M	+/-		02/04 ➧	1K0.121.251 P+	**65277**	650 418 26	P/C
CADDY (04-) 1.4 i 16V	G	BCA	M	+/-		02/04 ➧	1K0.121.251 P	**65277A**	650 418 26	P/A
CADDY (04-) 1.6 i	G	BGU	M	+/-		04/04 ➧	1K0.121.251 P+	**65277**	650 418 26	P/C
CADDY (04-) 1.6 i	G	BSE	M	+/-		04/04 ➧	1K0.121.251 P+	**65277**	650 418 26	P/C
CADDY (04-) 1.6 i	G	BSF	M	+/-		04/04 ➧	1K0.121.251 P+	**65277**	650 418 26	P/C
CADDY (04-) 1.9 TDi	D	BJB	M	+/-	105 HP	02/04 ➧	1K0.121.253 H	**65280A**	650 405 29	P/A
CADDY (04-) 1.9 TDi	D	BLS	M	+/-	105 HP	02/04 ➧	1K0.121.253 H	**65280A**	650 405 29	P/A
CADDY (04-) 1.9 TDi	D	BSU	M	+/-		02/04 ➧	1K0.121.253 H	**65280A**	650 405 29	P/A
CADDY (04-) 2.0 GAS	G	BSX	M	+/-		02/04 ➧	1K0.121.251 P+	**65277**	650 418 26	P/C
CADDY (04-) 2.0 SDI	D	BDJ	M	+/-		02/04 ➧	1K0.121.251 P+	**65277**	650 418 26	P/C
CADDY (04-) 2.0 SDI	D	BST	M	+/-		02/04 ➧	1K0.121.251 P+	**65277**	650 418 26	P/C
LT (82-) 2.4	G	1E	M	-		10/88 ➧ 07/96	075.121.253 D+	**65221**	565 543 45	P/A
LT (82-) 2.4	G	DL	M	-		12/82 ➧ 07/92	075.121.253 D+	**65221**	565 543 45	P/A
LT (82-) 2.4	G	HS	M	-		04/83 ➧ 07/86	075.121.253 D+	**65221**	565 543 45	P/A
LT (82-) 2.4 D	D	1S	M	-		08/89 ➧ 07/92	075.121.253 D+	**65221**	565 543 45	P/A
LT (82-) 2.4 D	D	ACT	M	-		08/92 ➧ 07/96	075.121.253 D+	**65221**	565 543 45	P/A
LT (82-) 2.4 D	D	DW	M	-		12/82 ➧ 07/92	075.121.253 D+	**65221**	565 543 45	P/A
LT (82-) 2.4 TD	D	1G	M	-		08/88 ➧ 08/92	075.121.253 D+	**65221**	565 543 45	P/A
LT (82-) 2.4 TD	D	ACL	M	-		08/92 ➧ 07/96	075.121.253 D+	**65221**	565 543 45	P/A
LT (82-) 2.4 TD	D	DV	M	-		12/82 ➧ 08/92	075.121.253 D+	**65221**	565 543 45	P/A
LT (96-) 2.3 i	G	AGL	M	+/-		05/96 ➧ 11/01	2D0.121.253+	**65231**	682 415 34	P/A
LT (96-) 2.3 i	G	AGL	M	+/-		05/96 ➧ 11/01	2D0.121.253+	**65231A**	679 399 26	P/A
LT (96-) 2.5 SDI	D	AGX	M	+/-		05/96 ➧ 04/01	2D0.121.253+	**65231**	682 415 34	P/A
LT (96-) 2.5 TDi	D	AHD	M	+/-		05/96 ➧ 05/99	2D0.121.253+	**65231**	682 415 34	P/A
LT (96-) 2.5 TDi	D	ANJ	M	+/-		05/99 ➧ 05/03	2D0.121.253+	**65231**	682 415 34	P/A
LT (96-) 2.5 TDi	D	APA	M	+/-		05/99 ➧ 04/01	2D0.121.253+	**65231**	682 415 34	P/A
LT (96-) 2.5 TDi	D	AVR	M	+/-		12/02 ➧ 05/03	2D0.121.253+	**65231**	682 415 34	P/A
LT (96-) 2.5 TDi	D	BBE	M	+/-		04/01 ➧ 05/03	2D0.121.253+	**65231**	682 415 34	P/A
LT (96-) 2.5 TDi	D	BBF	M	+/-		04/01 ➧ 05/03	2D0.121.253+	**65231**	682 415 34	P/A
LT (96-) 2.8 T-D	D	BCQ	M	+/-		05/02 ➧ 05/03	2D0.121.253+	**65231**	682 415 34	P/A
LT (96-) 2.8 TDi	D	AGK	M	+/-		07/97 ➧ 12/98	2D0.121.253+	**65231**	682 415 34	P/A
LT (96-) 2.8 TDi	D	ATA	M	+/-		01/99 ➧ 01/02	2D0.121.253+	**65231**	682 415 34	P/A
LT (96-) 2.8 TDi	D	AUH	M	+/-		02/02 ➧ 05/03	2D0.121.253+	**65231**	682 415 34	P/A
LT (03-) 2.5 TDi	D	ANJ	M	-		06/03 ➧	2D0.121.253+	**65231**	682 415 34	P/A
LT (03-) 2.5 TDi	D	ANJ	M	-		06/03 ➧	2D0.121.253+	**65231A**	679 399 26	P/A
LT (03-) 2.5 TDi	D	ANJ	M	+		06/03 ➧	2D0.121.253+	**65231**	682 415 34	P/A
LT (03-) 2.5 TDi	D	AVR	M	-		06/03 ➧	2D0.121.253+	**65231**	682 415 34	P/A
LT (03-) 2.5 TDi	D	AVR	M	+		06/03 ➧	2D0.121.253+	**65231**	682 415 34	P/A
LT (03-) 2.5 TDi	D	BBE	M	-		01/04 ➧	2D0.121.253+	**65231**	682 415 34	P/A
LT (03-) 2.5 TDi	D	BBE	M	+		01/04 ➧	2D0.121.253+	**65231**	682 415 34	P/A
LT (03-) 2.5 TDi	D	BBF	M	-		01/04 ➧	2D0.121.253+	**65231**	682 415 34	P/A
LT (03-) 2.5 TDi	D	BBF	M	+		01/04 ➧	2D0.121.253+	**65231**	682 415 34	P/A
LT (03-) 2.8 TD	D	BCQ	M	-		06/03 ➧	2D0.121.253+	**65231**	682 415 34	P/A
LT (03-) 2.8 TD	D	BCQ	M	+		06/03 ➧	2D0.121.253+	**65231**	682 415 34	P/A
LT (03-) 2.8 TDi	D	AUH	M	-		06/03 ➧	2D0.121.253+	**65231**	682 415 34	P/A
LT (03-) 2.8 TDi	D	AUH	M	+		06/03 ➧	2D0.121.253+	**65231**	682 415 34	P/A
TARO (89-) 2.4 D	D	2.4	M	-		03/89 ➧	16400-04010	**64845**	450 524 41	M/C
TOUAREG (02-) 2.5 TDi	D	AHY	M/A	+/-		07/03 ➧	7L6.121.253	**65275**	710 551 40	P/A
TOUAREG (02-) 2.5 TDi	D	BAC	M/A	+/-		01/03 ➧	7L6.121.253	**65275**	710 551 40	P/A
TOUAREG (02-) 2.5 TDi	D	BLK	M/A	+/-		07/03 ➧	7L6.121.253	**65275**	710 551 40	P/A

RADIATORS

	G/D			AC	Note		OE	Nissens	Dim. H	W	T	Mat.
VOLKSWAGEN LIGHT VAN (../..)												
TOUAREG (02-) 2.5 TDi	D	BPD	M/A	+/-		07/03 ➧	7L6.121.253	**65275**	710	551	40	P/A
TOUAREG (02-) 2.5 TDi	D	BPE	M/A	+/-		07/03 ➧	7L6.121.253	**65275**	710	551	40	P/A
TOUAREG (02-) 3.0 TDi	G	BKS	M/A	+/-		11/04 ➧	7L0.121.253 +	**63758**	710	551	40	P/A
TOUAREG (02-) 3.2 i V6	G	AZZ	M/A	+/-		11/02 ➧ 05/04	7L0.121.253 +	**63758**	710	551	40	P/A
TOUAREG (02-) 3.2 i V6	G	BKJ	M/A	+/-		05/03 ➧ 05/04	7L0.121.253 +	**63758**	710	551	40	P/A
TOUAREG (02-) 3.2 i V6	G	BMV	M/A	+/-		05/04 ➧	7L0.121.253 +	**63758**	710	551	40	P/A
TOUAREG (02-) 3.2 i V6	G	BMX	M/A	+/-		05/04 ➧	7L0.121.253 +	**63758**	710	551	40	P/A
TOUAREG (02-) 3.2 i V6	G	BRJ	M/A	+/-		05/04 ➧	7L0.121.253 +	**63758**	710	551	40	P/A
TOUAREG (02-) 3.2 i V6	G	BAA	A	+/-		08/03 ➧ 05/04	7L0.121.253 +	**63758**	710	551	40	P/A
TOUAREG (02-) 3.6 FSI	G	BHK	M/A	+/-		05/04 ➧	7L0.121.253 +	**63758**	710	551	40	P/A
TOUAREG (02-) 3.6 FSI	G	BHL	M/A	+/-		05/04 ➧	7L0.121.253 +	**63758**	710	551	40	P/A
TOUAREG (02-) 4.2 i V8 40V	G	AXQ	A	+/-		12/02 ➧	7L0.121.253 +	**63758**	710	551	40	P/A
TOUAREG (02-) 5.0 TDi	D	AYH	A	+/-		11/02 ➧	7L6.121.253 A+	**65276**	710	551	40	P/A
TOUAREG (02-) 5.0 TDi	D	BLE	A	+/-		11/04 ➧	7L6.121.253 A+	**65276**	710	551	40	P/A
TOUAREG (02-) 5.0 TDi	D	BWF	A	+/-		11/04 ➧	7L6.121.253 A+	**65276**	710	551	40	P/A
TOUAREG (02-) 6.0 WR12	G	BJN	A	+/-		08/04 ➧	7L6.121.253 E	**65276**	710	551	40	P/A
TOURAN (03-) 1.6 FSI	G	BAG	M	+	HD	02/03 ➧	1K0.121.251 E+	**65278**	650	418	34	P/C
TOURAN (03-) 1.6 FSI	G	BAG	M	+	HD	02/03 ➧	1K0.121.251 E+	**65278A**	650	418	26	P/A
TOURAN (03-) 1.6 FSI	G	BAG	M	+/-		02/03 ➧		**65277A**	650	418	26	P/A
TOURAN (03-) 1.6 FSI	G	BAG	A	+/-		02/03 ➧	1K0.121.251 E+	**65278**	650	418	34	P/C
TOURAN (03-) 1.6 FSI	G	BLP	M	+	HD	02/03 ➧	1K0.121.251 E+	**65278**	650	418	34	P/C
TOURAN (03-) 1.6 FSI	G	BLP	M	+/-		02/03 ➧		**65277A**	650	418	26	P/A
TOURAN (03-) 1.6 FSI	G	BLP	A	+/-		02/03 ➧	1K0.121.251 E+	**65278**	650	418	34	P/C
TOURAN (03-) 1.6 i 16V	G	BGU	M	+/-		02/03 ➧	1K0.121.251 P+	**65277**	650	418	26	P/C
TOURAN (03-) 1.6 i 16V	G	BGU	A	+/-		02/03 ➧	1K0.121.251 E+	**65278**	650	418	34	P/C
TOURAN (03-) 1.6 i 16V	G	BLF	M	+/-		02/03 ➧	1K0.121.251 P+	**65277**	650	418	26	P/C
TOURAN (03-) 1.6 i 16V	G	BLF	A	+/-		02/03 ➧	1K0.121.251 E+	**65278**	650	418	34	P/C
TOURAN (03-) 1.6 i 16V	G	BSE	M	+/-		02/03 ➧	1K0.121.251 P+	**65277**	650	418	26	P/C
TOURAN (03-) 1.6 i 16V	G	BSF	M	+/-		02/03 ➧	1K0.121.251 P+	**65277**	650	418	26	P/C
TOURAN (03-) 1.9 TDi	D	AVQ	M	+	HD	02/03 ➧	1K0.121.251 L	**65279A**	650	445	32	P/A
TOURAN (03-) 1.9 TDi	D	AVQ	M	+/-		02/03 ➧	1K0.121.253 H	**65280A**	650	405	29	P/A
TOURAN (03-) 1.9 TDi	D	BKC	M/A	-		02/03 ➧	1K0.121.253 H	**65280A**	650	405	29	P/A
TOURAN (03-) 1.9 TDi	D	BKC	M/A	+		02/03 ➧	1K0.121.251 L	**65279A**	650	445	32	P/A
TOURAN (03-) 1.9 TDi	D	BRU	M/A	-		02/03 ➧	1K0.121.253 H	**65280A**	650	405	29	P/A
TOURAN (03-) 1.9 TDi	D	BRU	M/A	+		02/03 ➧	1K0.121.251 L	**65279A**	650	445	32	P/A
TOURAN (03-) 2.0 FSi	G	AXW	M/A	+/-		02/03 ➧	1K0.121.251 E+	**65278**	650	418	34	P/C
TOURAN (03-) 2.0 FSi	G	BLR	M/A	+/-		02/03 ➧	1K0.121.251 E+	**65278**	650	418	34	P/C
TOURAN (03-) 2.0 GAS	G	BSX	M	+/-		02/03 ➧		**65277A**	650	418	26	P/A
TOURAN (03-) 2.0 PD TDi	D	AZV	M/A	+		02/03 ➧	1K0.121.251 N+	**65281**	650	418	32	P/C
TOURAN (03-) 2.0 PD TDi	D	AZV	M/A	+		02/03 ➧	1K0.121.251 N	**65281A**	650	418	32	P/A
TOURAN (03-) 2.0 PD TDi	D	BKD	M/A	+		02/03 ➧	1K0.121.251 N+	**65281**	650	418	32	P/C
TOURAN (03-) 2.0 PD TDi	D	BLY	M/A	+		02/03 ➧	1K0.121.251 N+	**65281**	650	418	32	P/C
TOURAN (03-) 2.0 PD TDi	D	BMM	M/A	+		02/03 ➧	1K0.121.251 N+	**65281**	650	418	32	P/C
TOURAN (03-) 2.0 PD TDi	D	BMN	M/A	+		02/03 ➧	1K0.121.251 N+	**65281**	650	418	32	P/C
TRANSPORTER T3 (79-) 1.6 D	D	CS	M	-		01/81 ➧ 08/82	068.121.253 A	**65230**	570	440	44	M/C
TRANSPORTER T3 (79-) 1.6 D	D	CS	M	-		08/82 ➧ 08/87	068.121.253 B+	**65239**	568	430	42	P/C
TRANSPORTER T3 (79-) 1.6 D	D	KY	M	-		01/81 ➧ 08/82	068.121.253 A	**65230**	570	440	44	M/C
TRANSPORTER T3 (79-) 1.6 D	D	KY	M	-		08/82 ➧ 08/87	068.121.253 B+	**65239**	568	430	42	P/C
TRANSPORTER T3 (79-) 1.6 TD	D	JX	M	-		09/84 ➧ 09/90	068.121.253 B+	**65239**	568	430	42	P/C
TRANSPORTER T3 (79-) 1.9	G	DF	M	-		08/82 ➧ 09/90	068.121.253 B+	**65239**	568	430	42	P/C
TRANSPORTER T3 (79-) 1.9	G	DG	M	-		08/82 ➧ 09/90	068.121.253 B+	**65239**	568	430	42	P/C

RADIATORS

	G/D			AC	Note		OE	Nissens	Dim. H W T	Mat.
VOLKSWAGEN LIGHT VAN (../..)										
TRANSPORTER T3 (79-) 1.9	G	DH	M	-		08/82 ➧ 09/90	068.121.253 B+	**65239**	568 430 42	P/C
TRANSPORTER T3 (79-) 1.9	G	GW	M	-		08/82 ➧ 09/90	068.121.253 B+	**65239**	568 430 42	P/C
TRANSPORTER T3 (79-) 2.1	G	DJ	M	-		08/85 ➧ 09/90	068.121.253 B+	**65239**	568 430 42	P/C
TRANSPORTER T3 (79-) 2.1	G	MV	M	-		08/85 ➧ 09/90	068.121.253 B+	**65239**	568 430 42	P/C
TRANSPORTER T3 (79-) 2.1	G	SS	M	-		08/85 ➧ 09/90	068.121.253 B+	**65239**	568 430 42	P/C
TRANSPORTER T4 (90-) 1.8 i	G	PD	M	-		09/90 ➧ 07/92	701.121.253 +	**65184**	720 302 33	P/C
TRANSPORTER T4 (90-) 1.8 i	G	PD	M	-		09/90 ➧ 07/92	+	**65242A**	718 359 32	P/A
TRANSPORTER T4 (90-) 1.8 i	G	PD	M	-		09/90 ➧ 07/92	701.121.253 K+	**65273**	721 378 34	P/A
TRANSPORTER T4 (90-) 1.9 D	D	1X	M	-		09/90 ➧ 07/94	701.121.253 +	**65184**	720 302 33	P/C
TRANSPORTER T4 (90-) 1.9 D	D	1X	M	-		09/90 ➧ 12/95	+	**65242A**	718 359 32	P/A
TRANSPORTER T4 (90-) 1.9 TD	D	ABL	M	+/-		09/96 ➧ 06/03	7D0.121.253	**65238A**	720 414 32	P/A
TRANSPORTER T4 (90-) 1.9 TD	D	ABL	M	+/-		10/92 ➧ 06/03	701.121.253 K+	**65242A**	718 359 32	P/A
TRANSPORTER T4 (90-) 2.0 i	G	AAC	M/A	+/-		09/90 ➧ 06/03	701.121.253 D+	**65242A**	718 359 32	P/A
TRANSPORTER T4 (90-) 2.0 i	G	AAC	M/A	+/-		09/96 ➧ 06/03	7D0.121.253	**65238A**	720 414 32	P/A
TRANSPORTER T4 (90-) 2.0 i	G	AAC	M	+/-		09/90 ➧ 07/94	701.121.253 +	**65184**	720 302 33	P/C
TRANSPORTER T4 (90-) 2.4 D	D	AJA	M/A	+/-		04/97 ➧ 06/03	7D0.121.253	**65238A**	720 414 32	P/A
TRANSPORTER T4 (90-) 2.4 D	D	AJA	M/A	+/-		04/97 ➧ 06/03	701.121.253 K+	**65242A**	718 359 32	P/A
TRANSPORTER T4 (90-) 2.4 D	D	AAB	M	-		09/90 ➧ 07/94	701.121.253 +	**65184**	720 302 33	P/C
TRANSPORTER T4 (90-) 2.4 D	D	AAB	M	+/-		09/90 ➧ 04/98	+	**65242A**	718 359 32	P/A
TRANSPORTER T4 (90-) 2.4 D	D	AAB	M	+/-		09/96 ➧ 04/98	7D0.121.253	**65238A**	720 414 32	P/A
TRANSPORTER T4 (90-) 2.5 i	G	ACU	M/A	-		02/94 ➧ 07/94	701.121.253 +	**65184**	720 302 33	P/C
TRANSPORTER T4 (90-) 2.5 i	G	ACU	M/A	+/-		02/94 ➧ 10/96	+	**65242A**	718 359 32	P/A
TRANSPORTER T4 (90-) 2.5 i	G	AEN	M/A	+/-		05/95 ➧ 12/95	701.121.253 D+	**65242A**	718 359 32	P/A
TRANSPORTER T4 (90-) 2.5 i	G	AET	M/A	+/-		08/96 ➧ 06/03	701.121.253 K+	**65242A**	718 359 32	P/A
TRANSPORTER T4 (90-) 2.5 i	G	AET	M/A	+/-		08/96 ➧ 06/03	7D0.121.253	**65238A**	720 414 32	P/A
TRANSPORTER T4 (90-) 2.5 i	G	AEU	M/A	+/-		08/96 ➧ 06/03	7D0.121.253	**65238A**	720 414 32	P/A
TRANSPORTER T4 (90-) 2.5 i	G	AEU	M/A	+/-		08/96 ➧ 06/03	701.121.253 K+	**65242A**	718 359 32	P/A
TRANSPORTER T4 (90-) 2.5 i	G	APL	M/A	+/-		05/99 ➧ 12/99	7D0.121.253	**65238A**	720 414 32	P/A
TRANSPORTER T4 (90-) 2.5 i	G	APL	M/A	+/-		05/99 ➧ 12/99	701.121.253 D+	**65242A**	718 359 32	P/A
TRANSPORTER T4 (90-) 2.5 i	G	AVT	M/A	+/-		12/99 ➧ 06/03	701.121.253 K+	**65242A**	718 359 32	P/A
TRANSPORTER T4 (90-) 2.5 i	G	AVT	M/A	+/-		12/99 ➧ 06/03	7D0.121.253	**65238A**	720 414 32	P/A
TRANSPORTER T4 (90-) 2.5 i	G	AAF	M/A	-		09/90 ➧ 12/93	701.121.253 +	**65184**	720 302 33	P/C
TRANSPORTER T4 (90-) 2.5 i	G	AAF	M/A	+/-		09/90 ➧ 12/93	701.121.253 D+	**65242A**	718 359 32	P/A
TRANSPORTER T4 (90-) 2.5 TDi	D	ACV	M	+/-		09/95 ➧ 06/03	701.121.253 K+	**65242A**	718 359 32	P/A
TRANSPORTER T4 (90-) 2.5 TDi	D	ACV	M	+/-		09/96 ➧ 06/03	7D0.121.253	**65238A**	720 414 32	P/A
TRANSPORTER T4 (90-) 2.5 TDi	D	ACV	A	+/-		05/98 ➧ 06/03	701.121.253 D+	**65242A**	718 359 32	P/A
TRANSPORTER T4 (90-) 2.5 TDi	D	AJT	M	+/-		05/98 ➧ 06/03	7D0.121.253	**65238A**	720 414 32	P/A
TRANSPORTER T4 (90-) 2.5 TDi	D	AJT	M	+/-		05/98 ➧ 06/03	701.121.253 K+	**65242A**	718 359 32	P/A
TRANSPORTER T4 (90-) 2.5 TDi	D	AUF	A	+/-		11/99 ➧ 06/03	701.121.253 K+	**65242A**	718 359 32	P/A
TRANSPORTER T4 (90-) 2.5 TDi	D	AUF	A	+/-		11/99 ➧ 06/03	7D0.121.253	**65238A**	720 414 32	P/A
TRANSPORTER T4 (90-) 2.5 TDi	D	AYC	M/A	+/-		04/01 ➧ 06/03	701.121.253 M	**65273**	721 378 34	P/A
TRANSPORTER T4 (90-) 2.5 TDi	D	AYC	M/A	+/-		04/01 ➧ 06/03	7D0.121.253	**65238A**	720 414 32	P/A
TRANSPORTER T4 (90-) 2.5 TDi	D	AYY	M	+/-		10/01 ➧ 06/03	701.121.253 M	**65273**	721 378 34	P/A
TRANSPORTER T4 (90-) 2.5 TDi	D	AYY	M	+/-		10/01 ➧ 06/03	7D0.121.253	**65238A**	720 414 32	P/A
TRANSPORTER T4 (90-) 2.8 i V6	G	AMV	A	+/-		05/00 ➧ 06/03	7D0.121.253	**65238A**	720 414 32	P/A
TRANSPORTER T4 (90-) 2.8 i V6	G	AMV	A	+/-		05/00 ➧ 06/03	701.121.253 D+	**65242A**	718 359 32	P/A
TRANSPORTER T4 (90-) 2.8 i VR6	G	AES	M/A	+/-		01/96 ➧ 05/00	7D0.121.253	**65238A**	720 414 32	P/A
TRANSPORTER T5 (03-) 1.9 TDi	D	AXB	M	+/-		04/03 ➧	7H0.121.253 F	**65282A**	710 463 24	P/A
TRANSPORTER T5 (03-) 1.9 TDi	D	AXC	M	+/-		04/03 ➧	7H0.121.253 F	**65282A**	710 463 24	P/A
TRANSPORTER T5 (03-) 1.9 TDi	D	BRR	M	+/-		04/03 ➧	7H0.121.253 F	**65282A**	710 463 24	P/A
TRANSPORTER T5 (03-) 1.9 TDi	D	BRS	M	+/-		04/03 ➧	7H0.121.253 F	**65282A**	710 463 24	P/A

RADIATORS

	G/D			AC	Note		OE	Nissens	Dim. H	W	T	Mat.
VOLKSWAGEN LIGHT VAN (../..)												
TRANSPORTER T5 (03-) 2.0 i	G	AXA	M	+/-		11/03 ➧	7H0.121.253 F	**65282A**	710	463	24	P/A
TRANSPORTER T5 (03-) 2.5 TDi	D	AXD	M	+/-		04/03 ➧	7H0.121.253 G+	**65283A**	710	463	32	P/A
TRANSPORTER T5 (03-) 2.5 TDi	D	AXD	A	+/-		04/03 ➧	7H0.121.253 G+	**65283A**	710	463	32	P/A
TRANSPORTER T5 (03-) 2.5 TDi	D	AXE	M	+/-		04/03 ➧	7H0.121.253 G+	**65283A**	710	463	32	P/A
TRANSPORTER T5 (03-) 2.5 TDi	D	AXE	A	+/-		04/03 ➧	7H0.121.253 G+	**65283A**	710	463	32	P/A
TRANSPORTER T5 (03-) 2.5 TDi	D	BLJ	M	+/-		11/03 ➧	7H0.121.253 G+	**65283A**	710	463	32	P/A
TRANSPORTER T5 (03-) 2.5 TDi	D	BNZ	M	+/-		04/03 ➧	7H0.121.253 G+	**65283A**	710	463	32	P/A
TRANSPORTER T5 (03-) 2.5 TDi	D	BPC	M	+/-		04/03 ➧	7H0.121.253 G+	**65283A**	710	463	32	P/A
TRANSPORTER T5 (03-) 3.2 i V6	G	BDL	M	+/-		11/03 ➧	7H0.121.253 H	**65284A**	710	463	24	P/A
TRANSPORTER T5 (03-) 3.2 i V6	G	BDL	A	+/-		11/03 ➧	7H0.121.253 H	**65284A**	710	463	24	P/A
TRANSPORTER T5 (03-) 3.2 i V6	G	BKK	M	+/-		11/03 ➧	7H0.121.253 H	**65284A**	710	463	24	P/A
TRANSPORTER T5 (03-) 3.2 i V6	G	BKK	A	+/-		11/03 ➧	7H0.121.253 H+	**65284A**	710	463	24	P/A

OIL COOLERS

	G/D			AC	Note		OE	Nissens	Dim. H	W	T	Mat.
CITROEN LIGHT VAN												
JUMPER (94-) 2.5 TD	D	DJ5T	M	-		02/94 ➧ 01/02	1103.E8	**90604**	0	0	0	A/A
JUMPER (94-) 2.5 TD	D	DJ5T	M	+		02/94 ➧ 01/02	1103.E8	**90604**	0	0	0	A/A
JUMPER (02-) 2.0 HDi	D	DW10JTD	M	-		01/02 ➧	1103.H4	**90603**	395	68	50	A/A
JUMPER (02-) 2.0 HDi	D	DW10JTD	M	+		01/02 ➧	1103.H4	**90603**	395	68	50	A/A
RELAY (02-) 2.0 HDi	D	DW10JTD	M	-		01/02 ➧	1103.H4	**90603**	395	68	50	A/A
RELAY (02-) 2.0 HDi	D	DW10JTD	M	+		01/02 ➧	1103.H4	**90603**	395	68	50	A/A
RELAY (94-) 2.5 TD	D	DJ5T	M	-		02/94 ➧ 01/02	1103.E8	**90604**	0	0	0	A/A
RELAY (94-) 2.5 TD	D	DJ5T	M	+		02/94 ➧ 01/02	1103.E8	**90604**	0	0	0	A/A
FIAT LIGHT VAN												
DUCATO (94-) 2.5 TD	D	8140.47	M	-		02/94 ➧ 01/02	1103.E8	**90604**	0	0	0	A/A
DUCATO (94-) 2.5 TD	D	8140.47	M	+		02/94 ➧ 01/02	1103.E8	**90604**	0	0	0	A/A
DUCATO (02-) 2.0 JTD	D	DW10TD	M	-		01/02 ➧		**90603**	395	68	50	A/A
DUCATO (02-) 2.0 JTD	D	DW10TD	M	+		01/02 ➧		**90603**	395	68	50	A/A
HYUNDAI LIGHT VAN												
H-100 PORTER (93-) 2.5 D	D	D4BA	M	-		07/93 ➧	26400-43154+	**90610**	505	80	50	A/A
H-100 PORTER (93-) 2.5 TD	D	D4BX	M	-		07/93 ➧	26400-43154+	**90610**	505	80	50	A/A
MERCEDES LIGHT VAN												
209 D (76-) 3.0 DIESEL	D	OM617913	M	-		01/83 ➧ 12/85	002 188 25 01+	**90521**	440	80	45	A/A
209 D (76-) 3.0 DIESEL	D	OM617913	M	-		01/83 ➧ 12/85	617 180 00 65	**90519**	440	80	42	A/A
209 D (76-) 3.0 DIESEL	D	OM617913	M	-		01/86 ➧ 12/88	002 188 25 01+	**90521**	440	80	45	A/A
209 D (76-) 3.0 DIESEL	D	OM617913	M	-	HD	01/86 ➧ 12/88	002 188 25 01+	**90521**	440	80	45	A/A
209 D (76-) 3.0 DIESEL	D	OM617913	A	-		01/86 ➧ 12/88	002 188 25 01+	**90521**	440	80	45	A/A
309 D (68-) 3.0 DIESEL	D	OM 617	M	-	HD	01/86 ➧ 12/88	002 188 25 01+	**90521**	440	80	45	A/A
309 D (68-) 3.0 DIESEL	D	OM 617	M	-	HD	01/86 ➧ 12/88	617 180 00 65	**90519**	440	80	42	A/A
309 D (68-) 3.0 DIESEL	D	OM 617	M	-		01/86 ➧ 12/88	002 188 25 01+	**90521**	440	80	45	A/A
309 D (68-) 3.0 DIESEL	D	OM 617	M	-		08/82 ➧ 12/85	002 188 25 01+	**90521**	440	80	45	A/A
309 D (68-) 3.0 DIESEL	D	OM 617	A	-		01/86 ➧ 12/88	002 188 25 01+	**90521**	440	80	45	A/A
407 D (81-) 3.0 DIESEL	D	OM 617	M	-		06/81 ➧ 12/85		**90519**	440	80	42	A/A
409 D (77-) 3.0 DIESEL	D	OM 617	M	-		01/86 ➧ 09/89	002 188 25 01+	**90521**	440	80	45	A/A
409 D (77-) 3.0 DIESEL	D	OM 617	M	-		01/86 ➧ 09/89	617 180 00 65	**90519**	440	80	42	A/A
409 D (77-) 3.0 DIESEL	D	OM 617	M	-	HD	01/86 ➧ 09/89	002 188 25 01+	**90521**	440	80	45	A/A
409 D (77-) 3.0 DIESEL	D	OM 617	M	-		06/81 ➧ 12/85	002 188 25 01+	**90521**	440	80	45	A/A
409 D (77-) 3.0 DIESEL	D	OM 617	A	-		01/86 ➧ 09/89	002 188 25 01+	**90521**	440	80	45	A/A
VITO W 638 (96-) 108 CDI	D	OM611.940	M	-		03/99 ➧	611 188 03 01+	**90622**	141	80	36	A/A
VITO W 638 (96-) 108 CDI	D	OM611.940	M	-		03/99 ➧	611 188 03 01+	**90622**	141	80	36	A/A
VITO W 638 (96-) 108 CDI	D	OM611.940	M	+		03/99 ➧	611 188 03 01+	**90622**	141	80	36	A/A
VITO W 638 (96-) 108 CDI	D	OM611.940	A	+		03/99 ➧	611 188 03 01+	**90622**	141	80	36	A/A
VITO W 638 (96-) 108 D	D	OM601.942	M/A	-		02/96 ➧ 03/99	601 180 00 65	**90618**	164	97	40	A/A
VITO W 638 (96-) 108 D	D	OM601.942	M/A	+		02/96 ➧ 03/99	601 180 00 65	**90618**	164	97	40	A/A
VITO W 638 (96-) 108 D	D	OM601.942	M	-		02/96 ➧ 03/99	601 180 00 65	**90618**	164	97	40	A/A
VITO W 638 (96-) 110 CDI	D	OM611.980	M	-		03/99 ➧	611 188 03 01+	**90622**	141	80	36	A/A
VITO W 638 (96-) 110 CDI	D	OM611.980	M	-		03/99 ➧	611 188 03 01+	**90622**	141	80	36	A/A
VITO W 638 (96-) 110 CDI	D	OM611.980	M	+		03/99 ➧	611 188 03 01+	**90622**	141	80	36	A/A
VITO W 638 (96-) 110 CDI	D	OM611.980	A	+		03/99 ➧	611 188 03 01+	**90622**	141	80	36	A/A
VITO W 638 (96-) 110 TD	D	OM601.970	M/A	-		02/96 ➧ 03/99	601 180 00 65	**90618**	164	97	40	A/A
VITO W 638 (96-) 110 TD	D	OM601.970	M/A	+		02/96 ➧ 03/99	601 180 00 65	**90618**	164	97	40	A/A

OIL COOLERS

	G/D			AC	Note		OE	Nissens	Dim. H	Dim. W	Dim. T	Mat.
MERCEDES LIGHT VAN (../..)												
VITO W 638 (96-) 110 TD	D	OM601.970	M	-		02/96 ➧ 03/99	601 180 00 65	**90618**	164	97	40	A/A
VITO W 638 (96-) 112 CDI	D	OM611.960	M	-		03/99 ➧	611 188 03 01+	**90622**	141	80	36	A/A
VITO W 638 (96-) 112 CDI	D	OM611.960	M	-		03/99 ➧	611 188 03 01+	**90622**	141	80	36	A/A
VITO W 638 (96-) 112 CDI	D	OM611.960	M	+		03/99 ➧	611 188 03 01+	**90622**	141	80	36	A/A
VITO W 638 (96-) 112 CDI	D	OM611.960	A	+		03/99 ➧	611 188 03 01+	**90622**	141	80	36	A/A
VITO W 638 (96-) 113	G	M111.948	M/A	-		02/96 ➧ 03/99	111 180 00 65	**90583**	443	343	0	A/A
VITO W 638 (96-) 113	G	M111.948	M/A	+		02/96 ➧ 03/99	111 180 00 65	**90583**	443	343	0	A/A
VITO W 638 (96-) 113	G	M111.948	M	-		02/96 ➧ 03/99	111 180 00 65	**90583**	443	343	0	A/A
VITO W 638 (96-) 113	G	M111.948	M	-		03/99 ➧ 07/03	111 180 00 65	**90583**	443	343	0	A/A
VITO W 638 (96-) 113	G	M111.948	M	+		03/99 ➧ 07/03	111 180 00 65	**90583**	443	343	0	A/A
VITO W 638 (96-) 113	G	M111.948	A	+/-		03/99 ➧ 07/03	111 180 00 65	**90583**	443	343	0	A/A
VITO W 638 (96-) 114	G	M111.978	M/A	-		02/96 ➧ 03/99	111 180 00 65	**90583**	443	343	0	A/A
VITO W 638 (96-) 114	G	M111.978	M/A	+		02/96 ➧ 03/99	111 180 00 65	**90583**	443	343	0	A/A
VITO W 638 (96-) 114	G	M111.978	M	-		02/96 ➧ 03/99	111 180 00 65	**90583**	443	343	0	A/A
VITO W 638 (96-) 114	G	M111.978	M	-		03/99 ➧ 07/03	111 180 00 65	**90583**	443	343	0	A/A
VITO W 638 (96-) 114	G	M111.978	M	+		03/99 ➧ 07/03	111 180 00 65	**90583**	443	343	0	A/A
VITO W 638 (96-) 114	G	M111.978	A	+/-		03/99 ➧ 07/03	111 180 00 65	**90583**	443	343	0	A/A
PEUGEOT LIGHT VAN												
BOXER (94-) 2.5 TD	D	DJ5T	M	-		02/94 ➧ 01/02	1103.E8	**90604**	0	0	0	A/A
BOXER (94-) 2.5 TD	D	DJ5T	M	+		02/94 ➧ 01/02	1103.E8	**90604**	0	0	0	A/A
BOXER (02-) 2.0 HDi	D	DW10TD	M	-		01/02 ➧	1103.H4	**90603**	395	68	50	A/A
BOXER (02-) 2.0 HDi	D	DW10TD	M	+		01/02 ➧	1103.H4	**90603**	395	68	50	A/A
RENAULT LIGHT VAN												
TRAFIC (89-) 2.1 D	D	852	M	-		03/89 ➧ 06/94	77 00 745 281	**90535**	150	190	42	A/A
TRAFIC (89-) 2.1 D	D	J8S	M	-		06/94 ➧	77 00 745 281	**90535**	150	190	42	A/A
TRAFIC (89-) 2.5 TD	D	S8U	M	-		03/89 ➧	77 00 745 281	**90535**	150	190	42	A/A
TRAFIC (97-) 1.9 D	D	F8Q	M	-		09/97 ➧ 03/01	77 00 745 281	**90535**	150	190	42	A/A
TRAFIC (97-) 1.9 dTi	D	F8Q	M	+/-		09/97 ➧ 03/01	77 00 745 281	**90535**	150	190	42	A/A
TRAFIC (97-) 2.5 dTi	D	S8U	M	+/-		09/97 ➧ 03/01	77 00 745 281	**90535**	150	190	42	A/A
SEAT LIGHT VAN												
INCA (95-) 1.9 D	D	1Y	M	-		11/95 ➧ 06/03	068.117.021 B	**90607**	90	90	54	A/A
INCA (95-) 1.9 D	D	1Y	M	+		11/95 ➧ 06/03	068.117.021 B	**90607**	90	90	54	A/A
INCA (95-) 1.9 Sdi	D	AEY	M	-		11/95 ➧ 09/00	068.117.021 B	**90607**	90	90	54	A/A
INCA (95-) 1.9 Sdi	D	AEY	M	+		11/95 ➧ 09/00	068.117.021 B	**90607**	90	90	54	A/A
INCA (95-) 1.9 Sdi	D	AYQ	M	+/-		09/00 ➧ 06/03	068.117.021 B	**90607**	90	90	54	A/A
INCA (95-) 1.9 Sdi	D	AYQ	M	+/-		09/00 ➧ 06/03	068.117.021 B	**90607**	90	90	54	A/A
VOLKSWAGEN LIGHT VAN												
CADDY (82-) 1.8	G	JH	M	-		08/85 ➧ 07/92	068.117.021 B	**90607**	90	90	54	A/A
CADDY (82-) 1.8	G	JH	A	-		08/85 ➧ 07/92	068.117.021 B	**90607**	90	90	54	A/A
CADDY (95-) 1.6 i	G	1F	M	-		11/95 ➧ 05/97	068.117.021 B	**90607**	90	90	54	A/A
CADDY (95-) 1.6 i	G	1F	M	+		11/95 ➧ 05/97	068.117.021 B	**90607**	90	90	54	A/A
CADDY (95-) 1.7 SDi	D	AHB	M	-		07/96 ➧ 09/00	068.117.021 B	**90607**	90	90	54	A/A
CADDY (95-) 1.7 SDi	D	AHB	M	+		07/96 ➧ 09/00	068.117.021 B	**90607**	90	90	54	A/A
CADDY (95-) 1.9 D	D	1Y	M	-		11/95 ➧ 06/03	068.117.021 B	**90607**	90	90	54	A/A
CADDY (95-) 1.9 D	D	1Y	M	+		11/95 ➧ 06/03	068.117.021 B	**90607**	90	90	54	A/A
CADDY (95-) 1.9 Sdi	D	AEY	M	-		11/95 ➧ 09/00	068.117.021 B	**90607**	90	90	54	A/A

OIL COOLERS

	G/D			AC	Note		OE	Nissens	Dim. H	W	T	Mat.
VOLKSWAGEN LIGHT VAN (../..)												
CADDY (95-) 1.9 Sdi	D	AEY	M	+		11/95 ➧ 09/00	068.117.021 B	**90607**	90	90	54	A/A
CADDY (95-) 1.9 Sdi	D	AYQ	M	+/-		09/00 ➧ 06/03	068.117.021 B	**90607**	90	90	54	A/A
CADDY (95-) 1.9 Sdi	D	AYQ	M	+/-		09/00 ➧ 06/03	068.117.021 B	**90607**	90	90	54	A/A
CADDY (95-) 1.9 TDi	D	1Z	M	-		10/96 ➧ 03/97	068.117.021 B	**90607**	90	90	54	A/A
CADDY (95-) 1.9 TDi	D	1Z	M	+		10/96 ➧ 03/97	068.117.021 B	**90607**	90	90	54	A/A
CADDY (95-) 1.9 TDi	D	AHU	M	-	90 HP	10/96 ➧ 09/00	068.117.021 B	**90607**	90	90	54	A/A
CADDY (95-) 1.9 TDi	D	AHU	M	+		10/96 ➧ 09/00	068.117.021 B	**90607**	90	90	54	A/A
CADDY (95-) 1.9 TDi	D	ALE	M	-		09/97 ➧ 09/00	068.117.021 B	**90607**	90	90	54	A/A
CADDY (95-) 1.9 TDi	D	ALE	M	+		09/97 ➧ 09/00	068.117.021 B	**90607**	90	90	54	A/A
CADDY (95-) 1.9 TDi	D	ALH	M	-		09/00 ➧ 06/03	068.117.021 B	**90607**	90	90	54	A/A
CADDY (04-) 1.6 i	G	BGU	M	+/-		04/04 ➧	078.117.021 A	**90606**	90	90	54	A/A
CADDY (04-) 1.9 TDi	D	BJB	M	+/-	105 HP	02/04 ➧	028.117.021 B+	**90608**	90	90	54	A/A
CADDY (04-) 1.9 TDi	D	BLS	M	+/-	105 HP	02/04 ➧	028.117.021 B+	**90608**	90	90	54	A/A
CADDY (04-) 1.9 TDi	D	BSU	M	+/-		02/04 ➧	028.117.021 B+	**90608**	90	90	54	A/A
CADDY (04-) 2.0 GAS	G	BSX	M	+/-		02/04 ➧	028.117.021 B+	**90608**	90	90	54	A/A
CADDY (04-) 2.0 SDI	D	BDJ	M	+/-		02/04 ➧	028.117.021 B+	**90608**	90	90	54	A/A
CADDY (04-) 2.0 SDI	D	BST	M	+/-		02/04 ➧	028.117.021 B+	**90608**	90	90	54	A/A
LT (82-) 2.4 TD	D	1G	M	-		08/88 ➧ 08/92	068.117.021 B	**90607**	90	90	54	A/A
LT (82-) 2.4 TD	D	DV	M	-		12/82 ➧ 08/92	068.117.021 B	**90607**	90	90	54	A/A
LT (03-) 2.5 TDi	D	ANJ	M	-		06/03 ➧	068.117.021 B	**90607**	90	90	54	A/A
LT (03-) 2.5 TDi	D	ANJ	M	+		06/03 ➧	068.117.021 B	**90607**	90	90	54	A/A
LT (03-) 2.5 TDi	D	AVR	M	-		06/03 ➧	068.117.021 B	**90607**	90	90	54	A/A
LT (03-) 2.5 TDi	D	AVR	M	+		06/03 ➧	068.117.021 B	**90607**	90	90	54	A/A
LT (03-) 2.5 TDi	D	BBE	M	-		01/04 ➧	068.117.021 B	**90607**	90	90	54	A/A
LT (03-) 2.5 TDi	D	BBE	M	+		01/04 ➧	068.117.021 B	**90607**	90	90	54	A/A
LT (03-) 2.5 TDi	D	BBF	M	-		01/04 ➧	068.117.021 B	**90607**	90	90	54	A/A
LT (03-) 2.5 TDi	D	BBF	M	+		01/04 ➧	068.117.021 B	**90607**	90	90	54	A/A
TOUAREG (02-) 2.5 TDi	D	AHY	M/A	+/-		07/03 ➧	7L0.317.021	**90617**	655	160	16	A/A
TOUAREG (02-) 2.5 TDi	D	BAC	M/A	+/-		01/03 ➧	7L0.317.021	**90617**	655	160	16	A/A
TOUAREG (02-) 2.5 TDi	D	BLK	M/A	+/-		07/03 ➧	7L0.317.021	**90617**	655	160	16	A/A
TOUAREG (02-) 2.5 TDi	D	BPD	M/A	+/-		07/03 ➧	7L0.317.021	**90617**	655	160	16	A/A
TOUAREG (02-) 2.5 TDi	D	BPE	M/A	+/-		07/03 ➧	7L0.317.021	**90617**	655	160	16	A/A
TOUAREG (02-) 3.0 TDi	G	BKS	M/A	+/-		11/04 ➧	7L0.317.021	**90617**	655	160	16	A/A
TOUAREG (02-) 3.2 i V6	G	AZZ	M/A	+/-		11/02 ➧ 05/04	7L6.422.855 A+	**90636**	560	72	16	A/A
TOUAREG (02-) 3.2 i V6	G	BKJ	M/A	+/-		05/03 ➧ 05/04	7L6.422.855 A+	**90636**	560	72	16	A/A
TOUAREG (02-) 3.2 i V6	G	BMV	M/A	+/-		05/04 ➧	7L6.422.855 A+	**90636**	560	72	16	A/A
TOUAREG (02-) 3.2 i V6	G	BMX	M/A	+/-		05/04 ➧	7L6.422.855 A+	**90636**	560	72	16	A/A
TOUAREG (02-) 3.2 i V6	G	BRJ	M/A	+/-		05/04 ➧	7L6.422.855 A+	**90636**	560	72	16	A/A
TOUAREG (02-) 3.2 i V6	G	BAA	A	+/-		08/03 ➧ 05/04	7L6.422.855 A+	**90636**	560	72	16	A/A
TOUAREG (02-) 3.6 FSI	G	BHK	M/A	+/-		05/04 ➧	7L0.317.021	**90617**	655	160	16	A/A
TOUAREG (02-) 3.6 FSI	G	BHL	M/A	+/-		05/04 ➧	7L0.317.021	**90617**	655	160	16	A/A
TOUAREG (02-) 4.2 i V8 40V	G	AXQ	A	+/-		12/02 ➧	7L0.317.021	**90617**	655	160	16	A/A
TOUAREG (02-) 5.0 TDi	D	AYH	A	+/-		11/02 ➧	7L6.422.855 B+	**90633**	560	72	16	A/A
TOUAREG (02-) 5.0 TDi	D	BLE	A	+/-		11/04 ➧	7L6.422.855 B+	**90633**	560	72	16	A/A
TOUAREG (02-) 5.0 TDi	D	BWF	A	+/-		11/04 ➧	7L6.422.855 B+	**90633**	560	72	16	A/A
TOUAREG (02-) 6.0 WR12	G	BJN	A	+/-		08/04 ➧	7L6.422.855 B+	**90633**	560	72	16	A/A
TOURAN (03-) 1.6 i 16V	G	BGU	M	+/-		02/03 ➧	078.117.021 A	**90606**	90	90	54	A/A
TOURAN (03-) 1.6 i 16V	G	BGU	A	+/-		02/03 ➧	078.117.021 A	**90606**	90	90	54	A/A
TOURAN (03-) 1.6 i 16V	G	BLF	M	+/-		02/03 ➧	078.117.021 A	**90606**	90	90	54	A/A
TOURAN (03-) 1.6 i 16V	G	BLF	A	+/-		02/03 ➧	078.117.021 A	**90606**	90	90	54	A/A

OIL COOLERS

	G/D			AC	Note		OE	Nissens	Dim. H	Dim. W	Dim. T	Mat.
VOLKSWAGEN LIGHT VAN (../..)												
TOURAN (03-) 1.6 i 16V	G	BSE	M	+/-		02/03 ➧	078.117.021 A	**90606**	90	90	54	A/A
TOURAN (03-) 1.6 i 16V	G	BSF	M	+/-		02/03 ➧	078.117.021 A	**90606**	90	90	54	A/A
TOURAN (03-) 1.9 TDi	D	AVQ	M	+	HD	02/03 ➧	028.117.021 B+	**90608**	90	90	54	A/A
TOURAN (03-) 1.9 TDi	D	AVQ	M	+/-		02/03 ➧	028.117.021 B+	**90608**	90	90	54	A/A
TOURAN (03-) 1.9 TDi	D	BKC	M/A	-		02/03 ➧	028.117.021 B+	**90608**	90	90	54	A/A
TOURAN (03-) 1.9 TDi	D	BKC	M/A	+		02/03 ➧	028.117.021 B+	**90608**	90	90	54	A/A
TOURAN (03-) 1.9 TDi	D	BRU	M/A	-		02/03 ➧	028.117.021 B+	**90608**	90	90	54	A/A
TOURAN (03-) 1.9 TDi	D	BRU	M/A	+		02/03 ➧	028.117.021 B+	**90608**	90	90	54	A/A
TRANSPORTER T4 (90-) 1.8 i	G	PD	M	-		09/90 ➧ 07/92	068.117.021 B	**90607**	90	90	54	A/A
TRANSPORTER T4 (90-) 1.8 i	G	PD	M	-		09/90 ➧ 07/92	068.117.021 B	**90607**	90	90	54	A/A
TRANSPORTER T4 (90-) 1.9 D	D	1X	M	-		09/90 ➧ 07/94	068.117.021 B	**90607**	90	90	54	A/A
TRANSPORTER T4 (90-) 1.9 D	D	1X	M	-		09/90 ➧ 12/95	068.117.021 B	**90607**	90	90	54	A/A
TRANSPORTER T4 (90-) 1.9 TD	D	ABL	M	+/-		09/96 ➧ 06/03	068.117.021 B	**90607**	90	90	54	A/A
TRANSPORTER T4 (90-) 1.9 TD	D	ABL	M	+/-		10/92 ➧ 06/03	068.117.021 B	**90607**	90	90	54	A/A
TRANSPORTER T4 (90-) 2.0 i	G	AAC	M/A	+/-		09/90 ➧ 06/03	068.117.021 B	**90607**	90	90	54	A/A
TRANSPORTER T4 (90-) 2.0 i	G	AAC	M/A	+/-		09/96 ➧ 06/03	068.117.021 B	**90607**	90	90	54	A/A
TRANSPORTER T4 (90-) 2.0 i	G	AAC	M	+/-		09/90 ➧ 07/94	068.117.021 B	**90607**	90	90	54	A/A
TRANSPORTER T4 (90-) 2.4 D	D	AAB	M	-		09/90 ➧ 07/94	068.117.021 B	**90607**	90	90	54	A/A
TRANSPORTER T4 (90-) 2.4 D	D	AAB	M	+/-		09/90 ➧ 04/98	068.117.021 B	**90607**	90	90	54	A/A
TRANSPORTER T4 (90-) 2.4 D	D	AAB	M	+/-		09/96 ➧ 04/98	068.117.021 B	**90607**	90	90	54	A/A
TRANSPORTER T4 (90-) 2.5 i	G	ACU	M/A	-		02/94 ➧ 07/94	068.117.021 B	**90607**	90	90	54	A/A
TRANSPORTER T4 (90-) 2.5 i	G	ACU	M/A	+/-		02/94 ➧ 10/96	068.117.021 B	**90607**	90	90	54	A/A
TRANSPORTER T4 (90-) 2.5 i	G	AEN	M/A	+/-		05/95 ➧ 12/95	068.117.021 B	**90607**	90	90	54	A/A
TRANSPORTER T4 (90-) 2.5 i	G	AET	M/A	+/-		08/96 ➧ 06/03	068.117.021 B	**90607**	90	90	54	A/A
TRANSPORTER T4 (90-) 2.5 i	G	AET	M/A	+/-		08/96 ➧ 06/03	068.117.021 B	**90607**	90	90	54	A/A
TRANSPORTER T4 (90-) 2.5 i	G	AEU	M/A	+/-		08/96 ➧ 06/03	068.117.021 B	**90607**	90	90	54	A/A
TRANSPORTER T4 (90-) 2.5 i	G	AEU	M/A	+/-		08/96 ➧ 06/03	068.117.021 B	**90607**	90	90	54	A/A
TRANSPORTER T4 (90-) 2.5 i	G	AAF	M/A	-		09/90 ➧ 12/93	068.117.021 B	**90607**	90	90	54	A/A
TRANSPORTER T4 (90-) 2.5 i	G	AAF	M/A	+/-		09/90 ➧ 12/93	068.117.021 B	**90607**	90	90	54	A/A
TRANSPORTER T4 (90-) 2.8 i V6	G	AMV	A	+/-		05/00 ➧ 06/03	068.117.021 B	**90607**	90	90	54	A/A
TRANSPORTER T4 (90-) 2.8 i V6	G	AMV	A	+/-		05/00 ➧ 06/03	068.117.021 B	**90607**	90	90	54	A/A
TRANSPORTER T4 (90-) 2.8 i VR6	G	AES	M/A	+/-		01/96 ➧ 05/00	068.117.021 B	**90607**	90	90	54	A/A
TRANSPORTER T5 (03-) 1.9 TDi	D	AXB	M	+/-		04/03 ➧	028.117.021 B+	**90608**	90	90	54	A/A
TRANSPORTER T5 (03-) 1.9 TDi	D	AXC	M	+/-		04/03 ➧	028.117.021 B+	**90608**	90	90	54	A/A
TRANSPORTER T5 (03-) 1.9 TDi	D	BRR	M	+/-		04/03 ➧	028.117.021 B+	**90608**	90	90	54	A/A
TRANSPORTER T5 (03-) 1.9 TDi	D	BRS	M	+/-		04/03 ➧	028.117.021 B+	**90608**	90	90	54	A/A
TRANSPORTER T5 (03-) 2.0 i	G	AXA	M	+/-		11/03 ➧	028.117.021 B+	**90608**	90	90	54	A/A
TRANSPORTER T5 (03-) 2.5 TDi	D	AXD	M	+/-		04/03 ➧	028.117.021 B+	**90608**	90	90	54	A/A
TRANSPORTER T5 (03-) 2.5 TDi	D	AXD	A	+/-		04/03 ➧	028.117.021 B+	**90608**	90	90	54	A/A
TRANSPORTER T5 (03-) 2.5 TDi	D	AXE	M	+/-		04/03 ➧	028.117.021 B+	**90608**	90	90	54	A/A
TRANSPORTER T5 (03-) 2.5 TDi	D	AXE	A	+/-		04/03 ➧	028.117.021 B+	**90608**	90	90	54	A/A
TRANSPORTER T5 (03-) 2.5 TDi	D	BLJ	M	+/-		11/03 ➧	028.117.021 B+	**90608**	90	90	54	A/A
TRANSPORTER T5 (03-) 2.5 TDi	D	BNZ	M	+/-		04/03 ➧	028.117.021 B+	**90608**	90	90	54	A/A
TRANSPORTER T5 (03-) 2.5 TDi	D	BPC	M	+/-		04/03 ➧	028.117.021 B+	**90608**	90	90	54	A/A
TRANSPORTER T5 (03-) 3.2 i V6	G	BDL	A	+/-		11/03 ➧	7H0.317.019	**90635**	655	160	16	A/A
TRANSPORTER T5 (03-) 3.2 i V6	G	BKK	A	+/-		11/03 ➧	7H0.317.019+	**90635**	655	160	16	A/A

INTERCOOLERS

	G/D			AC	Note		OE	Nissens	Dim. H W T	Mat.
CITROEN LIGHT VAN										
BERLINGO (02-) 2.0 HDi	D	DW10TD	M	+/-		12/02 ➧	0384.F6 +	**96790**	300 127 64	P/A
DISPATCH (95-) 1.9 TD	D	XUDTE	M	+/-		10/95 ➧	0384.E7	**96849**	680 320 32	P/A
DISPATCH (95-) 2.0 HDi	D	DW10ATED	M	+/-		02/00 ➧	0384.E7	**96849**	680 320 32	P/A
DISPATCH (95-) 2.1 TD	D	XUD11ATE	M	+/-		10/95 ➧	0384.E7	**96849**	680 320 32	P/A
JUMPER (94-) 1.9 TD	D	XUD9UTF	M	+/-		02/94 ➧ 01/02	0384.E4	**96889**	295 205 62	P/A
JUMPER (94-) 2.5 TD	D	DJ5T	M	-		02/94 ➧ 01/02	0384.E4	**96889**	295 205 62	P/A
JUMPER (94-) 2.5 TD	D	DJ5T	M	+		02/94 ➧ 01/02	0384.E4	**96889**	295 205 62	P/A
JUMPER (94-) 2.8 HDi	D	8140-43/63	M	+/-		02/94 ➧ 01/02	0384.E4	**96889**	295 205 62	P/A
JUMPER (94-) 2.8 TD	D	8140-43/63	M	+/-		02/94 ➧ 01/02	0384.E4	**96889**	295 205 62	P/A
JUMPER (02-) 2.0 HDi	D	DW10JTD	M	-		01/02 ➧	0384.E4	**96889**	295 205 62	P/A
JUMPER (02-) 2.0 HDi	D	DW10JTD	M	+		01/02 ➧	0384.E4	**96889**	295 205 62	P/A
JUMPER (02-) 2.2 HDi	D	DW12TED4	M	-		01/02 ➧	0384.E4	**96889**	295 205 62	P/A
JUMPER (02-) 2.2 HDi	D	DW12TED4	M	+		01/02 ➧	0384.E4	**96889**	295 205 62	P/A
JUMPER (02-) 2.8 HDi	D	F28TDCR	M	-		01/02 ➧	0384.E4	**96889**	295 205 62	P/A
JUMPER (02-) 2.8 HDi	D	F28TDCR	M	+		01/02 ➧	0384.E4	**96889**	295 205 62	P/A
JUMPY (95-) 1.9 TD	D	XUDTE	M	+/-		10/95 ➧	0384.E7	**96849**	680 320 32	P/A
JUMPY (95-) 2.0 HDi	D	DW10ATED	M	+/-		02/00 ➧	0384.E7	**96849**	680 320 32	P/A
JUMPY (95-) 2.1 TD	D	XUD11ATE	M	+/-		10/95 ➧	0384.E7	**96849**	680 320 32	P/A
RELAY (02-) 2.0 HDi	D	DW10JTD	M	-		01/02 ➧	0384.E4	**96889**	295 205 62	P/A
RELAY (02-) 2.0 HDi	D	DW10JTD	M	+		01/02 ➧	0384.E4	**96889**	295 205 62	P/A
RELAY (02-) 2.2 HDi	D	DW12TED4	M	-		01/02 ➧	0384.E4	**96889**	295 205 62	P/A
RELAY (02-) 2.2 HDi	D	DW12TED4	M	+		01/02 ➧	0384.E4	**96889**	295 205 62	P/A
RELAY (02-) 2.8 HDi	D	F28TDCR	M	-		01/02 ➧	0384.E4	**96889**	295 205 62	P/A
RELAY (02-) 2.8 HDi	D	F28TDCR	M	+		01/02 ➧	0384.E4	**96889**	295 205 62	P/A
RELAY (94-) 1.9 TD	D	XUD9UTF	M	+/-		02/94 ➧ 01/02	0384.E4	**96889**	295 205 62	P/A
RELAY (94-) 2.5 TD	D	DJ5T	M	-		02/94 ➧ 01/02	0384.E4	**96889**	295 205 62	P/A
RELAY (94-) 2.5 TD	D	DJ5T	M	+		02/94 ➧ 01/02	0384.E4	**96889**	295 205 62	P/A
RELAY (94-) 2.8 HDi	D	8140-43/63	M	+/-		02/94 ➧ 01/02	0384.E4	**96889**	295 205 62	P/A
RELAY (94-) 2.8 TD	D	8140-43/63	M	+/-		02/94 ➧ 01/02	0384.E4	**96889**	295 205 62	P/A
FIAT LIGHT VAN										
DOBLO (01-) 1.3 JTD	D	188 A9.000	M	-		01/03 ➧	46779532 +	**96736**	500 70 85	A/A
DOBLO (01-) 1.3 JTD	D	188 A9.000	M	+		01/03 ➧	46779532 +	**96736**	500 70 85	A/A
DOBLO (01-) 1.9 JTD	D	182 B9.000	M	-		10/01 ➧	46779532 +	**96736**	500 70 85	A/A
DOBLO (01-) 1.9 JTD	D	182 B9.000	M	+		10/01 ➧	46779532 +	**96736**	500 70 85	A/A
DUCATO (94-) 1.9 TD	D	XUD9TF	M	-		02/94 ➧ 01/02	1307012080 +	**96889**	295 205 62	P/A
DUCATO (94-) 1.9 TD	D	XUD9TF	M	+		02/94 ➧ 01/02	1307012080 +	**96889**	295 205 62	P/A
DUCATO (94-) 2.0 JTD	D	DW10TD	M	-		02/94 ➧ 01/02	1307012080 +	**96889**	295 205 62	P/A
DUCATO (94-) 2.0 JTD	D	DW10TD	M	+		02/94 ➧ 01/02	1307012080 +	**96889**	295 205 62	P/A
DUCATO (94-) 2.5 JTD	D	8140.47	M	-		02/94 ➧ 01/02	1307012080 +	**96889**	295 205 62	P/A
DUCATO (94-) 2.5 JTD	D	8140.47	M	+		02/94 ➧ 01/02	1307012080 +	**96889**	295 205 62	P/A
DUCATO (94-) 2.5 TD	D	8140.47	M	-		02/94 ➧ 01/02	1307012080 +	**96889**	295 205 62	P/A
DUCATO (94-) 2.5 TD	D	8140.47	M	+		02/94 ➧ 01/02	1307012080 +	**96889**	295 205 62	P/A
DUCATO (94-) 2.8 JTD	D	8140.43S	M	+/-		02/94 ➧ 11/01	1307012080 +	**96889**	295 205 62	P/A
DUCATO (94-) 2.8 TD	D	8140.43	M	+/-		02/94 ➧ 11/01	1307012080 +	**96889**	295 205 62	P/A
DUCATO (02-) 2.0 JTD	D	DW10TD	M	-		01/02 ➧	0384.E4	**96889**	295 205 62	P/A
DUCATO (02-) 2.0 JTD	D	DW10TD	M	+		01/02 ➧	0384.E4	**96889**	295 205 62	P/A
DUCATO (02-) 2.2 JTD	D	2179 DW12TED	M	-		01/02 ➧	0384.E4	**96889**	295 205 62	P/A
DUCATO (02-) 2.2 JTD	D	2179 DW12TED	M	+		01/02 ➧	0384.E4	**96889**	295 205 62	P/A

INTERCOOLERS

	G/D			AC	Note		OE	Nissens	Dim. H	W	T	Mat.
FIAT LIGHT VAN (../..)												
DUCATO (02-) 2.3 JTD	D	F1AE0481C	M	-		01/02 ➧	0384.E4	**96889**	295	205	62	P/A
DUCATO (02-) 2.3 JTD	D	F1AE0481C	M	+		01/02 ➧	0384.E4	**96889**	295	205	62	P/A
DUCATO (02-) 2.8 JTD	D	8140.43S	M	-		01/02 ➧	0384.E4	**96889**	295	205	62	P/A
DUCATO (02-) 2.8 JTD	D	8140.43S	M	+		01/02 ➧	0384.E4	**96889**	295	205	62	P/A
DUCATO (02-) 2.8 TD	D	8140.43S	M	-		01/02 ➧	0384.E4	**96889**	295	205	62	P/A
SCUDO (96-) 1.9 TD	D	D8B	M	+/-		07/95 ➧	1472059080	**96849**	680	320	32	P/A
SCUDO (96-) 2.0 JTD	D	RHX	M	+/-		02/00 ➧	1472059080	**96849**	680	320	32	P/A
SCUDO (96-) 2.0 JTD	D	RHZ	M	+/-		02/00 ➧	1472059080	**96849**	680	320	32	P/A
FORD LIGHT VAN												
TRANSIT (00-) 2.0 D 75 HP	D		M	+/-		08/00 ➧	1C159L440BE+	**96733**	400	127	76	P/A
TRANSIT (00-) 2.0 D 75 HP	D		M	+/-		08/00 ➧	1C159L440BE+	**96732**	400	127	76	P/A
TRANSIT (00-) 2.0 D 85 HP	D		M	+/-		08/00 ➧	1C159L440BA+	**96733**	400	127	76	P/A
TRANSIT (00-) 2.0 D 100 HP	D		M	+/-		08/00 ➧	1C159L440BA+	**96733**	400	127	76	P/A
TRANSIT (00-) 2.0 TDCI 125 HP	D		M	+/-		08/00 ➧	1C159L440BA+	**96733**	400	127	76	P/A
TRANSIT (00-) 2.4 D 75 HP	D		M	-		01/00 ➧	1C159L440BA+	**96733**	400	127	76	P/A
TRANSIT (00-) 2.4 D 75 HP	D		M	+		01/00 ➧	1C159L440BA+	**96733**	400	127	76	P/A
TRANSIT (00-) 2.4 D 90 HP	D		M	-		01/00 ➧	1C159L440BA+	**96733**	400	127	76	P/A
TRANSIT (00-) 2.4 D 90 HP	D		M	+		01/00 ➧	1C159L440BA+	**96733**	400	127	76	P/A
TRANSIT (00-) 2.4 D 115 HP	D		M	-		01/00 ➧	1C159L440BA+	**96733**	400	127	76	P/A
TRANSIT (00-) 2.4 D 115 HP	D		M	+		07/00 ➧	1C159L440BA+	**96733**	400	127	76	P/A
TRANSIT (00-) 2.4 D 120 HP	D		M	-		01/00 ➧	1C159L440BA+	**96733**	400	127	76	P/A
TRANSIT (00-) 2.4 D 120 HP	D		M	+		07/00 ➧	1C159L440BA+	**96733**	400	127	76	P/A
TRANSIT (00-) 2.4 D 125 HP	D		M	-		01/00 ➧	1C159L440BA+	**96733**	400	127	76	P/A
TRANSIT (00-) 2.4 D 125 HP	D		M	+		07/00 ➧	1C159L440BA+	**96733**	400	127	76	P/A
TRANSIT (00-) 2.4 TDCI 135 HP	D		M	-		03/04 ➧	1C159L440BA+	**96733**	400	127	76	P/A
TRANSIT (00-) 2.4 TDCI 135 HP	D		M	+		03/04 ➧	1C159L440BA+	**96733**	400	127	76	P/A
HYUNDAI LIGHT VAN												
GALLOPER (98-) 2.5 TCI	D	D4BH	M	+/-		08/91 ➧	HR140170	**96659**	0	0	0	A/A
H-100 (04-) 2.5 TDi	D	D4BH	M	+/-		02/04 ➧	28190-42701	**96662**	0	0	0	A/A
H1 (97-) 2.5 TDi	D	D4BH	M	+/-	With IC	10/97 ➧	28190-4A200+	**96669**	0	0	0	A/A
H1 (97-) 2.5 TDi	D	D4BH	A	+/-	With IC	10/97 ➧	28190-4A200+	**96669**	0	0	0	A/A
KIA LIGHT VAN												
K-SERIE (04-) 2.5 TCI	D	D4BH	M	+/-		07/04 ➧	28191-42750	**96666**	0	0	0	A/A
LDV (96-) LIGHT VAN												
CONVOY (98-) 2.5 TDi	D	ET70	M	+/-		10/98 ➧	90353026	**96895**	260	100	64	P/A
MERCEDES LIGHT VAN												
SPRINTER (95-) 208 CDI	D	OM611.987	M	+/-		04/00 ➧	901 501 07 01	**96842**	717	255	35	P/A
SPRINTER (95-) 208 CDI	D	OM611.987	A	+/-		04/00 ➧	901 501 07 01	**96842**	717	255	35	P/A
SPRINTER (95-) 208 D	D	OM 601	M	-		01/95 ➧ 04/00	901 501 07 01	**96842**	717	255	35	P/A
SPRINTER (95-) 208 D	D	OM 601	M	+		01/95 ➧ 04/00	901 501 07 01	**96842**	717	255	35	P/A
SPRINTER (95-) 208 D	D	OM 601	M	+		01/95 ➧ 04/00	901 501 07 01	**96842**	717	255	35	P/A
SPRINTER (95-) 208 D	D	OM 601	A	+		01/95 ➧ 04/00	901 501 07 01	**96842**	717	255	35	P/A
SPRINTER (95-) 210 D	D	OM 601	M	-		02/95 ➧ 04/00	901 501 07 01	**96842**	717	255	35	P/A
SPRINTER (95-) 210 D	D	OM 601	M	+		02/95 ➧ 04/00	901 501 07 01	**96842**	717	255	35	P/A
SPRINTER (95-) 210 D	D	OM 602	M	+		02/95 ➧ 04/00	901 501 07 01	**96842**	717	255	35	P/A

INTERCOOLERS

	G/D			AC	Note		OE	Nissens	Dim. H W T	Mat.
MERCEDES LIGHT VAN (../..)										
SPRINTER (95-) 210 D	D	OM 602	A	+		02/95 ➧ 04/00	901 501 07 01	**96842**	717 255 35	P/A
SPRINTER (95-) 211 CDI	D	OM611.981/987	M	+/-		04/00 ➧	901 501 07 01	**96842**	717 255 35	P/A
SPRINTER (95-) 211 CDI	D	OM611.981/987	A	+/-		04/00 ➧	901 501 07 01	**96842**	717 255 35	P/A
SPRINTER (95-) 212 D	D	OM 601	M	-		02/95 ➧ 04/00	901 501 07 01	**96842**	717 255 35	P/A
SPRINTER (95-) 212 D	D	OM 601	M	+		02/95 ➧ 04/00	901 501 07 01	**96842**	717 255 35	P/A
SPRINTER (95-) 212 D	D	OM 602	M	+		02/95 ➧ 04/00	901 501 07 01	**96842**	717 255 35	P/A
SPRINTER (95-) 212 D	D	OM 602	A	+		02/95 ➧ 04/00	901 501 07 01	**96842**	717 255 35	P/A
SPRINTER (95-) 213 CDI	D	OM611.981/987	M	+/-		04/00 ➧	901 501 07 01	**96842**	717 255 35	P/A
SPRINTER (95-) 213 CDI	D	OM611.981/987	A	+/-		04/00 ➧	901 501 07 01	**96842**	717 255 35	P/A
SPRINTER (95-) 216 CDI	D	OM612.981	M	+/-		04/00 ➧	901 501 07 01	**96842**	717 255 35	P/A
SPRINTER (95-) 216 CDI	D	OM612.981	A	+/-		04/00 ➧	901 501 07 01	**96842**	717 255 35	P/A
SPRINTER (95-) 308 CDI	D	OM611.987	M	+/-		04/00 ➧	901 501 07 01	**96842**	717 255 35	P/A
SPRINTER (95-) 308 CDI	D	OM611.987	A	+/-		04/00 ➧	901 501 07 01	**96842**	717 255 35	P/A
SPRINTER (95-) 308 D	D	OM 601	M	-		02/95 ➧ 04/00	901 501 07 01	**96842**	717 255 35	P/A
SPRINTER (95-) 308 D	D	OM 601	M	+		02/95 ➧ 04/00	901 501 07 01	**96842**	717 255 35	P/A
SPRINTER (95-) 308 D	D	OM 601	A	+		02/95 ➧ 04/00	901 501 07 01	**96842**	717 255 35	P/A
SPRINTER (95-) 310 D	D	OM 601	M	-		02/95 ➧ 04/00	901 501 07 01	**96842**	717 255 35	P/A
SPRINTER (95-) 310 D	D	OM 602	M	+		02/95 ➧ 04/00	901 501 07 01	**96842**	717 255 35	P/A
SPRINTER (95-) 310 D	D	OM 602	M	+		02/95 ➧ 04/00	901 501 07 01	**96842**	717 255 35	P/A
SPRINTER (95-) 310 D	D	OM 602	A	+		02/95 ➧ 04/00	901 501 07 01	**96842**	717 255 35	P/A
SPRINTER (95-) 311 CDI	D	OM611.981/987	M	+/-		04/00 ➧	901 501 07 01	**96842**	717 255 35	P/A
SPRINTER (95-) 311 CDI	D	OM611.981/987	A	+/-		04/00 ➧	901 501 07 01	**96842**	717 255 35	P/A
SPRINTER (95-) 312 D	D	OM 601	M	-		02/95 ➧ 04/00	901 501 07 01	**96842**	717 255 35	P/A
SPRINTER (95-) 312 D	D	OM 602	M	+		02/95 ➧ 04/00	901 501 07 01	**96842**	717 255 35	P/A
SPRINTER (95-) 312 D	D	OM 602	M	+		02/95 ➧ 04/00	901 501 07 01	**96842**	717 255 35	P/A
SPRINTER (95-) 312 D	D	OM 602	A	+		02/95 ➧ 04/00	901 501 07 01	**96842**	717 255 35	P/A
SPRINTER (95-) 313 CDI	D	OM611.981/987	M	+/-		04/00 ➧	901 501 07 01	**96842**	717 255 35	P/A
SPRINTER (95-) 313 CDI	D	OM611.981/987	A	+/-		04/00 ➧	901 501 07 01	**96842**	717 255 35	P/A
SPRINTER (95-) 316 CDI	D	OM612.981	M	+/-		04/00 ➧	901 501 07 01	**96842**	717 255 35	P/A
SPRINTER (95-) 316 CDI	D	OM612.981	A	+/-		04/00 ➧	901 501 07 01	**96842**	717 255 35	P/A
SPRINTER (95-) 408 CDI	D	OM611.987	M	+/-		04/00 ➧	901 501 07 01	**96842**	717 255 35	P/A
SPRINTER (95-) 408 CDI	D	OM611.987	A	+/-		04/00 ➧	901 501 07 01	**96842**	717 255 35	P/A
SPRINTER (95-) 408 D	D	OM 601	M	-		02/95 ➧ 04/00	901 501 07 01	**96842**	717 255 35	P/A
SPRINTER (95-) 408 D	D	OM 601	M	+		02/96 ➧	901 501 07 01	**96842**	717 255 35	P/A
SPRINTER (95-) 408 D	D	OM 601	M	+		02/96 ➧	901 501 07 01	**96842**	717 255 35	P/A
SPRINTER (95-) 408 D	D	OM 601	A	+/-		02/96 ➧	901 501 07 01	**96842**	717 255 35	P/A
SPRINTER (95-) 410 D	D	OM 601	M	-		02/95 ➧ 04/00	901 501 07 01	**96842**	717 255 35	P/A
SPRINTER (95-) 410 D	D	OM602.980	M	+		02/96 ➧	901 501 07 01	**96842**	717 255 35	P/A
SPRINTER (95-) 410 D	D	OM602.980	M	+		02/96 ➧	901 501 07 01	**96842**	717 255 35	P/A
SPRINTER (95-) 410 D	D	OM602.980	A	+		02/96 ➧	901 501 07 01	**96842**	717 255 35	P/A
SPRINTER (95-) 411 CDI	D	OM611.981/987	M	+/-		04/00 ➧	901 501 07 01	**96842**	717 255 35	P/A
SPRINTER (95-) 411 CDI	D	OM611.981/987	A	+/-		04/00 ➧	901 501 07 01	**96842**	717 255 35	P/A
SPRINTER (95-) 412 D	D	OM602.980	M	+		02/96 ➧	901 501 07 01	**96842**	717 255 35	P/A
SPRINTER (95-) 412 D	D	OM602.980	M	+		02/96 ➧	901 501 07 01	**96842**	717 255 35	P/A
SPRINTER (95-) 412 D	D	OM602.980	A	+		02/96 ➧	901 501 07 01	**96842**	717 255 35	P/A
SPRINTER (95-) 413 CDI	D	OM612.981	M	+/-		04/00 ➧	901 501 07 01	**96842**	717 255 35	P/A
SPRINTER (95-) 413 CDI	D	OM612.981	A	+/-		04/00 ➧	901 501 07 01	**96842**	717 255 35	P/A
SPRINTER (95-) 416 CDI	D	OM612.981	M	+/-		04/00 ➧	901 501 07 01	**96842**	717 255 35	P/A
SPRINTER (95-) 416 CDI	D	OM612.981	A	+/-		04/00 ➧	901 501 07 01	**96842**	717 255 35	P/A
SPRINTER (95-) 616 CDI	D	OM612.981	M	+/-		04/00 ➧	901 501 07 01	**96842**	717 255 35	P/A
SPRINTER (95-) 616 CDI	D	OM612.981	A	+/-		04/00 ➧	901 501 07 01	**96842**	717 255 35	P/A

INTERCOOLERS

	G/D			AC	Note		OE	Nissens	Dim. H W T	Mat.
MERCEDES LIGHT VAN (../..)										
VANEO (02-) 1.7 CDI	D	OM668.914	M/A	+/-		02/02 ➧	168 500 00 00	**96782**	395 112 34	P/A
VIANO W 639 (03-) 2.0 CDI	D	OM646	M	+/-		09/03 ➧	639 501 02 01	**96730**	633 133 50	P/A
VIANO W 639 (03-) 2.2 CDI	D	OM646	M	+/-		09/03 ➧	639 501 03 01	**96729**	633 158 50	P/A
VITO W 638 (96-) 108 CDI	D	OM611.940	M	-		03/99 ➧	638 501 29 01	**96894**	290 270 50	P/A
VITO W 638 (96-) 108 CDI	D	OM611.940	M	-		03/99 ➧	638 501 29 01	**96894**	290 270 50	P/A
VITO W 638 (96-) 108 CDI	D	OM611.940	M	+		03/99 ➧	638 501 29 01	**96894**	290 270 50	P/A
VITO W 638 (96-) 108 CDI	D	OM611.940	A	+		03/99 ➧	638 501 29 01	**96894**	290 270 50	P/A
VITO W 638 (96-) 108 D	D	OM601.942	M/A	-		02/96 ➧ 03/99	638 501 23 01	**96843**	290 272 52	P/A
VITO W 638 (96-) 108 D	D	OM601.942	M/A	+		02/96 ➧ 03/99	638 501 23 01	**96843**	290 272 52	P/A
VITO W 638 (96-) 108 D	D	OM601.942	M	-		02/96 ➧ 03/99	638 501 23 01	**96843**	290 272 52	P/A
VITO W 638 (96-) 110 CDI	D	OM611.980	M	-		03/99 ➧	638 501 29 01	**96894**	290 270 50	P/A
VITO W 638 (96-) 110 CDI	D	OM611.980	M	-		03/99 ➧	638 501 29 01	**96894**	290 270 50	P/A
VITO W 638 (96-) 110 CDI	D	OM611.980	M	+		03/99 ➧	638 501 29 01	**96894**	290 270 50	P/A
VITO W 638 (96-) 110 CDI	D	OM611.980	A	+		03/99 ➧	638 501 29 01	**96894**	290 270 50	P/A
VITO W 638 (96-) 110 TD	D	OM601.970	M/A	-		02/96 ➧ 03/99	638 501 23 01	**96843**	290 272 52	P/A
VITO W 638 (96-) 110 TD	D	OM601.970	M/A	+		02/96 ➧ 03/99	638 501 23 01	**96843**	290 272 52	P/A
VITO W 638 (96-) 110 TD	D	OM601.970	M	-		02/96 ➧ 03/99	638 501 23 01	**96843**	290 272 52	P/A
VITO W 638 (96-) 112 CDI	D	OM611.960	M	-		03/99 ➧	638 501 29 01	**96894**	290 270 50	P/A
VITO W 638 (96-) 112 CDI	D	OM611.960	M	-		03/99 ➧	638 501 29 01	**96894**	290 270 50	P/A
VITO W 638 (96-) 112 CDI	D	OM611.960	M	+		03/99 ➧	638 501 29 01	**96894**	290 270 50	P/A
VITO W 638 (96-) 112 CDI	D	OM611.960	A	+		03/99 ➧	638 501 29 01	**96894**	290 270 50	P/A
VITO W 639 (03-) 2.0 CDI	D	OM646	M	+/-		09/03 ➧	639 501 02 01	**96730**	633 133 50	P/A
VITO W 639 (03-) 2.2 CDI	D	OM646	M	+/-		09/03 ➧	639 501 03 01	**96729**	633 158 50	P/A
NISSAN LIGHT VAN										
INTERSTAR (02-) 1.9 dCi	D	F9Q	M	-		02/02 ➧ 11/03		**96890**	678 175 40	P/A
INTERSTAR (02-) 1.9 dCi	D	F9Q	M	-		11/03 ➧		**96767**	740 176 40	P/A
INTERSTAR (02-) 1.9 dCi	D	F9Q	M	+		01/03 ➧ 11/03		**96890**	678 175 40	P/A
INTERSTAR (02-) 1.9 dCi	D	F9Q	M	+		02/02 ➧ 01/03		**96890**	678 175 40	P/A
INTERSTAR (02-) 1.9 dCi	D	F9Q	M	+		11/03 ➧		**96767**	740 176 40	P/A
INTERSTAR (02-) 2.2 dCi	D	G9T	M	-		02/02 ➧ 11/03		**96890**	678 175 40	P/A
INTERSTAR (02-) 2.2 dCi	D	G9T	M	-		11/03 ➧		**96767**	740 176 40	P/A
INTERSTAR (02-) 2.2 dCi	D	G9T	M	+		01/03 ➧ 11/03		**96890**	678 175 40	P/A
INTERSTAR (02-) 2.2 dCi	D	G9T	M	+		02/02 ➧ 01/03		**96890**	678 175 40	P/A
INTERSTAR (02-) 2.2 dCi	D	G9T	M	+		11/03 ➧		**96767**	740 176 40	P/A
INTERSTAR (02-) 2.5 dCi	D	G9U	M	-		02/02 ➧ 11/03		**96890**	678 175 40	P/A
INTERSTAR (02-) 2.5 dCi	D	G9U	M	-		11/03 ➧		**96767**	740 176 40	P/A
INTERSTAR (02-) 2.5 dCi	D	G9U	M	+		01/03 ➧ 11/03		**96890**	678 175 40	P/A
INTERSTAR (02-) 2.5 dCi	D	G9U	M	+		02/02 ➧ 01/03		**96890**	678 175 40	P/A
INTERSTAR (02-) 2.5 dCi	D	G9U	M	+		11/03 ➧		**96767**	740 176 40	P/A
INTERSTAR (02-) 3.0 dCi	D	ZD30	M	+/-		07/03 ➧		**96890**	678 175 40	P/A
PRIMASTAR (02-) 1.9 dCi	D		M	-		07/02 ➧		**96762**	540 176 40	P/A
PRIMASTAR (02-) 1.9 dCi	D		M	+		07/02 ➧	14496-00QAA	**96762**	540 176 40	P/A
PRIMASTAR (02-) 2.5 dCi	D		M	-		07/02 ➧		**96775**	538 187 42	P/A
PRIMASTAR (02-) 2.5 dCi	D		M	+		07/02 ➧		**96775**	538 187 42	P/A
OPEL LIGHT VAN										
ARENA (98-) 1.9 dCi	D	F9Q	M	-		01/98 ➧ 11/03	4500847	**96890**	678 175 40	P/A
ARENA (98-) 1.9 dCi	D	F9Q	M	-		11/03 ➧	4415074	**96767**	740 176 40	P/A
ARENA (98-) 1.9 dCi	D	F9Q	M	+		01/98 ➧ 06/01	4500847	**96890**	678 175 40	P/A

INTERCOOLERS

	G/D			AC	Note		OE	Nissens	Dim. H W T	Mat.
OPEL LIGHT VAN (../..)										
ARENA (98-) 1.9 dCi	D	F9Q	M	+		01/03 ➧ 11/03	4500847	**96890**	678 175 40	P/A
ARENA (98-) 1.9 dCi	D	F9Q	M	+		06/01 ➧ 01/03	4500847	**96890**	678 175 40	P/A
ARENA (98-) 1.9 dCi	D	F9Q	M	+		11/03 ➧	4415074	**96767**	740 176 40	P/A
ARENA (98-) 2.2 dCi	D	G9T	M	-		01/98 ➧ 11/03	4500847	**96890**	678 175 40	P/A
ARENA (98-) 2.2 dCi	D	G9T	M	-		11/03 ➧	4415074	**96767**	740 176 40	P/A
ARENA (98-) 2.2 dCi	D	G9T	M	+		01/98 ➧ 06/01	4500847	**96890**	678 175 40	P/A
ARENA (98-) 2.2 dCi	D	G9T	M	+		01/03 ➧ 11/03	4500847	**96890**	678 175 40	P/A
ARENA (98-) 2.2 dCi	D	G9T	M	+		06/01 ➧ 01/03	4500847	**96890**	678 175 40	P/A
ARENA (98-) 2.2 dCi	D	G9T	M	+		11/03 ➧	4415074	**96767**	740 176 40	P/A
ARENA (98-) 2.2 dTi	D	G9T	M	-		01/98 ➧ 11/03	4500847	**96890**	678 175 40	P/A
ARENA (98-) 2.2 dTi	D	G9T	M	+		01/98 ➧ 06/01	4500847	**96890**	678 175 40	P/A
ARENA (98-) 2.2 dTi	D	G9T	M	+		01/03 ➧ 11/03	4500847	**96890**	678 175 40	P/A
ARENA (98-) 2.2 dTi	D	G9T	M	+		06/01 ➧ 01/03	4500847	**96890**	678 175 40	P/A
ARENA (98-) 2.5 dCi	D	G9U	M	-		01/98 ➧ 11/03	4500847	**96890**	678 175 40	P/A
ARENA (98-) 2.5 dCi	D	G9U	M	-		11/03 ➧	4415074	**96767**	740 176 40	P/A
ARENA (98-) 2.5 dCi	D	G9U	M	+		01/98 ➧ 06/01	4500847	**96890**	678 175 40	P/A
ARENA (98-) 2.5 dCi	D	G9U	M	+		01/03 ➧ 11/03	4500847	**96890**	678 175 40	P/A
ARENA (98-) 2.5 dCi	D	G9U	M	+		06/01 ➧ 01/03	4500847	**96890**	678 175 40	P/A
ARENA (98-) 2.5 dCi	D	G9U	M	+		11/03 ➧	4415074	**96767**	740 176 40	P/A
ARENA (98-) 2.8 dTi	D	S9W	M	-		10/98 ➧	4500847	**96890**	678 175 40	P/A
ARENA (98-) 2.8 dTi	D	S9W	M	+		01/03 ➧	4500847	**96890**	678 175 40	P/A
ARENA (98-) 2.8 dTi	D	S9W	M	+		10/98 ➧ 01/03	4500847	**96890**	678 175 40	P/A
COMBO (00-) 1.3 DTi	D	Y13DT	M	-		10/04 ➧	1300 410 +	**96656**	275 127 50	P/A
COMBO (00-) 1.3 DTi	D	Y13DT	M	+		10/04 ➧	1300 410 +	**96656**	275 127 50	P/A
COMBO (00-) 1.3 DTi	D	Z13DT	M	-		10/04 ➧	1300 410 +	**96656**	275 127 50	P/A
COMBO (00-) 1.3 DTi	D	Z13DT	M	+		10/04 ➧	1300 410 +	**96656**	275 127 50	P/A
COMBO (00-) 1.7 DTi	D	Y17DT	M	+/-		09/00 ➧	09196705 +	**96898**	275 135 50	P/A
COMBO (00-) 1.7 DTi	D	Y17DTL	M	+/-		09/00 ➧	09196705 +	**96898**	275 135 50	P/A
COMBO (00-) 1.7 DTi	D	Z17DTH	M	+/-		09/00 ➧	1300 410 +	**96656**	275 127 50	P/A
MOVANO (98-) 1.9 dCi	D	F9Q	M	-		01/98 ➧ 11/03	4500847	**96890**	678 175 40	P/A
MOVANO (98-) 1.9 dCi	D	F9Q	M	-		11/03 ➧	4415074	**96767**	740 176 40	P/A
MOVANO (98-) 1.9 dCi	D	F9Q	M	+		01/98 ➧ 06/01	4500847	**96890**	678 175 40	P/A
MOVANO (98-) 1.9 dCi	D	F9Q	M	+		01/03 ➧ 11/03	4500847	**96890**	678 175 40	P/A
MOVANO (98-) 1.9 dCi	D	F9Q	M	+		06/01 ➧ 01/03	4500847	**96890**	678 175 40	P/A
MOVANO (98-) 1.9 dCi	D	F9Q	M	+		11/03 ➧	4415074	**96767**	740 176 40	P/A
MOVANO (98-) 2.2 dCi	D	G9T	M	-		01/98 ➧ 11/03	4500847	**96890**	678 175 40	P/A
MOVANO (98-) 2.2 dCi	D	G9T	M	-		11/03 ➧	4415074	**96767**	740 176 40	P/A
MOVANO (98-) 2.2 dCi	D	G9T	M	+		01/98 ➧ 06/01	4500847	**96890**	678 175 40	P/A
MOVANO (98-) 2.2 dCi	D	G9T	M	+		01/03 ➧ 11/03	4500847	**96890**	678 175 40	P/A
MOVANO (98-) 2.2 dCi	D	G9T	M	+		06/01 ➧ 01/03	4500847	**96890**	678 175 40	P/A
MOVANO (98-) 2.2 dCi	D	G9T	M	+		11/03 ➧	4415074	**96767**	740 176 40	P/A
MOVANO (98-) 2.2 dTi	D	G9T	M	-		01/98 ➧ 11/03	4500847	**96890**	678 175 40	P/A
MOVANO (98-) 2.2 dTi	D	G9T	M	+		01/98 ➧ 06/01	4500847	**96890**	678 175 40	P/A
MOVANO (98-) 2.2 dTi	D	G9T	M	+		01/03 ➧ 11/03	4500847	**96890**	678 175 40	P/A
MOVANO (98-) 2.2 dTi	D	G9T	M	+		06/01 ➧ 01/03	4500847	**96890**	678 175 40	P/A
MOVANO (98-) 2.5 dCi	D	G9U	M	-		01/98 ➧ 11/03	4500847	**96890**	678 175 40	P/A
MOVANO (98-) 2.5 dCi	D	G9U	M	-		11/03 ➧	4415074	**96767**	740 176 40	P/A
MOVANO (98-) 2.5 dCi	D	G9U	M	+		01/98 ➧ 06/01	4500847	**96890**	678 175 40	P/A
MOVANO (98-) 2.5 dCi	D	G9U	M	+		01/03 ➧ 11/03	4500847	**96890**	678 175 40	P/A
MOVANO (98-) 2.5 dCi	D	G9U	M	+		06/01 ➧ 01/03	4500847	**96890**	678 175 40	P/A
MOVANO (98-) 2.5 dCi	D	G9U	M	+		11/03 ➧	4415074	**96767**	740 176 40	P/A

INTERCOOLERS

	G/D			AC	Note		OE	Nissens	Dim. H W T	Mat.
OPEL LIGHT VAN (../..)										
MOVANO (98-) 2.8 dTi	D	S9W	M	-		10/98 ➧	4500847	**96890**	678 175 40	P/A
MOVANO (98-) 2.8 dTi	D	S9W	M	+		01/03 ➧	4500847	**96890**	678 175 40	P/A
MOVANO (98-) 2.8 dTi	D	S9W	M	+		10/98 ➧ 01/03	4500847	**96890**	678 175 40	P/A
MOVANO (98-) 3.0 dCi	D	ZD30	M	+/-		01/03 ➧		**96890**	678 175 40	P/A
VIVARO (01-) 1.9 dTi	D	F9Q	M	-		05/01 ➧	4408078	**96762**	540 176 40	P/A
VIVARO (01-) 1.9 dTi	D	F9Q	M	+		05/01 ➧	4408078	**96762**	540 176 40	P/A
VIVARO (01-) 2.5 dTi	D	G9U	M	-		05/01 ➧	4411898	**96775**	538 187 42	P/A
VIVARO (01-) 2.5 dTi	D	G9U	M	+		05/01 ➧	4411898	**96775**	538 187 42	P/A
PEUGEOT LIGHT VAN										
BOXER (94-) 1.9 TD	D	XUD9UTF	M	+/-		02/94 ➧ 01/02	0384.E4	**96889**	295 205 62	P/A
BOXER (94-) 2.5 TD	D	DJ5T	M	-		02/94 ➧ 01/02	0384.E4	**96889**	295 205 62	P/A
BOXER (94-) 2.5 TD	D	DJ5T	M	+		02/94 ➧ 01/02	0384.E4	**96889**	295 205 62	P/A
BOXER (94-) 2.8 HDi	D	8140-43	M	+/-		02/94 ➧ 01/02	0384.E4	**96889**	295 205 62	P/A
BOXER (94-) 2.8 TD	D	8140-43/63	M	+/-		02/94 ➧ 01/02	0384.E4	**96889**	295 205 62	P/A
BOXER (02-) 2.0 HDi	D	DW10TD	M	-		01/02 ➧	0384.E4	**96889**	295 205 62	P/A
BOXER (02-) 2.0 HDi	D	DW10TD	M	+		01/02 ➧	0384.E4	**96889**	295 205 62	P/A
BOXER (02-) 2.2 HDi	D	DW12TED	M	-		01/02 ➧	0384.E4	**96889**	295 205 62	P/A
BOXER (02-) 2.2 HDi	D	DW12TED	M	+		01/02 ➧	0384.E4	**96889**	295 205 62	P/A
BOXER (02-) 2.8 HDi	D	8140-43S	M	-		01/02 ➧	0384.E4	**96889**	295 205 62	P/A
BOXER (02-) 2.8 HDi	D	8140-43S	M	+		01/02 ➧	0384.E4	**96889**	295 205 62	P/A
BOXER (02-) 2.8 TD	D	8140-43S	M	-		01/02 ➧	0384.E4	**96889**	295 205 62	P/A
E7 - EUROCAB 2.0 HDi	D	DW10BTED	M	+/-		01/01 ➧	0384.E7	**96849**	680 320 32	P/A
EXPERT (95-) 1.9 TD	D	XUDTE	M	+/-		10/95 ➧	0384.E7	**96849**	680 320 32	P/A
EXPERT (95-) 2.0 HDi	D	DW10ATED	M	+/-		09/00 ➧	0384.E7	**96849**	680 320 32	P/A
EXPERT (95-) 2.1 TD	D	XUD11ATE	M	+/-		10/95 ➧	0384.E7	**96849**	680 320 32	P/A
PARTNER (02-) 2.0 HDi	D	DW10TD	M	+/-		11/02 ➧	0384.F6 +	**96790**	300 127 64	P/A
PONTIAC LIGHT VAN										
G6 (05-) 2.0 i 16V TURBO	G		M	+/-		01/05 ➧		**96684**	400 647 29	P/A
G6 (05-) 2.0 i 16V TURBO	G		A	+/-		01/05 ➧		**96684**	400 647 29	P/A
RENAULT LIGHT VAN										
KANGOO (98-) 1.9 dCi	D	F9Q	M	+/-		01/02 ➧	82 00 073 413	**96648**	480 133 40	A/A
KANGOO (98-) 1.9 dTi	G	F8Q	M	-		03/00 ➧	82 00 073 413	**96648**	480 133 40	A/A
KANGOO (98-) 1.9 dTi	G	F9Q	M	+		12/99 ➧ 03/00	82 00 073 413	**96648**	480 133 40	A/A
MASTER (98-) 1.9 dCi	D	F9Q	M	-		01/98 ➧ 11/03	77 01 043 695	**96890**	678 175 40	P/A
MASTER (98-) 1.9 dCi	D	F9Q	M	-		11/03 ➧	77 01 057 121	**96767**	740 176 40	P/A
MASTER (98-) 1.9 dCi	D	F9Q	M	+		01/98 ➧ 06/01	77 01 043 695	**96890**	678 175 40	P/A
MASTER (98-) 1.9 dCi	D	F9Q	M	+		01/03 ➧ 11/03	77 01 043 695	**96890**	678 175 40	P/A
MASTER (98-) 1.9 dCi	D	F9Q	M	+		06/01 ➧ 01/03	77 01 043 695	**96890**	678 175 40	P/A
MASTER (98-) 1.9 dCi	D	F9Q	M	+		11/03 ➧	77 01 057 121	**96767**	740 176 40	P/A
MASTER (98-) 2.2 dCi	D	G9T	M	-		01/98 ➧ 11/03	77 01 043 695	**96890**	678 175 40	P/A
MASTER (98-) 2.2 dCi	D	G9T	M	-		11/03 ➧	77 01 057 121	**96767**	740 176 40	P/A
MASTER (98-) 2.2 dCi	D	G9T	M	+		01/98 ➧ 06/01	77 01 043 695	**96890**	678 175 40	P/A
MASTER (98-) 2.2 dCi	D	G9T	M	+		01/03 ➧ 11/03	77 01 043 695	**96890**	678 175 40	P/A
MASTER (98-) 2.2 dCi	D	G9T	M	+		06/01 ➧ 01/03	77 01 043 695	**96890**	678 175 40	P/A
MASTER (98-) 2.2 dCi	D	G9T	M	+		11/03 ➧	77 01 057 121	**96767**	740 176 40	P/A
MASTER (98-) 2.2 dTi	D	G9T	M	-		01/98 ➧ 11/03	77 01 043 695	**96890**	678 175 40	P/A

INTERCOOLERS

	G/D			AC	Note		OE	Nissens	Dim. H W T	Mat.
RENAULT LIGHT VAN (../..)										
MASTER (98-) 2.2 dTi	D	G9T	M	+		01/98 ➧ 06/01	77 01 043 695	**96890**	678 175 40	P/A
MASTER (98-) 2.2 dTi	D	G9T	M	+		01/03 ➧ 11/03	77 01 043 695	**96890**	678 175 40	P/A
MASTER (98-) 2.2 dTi	D	G9T	M	+		06/01 ➧ 01/03	77 01 043 695	**96890**	678 175 40	P/A
MASTER (98-) 2.5 dCi	D	G9U	M	-		07/98 ➧ 11/03	77 01 043 695	**96890**	678 175 40	P/A
MASTER (98-) 2.5 dCi	D	G9U	M	-		11/03 ➧	77 01 057 121	**96767**	740 176 40	P/A
MASTER (98-) 2.5 dCi	D	G9U	M	+		01/03 ➧ 11/03	77 01 043 695	**96890**	678 175 40	P/A
MASTER (98-) 2.5 dCi	D	G9U	M	+		06/01 ➧ 01/03	77 01 043 695	**96890**	678 175 40	P/A
MASTER (98-) 2.5 dCi	D	G9U	M	+		07/98 ➧ 06/01	77 01 043 695	**96890**	678 175 40	P/A
MASTER (98-) 2.5 dCi	D	G9U	M	+		11/03 ➧	77 01 057 121	**96767**	740 176 40	P/A
MASTER (98-) 2.8 dTi	D	S9W	M	-		07/98 ➧	77 01 043 695	**96890**	678 175 40	P/A
MASTER (98-) 2.8 dTi	D	S9W	M	+		09/98 ➧ 01/03	77 01 043 695	**96890**	678 175 40	P/A
MASTER (98-) 3.0 dCi	D	ZD30	M	+/-		07/03 ➧	77 01 043 695	**96890**	678 175 40	P/A
TRAFIC (01-) 1.9 dCi	D	F9Q	M	-		04/01 ➧	4408078 +	**96762**	540 176 40	P/A
TRAFIC (01-) 1.9 dCi	D	F9Q	M	+		04/01 ➧	4408078 +	**96762**	540 176 40	P/A
TRAFIC (01-) 1.9 dCi	D	F9Q	M	+		04/01 ➧	4408078 +	**96762**	540 176 40	P/A
TRAFIC (01-) 2.5 dCi	D	G9U	M	-		09/02 ➧	82 00 219 497	**96775**	538 187 42	P/A
TRAFIC (01-) 2.5 dCi	D	G9U	M	+		09/02 ➧	82 00 219 497	**96775**	538 187 42	P/A
VOLKSWAGEN LIGHT VAN										
CADDY (95-) 1.9 TDi	D	1Z	M	-		10/96 ➧ 03/97	6K0.145.805	**96769**	295 95 85	P/A
CADDY (95-) 1.9 TDi	D	1Z	M	+		10/96 ➧ 03/97	6K0.145.805	**96769**	295 95 85	P/A
CADDY (95-) 1.9 TDi	D	AHU	M	-	90 HP	10/96 ➧ 09/00	6K0.145.805	**96769**	295 95 85	P/A
CADDY (95-) 1.9 TDi	D	AHU	M	+		10/96 ➧ 09/00	6K0.145.805	**96769**	295 95 85	P/A
CADDY (95-) 1.9 TDi	D	ALE	M	-		09/97 ➧ 09/00	6K0.145.805	**96769**	295 95 85	P/A
CADDY (95-) 1.9 TDi	D	ALE	M	+		09/97 ➧ 09/00	6K0.145.805	**96769**	295 95 85	P/A
CADDY (95-) 1.9 TDi	D	ALH	M	-		09/00 ➧ 06/03	6K0.145.805 C+	**96796**	295 85 85	P/A
LT (96-) 2.5 TDi	D	AHD	M	+/-		05/96 ➧ 05/99	2D0.145.805	**96842**	717 255 35	P/A
LT (96-) 2.5 TDi	D	ANJ	M	+/-		05/99 ➧ 05/03	2D0.145.805	**96842**	717 255 35	P/A
LT (96-) 2.5 TDi	D	APA	M	+/-		05/99 ➧ 04/01	2D0.145.805	**96842**	717 255 35	P/A
LT (96-) 2.5 TDi	D	AVR	M	+/-		12/02 ➧ 05/03	2D0.145.805	**96842**	717 255 35	P/A
LT (96-) 2.5 TDi	D	BBE	M	+/-		04/01 ➧ 05/03	2D0.145.805	**96842**	717 255 35	P/A
LT (96-) 2.5 TDi	D	BBF	M	+/-		04/01 ➧ 05/03	2D0.145.805	**96842**	717 255 35	P/A
LT (96-) 2.8 TDi	D	AGK	M	+/-		07/97 ➧ 12/98	2D0.145.805	**96842**	717 255 35	P/A
LT (96-) 2.8 TDi	D	ATA	M	+/-		01/99 ➧ 01/02	2D0.145.805	**96842**	717 255 35	P/A
LT (96-) 2.8 TDi	D	AUH	M	+/-		02/02 ➧ 05/03	2D0.145.805	**96842**	717 255 35	P/A
LT (03-) 2.5 TDi	D	ANJ	M	-		06/03 ➧	2D0.145.805	**96842**	717 255 35	P/A
LT (03-) 2.5 TDi	D	ANJ	M	+		06/03 ➧	2D0.145.805	**96842**	717 255 35	P/A
LT (03-) 2.5 TDi	D	AVR	M	-		06/03 ➧	2D0.145.805	**96842**	717 255 35	P/A
LT (03-) 2.5 TDi	D	AVR	M	+		06/03 ➧	2D0.145.805	**96842**	717 255 35	P/A
LT (03-) 2.5 TDi	D	BBE	M	-		01/04 ➧	2D0.145.805	**96842**	717 255 35	P/A
LT (03-) 2.5 TDi	D	BBE	M	+		01/04 ➧	2D0.145.805	**96842**	717 255 35	P/A
LT (03-) 2.5 TDi	D	BBF	M	-		01/04 ➧	2D0.145.805	**96842**	717 255 35	P/A
LT (03-) 2.5 TDi	D	BBF	M	+		01/04 ➧	2D0.145.805	**96842**	717 255 35	P/A
LT (03-) 2.8 TD	D	BCQ	M	-		06/03 ➧	2D0.145.805	**96842**	717 255 35	P/A
LT (03-) 2.8 TD	D	BCQ	M	+		06/03 ➧	2D0.145.805	**96842**	717 255 35	P/A
LT (03-) 2.8 TDi	D	AUH	M	-		06/03 ➧	2D0.145.805	**96842**	717 255 35	P/A
LT (03-) 2.8 TDi	D	AUH	M	+		06/03 ➧	2D0.145.805	**96842**	717 255 35	P/A
TOUAREG (02-) 2.5 TDi	D	BAC	M/A	+/-		01/03 ➧	7L0.145.803 A	**96688**	287 292 50	P/A
TOUAREG (02-) 2.5 TDi	D	BLK	M/A	+/-		07/03 ➧	7L0.145.803 A	**96688**	287 292 50	P/A
TOUAREG (02-) 5.0 TDi	D	AYH	A	+/-		11/02 ➧	7L0.145.803 A+	**96688**	287 292 50	P/A

INTERCOOLERS

	G/D			AC	Note		OE	Nissens	Dim. H W T	Mat.
VOLKSWAGEN LIGHT VAN (../..)										
TOUAREG (02-) 5.0 TDi	D	AYH	A	+/-		11/02 ➧	7L0.145.804 A	**96687**	287 292 50	P/A
TOUAREG (02-) 5.0 TDi	D	BLE	A	+/-		11/04 ➧	7L0.145.803 A+	**96688**	287 292 50	P/A
TOUAREG (02-) 5.0 TDi	D	BWF	A	+/-		11/04 ➧	7L0.145.803 A+	**96688**	287 292 50	P/A
TOURAN (03-) 1.9 TDi	D	AVQ	M	+	HD	02/03 ➧	1K0.145.803 A	**96715**	617 406 32	A/A
TOURAN (03-) 1.9 TDi	D	AVQ	M	+/-		02/03 ➧	1K0.145.803 A	**96715**	617 406 32	A/A
TOURAN (03-) 1.9 TDi	D	BKC	M/A	-		02/03 ➧	1K0.145.803 A	**96715**	617 406 32	A/A
TOURAN (03-) 1.9 TDi	D	BKC	M/A	+		02/03 ➧	1K0.145.803 A	**96715**	617 406 32	A/A
TOURAN (03-) 1.9 TDi	D	BRU	M/A	-		02/03 ➧	1K0.145.803 A	**96715**	617 406 32	A/A
TOURAN (03-) 1.9 TDi	D	BRU	M/A	+		02/03 ➧	1K0.145.803 A	**96715**	617 406 32	A/A
TOURAN (03-) 2.0 PD TDi	D	AZV	M/A	+		02/03 ➧	1K0.145.803 A	**96715**	617 406 32	A/A
TOURAN (03-) 2.0 PD TDi	D	BKD	M/A	+		02/03 ➧	1K0.145.803 A	**96715**	617 406 32	A/A
TOURAN (03-) 2.0 PD TDi	D	BLY	M/A	+		02/03 ➧	1K0.145.803 A	**96715**	617 406 32	A/A
TOURAN (03-) 2.0 PD TDi	D	BMM	M/A	+		02/03 ➧	1K0.145.803 A	**96715**	617 406 32	A/A
TOURAN (03-) 2.0 PD TDi	D	BMN	M/A	+		02/03 ➧	1K0.145.803 A	**96715**	617 406 32	A/A
TRANSPORTER T4 (90-) 2.5 TDi	D	ACV	M	+/-		09/95 ➧ 06/03	701.145.805 A	**96658**	240 172 60	P/A
TRANSPORTER T4 (90-) 2.5 TDi	D	ACV	M	+/-		09/96 ➧ 06/03	701.145.805 A	**96658**	240 172 60	P/A
TRANSPORTER T4 (90-) 2.5 TDi	D	ACV	A	+/-		05/98 ➧ 06/03	701.145.805 A	**96658**	240 172 60	P/A
TRANSPORTER T4 (90-) 2.5 TDi	D	AHY	M	+/-		05/98 ➧ 09/00	7D0.145.803 A+	**96755**	694 415 34	P/A
TRANSPORTER T4 (90-) 2.5 TDi	D	AHY	M	+/-		05/98 ➧ 09/00	7D0.145.803 A+	**96755**	694 415 34	P/A
TRANSPORTER T4 (90-) 2.5 TDi	D	AJT	M	+/-		05/98 ➧ 06/03	7D0.145.803 A+	**96755**	694 415 34	P/A
TRANSPORTER T4 (90-) 2.5 TDi	D	AJT	M	+/-		05/98 ➧ 06/03	7D0.145.803 A+	**96755**	694 415 34	P/A
TRANSPORTER T4 (90-) 2.5 TDi	D	AUF	A	+/-		11/99 ➧ 06/03	7D0.145.803 A+	**96755**	694 415 34	P/A
TRANSPORTER T4 (90-) 2.5 TDi	D	AUF	A	+/-		11/99 ➧ 06/03	7D0.145.803 A+	**96755**	694 415 34	P/A
TRANSPORTER T4 (90-) 2.5 TDi	D	AXG	M	+/-		09/00 ➧ 06/03	7D0.145.803 A+	**96755**	694 415 34	P/A
TRANSPORTER T4 (90-) 2.5 TDi	D	AXG	M	+/-		09/00 ➧ 06/03	7D0.145.803 A+	**96755**	694 415 34	P/A
TRANSPORTER T4 (90-) 2.5 TDi	D	AYC	M/A	+/-		04/01 ➧ 06/03	7D0.145.803 A+	**96755**	694 415 34	P/A
TRANSPORTER T4 (90-) 2.5 TDi	D	AYC	M/A	+/-		04/01 ➧ 06/03	7D0.145.803 A+	**96755**	694 415 34	P/A
TRANSPORTER T4 (90-) 2.5 TDi	D	AYY	M	+/-		10/01 ➧ 06/03	7D0.145.803 A+	**96755**	694 415 34	P/A
TRANSPORTER T4 (90-) 2.5 TDi	D	AYY	M	+/-		10/01 ➧ 06/03	7D0.145.803 A+	**96755**	694 415 34	P/A
TRANSPORTER T5 (03-) 1.9 TDi	D	AXB	M	+/-		04/03 ➧	7H0.145.804 A+	**96683**	720 194 32	P/A
TRANSPORTER T5 (03-) 1.9 TDi	D	AXC	M	+/-		04/03 ➧	7H0.145.804 A+	**96683**	720 194 32	P/A
TRANSPORTER T5 (03-) 1.9 TDi	D	BRR	M	+/-		04/03 ➧	7H0.145.804 A+	**96683**	720 194 32	P/A
TRANSPORTER T5 (03-) 1.9 TDi	D	BRS	M	+/-		04/03 ➧	7H0.145.804 A+	**96683**	720 194 32	P/A
TRANSPORTER T5 (03-) 2.5 TDi	D	AXD	M	+/-		04/03 ➧	7H0.145.804 A+	**96683**	720 194 32	P/A
TRANSPORTER T5 (03-) 2.5 TDi	D	AXD	A	+/-		04/03 ➧	7H0.145.804 A+	**96683**	720 194 32	P/A
TRANSPORTER T5 (03-) 2.5 TDi	D	AXE	M	+/-		04/03 ➧	7H0.145.804 A+	**96683**	720 194 32	P/A
TRANSPORTER T5 (03-) 2.5 TDi	D	AXE	A	+/-		04/03 ➧	7H0.145.804 A+	**96683**	720 194 32	P/A
TRANSPORTER T5 (03-) 2.5 TDi	D	BLJ	M	+/-		11/03 ➧	7H0.145.804 A+	**96683**	720 194 32	P/A
TRANSPORTER T5 (03-) 2.5 TDi	D	BNZ	M	+/-		04/03 ➧	7H0.145.804 A+	**96683**	720 194 32	P/A
TRANSPORTER T5 (03-) 2.5 TDi	D	BPC	M	+/-		04/03 ➧	7H0.145.804 A+	**96683**	720 194 32	P/A

CONDENSERS

	G/D			AC	Note		OE		Nissens	Dim. H W T	Mat.
CHEVROLET LIGHT VAN											
LUMINA APV (89-) 3.1	G		A	+/-		09/89 ➧	52453114	+	**94393**	686 380 35	A/A
LUMINA APV (89-) 3.1	G		A	+/-		09/89 ➧	52461229		**94394**	655 385 25	A/A
LUMINA APV (89-) 3.4	G		A	+/-		09/89 ➧	52453114	+	**94393**	686 380 35	A/A
LUMINA APV (89-) 3.8	G		A	+/-		09/89 ➧ /95	52453114	+	**94393**	686 380 35	A/A
LUMINA APV (97-) 3.4	G		A	+/-		01/98 ➧ 12/99	52477673	+	**94843**	743 408 25	A/A
LUMINA APV (97-) 3.4	G		A	+/-		01/00 ➧ 12/00	52477673	+	**94843**	743 408 25	A/A
LUMINA APV (97-) 3.4	G		A	+/-		01/01 ➧	10326292	+	**94797**	735 370 22	A/A
MONTANA (89-) 3.1	G		A	+/-		09/89 ➧	52453114	+	**94393**	686 380 35	A/A
MONTANA (89-) 3.1	G		A	+/-		09/89 ➧	52461229		**94394**	655 385 25	A/A
MONTANA (89-) 3.4	G		A	+/-		09/89 ➧	52453114	+	**94393**	686 380 35	A/A
MONTANA (89-) 3.8	G		A	+/-		09/89 ➧	52453114	+	**94393**	686 380 35	A/A
MONTANA (97-) 3.4	G		A	+/-		01/97 ➧ 12/97	52477673	+	**94843**	743 408 25	A/A
MONTANA (97-) 3.4	G		A	+/-		01/98 ➧ 12/99	52477673	+	**94843**	743 408 25	A/A
MONTANA (97-) 3.4	G		A	+/-		01/00 ➧ 12/00	52477673	+	**94843**	743 408 25	A/A
MONTANA (97-) 3.4	G		A	+/-		01/01 ➧	10326292	+	**94797**	735 370 22	A/A
TRANS SPORT (89-) 3.1	G		A	+/-		09/89 ➧	52453114	+	**94393**	686 380 35	A/A
TRANS SPORT (89-) 3.1	G		A	+/-		09/89 ➧	52461229		**94394**	655 385 25	A/A
TRANS SPORT (89-) 3.4	G		A	+/-		09/89 ➧	52453114	+	**94393**	686 380 35	A/A
TRANS SPORT (89-) 3.8	G		A	+/-		09/89 ➧	52453114	+	**94393**	686 380 35	A/A
TRANS SPORT (97-) 3.4	G		A	+/-		01/97 ➧ 12/97	52477673	+	**94843**	743 408 25	A/A
TRANS SPORT (97-) 3.4	G		A	+/-		01/98 ➧ 12/99	52477673	+	**94843**	743 408 25	A/A
TRANS SPORT (97-) 3.4	G		A	+/-		01/00 ➧ 12/00	52477673	+	**94843**	743 408 25	A/A
TRANS SPORT (97-) 3.4	G		A	+/-		01/01 ➧	10326292	+	**94797**	735 370 22	A/A
VENTURE (89-) 3.1	G		A	+/-		09/89 ➧	52453114	+	**94393**	686 380 35	A/A
VENTURE (89-) 3.1	G		A	+/-		09/89 ➧	52461229		**94394**	655 385 25	A/A
VENTURE (89-) 3.4	G		A	+/-		09/89 ➧	52453114	+	**94393**	686 380 35	A/A
VENTURE (89-) 3.8	G		A	+/-		09/89 ➧	52453114	+	**94393**	686 380 35	A/A
VENTURE (97-) 3.4	G		A	+/-		01/97 ➧ 12/97	52477673	+	**94843**	743 408 25	A/A
VENTURE (97-) 3.4	G		A	+/-		01/98 ➧ 12/99	52477673	+	**94843**	743 408 25	A/A
VENTURE (97-) 3.4	G		A	+/-		01/00 ➧ 12/00	52477673	+	**94843**	743 408 25	A/A
VENTURE (97-) 3.4	G		A	+/-		01/01 ➧	10326292	+	**94797**	735 370 22	A/A
CITROEN LIGHT VAN											
BERLINGO (96-) 1.1 i	G	TU1M	M	+		07/96 ➧	6455.AV	+	**94313**	580 341 16	A/A
BERLINGO (96-) 1.1 i	G	TU1M	M	+		07/96 ➧	6455.Q9	+	**94200**	605 341 16	A/A
BERLINGO (96-) 1.4 i	G	TU3JP	M	+/-		07/96 ➧ 09/98	6455.Q9		**94200**	605 341 16	A/A
BERLINGO (96-) 1.4 i	G	TU3JP	M	+/-		10/98 ➧	6455.AV	+	**94313**	580 341 16	A/A
BERLINGO (96-) 1.6 i	G	TU5JP	M	+/-		07/96 ➧	6455.AV	+	**94313**	580 341 16	A/A
BERLINGO (96-) 1.6 i 16V	G	TU5JP4	M	+/-		10/98 ➧	6455.Q9		**94200**	605 341 16	A/A
BERLINGO (96-) 1.8 D	D	XUD7	M	+		06/96 ➧ 10/98	6455.V8		**94218**	668 341 16	A/A
BERLINGO (96-) 1.8 D	D	XUD7	M	+		10/98 ➧	6455.W4	+	**94276**	668 341 16	A/A
BERLINGO (96-) 1.8 i	G	XU7JB	M	+/-		07/97 ➧ 09/98	6455.Q9		**94200**	605 341 16	A/A
BERLINGO (96-) 1.8 i	G	XU7JB	M	+/-		10/98 ➧	6455.AV	+	**94313**	580 341 16	A/A
BERLINGO (96-) 1.9 D	D	XUD9,DW8, DW8B	M	+		06/96 ➧ 10/98	6455.V8		**94218**	668 341 16	A/A
BERLINGO (96-) 1.9 D	D	XUD9,DW8, DW8B	M	+		11/98 ➧	6455.W4	+	**94276**	668 341 16	A/A
BERLINGO (96-) 2.0 HDi	D	DW10TD	M	+/-		10/99 ➧	6455.W4	+	**94276**	668 341 16	A/A
BERLINGO (02-) 1.1 i	G	TU1JP	M	+/-		12/02 ➧	6455.AT	+	**94542**	560 361 16	A/A
BERLINGO (02-) 1.1 i	G	TU1JP	M	+/-		12/02 ➧	6455.AT	+	**94542**	560 361 16	A/A
BERLINGO (02-) 1.4 i	G	TU3JP	M	+/-		12/02 ➧	6455.AT	+	**94542**	560 361 16	A/A

CONDENSERS

	G/D			AC	Note		OE		Nissens	Dim. H	W	T	Mat.
CITROEN LIGHT VAN (../..)													
BERLINGO (02-) 1.4 i	G	TU3JP	M	+/-		12/02 ➧	6455.AT	+	**94542**	560	361	16	A/A
BERLINGO (02-) 1.6 HDI	D	DV6B	M	+/-		12/02 ➧	6455.AT	+	**94542**	560	361	16	A/A
BERLINGO (02-) 1.6 HDI 16V	D	DV6TED4	M	+/-		12/02 ➧	6455.AT	+	**94542**	560	361	16	A/A
BERLINGO (02-) 1.6 i 16V	G	TU5JP4	M	+/-		12/02 ➧	6455.AT	+	**94542**	560	361	16	A/A
BERLINGO (02-) 1.6 i 16V	G	TU5JP4	M	+/-		12/02 ➧	6455.AT	+	**94542**	560	361	16	A/A
BERLINGO (02-) 1.9 D	D	DW8B	M	+/-		12/02 ➧	6455.AT	+	**94542**	560	361	16	A/A
BERLINGO (02-) 2.0 HDi	D	DW10TD	M	+/-		12/02 ➧	6455.AT	+	**94542**	560	361	16	A/A
DISPATCH (95-) 1.6 i	G	SPI	M	+		10/95 ➧	6455.Q6		**94210**	725	451	16	A/A
DISPATCH (95-) 1.9 D	D	DW8	M	+		10/95 ➧	6455.Q6		**94210**	725	451	16	A/A
DISPATCH (95-) 1.9 D	D	XUD9A	M	+		10/95 ➧	6455.Q6		**94210**	725	451	16	A/A
DISPATCH (95-) 1.9 TD	D	XUDTE	M	+/-		10/95 ➧	6455.Q6		**94210**	725	451	16	A/A
DISPATCH (95-) 2.0 HDi	D	DW10ATED	M	+/-		02/00 ➧	6455.Q6		**94210**	725	451	16	A/A
DISPATCH (95-) 2.1 TD	D	XUD11ATE	M	+/-		10/95 ➧	6455.Q6		**94210**	725	451	16	A/A
JUMPER (94-) 1.9 D	D	XUD9AU	M	+/-		02/94 ➧ 01/02	6455.T3		**94700**	506	349	22	A/A
JUMPER (94-) 1.9 TD	D	XUD9UTF	M	+/-		02/94 ➧ 01/02	6455.T3		**94700**	506	349	22	A/A
JUMPER (94-) 2.0	G	XU102C	M	+/-	TROPIC	02/94 ➧ 01/02	6455.T3		**94700**	506	349	22	A/A
JUMPER (94-) 2.0	G	XU10J2U	M	+		02/94 ➧ 01/02	6455.T3		**94700**	506	349	22	A/A
JUMPER (94-) 2.5 D	D	DJ5	M	+		02/94 ➧ 01/02	6455.T3		**94700**	506	349	22	A/A
JUMPER (94-) 2.5 TD	D	DJ5T	M	+		02/94 ➧ 01/02	6455.T3		**94700**	506	349	22	A/A
JUMPER (94-) 2.8 D	D	SOFIM	M	+/-		02/94 ➧ 01/02	6455.T3		**94700**	506	349	22	A/A
JUMPER (94-) 2.8 HDi	D	8140-43/63	M	+/-		02/94 ➧ 01/02	6455.T3		**94700**	506	349	22	A/A
JUMPER (94-) 2.8 TD	D	8140-43/63	M	+/-		02/94 ➧ 01/02	6455.T3		**94700**	506	349	22	A/A
JUMPY (95-) 1.6 i	G	SPI	M	+		10/95 ➧	6455.Q6		**94210**	725	451	16	A/A
JUMPY (95-) 1.9 D	D	DW8	M	+		10/95 ➧	6455.Q6		**94210**	725	451	16	A/A
JUMPY (95-) 1.9 D	D	XUD9A	M	+		10/95 ➧	6455.Q6		**94210**	725	451	16	A/A
JUMPY (95-) 1.9 TD	D	XUDTE	M	+/-		10/95 ➧	6455.Q6		**94210**	725	451	16	A/A
JUMPY (95-) 2.0 HDi	D	DW10ATED	M	+/-		02/00 ➧	6455.Q6		**94210**	725	451	16	A/A
JUMPY (95-) 2.1 TD	D	XUD11ATE	M	+/-		10/95 ➧	6455.Q6		**94210**	725	451	16	A/A
RELAY (94-) 1.9 D	D	XUD9AU	M	+/-		02/94 ➧ 01/02	6455.T3		**94700**	506	349	22	A/A
RELAY (94-) 1.9 TD	D	XUD9UTF	M	+/-		02/94 ➧ 01/02	6455.T3		**94700**	506	349	22	A/A
RELAY (94-) 2.0	G	XU102C	M	+/-		02/94 ➧ 01/02	6455.T3		**94700**	506	349	22	A/A
RELAY (94-) 2.0	G	XU10J2U	M	+		02/94 ➧ 01/02	6455.T3		**94700**	506	349	22	A/A
RELAY (94-) 2.5 D	D	DJ5	M	+		02/94 ➧ 01/02	6455.T3		**94700**	506	349	22	A/A
RELAY (94-) 2.5 TD	D	DJ5T	M	+		02/94 ➧ 01/02	6455.T3		**94700**	506	349	22	A/A
RELAY (94-) 2.8 D	D	2798	M	+/-		02/94 ➧ 01/02	6455.T3		**94700**	506	349	22	A/A
RELAY (94-) 2.8 HDi	D	8140-43/63	M	+/-		02/94 ➧ 01/02	6455.T3		**94700**	506	349	22	A/A
RELAY (94-) 2.8 TD	D	8140-43/63	M	+/-		02/94 ➧ 01/02	6455.T3		**94700**	506	349	22	A/A
FIAT LIGHT VAN													
DOBLO (01-) 1.2 i	G	223 A5.000	M	+		03/01 ➧	46803033		**94631**	560	312	18	A/A
DOBLO (01-) 1.3 JTD	D	188 A9.000	M	+		01/03 ➧	46820833	+	**94727**	570	310	16	A/A
DOBLO (01-) 1.3 JTD	D	188 A9.000	M	+		01/03 ➧	46821270		**94633**	560	309	16	A/A
DOBLO (01-) 1.6 i 16V	G	182 B6.000	M	+		10/01 ➧ 05/05	46803033		**94631**	560	312	18	A/A
DOBLO (01-) 1.9 D	D	223 A6.000	M	+		03/01 ➧	46736891		**94632**	488	312	18	A/A
DOBLO (01-) 1.9 JTD	D	182 B9.000	M	+		10/01 ➧	46820833	+	**94727**	570	310	16	A/A
DUCATO (94-) 1.9 D	D	D9B	M	+/-		02/94 ➧ 01/02	1312857080		**94700**	506	349	22	A/A
DUCATO (94-) 1.9 TD	D	XUD9TF	M	+		02/94 ➧ 01/02	1312857080		**94700**	506	349	22	A/A
DUCATO (94-) 2.0 i	G	RFW	M	+		02/94 ➧ 01/02	1312857080		**94700**	506	349	22	A/A
DUCATO (94-) 2.0 JTD	D	DW10TD	M	+		02/94 ➧ 01/02	1312857080		**94700**	506	349	22	A/A
DUCATO (94-) 2.5 D	D	8140.67	M	+		02/94 ➧ 01/02	1312857080		**94700**	506	349	22	A/A

CONDENSERS

	G/D			AC	Note		OE	Nissens	Dim. H	W	T	Mat.
FIAT LIGHT VAN (../..)												
DUCATO (94-) 2.5 JTD	D	8140.47	M	+		02/94 ➧ 01/02	1312857080	**94700**	506	349	22	A/A
DUCATO (94-) 2.5 TD	D	8140.47	M	+		02/94 ➧ 01/02	1312857080	**94700**	506	349	22	A/A
DUCATO (94-) 2.8 D	D	8140.63	M	+/-		02/94 ➧ 01/02	1312857080	**94700**	506	349	22	A/A
DUCATO (94-) 2.8 JTD	D	8140.43S	M	+/-		02/94 ➧ 11/01	1312857080	**94700**	506	349	22	A/A
DUCATO (94-) 2.8 TD	D	8140.43	M	+/-		02/94 ➧ 11/01	1312857080	**94700**	506	349	22	A/A
SCUDO (96-) 1.6 i	G	220 A2.000	M	+		07/95 ➧	1474080080	**94210**	725	451	16	A/A
SCUDO (96-) 1.9 D	D	D9B	M	+		07/95 ➧	1474080080	**94210**	725	451	16	A/A
SCUDO (96-) 1.9 TD	D	D8B	M	+/-		07/95 ➧	1474080080	**94210**	725	451	16	A/A
SCUDO (96-) 2.0 i 16V	G	RFN	M	+		07/95 ➧	1474080080	**94210**	725	451	16	A/A
SCUDO (96-) 2.0 JTD	D	RHX	M	+/-		02/00 ➧	6455.Q6	**94210**	725	451	16	A/A
SCUDO (96-) 2.0 JTD	D	RHZ	M	+/-		02/00 ➧	6455.Q6	**94210**	725	451	16	A/A
FORD LIGHT VAN												
EXPLORER (91-) 4.0 i	G		A	+/-		01/91 ➧ 11/94	3513277 +	**94472**	491	381	21	A/A
EXPLORER (91-) 4.0 i	G		A	+/-		12/94 ➧ 08/96	3858115 +	**94473**	520	465	16	A/A
MAVERICK (96-) 2.4 i 12V	D	KA24E	M	+/-		05/96 ➧	1956440 +	**94501**	635	372	18	A/A
MAVERICK (96-) 2.4 i 12V	D	KA24E	M	+/-		05/96 ➧	1961628 +	**94863**	640	345	20	A/A
MAVERICK (96-) 2.7 TDi	D	TD27T	M	+/-		05/96 ➧	1956440 +	**94501**	635	372	18	A/A
MAVERICK (96-) 2.7 TDi	D	TD27T	A	+/-		05/96 ➧	1956440 +	**94501**	635	372	18	A/A
MAVERICK (02-) 2.0 i 16V	G		M/A	+/-		09/02 ➧	4095948 +	**94731**	705	429	22	A/A
MAVERICK (02-) 2.3 i 16V	G		M/A	+/-		09/02 ➧	EC161480A	**94731**	705	429	22	A/A
MAVERICK (02-) 3.0 i V6 24V	G		M/A	+/-		09/02 ➧	4095948 +	**94731**	705	429	22	A/A
PICKUP F-SER (85-)				+		/97 ➧	F65Z19712AB+	**94474**	0	0	0	A/A
RANGER (98-) 2.5 D	D	WL	M/A	+/-		06/98 ➧	4066739	**94729**	0	0	0	A/A
RANGER (98-) 2.5 TD	D	WLT	M/A	+/-		01/03 ➧	4066739 +	**94729**	0	0	0	A/A
RANGER (98-) 2.5 TD	D	WLT	M/A	+/-		06/98 ➧ 01/03	4066739 +	**94729**	0	0	0	A/A
RANGER (98-) 2.9 D	D		M/A	+/-		06/98 ➧	4066739	**94729**	0	0	0	A/A
TRANSIT (94-) 2.0 EFi	G		M	+		08/94 ➧	1055288 +	**94483**	650	365	22	A/A
TRANSIT (94-) 2.5 D	D		M	+		08/94 ➧	1055288 +	**94483**	650	365	22	A/A
TRANSIT (94-) 2.5 TD	D		M	+		08/94 ➧	1055288 +	**94483**	650	365	22	A/A
TRANSIT (94-) 2.5 TD	D		A	+		08/94 ➧	1055288 +	**94483**	650	365	22	A/A
TRANSIT (94-) 2.5 TDi	D		M	+		08/94 ➧	1055288 +	**94483**	650	365	22	A/A
TRANSIT (00-) 2.0 D 75 HP	D		M	+/-		08/00 ➧	4041973 +	**94577**	860	361	16	A/A
TRANSIT (00-) 2.0 D 85 HP	D		M	+/-		08/00 ➧	4041973 +	**94577**	860	361	16	A/A
TRANSIT (00-) 2.0 D 100 HP	D		M	+/-		08/00 ➧	4041973 +	**94577**	860	361	16	A/A
TRANSIT (00-) 2.0 TDCI 125 HP	D		M	+/-		08/00 ➧	4041973 +	**94577**	860	361	16	A/A
TRANSIT (00-) 2.3 i 16V	G		M	+/-		01/00 ➧	4041973 +	**94577**	860	361	16	A/A
TRANSIT (00-) 2.4 D 75 HP	D		M	+		01/00 ➧	4041973 +	**94577**	860	361	16	A/A
TRANSIT (00-) 2.4 D 90 HP	D		M	+		01/00 ➧	4041973 +	**94577**	860	361	16	A/A
TRANSIT (00-) 2.4 D 115 HP	D		M	+		07/00 ➧	4041973 +	**94577**	860	361	16	A/A
TRANSIT (00-) 2.4 D 120 HP	D		M	+		07/00 ➧	4041973 +	**94577**	860	361	16	A/A
TRANSIT (00-) 2.4 D 125 HP	D		M	+		07/00 ➧	4041973 +	**94577**	860	361	16	A/A
TRANSIT (00-) 2.4 TDCI 135 HP	D		M	+		03/04 ➧	4041973 +	**94577**	860	361	16	A/A
TRANSIT CONNECT (02-) 1.8 Di	D		M	+	75 HP	05/02 ➧	2T1H 19710 AB+	**94664**	790	361	16	A/A
TRANSIT CONNECT (02-) 1.8 Di	D		M	+	90 HP	08/02 ➧	2T1H 19710 AB+	**94664**	790	361	16	A/A
TRANSIT CONNECT (02-) 1.8 i 16V	G		M	+		05/02 ➧	2T1H 19710 AB+	**94664**	790	361	16	A/A
TRANSIT CONNECT (02-) 1.8 TDCi	D		M	+	75 HP	08/02 ➧	2T1H 19710 AB+	**94664**	790	361	16	A/A
TRANSIT CONNECT (02-) 1.8 TDCi	D		M	+	90 HP	08/02 ➧	2T1H 19710 AB+	**94664**	790	361	16	A/A

CONDENSERS

	G/D			AC	Note		OE	Nissens	Dim. H	Dim. W	Dim. T	Mat.
FORD LIGHT VAN (../..)												
WINDSTAR (94-)				+			XF2Z19712AA	**94469**	817	398	20	A/A
FORD USA LIGHT VAN												
AEROSTAR (85-) 2.3	G		M/A	+/-		01/85 ➧	E69Z 19712 B	**94470**	0	0	0	A/A
AEROSTAR (85-) 2.8	G		M/A	+/-		01/85 ➧	E69Z 19712 B	**94470**	0	0	0	A/A
AEROSTAR (85-) 3.0	G		M/A	+/-		01/85 ➧	E69Z 19712 B	**94470**	0	0	0	A/A
AEROSTAR (85-) 4.0	G		M/A	+/-		01/85 ➧	E69Z 19712 B	**94470**	0	0	0	A/A
BRONCO (85-) 2.9	G		M/A	+/-		01/85 ➧	F47H19710AA	**94472**	491	381	21	A/A
BRONCO (85-) 4.9	G		M/A	+/-		01/85 ➧	F47H19710AA	**94472**	491	381	21	A/A
BRONCO (85-) 5.0	G		M/A	+/-		01/85 ➧	F47H19710AA	**94472**	491	381	21	A/A
BRONCO (85-) 5.8	G		M/A	+/-		01/85 ➧	F47H19710AA	**94472**	491	381	21	A/A
RANGER (85-) 2.9	G		M/A	+/-		01/85 ➧	F47H19710AA	**94472**	491	381	21	A/A
RANGER (85-) 4.9	G		M/A	+/-		01/85 ➧	F47H19710AA	**94472**	491	381	21	A/A
RANGER (85-) 5.0	G		M/A	+/-		01/85 ➧	F47H19710AA	**94472**	491	381	21	A/A
RANGER (85-) 5.8	G		M/A	+/-		01/85 ➧	F47H19710AA	**94472**	491	381	21	A/A
RANGER PICKUP (93-) 2.3	G		M/A	+/-		01/93 ➧	F47H19710AA+	**94472**	491	381	21	A/A
RANGER PICKUP (93-) 2.3	G		M/A	+/-		01/93 ➧	F57Z19712A+	**94475**	510	437	22	A/A
RANGER PICKUP (93-) 3.0	G		M/A	+/-		01/93 ➧	F47H19710AA+	**94472**	491	381	21	A/A
RANGER PICKUP (93-) 4.0	G		M/A	+/-		01/93 ➧	F47H19710AA+	**94472**	491	381	21	A/A
RANGER PICKUP (98-) 2.3 i	G		M/A	+/-		01/98 ➧	F87Z19712BA+	**94476**	0	0	0	A/A
RANGER PICKUP (98-) 2.5 i	G		M/A	+/-		01/98 ➧	F87Z19712BA+	**94476**	0	0	0	A/A
RANGER PICKUP (98-) 3.0 i V6	G		M/A	+/-		01/98 ➧ 12/00	F87Z19712BA+	**94476**	0	0	0	A/A
RANGER PICKUP (98-) 3.0 i V6	G		M/A	+/-		01/01 ➧	F87Z19712BA+	**94476**	0	0	0	A/A
RANGER PICKUP (98-) 4.0 i V6	G		M/A	+/-		01/98 ➧ 12/00	F87Z19712BA+	**94476**	0	0	0	A/A
RANGER PICKUP (98-) 4.0 i V6	G		M/A	+/-		01/01 ➧	F87Z19712BA+	**94476**	0	0	0	A/A
HYUNDAI LIGHT VAN												
GALLOPER (91-)				+			HJ730002/3	**94039**	633	365	17	A/A
H-100 MINI BUS (93-) 2.4 i	G	G4CS	M	-		07/93 ➧	97606-4A000+	**94038**	633	386	17	A/A
H-100 MINI BUS (93-) 2.4 i	G	G4CS	M	+		07/93 ➧	97606-4A000+	**94038**	633	386	17	A/A
H-100 MINI BUS (93-) 2.5 D	D	D4BA	M	+/-		07/93 ➧	97606-4A000+	**94038**	633	386	17	A/A
H-100 MINI BUS (93-) 2.5 D	D	D4BB	M	+/-		07/93 ➧	97606-4A000+	**94038**	633	386	17	A/A
H-100 MINI BUS (93-) 2.5 TD	D	D4BF	M	+/-		07/93 ➧	97606-4A000+	**94038**	633	386	17	A/A
H-100 MINI BUS (93-) 2.6 TD	D		M	+/-		07/93 ➧	97606-4A000+	**94038**	633	386	17	A/A
H-100 MINI BUS (93-) 2.6 TD	D		A	+/-		07/93 ➧	97606-4A000+	**94038**	633	386	17	A/A
H-100 PORTER (97-) 2.4 i	G	G4CS	M	+/-		06/96 ➧	97606-4A000+	**94038**	633	386	17	A/A
H-100 PORTER (97-) 2.5 D	D	D4BA	M	+/-		06/96 ➧	97606-4A000+	**94038**	633	386	17	A/A
H-100 PORTER (97-) 2.5 D	D	D4BB	M	+/-		06/96 ➧	97606-4A000+	**94038**	633	386	17	A/A
H-100 PORTER (97-) 2.5 TD	D	D4BF	M	+/-		06/96 ➧	97606-4A000+	**94038**	633	386	17	A/A
H-100 PORTER (97-) 2.6 TD	D	D4BB	M	+/-		06/96 ➧	97606-4A000+	**94038**	633	386	17	A/A
H1 (97-) 2.4 i	G	G4CS	M	+/-		10/97 ➧	97606-4A000+	**94038**	633	386	17	A/A
H1 (97-) 2.4 i	G	G4CS	A	+/-		10/97 ➧	97606-4A000+	**94038**	633	386	17	A/A
H1 (97-) 2.5 TD	D	D4BF	M	+/-		10/97 ➧	97606-4A000+	**94038**	633	386	17	A/A
H1 (97-) 2.5 TD	D	D4BF	A	+/-		10/97 ➧	97606-4A000+	**94038**	633	386	17	A/A
H1 (97-) 2.5 TDi	D	D4BH	M	+/-	With IC	10/97 ➧	97606-4A000+	**94038**	633	386	17	A/A
H1 (97-) 2.5 TDi	D	D4BH	A	+/-	With IC	10/97 ➧	97606-4A000+	**94038**	633	386	17	A/A
H1 (97-) 2.6 D	D		M	+/-		10/97 ➧	97606-4A000+	**94038**	633	386	17	A/A
H1 (97-) 2.6 D	D		A	+/-		10/97 ➧	97606-4A000+	**94038**	633	386	17	A/A

CONDENSERS

	G/D			AC	Note		OE	Nissens	Dim. H	W	T	Mat.
HYUNDAI LIGHT VAN (../..)												
STAREX (93-) 2.4 i	G	G4CS	M	+/-		07/93 ➧	97606-4A000+	**94038**	633	386	17	A/A
STAREX (93-) 2.4 i	G	G4CS	M	+/-		07/93 ➧	97606-4A000+	**94038**	633	386	17	A/A
STAREX (93-) 2.5 TD	D	D4BF	M	+/-		07/93 ➧	97606-4A000+	**94038**	633	386	17	A/A
STAREX (93-) 2.5 TD	D	D4BF	M	+/-		07/93 ➧	97606-4A000+	**94038**	633	386	17	A/A
KIA LIGHT VAN												
K-SERIE (04-) 2.5 TCI	D	D4BH	M	+/-		07/04 ➧	97605-4E400	**94821**	0	0	0	A/A
K-SERIE (04-) 2.7 D	D	NA	M	+/-		07/04 ➧	97605-4E200	**94822**	0	0	0	A/A
LDV (96-) LIGHT VAN												
CONVOY (98-) 2.5 DI	D	EN55	M	+/-		10/98 ➧	1618 012	**94117**	575	308	25	A/A
CONVOY (98-) 2.5 TDi	D	ET70	M	+/-		10/98 ➧	1618 012	**94117**	575	308	25	A/A
MAZDA LIGHT VAN												
B 2500 (96-) 2.5 D	D	MD25NA	M	+/-		02/96 ➧	UG95-61-480+	**94729**	0	0	0	A/A
B 2500 (96-) 2.5 D	D	WL	M	+/-		02/96 ➧	UG95-61-480+	**94729**	0	0	0	A/A
B 2500 (96-) 2.5 TD	D	MD25TI	M	+/-		02/96 ➧	UG95-61-480+	**94729**	0	0	0	A/A
B 2500 (96-) 2.5 TD	D	WLT	M	+/-		02/96 ➧	UG95-61-480+	**94729**	0	0	0	A/A
MPV LV52 3.0 i	G		M/A	+		01/89 ➧ 12/93	LA01-61-480	**94352**	653	404	0	A/A
TRIBUTE (02-) 2.0 i 16V	G		M/A	+/-		09/02 ➧	EC161480A	**94731**	705	429	22	A/A
TRIBUTE (02-) 2.3 i 16V	G		M/A	+/-		09/02 ➧	EC161480A	**94731**	705	429	22	A/A
TRIBUTE (02-) 3.0 i V6 24V	G		M/A	+/-		09/02 ➧	EC161480A	**94731**	705	429	22	A/A
MERCEDES LIGHT VAN												
SPRINTER (95-) 208 CDI	D	OM611.987	M	+/-		04/00 ➧	901 500 04 54+	**94225**	665	371	16	A/A
SPRINTER (95-) 208 CDI	D	OM611.987	A	+/-		04/00 ➧	901 500 04 54+	**94225**	665	371	16	A/A
SPRINTER (95-) 208 D	D	OM 601	M	+		01/95 ➧ 04/00	901 500 04 54+	**94225**	665	371	16	A/A
SPRINTER (95-) 208 D	D	OM 601	M	+		01/95 ➧ 04/00	901 500 04 54+	**94225**	665	371	16	A/A
SPRINTER (95-) 208 D	D	OM 601	A	+		01/95 ➧ 04/00	901 500 04 54+	**94225**	665	371	16	A/A
SPRINTER (95-) 210 D	D	OM 601	M	+		02/95 ➧ 04/00	901 500 04 54+	**94225**	665	371	16	A/A
SPRINTER (95-) 210 D	D	OM 602	M	+		02/95 ➧ 04/00	901 500 04 54+	**94225**	665	371	16	A/A
SPRINTER (95-) 210 D	D	OM 602	A	+		02/95 ➧ 04/00	901 500 04 54+	**94225**	665	371	16	A/A
SPRINTER (95-) 211 CDI	D	OM611.981/987	M	+/-		04/00 ➧	901 500 04 54+	**94225**	665	371	16	A/A
SPRINTER (95-) 211 CDI	D	OM611.981/987	A	+/-		04/00 ➧	901 500 04 54+	**94225**	665	371	16	A/A
SPRINTER (95-) 212 D	D	OM 601	M	+		02/95 ➧ 04/00	901 500 04 54+	**94225**	665	371	16	A/A
SPRINTER (95-) 212 D	D	OM 602	M	+		02/95 ➧ 04/00	901 500 04 54+	**94225**	665	371	16	A/A
SPRINTER (95-) 212 D	D	OM 602	A	+		02/95 ➧ 04/00	901 500 04 54+	**94225**	665	371	16	A/A
SPRINTER (95-) 213 CDI	D	OM611.981/987	M	+/-		04/00 ➧	901 500 04 54+	**94225**	665	371	16	A/A
SPRINTER (95-) 213 CDI	D	OM611.981/987	A	+/-		04/00 ➧	901 500 04 54+	**94225**	665	371	16	A/A
SPRINTER (95-) 214	G	M 111	M	+		02/95 ➧	901 500 04 54+	**94225**	665	371	16	A/A
SPRINTER (95-) 214	G	M 111	A	+		02/95 ➧	901 500 04 54+	**94225**	665	371	16	A/A
SPRINTER (95-) 216 CDI	D	OM612.981	M	+/-		04/00 ➧	901 500 04 54+	**94225**	665	371	16	A/A
SPRINTER (95-) 216 CDI	D	OM612.981	A	+/-		04/00 ➧	901 500 04 54+	**94225**	665	371	16	A/A
SPRINTER (95-) 308 CDI	D	OM611.987	M	+/-		04/00 ➧	901 500 04 54+	**94225**	665	371	16	A/A
SPRINTER (95-) 308 CDI	D	OM611.987	A	+/-		04/00 ➧	901 500 04 54+	**94225**	665	371	16	A/A
SPRINTER (95-) 308 D	D	OM 601	M	+		02/95 ➧ 04/00	901 500 04 54+	**94225**	665	371	16	A/A
SPRINTER (95-) 308 D	D	OM 601	A	+		02/95 ➧ 04/00	901 500 04 54+	**94225**	665	371	16	A/A
SPRINTER (95-) 310 D	D	OM 602	M	+		02/95 ➧ 04/00	901 500 04 54+	**94225**	665	371	16	A/A
SPRINTER (95-) 310 D	D	OM 602	M	+		02/95 ➧ 04/00	901 500 04 54+	**94225**	665	371	16	A/A
SPRINTER (95-) 310 D	D	OM 602	A	+		02/95 ➧ 04/00	901 500 04 54+	**94225**	665	371	16	A/A
SPRINTER (95-) 311 CDI	D	OM611.981/987	M	+/-		04/00 ➧	901 500 04 54+	**94225**	665	371	16	A/A

CONDENSERS

	G/D			AC	Note		OE	Nissens	Dim. H W T	Mat.
MERCEDES LIGHT VAN (../..)										
SPRINTER (95-) 311 CDI	D	OM611.981/987	A	+/-		04/00 ➧	901 500 04 54+	**94225**	665 371 16	A/A
SPRINTER (95-) 312 D	D	OM 602	M	+		02/95 ➧ 04/00	901 500 04 54+	**94225**	665 371 16	A/A
SPRINTER (95-) 312 D	D	OM 602	M	+		02/95 ➧ 04/00	901 500 04 54+	**94225**	665 371 16	A/A
SPRINTER (95-) 312 D	D	OM 602	A	+		02/95 ➧ 04/00	901 500 04 54+	**94225**	665 371 16	A/A
SPRINTER (95-) 313 CDI	D	OM611.981/987	M	+/-		04/00 ➧	901 500 04 54+	**94225**	665 371 16	A/A
SPRINTER (95-) 313 CDI	D	OM611.981/987	A	+/-		04/00 ➧	901 500 04 54+	**94225**	665 371 16	A/A
SPRINTER (95-) 314	G	M 111	M	+		02/95 ➧ 04/00	901 500 04 54+	**94225**	665 371 16	A/A
SPRINTER (95-) 314	G	M 111	A	+		02/95 ➧ 04/00	901 500 04 54+	**94225**	665 371 16	A/A
SPRINTER (95-) 316 CDI	D	OM612.981	M	+/-		04/00 ➧	901 500 04 54+	**94225**	665 371 16	A/A
SPRINTER (95-) 316 CDI	D	OM612.981	A	+/-		04/00 ➧	901 500 04 54+	**94225**	665 371 16	A/A
SPRINTER (95-) 408 CDI	D	OM611.987	M	+/-		04/00 ➧	901 500 04 54+	**94225**	665 371 16	A/A
SPRINTER (95-) 408 CDI	D	OM611.987	A	+/-		04/00 ➧	901 500 04 54+	**94225**	665 371 16	A/A
SPRINTER (95-) 408 D	D	OM 601	M	+		02/96 ➧	901 500 04 54+	**94225**	665 371 16	A/A
SPRINTER (95-) 408 D	D	OM 601	M	+		02/96 ➧	901 500 04 54+	**94225**	665 371 16	A/A
SPRINTER (95-) 408 D	D	OM 601	A	+/-		02/96 ➧	901 500 04 54+	**94225**	665 371 16	A/A
SPRINTER (95-) 410 D	D	OM602.980	M	+		02/96 ➧	901 500 04 54+	**94225**	665 371 16	A/A
SPRINTER (95-) 410 D	D	OM602.980	M	+		02/96 ➧	901 500 04 54+	**94225**	665 371 16	A/A
SPRINTER (95-) 410 D	D	OM602.980	A	+		02/96 ➧	901 500 04 54+	**94225**	665 371 16	A/A
SPRINTER (95-) 411 CDI	D	OM611.981/987	M	+/-		04/00 ➧	901 500 04 54+	**94225**	665 371 16	A/A
SPRINTER (95-) 411 CDI	D	OM611.981/987	A	+/-		04/00 ➧	901 500 04 54+	**94225**	665 371 16	A/A
SPRINTER (95-) 412 D	D	OM602.980	M	+		02/96 ➧	901 500 04 54+	**94225**	665 371 16	A/A
SPRINTER (95-) 412 D	D	OM602.980	M	+		02/96 ➧	901 500 04 54+	**94225**	665 371 16	A/A
SPRINTER (95-) 412 D	D	OM602.980	A	+		02/96 ➧	901 500 04 54+	**94225**	665 371 16	A/A
SPRINTER (95-) 413 CDI	D	OM612.981	M	+/-		04/00 ➧	901 500 04 54+	**94225**	665 371 16	A/A
SPRINTER (95-) 413 CDI	D	OM612.981	A	+/-		04/00 ➧	901 500 04 54+	**94225**	665 371 16	A/A
SPRINTER (95-) 414	G	M111.979	M	+		02/96 ➧	901 500 04 54+	**94225**	665 371 16	A/A
SPRINTER (95-) 414	G	M111.979	A	+		02/96 ➧	901 500 04 54+	**94225**	665 371 16	A/A
SPRINTER (95-) 416 CDI	D	OM612.981	M	+/-		04/00 ➧	901 500 04 54+	**94225**	665 371 16	A/A
SPRINTER (95-) 416 CDI	D	OM612.981	A	+/-		04/00 ➧	901 500 04 54+	**94225**	665 371 16	A/A
SPRINTER (95-) 616 CDI	D	OM612.981	M	+/-		04/00 ➧	901 500 04 54+	**94225**	665 371 16	A/A
SPRINTER (95-) 616 CDI	D	OM612.981	A	+/-		04/00 ➧	901 500 04 54+	**94225**	665 371 16	A/A
VANEO (02-) 1.6	G	M166.961	M/A	+/-		02/02 ➧	168 500 08 54+	**94588**	578 381 16	A/A
VANEO (02-) 1.6	G	M166.961	M/A	+/-		02/02 ➧	414 500 00 54	**94613**	540 383 16	A/A
VANEO (02-) 1.7 CDI	D	OM668.914	M/A	+/-		02/02 ➧	168 500 08 54+	**94588**	578 381 16	A/A
VANEO (02-) 1.9	G	M166.991	M/A	+/-		02/02 ➧	168 500 08 54+	**94588**	578 381 16	A/A
VIANO W 639 (03-) 2.0 CDI	D	OM646	M	+/-		09/03 ➧	639 835 00 70	**94674**	698 391 16	A/A
VIANO W 639 (03-) 2.2 CDI	D	OM646	M	+/-		09/03 ➧	639 835 00 70	**94674**	698 391 16	A/A
VIANO W 639 (03-) 3.2 i V6	G	M112	M	+/-		09/03 ➧	639 835 00 70	**94674**	698 391 16	A/A
VIANO W 639 (03-) 3.5 i V6	G	M112	M	+/-		09/03 ➧	639 835 00 70	**94674**	698 391 16	A/A
VITO W 638 (96-) 108 CDI	D	OM611.940	M	+		03/99 ➧	638 835 01 70	**94226**	540 541 16	A/A
VITO W 638 (96-) 108 CDI	D	OM611.940	A	+		03/99 ➧	638 835 01 70	**94226**	540 541 16	A/A
VITO W 638 (96-) 108 D	D	OM601.942	M/A	+		02/96 ➧ 03/99	638 835 01 70	**94226**	540 541 16	A/A
VITO W 638 (96-) 110 CDI	D	OM611.980	M	+		03/99 ➧	638 835 01 70	**94226**	540 541 16	A/A
VITO W 638 (96-) 110 CDI	D	OM611.980	A	+		03/99 ➧	638 835 01 70	**94226**	540 541 16	A/A
VITO W 638 (96-) 110 TD	D	OM601.970	M/A	+		02/96 ➧ 03/99	638 835 01 70	**94226**	540 541 16	A/A
VITO W 638 (96-) 112 CDI	D	OM611.960	M	+		03/99 ➧	638 835 01 70	**94226**	540 541 16	A/A
VITO W 638 (96-) 112 CDI	D	OM611.960	A	+		03/99 ➧	638 835 01 70	**94226**	540 541 16	A/A
VITO W 638 (96-) 113	G	M111.948	M/A	+		02/96 ➧ 03/99	638 835 01 70	**94226**	540 541 16	A/A
VITO W 638 (96-) 113	G	M111.948	M	+		03/99 ➧ 07/03	638 835 01 70	**94226**	540 541 16	A/A
VITO W 638 (96-) 113	G	M111.948	A	+/-		03/99 ➧ 07/03	638 835 01 70	**94226**	540 541 16	A/A

CONDENSERS

	G/D			AC	Note		OE	Nissens	Dim. H	W	T	Mat.
MERCEDES LIGHT VAN (../..)												
VITO W 638 (96-) 114	G	M111.978	M/A	+		02/96 ▸ 03/99	638 835 01 70	**94226**	540	541	16	A/A
VITO W 638 (96-) 114	G	M111.978	M	+		03/99 ▸ 07/03	638 835 01 70	**94226**	540	541	16	A/A
VITO W 638 (96-) 114	G	M111.978	A	+/-		03/99 ▸ 07/03	638 835 01 70	**94226**	540	541	16	A/A
VITO W 639 (03-) 2.0 CDI	D	OM646	M	+/-		09/03 ▸	639 835 00 70	**94674**	698	391	16	A/A
VITO W 639 (03-) 2.2 CDI	D	OM646	M	+/-		09/03 ▸	639 835 00 70	**94674**	698	391	16	A/A
VITO W 639 (03-) 3.2 i V6	G	M112	M	+/-		09/03 ▸	639 835 00 70	**94674**	698	391	16	A/A
MITSUBISHI LIGHT VAN												
L 200 (96-) 2.5 D	D	4D56T	M	+/-		06/96 ▸	MR146328 +	**94865**	550	330	20	A/A
L 200 (96-) 2.5 TD	D	4D56T	M	+/-		06/96 ▸	MR146328 +	**94865**	550	330	20	A/A
L 200 (96-) 2.5 TD	D	4D56T	M	+/-	4X4	07/01 ▸	MR146328 +	**94865**	550	330	20	A/A
L 300 (86-) 2.4	G	4G64	M	+/-		11/86 ▸	MB946630 +	**94493**	505	330	18	A/A
MONTERO (00-) 2.5 TD	D	4D56TDI	M/A	+/-		02/00 ▸ 06/01	MN123332 +	**94864**	0	0	0	A/A
MONTERO (00-) 2.5 TD	D	4D56TDI	M/A	+/-		07/01 ▸	MN123332 +	**94864**	0	0	0	A/A
MONTERO (00-) 3.2 DI-D	D	4M41	M	+/-		02/00 ▸	MN123332 +	**94864**	0	0	0	A/A
MONTERO (00-) 3.2 DI-D	D	4M41	A	+/-		02/00 ▸	MN123332 +	**94864**	0	0	0	A/A
MONTERO (00-) 3.5 i V6 24V	G	6G74	M/A	+/-		02/00 ▸ 09/02	MN123332 +	**94864**	0	0	0	A/A
MONTERO (00-) 3.5 i V6 24V	G	6G74	M/A	+/-		10/02 ▸	MN123332 +	**94864**	0	0	0	A/A
MONTERO SPORT (98-) 2.5 TD	D	4D56T	M/A	+/-		11/98 ▸	MR 360415	**94790**	625	360	20	A/A
MONTERO SPORT (98-) 3.0 i V6 24V	G	6G72	M/A	+/-		11/98 ▸	MR 360415	**94790**	625	360	20	A/A
PAJERO (90-) 2.4 i	G	4G64	M	+/-		12/90 ▸	MB657375 +	**94703**	650	372	22	A/A
PAJERO (90-) 2.5 TD	D	4D56T	M	+/-		07/01 ▸ 11/02	MB918436 +	**94784**	650	367	22	A/A
PAJERO (90-) 2.5 TD	D	4D56T	M	+/-		11/93 ▸ 06/01	MB918436 +	**94784**	650	367	22	A/A
PAJERO (90-) 2.5 TD	D	4D56T	M	+/-		12/90 ▸ 10/93	MB657375 +	**94703**	650	372	22	A/A
PAJERO (90-) 2.5 TD	D	4D56T	M	+/-		12/02 ▸	MB918436 +	**94784**	650	367	22	A/A
PAJERO (90-) 2.6 i 12V	G	4G54	M	+/-		08/93 ▸	MB918436 +	**94784**	650	367	22	A/A
PAJERO (90-) 2.6 i 12V	G	4G54	M	+/-		12/90 ▸ 07/93	MB657375 +	**94703**	650	372	22	A/A
PAJERO (90-) 2.8 TD	D	4M40	M	+/-	JAPAN	07/93 ▸	MR117391	**94749**	575	302	16	A/A
PAJERO (90-) 2.8 TD	D	4M40	A	+/-	JAPAN	07/93 ▸	MR117391	**94749**	575	302	16	A/A
PAJERO (90-) 2.8 TD	D	4M40T	M	+/-		07/93 ▸	MR117391	**94749**	575	302	16	A/A
PAJERO (90-) 2.8 TD	D	4M40T	A	+/-		07/93 ▸	MR117391	**94749**	575	302	16	A/A
PAJERO (90-) 3.0 i	G	6G72	M	+/-		05/94 ▸	MB918436 +	**94784**	650	367	22	A/A
PAJERO (90-) 3.0 i	G	6G72	M	+/-		12/90 ▸ 05/94	MB657375 +	**94703**	650	372	22	A/A
PAJERO (90-) 3.5 i V6 24V	G	6G74	M/A	+/-		05/94 ▸	MB918436 +	**94784**	650	367	22	A/A
PAJERO (00-) 2.5 TD	D	4D56TDI	M/A	+/-		02/00 ▸ 06/01	MN123332 +	**94864**	0	0	0	A/A
PAJERO (00-) 2.5 TD	D	4D56TDI	M/A	+/-		07/01 ▸	MN123332 +	**94864**	0	0	0	A/A
PAJERO (00-) 3.2 DI-D	D	4M41	M	+/-		02/00 ▸	MN123332 +	**94864**	0	0	0	A/A
PAJERO (00-) 3.2 DI-D	D	4M41	A	+/-		02/00 ▸	MN123332 +	**94864**	0	0	0	A/A
PAJERO (00-) 3.5 i V6 24V	G	6G74	M/A	+/-		02/00 ▸ 09/02	MN123332 +	**94864**	0	0	0	A/A
PAJERO (00-) 3.5 i V6 24V	G	6G74	M/A	+/-		10/02 ▸	MN123332 +	**94864**	0	0	0	A/A
PAJERO SPORT (98-) 2.5 TD	D	4D56T	M/A	+/-		11/98 ▸	MR 360415	**94790**	625	360	20	A/A
PAJERO SPORT (98-) 3.0 i V6 24V	G	6G72	M/A	+/-		11/98 ▸	MR 360415	**94790**	625	360	20	A/A
SHOGUN (90-) 2.4 i	G	4G64	M	+/-		12/90 ▸	MB657375 +	**94703**	650	372	22	A/A
SHOGUN (90-) 2.5 TD	D	4D56T	M	+/-		07/01 ▸ 11/02	MB918436 +	**94784**	650	367	22	A/A
SHOGUN (90-) 2.5 TD	D	4D56T	M	+/-		11/93 ▸ 06/01	MB918436 +	**94784**	650	367	22	A/A
SHOGUN (90-) 2.5 TD	D	4D56T	M	+/-		12/90 ▸ 10/93	MB657375 +	**94703**	650	372	22	A/A
SHOGUN (90-) 2.5 TD	D	4D56T	M	+/-		12/02 ▸	MB918436 +	**94784**	650	367	22	A/A
SHOGUN (90-) 2.6 i 12V	G	4G54	M	+/-		08/93 ▸	MB918436 +	**94784**	650	367	22	A/A
SHOGUN (90-) 2.6 i 12V	G	4G54	M	+/-		12/90 ▸ 07/93	MB657375 +	**94703**	650	372	22	A/A

CONDENSERS

	G/D			AC	Note		OE	Nissens	Dim. H	W	T	Mat.
MITSUBISHI LIGHT VAN (../..)												
SHOGUN (90-) 2.8 TD	D	4M40	M	+/-	JAPAN	07/93 ➧	MR117391	**94749**	575	302	16	A/A
SHOGUN (90-) 2.8 TD	D	4M40	A	+/-	JAPAN	07/93 ➧	MR117391	**94749**	575	302	16	A/A
SHOGUN (90-) 2.8 TD	D	4M40T	M	+/-		07/93 ➧	MR117391	**94749**	575	302	16	A/A
SHOGUN (90-) 2.8 TD	D	4M40T	A	+/-		07/93 ➧	MR117391	**94749**	575	302	16	A/A
SHOGUN (90-) 3.0 i	G	6G72	M	+/-		05/94 ➧	MB657375 +	**94703**	650	372	22	A/A
SHOGUN (90-) 3.0 i	G	6G72	M	+/-		12/90 ➧ 05/94	MB657375 +	**94703**	650	372	22	A/A
SHOGUN (90-) 3.5 i V6 24V	G	6G74	M/A	+/-		05/94 ➧	MB657375 +	**94703**	650	372	22	A/A
SHOGUN (00-) 2.5 TD	D	4D56TDI	M/A	+/-		02/00 ➧ 06/01	MN123332 +	**94864**	0	0	0	A/A
SHOGUN (00-) 2.5 TD	D	4D56TDI	M/A	+/-		07/01 ➧	MN123332 +	**94864**	0	0	0	A/A
SHOGUN (00-) 3.2 DI-D	D	4M41	M	+/-		02/00 ➧	MN123332 +	**94864**	0	0	0	A/A
SHOGUN (00-) 3.2 DI-D	D	4M41	A	+/-		02/00 ➧	MN123332 +	**94864**	0	0	0	A/A
SHOGUN (00-) 3.5 i V6 24V	G	6G74	M/A	+/-		02/00 ➧ 09/02	MN123332 +	**94864**	0	0	0	A/A
SHOGUN (00-) 3.5 i V6 24V	G	6G74	M/A	+/-		10/02 ➧	MN123332 +	**94864**	0	0	0	A/A
NISSAN LIGHT VAN												
ATLEON (97-) T100.35	D	BD30TI	M	+/-		01/97 ➧	92110-9X400	**94836**	364	363	32	A/A
ATLEON (97-) T100.45	D	BD30TI	M	+/-		01/97 ➧	92110-9X400	**94836**	364	363	32	A/A
ATLEON (97-) T100.56	D	BD30TI	M	+/-		01/97 ➧	92110-9X400	**94836**	364	363	32	A/A
ATLEON (97-) T135.60	G	B440TI	M	+/-		01/97 ➧	92110-9X400	**94836**	364	363	32	A/A
ATLEON (97-) T135.70	G	B440TI	M	+/-		01/97 ➧	92110-9X400	**94836**	364	363	32	A/A
ATLEON (97-) T135.80	G	B440TI	M	+/-		01/97 ➧	92110-9X400	**94836**	364	363	32	A/A
ATLEON (97-) T160.110	G	B660TIL	M	+/-		01/97 ➧	92110-9X400	**94836**	364	363	32	A/A
ATLEON (97-) T160.130	G	B660TIL	M	+/-		01/97 ➧	92110-9X400	**94836**	364	363	32	A/A
ATLEON (97-) T160.150	G	B660TIL	M	+/-		01/97 ➧	92110-9X400	**94836**	364	363	32	A/A
ATLEON (97-) T160.90	G	B660TIL	M	+/-		01/97 ➧	92110-9X400	**94836**	364	363	32	A/A
ATLEON (97-) T200.130	G	B660TIL	M	+/-		01/97 ➧	92110-9X400	**94836**	364	363	32	A/A
ECO (97-) T100.35	D	BD30TI	M	+/-		01/97 ➧	92110-9X400	**94836**	364	363	32	A/A
ECO (97-) T100.45	D	BD30TI	M	+/-		01/97 ➧	92110-9X400	**94836**	364	363	32	A/A
ECO (97-) T100.56	D	BD30TI	M	+/-		01/97 ➧	92110-9X400	**94836**	364	363	32	A/A
ECO (97-) T135.60	G	B440TI	M	+/-		01/97 ➧	92110-9X400	**94836**	364	363	32	A/A
ECO (97-) T135.70	G	B440TI	M	+/-		01/97 ➧	92110-9X400	**94836**	364	363	32	A/A
ECO (97-) T135.80	G	B440TI	M	+/-		01/97 ➧	92110-9X400	**94836**	364	363	32	A/A
ECO (97-) T160.110	G	B660TIL	M	+/-		01/97 ➧	92110-9X400	**94836**	364	363	32	A/A
ECO (97-) T160.130	G	B660TIL	M	+/-		01/97 ➧	92110-9X400	**94836**	364	363	32	A/A
ECO (97-) T160.150	G	B660TIL	M	+/-		01/97 ➧	92110-9X400	**94836**	364	363	32	A/A
ECO (97-) T160.90	G	B660TIL	M	+/-		01/97 ➧	92110-9X400	**94836**	364	363	32	A/A
ECO (97-) T200.130	G	B660TIL	M	+/-		01/97 ➧	92110-9X400	**94836**	364	363	32	A/A
INTERSTAR (02-) 1.9 dCi	D	F9Q	M	+		01/03 ➧ 11/03		**94660**	690	376	16	A/A
INTERSTAR (02-) 1.9 dCi	D	F9Q	M	+		11/03 ➧		**94659**	690	376	16	A/A
INTERSTAR (02-) 2.2 dCi	D	G9T	M	+		01/03 ➧ 11/03	77 01 049 665	**94660**	690	376	16	A/A
INTERSTAR (02-) 2.2 dCi	D	G9T	M	+		11/03 ➧		**94659**	690	376	16	A/A
INTERSTAR (02-) 2.5 dCi	D	G9U	M	+		01/03 ➧ 11/03	77 01 049 665	**94660**	690	376	16	A/A
INTERSTAR (02-) 2.5 dCi	D	G9U	M	+		11/03 ➧		**94659**	690	376	16	A/A
KING CAB D21 (85-) 1.6	G	Z16	M	+/-		08/85 ➧	92110-01G61	**94024**	640	375	22	A/A
KING CAB D21 (85-) 1.8	G	Z18	M	+/-		08/85 ➧	92110-01G61	**94024**	640	375	22	A/A
KING CAB D21 (85-) 2.0	G	Z20	M	+/-		09/85 ➧	92110-01G61	**94024**	640	375	22	A/A
KING CAB D21 (85-) 2.3 D	D	TD23	M	+/-		08/85 ➧	92110-01G61	**94024**	640	375	22	A/A
KING CAB D21 (85-) 2.4	G	Z24	M	+/-		08/85 ➧	92110-01G61	**94024**	640	375	22	A/A
KING CAB D21 (85-) 2.4	G	Z24	A	+/-		08/85 ➧	92110-01G61	**94024**	640	375	22	A/A
KING CAB D21 (85-) 2.4 i	G	Z24I	M	+/-		08/85 ➧	92110-01G61	**94024**	640	375	22	A/A

CONDENSERS

	G/D			AC	Note		OE	Nissens	Dim. H	W	T	Mat.
NISSAN LIGHT VAN (../..)												
KING CAB D21 (85-) 2.4 i 12V	G	KA24E	M	+/-		08/85 ➧	92110-01G61	**94024**	640	375	22	A/A
KING CAB D21 (85-) 2.5 D	D	SD25	M	+/-		08/85 ➧	92110-01G61	**94024**	640	375	22	A/A
KING CAB D21 (85-) 2.5 TD	D	TD25	M	+/-		09/87 ➧	92110-01G61	**94024**	640	375	22	A/A
KING CAB D21 (85-) 2.7 TDi	D	TD27T	M	+/-		09/87 ➧	92110-01G61	**94024**	640	375	22	A/A
KING CAB D21 (85-) 3.0 i V6	G	VG30E	M	+/-		08/85 ➧	92110-01G61	**94024**	640	375	22	A/A
KING CAB D21 (85-) 3.0 i V6	G	VG30E	A	+/-		08/85 ➧	92110-01G61	**94024**	640	375	22	A/A
KING CAB D22 (98-) 2.4 EGI	G	KA24DE	M	+/-	NAVARA	11/01 ➧	92110-3S401+	**94759**	680	326	17	A/A
KING CAB D22 (98-) 2.4 i 12V	G	KA24E	M	+/-	NAVARA	02/98 ➧	92110-3S401+	**94759**	680	326	17	A/A
KING CAB D22 (98-) 2.5 TD	D	TD25	M	+/-	NAVARA	02/98 ➧	92110-3S401+	**94759**	680	326	17	A/A
KUBISTAR (03-) 1.2 i	G	D7F	M	+		08/03 ➧		**94439**	550	380	19	A/A
KUBISTAR (03-) 1.2 i 16V	G	D4F	M	+		08/03 ➧		**94657**	550	380	16	A/A
KUBISTAR (03-) 1.5 dCi	D	K9K	M	+		08/03 ➧		**94657**	550	380	16	A/A
KUBISTAR (03-) 1.5 dCi	D	K9K	M	+/-		08/03 ➧		**94745**	340	504	16	A/A
KUBISTAR (03-) 1.6 i 16V	G	K4M	M	+		08/03 ➧		**94324**	510	376	16	A/A
KUBISTAR (03-) 1.9 D	D	F8Q	M	+		08/03 ➧		**94324**	510	376	16	A/A
KUBISTAR (03-) 1.9 dCi	D	F9Q	M	+/-		08/03 ➧		**94324**	510	376	16	A/A
NOTE (06-) 1.4 i 16V	G	CR14DE	M	+		01/06 ➧	92100-AX801	**94621**	0	0	0	A/A
NOTE (06-) 1.6 i 16V	G	HR16DE	M	+		01/06 ➧	92100-AX801	**94621**	0	0	0	A/A
NOTE (06-) 1.6 i 16V	G	HR16DE	A	+		01/06 ➧	92100-AX801	**94621**	0	0	0	A/A
PATHFINDER (97-) 3.3 i V6	G	VG33E	M/A	+/-		01/97 ➧	92110-0W002+	**94500**	0	0	0	A/A
PATHFINDER (97-) 3.5 i V6	G	VQ35DE	M/A	+/-		01/97 ➧	92110-0W002+	**94500**	0	0	0	A/A
PATROL (79-) 2.8	G	2.4 RB 30 S	M	+/-		11/79 ➧	92101-G9800	**94383**	692	308	27	A/A
PATROL (79-) 3.3 D	G	2.4 RB 30 S	M	+/-		11/79 ➧	92101-G9800	**94383**	692	308	27	A/A
PATROL (79-) 3.3 TD	G	2.4 RB 30 S	M	+/-		11/79 ➧	92101-G9800	**94383**	692	308	27	A/A
PATROL Y60 (88-) 2.4	G	RB	M	+/-		09/88 ➧ 11/95	92101-G9800	**94383**	692	308	27	A/A
PATROL Y60 (88-) 2.8 TD	D	RD28T	M	+/-		01/90 ➧	92101-G9800	**94383**	692	308	27	A/A
PATROL Y60 (88-) 2.8 TD	D	RD28T	M	+/-		04/90 ➧	92101-G9800	**94383**	692	308	27	A/A
PATROL Y60 (88-) 2.8 TD	D	RD28T	M	+/-		09/88 ➧ 10/91	92101-G9800	**94383**	692	308	27	A/A
PATROL Y60 (88-) 2.8 TD	D	RD28T	M	+/-		09/88 ➧ 11/95	92101-G9800	**94383**	692	308	27	A/A
PATROL Y60 (88-) 2.8 TD	D	RD28T	M	+/-		09/88 ➧ 11/98	92101-G9800	**94383**	692	308	27	A/A
PATROL Y60 (88-) 4.2 D	D	TD42	M	+/-		01/90 ➧	92101-G9800	**94383**	692	308	27	A/A
PATROL Y60 (88-) 4.2 D	D	TD42	M	+/-		04/90 ➧	92101-G9800	**94383**	692	308	27	A/A
PATROL Y60 (88-) 4.2 D	G	TD42	M	+/-		09/88 ➧ 11/95	92101-G9800	**94383**	692	308	27	A/A
PATROL Y60 (88-) 4.2 D	D	TD42	M	+/-		09/88 ➧ 11/95	92101-G9800	**94383**	692	308	27	A/A
PICK UP D21 (85-) 1.6	G	Z16	M	+/-		08/85 ➧	92110-01G61	**94024**	640	375	22	A/A
PICK UP D21 (85-) 1.8	G	Z18	M	+/-		08/85 ➧	92110-01G61	**94024**	640	375	22	A/A
PICK UP D21 (85-) 2.0	G	Z20	M	+/-		09/85 ➧	92110-01G61	**94024**	640	375	22	A/A
PICK UP D21 (85-) 2.3 D	D	TD23	M	+/-		08/85 ➧	92110-01G61	**94024**	640	375	22	A/A
PICK UP D21 (85-) 2.4	G	Z24	M	+/-		08/85 ➧	92110-01G61	**94024**	640	375	22	A/A
PICK UP D21 (85-) 2.4	G	Z24	A	+/-		08/85 ➧	92110-01G61	**94024**	640	375	22	A/A
PICK UP D21 (85-) 2.4 i	G	Z24I	M	+/-		08/85 ➧	92110-01G61	**94024**	640	375	22	A/A
PICK UP D21 (85-) 2.4 i 12V	G	KA24E	M	+/-		08/85 ➧	92110-01G61	**94024**	640	375	22	A/A
PICK UP D21 (85-) 2.5 D	D	SD25	M	+/-		08/85 ➧	92110-01G61	**94024**	640	375	22	A/A
PICK UP D21 (85-) 2.5 TD	D	TD25	M	+/-		09/87 ➧	92110-01G61	**94024**	640	375	22	A/A
PICK UP D21 (85-) 2.7 TDi	D	TD27T	M	+/-		09/87 ➧	92110-01G61	**94024**	640	375	22	A/A
PICK UP D21 (85-) 3.0 i V6	G	VG30E	M	+/-		08/85 ➧	92110-01G61	**94024**	640	375	22	A/A
PICK UP D21 (85-) 3.0 i V6	G	VG30E	A	+/-		08/85 ➧	92110-01G61	**94024**	640	375	22	A/A
PICK UP D22 (98-) 2.4 EGI	G	KA24DE	M	+/-	NAVARA	11/01 ➧	92110-3S401+	**94759**	680	326	17	A/A
PICK UP D22 (98-) 2.4 i 12V	G	KA24E	M	+/-	NAVARA	02/98 ➧	92110-3S401+	**94759**	680	326	17	A/A

CONDENSERS

	G/D			AC	Note		OE	Nissens	Dim. H W T	Mat.
NISSAN LIGHT VAN (../..)										
PICK UP D22 (98-) 2.5 TD	D	TD25	M	+/-	NAVARA	02/98 ➧	92110-3S401+	**94759**	680 326 17	A/A
PRIMASTAR (02-) 1.9 dCi	D		M	+		07/02 ➧	+	**94671**	574 437 16	A/A
PRIMASTAR (02-) 1.9 dCi	D		M	+		07/02 ➧	27650-00QAH	**94672**	574 437 16	A/A
PRIMASTAR (02-) 2.0 i 16V	D		M	+/-		07/02 ➧	+	**94671**	574 437 16	A/A
PRIMASTAR (02-) 2.5 dCi	D		M	+		07/02 ➧		**94678**	740 391 16	A/A
TERRANO (86-) 2.4 i	G	Z24I	M	+/-		08/85 ➧	92110-01G61	**94024**	640 375 22	A/A
TERRANO (87-) 2.7 TDi	D	TD27T	M	+/-		09/87 ➧	92110-01G61	**94024**	640 375 22	A/A
TERRANO (87-) 3.0 i V6	G	VG30E	M	+/-		08/85 ➧	92110-01G61	**94024**	640 375 22	A/A
TERRANO (87-) 3.0 i V6	G	VG30E	A	+/-		08/85 ➧	92110-01G61	**94024**	640 375 22	A/A
TERRANO (93-) 2.4 i 12V	G	KA24E	M	+/-		01/93 ➧	92110-7F000+	**94501**	635 372 18	A/A
TERRANO (93-) 2.7 TD	D	TD27T	M	+/-		01/93 ➧	92110-7F000+	**94501**	635 372 18	A/A
TERRANO (96-) 2.4 i 12V	G	KA24E	M	+/-		01/96 ➧	1956440 +	**94501**	635 372 18	A/A
TERRANO (96-) 2.4 i 12V	G	KA24E	M	+/-		01/96 ➧	1961628 +	**94863**	640 345 20	A/A
TERRANO (96-) 2.7 TDi	D	TD27TI	M	+/-		05/96 ➧	92110-0F700+	**94863**	640 345 20	A/A
TERRANO (96-) 2.7 TDi	D	TD27TI	A	+/-		05/96 ➧	92110-0F700+	**94863**	640 345 20	A/A
TERRANO (02-) 2.4 i 12V	G	KA24E	M	+/-		02/02 ➧	92110-0F700	**94863**	640 345 20	A/A
VANETTE CARGO (95-) 2.0 D	D	LD20	M	+/-		01/95 ➧	92110-8C802	**94786**	630 350 19	A/A
VANETTE CARGO (95-) 2.0 D	D	LD20	M	+/-		01/95 ➧	92110-8C802	**94786**	630 350 19	A/A
VANETTE CARGO (95-) 2.3 D	D	LD23	M	+/-		01/95 ➧	92110-8C802	**94786**	630 350 19	A/A
VANETTE CARGO (95-) 2.3 D	D	LD23	M	+/-		01/95 ➧	92110-8C802	**94786**	630 350 19	A/A
VANETTE CARGO (95-) 2.3 D	D	LD23	M	+/-		09/94 ➧ 06/96	92110-8C802	**94786**	630 350 19	A/A
OLDSMOBILE LIGHT VAN										
SILHOUETTE (89-) 3.1	G		A	+/-		09/89 ➧	52453114 +	**94393**	686 380 35	A/A
SILHOUETTE (89-) 3.1	G		A	+/-		09/89 ➧	52461229	**94394**	655 385 25	A/A
SILHOUETTE (89-) 3.4	G		A	+/-		09/89 ➧	52453114 +	**94393**	686 380 35	A/A
SILHOUETTE (89-) 3.8	G		A	+/-		01/92 ➧ /95	52453114 +	**94393**	686 380 35	A/A
SILHOUETTE (97-) 3.4	G		A	+/-		01/97 ➧ 12/97	52477673 +	**94843**	743 408 25	A/A
SILHOUETTE (97-) 3.4	G		A	+/-		01/98 ➧ 12/99	52477673 +	**94843**	743 408 25	A/A
SILHOUETTE (97-) 3.4	G		A	+/-		01/00 ➧ 12/00	52477673 +	**94843**	743 408 25	A/A
SILHOUETTE (97-) 3.4	G		A	+/-		01/01 ➧	10326292 +	**94797**	735 370 22	A/A
OPEL LIGHT VAN										
ARENA (98-) 1.9 dCi	D	F9Q	M	+		01/98 ➧ 06/01	4401424	**94326**	730 381 16	A/A
ARENA (98-) 1.9 dCi	D	F9Q	M	+		01/03 ➧ 11/03	4403 238 +	**94660**	690 376 16	A/A
ARENA (98-) 1.9 dCi	D	F9Q	M	+		11/03 ➧	4415071	**94659**	690 376 16	A/A
ARENA (98-) 2.2 dCi	D	G9T	M	+		01/98 ➧ 06/01	4401424	**94326**	730 381 16	A/A
ARENA (98-) 2.2 dCi	D	G9T	M	+		01/03 ➧ 11/03	4403 238 +	**94660**	690 376 16	A/A
ARENA (98-) 2.2 dCi	D	G9T	M	+		11/03 ➧	4415071	**94659**	690 376 16	A/A
ARENA (98-) 2.2 dTi	D	G9T	M	+		01/98 ➧ 06/01	4401424	**94326**	730 381 16	A/A
ARENA (98-) 2.2 dTi	D	G9T	M	+		01/03 ➧ 11/03	4403 238 +	**94660**	690 376 16	A/A
ARENA (98-) 2.5 D	D	S8U	M	-		10/98 ➧	4400908	**94325**	730 381 16	A/A
ARENA (98-) 2.5 dCi	D	G9U	M	+		01/98 ➧ 06/01	4401424	**94326**	730 381 16	A/A
ARENA (98-) 2.5 dCi	D	G9U	M	+		01/03 ➧ 11/03	4403 238 +	**94660**	690 376 16	A/A
ARENA (98-) 2.5 dCi	D	G9U	M	+		11/03 ➧	4415071	**94659**	690 376 16	A/A
ARENA (98-) 2.8 dTi	D	S9W	M	+		10/98 ➧ 01/03	4401424	**94326**	730 381 16	A/A
COMBO (93-) 1.2 i	G	C12NZ	M	+		03/93 ➧ 09/00	1618 046 +	**94228**	600 305 20	A/A
COMBO (93-) 1.2 i	G	X12SZ	M	+		03/93 ➧ 09/00	1618 016 +	**94228**	600 305 20	A/A

CONDENSERS

	G/D			AC	Note		OE		Nissens	Dim. H W T	Mat.
OPEL LIGHT VAN (../..)											
COMBO (93-) 1.4 i	G	C14NZ	M	+		03/93 ➧ 09/00	1618 046	+	**94228**	600 305 20	A/A
COMBO (93-) 1.4 i	G	X14SZ	M	+		03/93 ➧ 09/00	1618 016	+	**94228**	600 305 20	A/A
COMBO (93-) 1.4 i 16V	G	X14XE	M	+		03/93 ➧ 09/00	1618 046	+	**94228**	600 305 20	A/A
COMBO (93-) 1.7 D	D	17D	M	+/-		03/96 ➧ 09/00	1618 046	+	**94228**	600 305 20	A/A
COMBO (93-) 1.7 D	D	X17D	M	+/-		03/96 ➧ 09/00	1618 046	+	**94228**	600 305 20	A/A
COMBO (00-) 1.2 i 16V	G	Z12XE	M	+/-		09/00 ➧	1850 000	+	**94546**	555 380 16	A/A
COMBO (00-) 1.2 i 16V	G	Z12XE	M	+/-		09/00 ➧	1850 092	+	**94721**	555 380 16	A/A
COMBO (00-) 1.3 DTi	D	Y13DT	M	+		10/04 ➧	1850 093		**94722**	555 260 16	A/A
COMBO (00-) 1.3 DTi	D	Z13DT	M	+		10/04 ➧	1850 093		**94722**	555 260 16	A/A
COMBO (00-) 1.4 i 16V	G	Z14XE	M	+/-		09/00 ➧	1850 000	+	**94546**	555 380 16	A/A
COMBO (00-) 1.7 DTi	D	Y17DT	M	+/-		09/00 ➧	1850 072	+	**94547**	555 260 16	A/A
COMBO (00-) 1.7 DTi	D	Y17DT	M	+/-		09/00 ➧	1850 089		**94548**	555 260 16	A/A
COMBO (00-) 1.7 DTi	D	Y17DTL	M	+/-		09/00 ➧	1850 072	+	**94547**	555 260 16	A/A
COMBO (00-) 1.7 DTi	D	Z17DTH	M	+/-		09/00 ➧	1850 093		**94722**	555 260 16	A/A
FRONTERA A (92-) 2.0 i	G	X20SE	M	+/-		10/94 ➧ 08/98	1850 026		**94819**	540 280 20	A/A
FRONTERA A (92-) 2.2 i 16V	G	X22XE	M	+/-		10/94 ➧ 08/98	1850 026		**94819**	540 280 20	A/A
FRONTERA A (92-) 2.5 TDS	D		M	+/-		07/96 ➧ 09/98	1850 026		**94819**	540 280 20	A/A
FRONTERA A (92-) 2.8 TD	D	28TD	M	+/-		10/94 ➧ 09/98	1850 026		**94819**	540 280 20	A/A
FRONTERA B (98-) 2.2 i 16V	G	X22SE	M	+/-		06/99 ➧	1850 031		**94686**	575 308 20	A/A
FRONTERA B (98-) 2.2 i 16V	G	Y22SE	M	+/-		06/99 ➧	1850 031		**94686**	575 308 20	A/A
FRONTERA B (98-) 2.2 TD	D	X22DTH	M/A	+/-		06/99 ➧	1850 031		**94686**	575 308 20	A/A
FRONTERA B (98-) 2.2 TD	D	Y22DTH	M/A	+/-		06/99 ➧	1850 031		**94686**	575 308 20	A/A
FRONTERA B (98-) 3.2 i V6 24V	G	Y32SE	M	+/-		06/99 ➧	1850 031		**94686**	575 308 20	A/A
FRONTERA B (98-) 3.2 i V6 24V	G	Y32SE	A	+/-		06/99 ➧	1850 031		**94686**	575 308 20	A/A
MOVANO (98-) 1.9 dCi	D	F9Q	M	+		01/98 ➧ 06/01	4401424		**94326**	730 381 16	A/A
MOVANO (98-) 1.9 dCi	D	F9Q	M	+		01/03 ➧ 11/03	4403 238	+	**94660**	690 376 16	A/A
MOVANO (98-) 1.9 dCi	D	F9Q	M	+		11/03 ➧	4415071		**94659**	690 376 16	A/A
MOVANO (98-) 2.2 dCi	D	G9T	M	+		01/98 ➧ 06/01	4401424		**94326**	730 381 16	A/A
MOVANO (98-) 2.2 dCi	D	G9T	M	+		01/03 ➧ 11/03	4403 238	+	**94660**	690 376 16	A/A
MOVANO (98-) 2.2 dCi	D	G9T	M	+		11/03 ➧	4415071		**94659**	690 376 16	A/A
MOVANO (98-) 2.2 dTi	D	G9T	M	+		01/98 ➧ 06/01	4401424		**94326**	730 381 16	A/A
MOVANO (98-) 2.2 dTi	D	G9T	M	+		01/03 ➧ 11/03	4403 238	+	**94660**	690 376 16	A/A
MOVANO (98-) 2.5 D	D	S8U	M	-		10/98 ➧	4400908		**94325**	730 381 16	A/A
MOVANO (98-) 2.5 dCi	D	G9U	M	+		01/98 ➧ 06/01	4401424		**94326**	730 381 16	A/A
MOVANO (98-) 2.5 dCi	D	G9U	M	+		01/03 ➧ 11/03	4403 238	+	**94660**	690 376 16	A/A
MOVANO (98-) 2.5 dCi	D	G9U	M	+		11/03 ➧	4415071		**94659**	690 376 16	A/A
MOVANO (98-) 2.8 dTi	D	S9W	M	+		10/98 ➧ 01/03	4401424		**94326**	730 381 16	A/A
VIVARO (01-) 1.9 dTi	D	F9Q	M	+		05/01 ➧	4408429	+	**94671**	574 437 16	A/A
VIVARO (01-) 1.9 dTi	D	F9Q	M	+		05/01 ➧	4414387	+	**94672**	574 437 16	A/A
VIVARO (01-) 2.0 i 16V	G	F4R	M	+/-		05/01 ➧	4408429	+	**94671**	574 437 16	A/A
VIVARO (01-) 2.5 dTi	D	G9U	M	+		05/01 ➧	4414580		**94678**	740 391 16	A/A
PEUGEOT LIGHT VAN											
BOXER (94-) 1.9 D	D	XUD9AU	M	+/-		02/94 ➧ 01/02	6455.T3		**94700**	506 349 22	A/A
BOXER (94-) 1.9 TD	D	XUD9UTF	M	+/-		02/94 ➧ 01/02	6455.T3		**94700**	506 349 22	A/A
BOXER (94-) 2.0	G	XU102C	M	+/-	TROPIC	02/94 ➧ 01/02	6455.T3		**94700**	506 349 22	A/A
BOXER (94-) 2.0	G	XU10J2U	M	+		02/94 ➧ 01/02	6455.T3		**94700**	506 349 22	A/A
BOXER (94-) 2.5 D	D	DJ5	M	+		02/94 ➧ 01/02	6455.T3		**94700**	506 349 22	A/A
BOXER (94-) 2.5 TD	D	DJ5T	M	+		02/94 ➧ 01/02	6455.T3		**94700**	506 349 22	A/A
BOXER (94-) 2.8 D	D	SOFIM	M	+/-		02/94 ➧ 01/02	6455.T3		**94700**	506 349 22	A/A

CONDENSERS

	G/D			AC	Note		OE		Nissens	Dim. H	W	T	Mat.
PEUGEOT LIGHT VAN (../..)													
BOXER (94-) 2.8 HDi	D	8140-43	M	+/-		02/94 ➧ 01/02	6455.T3		**94700**	506	349	22	A/A
BOXER (94-) 2.8 TD	D	8140-43/63	M	+/-		02/94 ➧ 01/02	6455.T3		**94700**	506	349	22	A/A
E7 - EUROCAB 2.0 HDi	D	DW10BTED	M	+/-		01/01 ➧	6455.Q6		**94210**	725	451	16	A/A
EXPERT (95-) 1.6 i	G	SPI	M	+		10/95 ➧	6455.Q6		**94210**	725	451	16	A/A
EXPERT (95-) 1.8 i	G	XU7JP	M	+		07/96 ➧	6455.Q6		**94210**	725	451	16	A/A
EXPERT (95-) 1.9 D	D	DW8	M	+		05/98 ➧	6455.Q6		**94210**	725	451	16	A/A
EXPERT (95-) 1.9 D	D	XUD9A	M	+		10/95 ➧	6455.Q6		**94210**	725	451	16	A/A
EXPERT (95-) 1.9 TD	D	XUDTE	M	+/-		10/95 ➧	6455.Q6		**94210**	725	451	16	A/A
EXPERT (95-) 2.0 HDi	D	DW10ATED	M	+/-		09/00 ➧	6455.Q6		**94210**	725	451	16	A/A
EXPERT (95-) 2.0 i 16V	G	EW10J4	M	+		09/00 ➧	6455.Q6		**94210**	725	451	16	A/A
EXPERT (95-) 2.1 TD	D	XUD11ATE	M	+/-		10/95 ➧	6455.Q6		**94210**	725	451	16	A/A
PARTNER (96-) 1.1 i	G	TU1M	M	+		07/96 ➧	6455.AV	+	**94313**	580	341	16	A/A
PARTNER (96-) 1.1 i	G	TU1M	M	+		07/96 ➧	6455.Q9	+	**94200**	605	341	16	A/A
PARTNER (96-) 1.4 i	G	TU3JP	M	+/-		07/96 ➧ 10/98	6455.Q9		**94200**	605	341	16	A/A
PARTNER (96-) 1.4 i	G	TU3JP	M	+/-		11/98 ➧	6455.AV	+	**94313**	580	341	16	A/A
PARTNER (96-) 1.6 i	G	TU5JP	M	+/-		07/96 ➧	6455.AV	+	**94313**	580	341	16	A/A
PARTNER (96-) 1.6 i 16V	G	TU5JP4	M	+/-		11/98 ➧	6455.AV	+	**94313**	580	341	16	A/A
PARTNER (96-) 1.8 D	D	XUD7	M	+		06/96 ➧ 10/98	6455.V8		**94218**	668	341	16	A/A
PARTNER (96-) 1.8 D	D	XUD7	M	+		10/98 ➧	6455.W4	+	**94276**	668	341	16	A/A
PARTNER (96-) 1.8 i	G	XU7JB	M	+/-		07/97 ➧ 10/98	6455.Q9		**94200**	605	341	16	A/A
PARTNER (96-) 1.8 i	G	XU7JB	M	+/-		11/98 ➧	6455.AV	+	**94313**	580	341	16	A/A
PARTNER (96-) 1.9 D	D	XUD9,DW8, DW8B	M	+		06/96 ➧ 10/98	6455.V8		**94218**	668	341	16	A/A
PARTNER (96-) 1.9 D	D	XUD9,DW8, DW8B	M	+		11/98 ➧	6455.W4	+	**94276**	668	341	16	A/A
PARTNER (96-) 2.0 HDi	D	DW10TD	M	+/-		01/00 ➧	6455.W4	+	**94276**	668	341	16	A/A
PARTNER (02-) 1.1 i	G	TU1JP	M	+/-		11/02 ➧	6455.AT	+	**94542**	560	361	16	A/A
PARTNER (02-) 1.1 i	G	TU1JP	M	+/-		11/02 ➧	6455.AT	+	**94542**	560	361	16	A/A
PARTNER (02-) 1.4 i	G	TU3JP	M	+/-		11/02 ➧	6455.AT	+	**94542**	560	361	16	A/A
PARTNER (02-) 1.4 i	G	TU3JP	M	+/-		11/02 ➧	6455.AT	+	**94542**	560	361	16	A/A
PARTNER (02-) 1.6 HDI	D	DV6B	M	+/-		11/02 ➧	6455.AT	+	**94542**	560	361	16	A/A
PARTNER (02-) 1.6 HDI 16V	D	DV6TED4	M	+/-		11/02 ➧	6455.AT	+	**94542**	560	361	16	A/A
PARTNER (02-) 1.6 i 16V	G	TU5JP4	M	+/-		11/02 ➧	6455.AT	+	**94542**	560	361	16	A/A
PARTNER (02-) 1.6 i 16V	G	TU5JP4	M	+/-		11/02 ➧	6455.AT	+	**94542**	560	361	16	A/A
PARTNER (02-) 1.9 D	D	DW8B	M	+/-		11/02 ➧	6455.AT	+	**94542**	560	361	16	A/A
PARTNER (02-) 2.0 HDi	D	DW10TD	M	+/-		11/02 ➧	6455.AT	+	**94542**	560	361	16	A/A
PONTIAC LIGHT VAN													
G6 (05-) 1.9 CDTi	D		M	+/-		01/05 ➧	13114943	+	**94611**	619	417	16	A/A
G6 (05-) 1.9 CDTi	D		A	+/-		01/05 ➧	13114943	+	**94611**	619	417	16	A/A
G6 (05-) 2.0 i 16V TURBO	G		M	+/-		01/05 ➧	12793295		**94676**	625	412	16	A/A
G6 (05-) 2.0 i 16V TURBO	G		A	+/-		01/05 ➧	12793296		**94675**	625	412	16	A/A
MONTANA (89-) 3.1	G		A	+/-		09/89 ➧	52453114	+	**94393**	686	380	35	A/A
MONTANA (89-) 3.1	G		A	+/-		09/89 ➧	52461229		**94394**	655	385	25	A/A
MONTANA (89-) 3.4	G		A	+/-		09/89 ➧	52453114	+	**94393**	686	380	35	A/A
MONTANA (89-) 3.8	G		A	+/-		09/89 ➧	52453114	+	**94393**	686	380	35	A/A
MONTANA (97-) 3.4	G		A	+/-		01/97 ➧ 12/97	52477673	+	**94843**	743	408	25	A/A
MONTANA (97-) 3.4	G		A	+/-		01/98 ➧ 12/99	52477673	+	**94843**	743	408	25	A/A
MONTANA (97-) 3.4	G		A	+/-		01/00 ➧ 12/00	52477673	+	**94843**	743	408	25	A/A
MONTANA (97-) 3.4	G		A	+/-		01/01 ➧	10326292	+	**94797**	735	370	22	A/A
TRANS SPORT (89-) 3.1	G		A	+/-		09/89 ➧	52453114	+	**94393**	686	380	35	A/A

CONDENSERS

	G/D			AC	Note		OE	Nissens	Dim. H W T	Mat.
PONTIAC LIGHT VAN (../..)										
TRANS SPORT (89-) 3.1	G		A	+/-		09/89 ➧	52461229	**94394**	655 385 25	A/A
TRANS SPORT (89-) 3.4	G		A	+/-		09/89 ➧	52453114 +	**94393**	686 380 35	A/A
TRANS SPORT (89-) 3.8	G		A	+/-		01/92 ➧ /95	52453114 +	**94393**	686 380 35	A/A
TRANS SPORT (97-) 3.4	G		A	+/-		01/97 ➧ 12/97	52477673 +	**94843**	743 408 25	A/A
TRANS SPORT (97-) 3.4	G		A	+/-		01/98 ➧ 12/99	52477673 +	**94843**	743 408 25	A/A
TRANS SPORT (97-) 3.4	G		A	+/-		01/00 ➧ 12/00	52477673 +	**94843**	743 408 25	A/A
TRANS SPORT (97-) 3.4	G		A	+/-		01/01 ➧	10326292 +	**94797**	735 370 22	A/A
VENTURE (89-) 3.1	G		A	+/-		09/89 ➧	52453114 +	**94393**	686 380 35	A/A
VENTURE (89-) 3.1	G		A	+/-		09/89 ➧	52461229	**94394**	655 385 25	A/A
VENTURE (89-) 3.4	G		A	+/-		09/89 ➧	52453114 +	**94393**	686 380 35	A/A
VENTURE (89-) 3.8	G		A	+/-		09/89 ➧	52453114 +	**94393**	686 380 35	A/A
VENTURE (97-) 3.4	G		A	+/-		01/97 ➧ 12/97	52477673 +	**94843**	743 408 25	A/A
VENTURE (97-) 3.4	G		A	+/-		01/98 ➧ 12/99	52477673 +	**94843**	743 408 25	A/A
VENTURE (97-) 3.4	G		A	+/-		01/00 ➧ 12/00	52477673 +	**94843**	743 408 25	A/A
VENTURE (97-) 3.4	G		A	+/-		01/01 ➧	10326292 +	**94797**	735 370 22	A/A
RENAULT LIGHT VAN										
EXPRESS (91-) 1.4	G	E6J	M	+		09/91 ➧	77 00 825 300+	**94132**	405 393 25	A/A
EXPRESS (91-) 1.4	G	E6J	M	+		09/91 ➧	77 00 272 616	**94243**	405 375 25	A/A
EXPRESS (91-) 1.4 i	G	E7J	M	+		09/91 ➧	77 00 825 300+	**94132**	405 393 25	A/A
EXTRA (91-) 1.4	G	E6J	M	+		09/91 ➧	77 00 825 300+	**94132**	405 393 25	A/A
EXTRA (91-) 1.4	G	E6J	M	+		09/91 ➧	77 00 272 616	**94243**	405 375 25	A/A
EXTRA (91-) 1.4 i	G	E7J	M	+		09/91 ➧	77 00 825 300+	**94132**	405 393 25	A/A
KANGOO (98-) 1.2 i	G	D7F	M	+		01/98 ➧	77 00 428 083+	**94439**	550 380 19	A/A
KANGOO (98-) 1.2 i 16V	G	D4D	M	+		01/98 ➧	77 00 428 083+	**94439**	550 380 19	A/A
KANGOO (98-) 1.2 i 16V	G	D4F	M	+		01/98 ➧ 02/03	77 00 428 083+	**94439**	550 380 19	A/A
KANGOO (98-) 1.2 i 16V	G	D4F	M	+		03/03 ➧	82 00 221 131+	**94657**	550 380 16	A/A
KANGOO (98-) 1.4 i	G	E7J	M	+		01/98 ➧	77 00 301 253	**94324**	510 376 16	A/A
KANGOO (98-) 1.5 dCi	D	K9K	M	+		03/03 ➧ 12/03	82 00 221 132	**94657**	550 380 16	A/A
KANGOO (98-) 1.5 dCi	D	K9K	M	+		09/02 ➧ 03/03	77 00 428 083	**94439**	550 380 19	A/A
KANGOO (98-) 1.5 dCi	D	K9K	M	+		10/01 ➧ 09/02	77 00 428 083	**94439**	550 380 19	A/A
KANGOO (98-) 1.5 dCi	D	K9K	M	+/-		10/01 ➧	82 00 137 650	**94745**	340 504 16	A/A
KANGOO (98-) 1.6 i	D	K7M	M	+/-		12/99 ➧	77 00 301 253	**94324**	510 376 16	A/A
KANGOO (98-) 1.6 i 16V	G	K4M	M/A	+		01/02 ➧	77 00 428 083	**94439**	550 380 19	A/A
KANGOO (98-) 1.9 D	D	F8Q	M	+		09/97 ➧	77 00 301 253	**94324**	510 376 16	A/A
KANGOO (98-) 1.9 dCi	D	F9Q	M	+/-		01/02 ➧	77 00 301 253	**94324**	510 376 16	A/A
KANGOO (98-) 1.9 dTi	G	F9Q	M	+		12/99 ➧ 03/00	77 00 301 253	**94324**	510 376 16	A/A
MASTER (98-) 1.9 dCi	D	F9Q	M	+		01/98 ➧ 06/01	77 01 044 407	**94326**	730 381 16	A/A
MASTER (98-) 1.9 dCi	D	F9Q	M	+		01/03 ➧ 11/03	77 01 049 665	**94660**	690 376 16	A/A
MASTER (98-) 1.9 dCi	D	F9Q	M	+		11/03 ➧	77 01 057 122	**94659**	690 376 16	A/A
MASTER (98-) 2.2 dCi	D	G9T	M	+		01/03 ➧ 11/03	77 01 049 665	**94660**	690 376 16	A/A
MASTER (98-) 2.2 dCi	D	G9T	M	+		11/03 ➧	77 01 057 122	**94659**	690 376 16	A/A
MASTER (98-) 2.2 dTi	D	G9T	M	+		01/98 ➧ 06/01	77 01 044 407	**94326**	730 381 16	A/A
MASTER (98-) 2.2 dTi	D	G9T	M	+		01/03 ➧ 11/03	77 01 049 665	**94660**	690 376 16	A/A
MASTER (98-) 2.5 D	D	S8U	M	+/-		09/97 ➧	77 01 044 406	**94325**	730 381 16	A/A
MASTER (98-) 2.5 dCi	D	G9U	M	+		01/03 ➧ 11/03	77 01 049 665	**94660**	690 376 16	A/A
MASTER (98-) 2.5 dCi	D	G9U	M	+		07/98 ➧ 06/01	77 01 044 407	**94326**	730 381 16	A/A
MASTER (98-) 2.5 dCi	D	G9U	M	+		11/03 ➧	77 01 057 122	**94659**	690 376 16	A/A
MASTER (98-) 2.8 dTi	D	S9W	M	+		09/98 ➧ 01/03	77 01 044 407	**94326**	730 381 16	A/A

CONDENSERS

	G/D			AC	Note		OE	Nissens	Dim. H W T	Mat.
RENAULT LIGHT VAN (../..)										
RAPID (91-) 1.4	G	E6J	M	+		09/91 ➧	77 00 825 300+	**94132**	405 393 25	A/A
RAPID (91-) 1.4	G	E6J	M	+		09/91 ➧	77 00 272 616	**94243**	405 375 25	A/A
RAPID (91-) 1.4 i	G	E7J	M	+		09/91 ➧	77 00 825 300+	**94132**	405 393 25	A/A
TRAFIC (01-) 1.9 dCi	D	F9Q	M	+		04/01 ➧	77 00 312 901+	**94671**	574 437 16	A/A
TRAFIC (01-) 1.9 dCi	D	F9Q	M	+		04/01 ➧	82 00 073 912	**94672**	574 437 16	A/A
TRAFIC (01-) 1.9 dCi	D	F9Q	M	+		04/01 ➧	77 00 312 901+	**94671**	574 437 16	A/A
TRAFIC (01-) 2.0 i 16V	G	F4R	M	+/-		04/01 ➧	77 00 312 901+	**94671**	574 437 16	A/A
TRAFIC (01-) 2.5 dCi	D	G9U	M	+		09/02 ➧	82 00 019 382	**94678**	740 391 16	A/A
SEAT LIGHT VAN										
INCA (95-) 1.4 i	G	AEX	M	+		11/95 ➧ 12/97	6K0.820.413 B	**94204**	548 360 16	A/A
INCA (95-) 1.4 i	G	AKV	M	+		12/97 ➧ 09/00	6K0.820.413 B	**94204**	548 360 16	A/A
INCA (95-) 1.4 i	G	APQ	M	+		12/97 ➧ 06/03	6K0.820.413 B	**94204**	548 360 16	A/A
INCA (95-) 1.4 i	G	AUD	M	+/-		09/00 ➧ 06/03	6K0.820.413 B	**94204**	548 360 16	A/A
INCA (95-) 1.4 i 16V	G	AUA	M	+/-		09/00 ➧ 06/03	6K0.820.413 B	**94204**	548 360 16	A/A
INCA (95-) 1.6 i	G	1F	M	+		11/95 ➧ 05/97	6K0.820.413 B	**94204**	548 360 16	A/A
INCA (95-) 1.6 i	G	AEE	M	+		06/97 ➧ 09/00	6K0.820.413 B	**94204**	548 360 16	A/A
INCA (95-) 1.7 SDi	D	AHB	M	+		07/96 ➧ 09/00	6K0.820.413 B	**94204**	548 360 16	A/A
INCA (95-) 1.9 D	D	1Y	M	+		11/95 ➧ 06/03	6K0.820.413 B	**94204**	548 360 16	A/A
INCA (95-) 1.9 Sdi	D	AEY	M	+		11/95 ➧ 09/00	6K0.820.413 B	**94204**	548 360 16	A/A
INCA (95-) 1.9 Sdi	D	AYQ	M	+/-		09/00 ➧ 06/03	6K0.820.413 B	**94204**	548 360 16	A/A
INCA (95-) 1.9 Sdi	D	AYQ	M	+/-		09/00 ➧ 06/03	6K0.820.413 B	**94204**	548 360 16	A/A
TOYOTA LIGHT VAN										
4 RUNNER (85-) 2.4 i	G	22RE	M	+/-	RN 13#	08/88 ➧ 01/95	88460-35080+	**94513**	505 370 32	A/A
4 RUNNER (85-) 3.0 i	G	3VZE	M	+/-	VZN 13#	08/88 ➧ 08/89	88460-35080+	**94513**	505 370 32	A/A
4 RUNNER (85-) 3.0 i	G	3VZE	M	+/-	VZN 13#	08/89 ➧ 11/95	88460-35080+	**94513**	505 370 32	A/A
4 RUNNER (95-) 2.7 i	G	3RZFE	M	+/-	RZN 18#	11/95 ➧ 08/00	88461-35050	**94512**	563 483 20	A/A
4 RUNNER (95-) 2.7 i	G	3RZFE	A	+/-	RZN 18#	11/95 ➧ 08/00	88461-35050	**94512**	563 483 20	A/A
4 RUNNER (95-) 3.4 i	G	5VZFE	M	+/-	VZN 18#	11/95 ➧ 08/00	88461-35050	**94512**	563 483 20	A/A
4 RUNNER (95-) 3.4 i	G	5VZFE	A	+/-	VZN 18#	11/95 ➧ 08/00	88461-35050	**94512**	563 483 20	A/A
HI-ACE (95-) 2.4 D	D	2L	M	+/-	LXH 1#	08/95 ➧ 08/01	88460-26330	**94787**	645 448 16	A/A
HI-ACE (95-) 2.4 D	D	2L	M	+/-	LXH 2#	08/95 ➧ 08/01	88460-26330	**94787**	645 448 16	A/A
HI-ACE (95-) 2.4 i	G	2RZE	M	+/-	RCH 1#	08/95 ➧ 08/01	88460-26330	**94787**	645 448 16	A/A
HI-ACE (95-) 2.4 i	G	2RZE	M	+/-	RCH 2#	08/95 ➧ 08/01	88460-26330	**94787**	645 448 16	A/A
HI-ACE (95-) 2.4 TD	D	2LT	M	+/-	LXH 1#	08/95 ➧ 08/01	88460-26330	**94787**	645 448 16	A/A
HI-ACE (95-) 2.4 TD	D	2LT	M	+/-	LXH 2#	08/95 ➧ 08/01	88460-26330	**94787**	645 448 16	A/A
HI-ACE (95-) 2.7 i	G	3RZFE	M	+/-	RCH 1#	08/95 ➧ 08/01	88460-26330	**94787**	645 448 16	A/A
HI-ACE (95-) 2.7 i	G	3RZFE	M	+/-	RCH 2#	08/95 ➧ 08/01	88460-26330	**94787**	645 448 16	A/A
HI-ACE (95-) 3.0 i	G	1KZTE	M/A	+/-		08/95 ➧ 08/01	88460-26330	**94787**	645 448 16	A/A
HI-ACE (01-) 2.5 TD	D	2KDFTV	M	+/-	KLH 1#	08/01 ➧	88460-26330	**94787**	645 448 16	A/A
HI-ACE (01-) 2.5 TD	D	2KDFTV	M	+/-	KLH 2#	08/01 ➧	88460-26330	**94787**	645 448 16	A/A
HI-LUX (88-)				+	KZN 13#	08/93 ➧ 11/95	88460-35080+	**94513**	505 370 32	A/A
HI-LUX (88-) 2.2	G	4Y	M	+/-	YN 11#	08/88 ➧ 08/94	88460-04030+	**94396**	588 274 25	A/A
HI-LUX (88-) 2.2	G	4Y	M	+/-	YN 11#	08/88 ➧ 08/94	88460-35020+	**94029**	540 272 25	A/A
HI-LUX (88-) 2.4 D	D	2L	M	+/-	LN 8#	01/89 ➧ 04/96	88460-04030+	**94396**	588 274 25	A/A
HI-LUX (88-) 2.4 D	D	2L	M	+/-	LN 9#	08/88 ➧ 04/96	88460-04030+	**94396**	588 274 25	A/A
HI-LUX (88-) 2.4 D	D	2L	M	+/-	LN 10#	08/88 ➧ 04/96	88460-04030+	**94396**	588 274 25	A/A
HI-LUX (88-) 2.4 D	D	2L	M	+/-	LN 11#	08/88 ➧ 04/96	88460-04030+	**94396**	588 274 25	A/A
HI-LUX (88-) 2.8 D	D	3L	M	+/-	LN 8#	08/88 ➧ 04/96	88460-04030+	**94396**	588 274 25	A/A

CONDENSERS

	G/D			AC	Note		OE	Nissens	Dim. H	W	T	Mat.
TOYOTA LIGHT VAN (../..)												
HI-LUX (88-) 2.8 D	D	3L	M	+/-	LN 9#	08/88 ▸ 04/96	+	**94029**	540	272	25	A/A
HI-LUX (88-) 2.8 D	D	3L	M	+/-	LN 13#	08/88 ▸ 04/96	88460-35080+	**94513**	505	370	32	A/A
HI-LUX (88-) 2.8 D	D	3L	M	+/-	LN 11#	08/88 ▸ 08/89	88460-04030+	**94396**	588	274	25	A/A
HI-LUX (88-) 2.8 D	D	3L	M	+/-	LN 10#	08/88 ▸ 08/90	88460-04030+	**94396**	588	274	25	A/A
HI-LUX (88-) 3.0 i	G	3VZE	M	+/-	VZN 13#	08/89 ▸ 11/95	88460-35080+	**94513**	505	370	32	A/A
HI-LUX (97-)	G/D		M/A	+	LN 14#	05/98 ▸	88460-35210	**94518**	0	0	0	A/A
HI-LUX (97-)	G/D		M/A	+	LN 15#	05/98 ▸	88460-35210	**94518**	0	0	0	A/A
HI-LUX (97-)	G/D		M/A	+	LN 16#	05/98 ▸	88460-35210	**94518**	0	0	0	A/A
HI-LUX (97-)	G/D		M/A	+	LN 17#	05/98 ▸	88460-35210	**94518**	0	0	0	A/A
HI-LUX (97-)	G/D		M/A	+	RZN 14#	05/98 ▸	88460-35210	**94518**	0	0	0	A/A
HI-LUX (97-)	G/D		M/A	+	RZN 15#	05/98 ▸	88460-35210	**94518**	0	0	0	A/A
HI-LUX (97-) 2.4 D	D	2L	M	+/-	LN 1##	08/97 ▸ 08/01	88460-08520	**94517**	520	300	20	A/A
HI-LUX (97-) 2.4 TD	D	2LT	M	+/-	LN 1##	08/97 ▸ 08/01	88460-08520	**94517**	520	300	20	A/A
HI-LUX (97-) 2.4 TD	D	2LT	M	+/-	KDN 1##	08/97 ▸ 08/01	88460-08520	**94517**	520	300	20	A/A
HI-LUX (97-) 2.4 TD	D	2LT	M	+/-	LN ##	08/97 ▸ 08/01	88460-08520	**94517**	520	300	20	A/A
HI-LUX (97-) 2.4 TD	D	2LT	M	+/-	RZN 16#	08/97 ▸ 08/01	88460-08520	**94517**	520	300	20	A/A
HI-LUX (97-) 2.4 TD	D	2LT	M	+/-	RZN 17#	08/97 ▸ 08/01	88460-08520	**94517**	520	300	20	A/A
LAND CRUISER 100 (98-) 4.2 TD	D	1HDFTE	M	+/-	HDJ 100	08/00 ▸ 08/02	88461-60051	**94053**	476	520	22	A/A
LAND CRUISER 100 (98-) 4.2 TD	D	1HDFTE	A	+/-	HDJ 100	08/00 ▸ 08/02	88461-60051	**94053**	476	520	22	A/A
LAND CRUISER 60 (84-)	G/D		M/A	+	FJ 6#	08/87 ▸ 03/92	88460-90A14	**94052**	570	380	25	C/A
LAND CRUISER 60 (84-)	G/D		M/A	+	BJ 6#	08/87 ▸ 03/92	88460-90A14	**94052**	570	380	25	C/A
LAND CRUISER 80 (90-)				+	FJ 80	01/90 ▸ 05/93	88460-60060	**94187**	721	330	26	C/A
LAND CRUISER 80 (90-)				+	FZJ 80	01/90 ▸ 05/93	88460-60060	**94187**	721	330	26	C/A
LAND CRUISER 80 (90-)				+	HDJ 80	01/90 ▸ 05/93	88460-60060	**94187**	721	330	26	C/A
LAND CRUISER 80 (90-)				+	HZJ 80	01/90 ▸ 05/93	88460-60060	**94187**	721	330	26	C/A
LAND CRUISER 80 (94-)				+	FZJ 80	05/94 ▸	88460-60160	**94184**	719	330	26	C/A
LAND CRUISER 80 (94-)				+	HDJ 80	05/94 ▸	88460-60160	**94184**	719	330	26	C/A
LAND CRUISER 80 (94-)				+	HZJ 80	05/94 ▸	88460-60160	**94184**	719	330	26	C/A
LAND CRUISER 90 (96-) 3.0 TD	D	1KDFTV	M	+/-	KZJ 9#	04/96 ▸ 09/02	88460-60240+	**94512**	563	483	20	A/A
LAND CRUISER 90 (96-) 3.0 TD	D	1KDFTV	M	+/-	KDJ 9#	04/96 ▸ 09/02	88460-60240+	**94512**	563	483	20	A/A
LAND CRUISER 90 (96-) 3.0 TD	D	1KDFTV	A	+/-	KDJ 9#	04/96 ▸ 09/02	88460-60240+	**94512**	563	483	20	A/A
LAND CRUISER 90 (96-) 3.0 TD	D	1KDFTV	A	+/-	KZJ 9#	04/96 ▸ 09/02	88460-60240+	**94512**	563	483	20	A/A
LAND CRUISER 90 (96-) 3.0 TD	D	1KZTE	M	+/-	KZJ 9#	04/96 ▸ 09/02	88460-60240+	**94512**	563	483	20	A/A
LAND CRUISER 90 (96-) 3.0 TD	D	1KZTE	M	+/-	KDJ 9#	04/96 ▸ 09/02	88460-60240+	**94512**	563	483	20	A/A
LAND CRUISER 90 (96-) 3.0 TD	D	1KZTE	A	+/-	KDJ 9#	04/96 ▸ 09/02	88460-60240+	**94512**	563	483	20	A/A
LAND CRUISER 90 (96-) 3.0 TD	D	1KZTE	A	+/-	KZJ 9#	04/96 ▸ 09/02	88460-60240+	**94512**	563	483	20	A/A
LAND CRUISER 90 (96-) 3.4 i	G	5VZFE	M	+/-	VZJ 9#	04/96 ▸ 09/02	88460-60240+	**94512**	563	483	20	A/A
LAND CRUISER 90 (96-) 3.4 i	G	5VZFE	A	+/-	VZJ 9#	04/96 ▸ 09/02	88460-60240+	**94512**	563	483	20	A/A
LANDCRUISER HJ60				+				**94050**	600	394	22	A/A
VAUXHALL LIGHT VAN												
COMBO				+		11/93 ▸	1618 046 +	**94228**	600	305	20	A/A
VOLKSWAGEN LIGHT VAN												
CADDY (95-) 1.6 i	G	1F	M	+		11/95 ▸ 05/97	6K0.820.413 B	**94204**	548	360	16	A/A
CADDY (95-) 1.7 SDi	D	AHB	M	+		07/96 ▸ 09/00	6K0.820.413 B	**94204**	548	360	16	A/A
CADDY (95-) 1.9 D	D	1Y	M	+		11/95 ▸ 06/03	6K0.820.413 B	**94204**	548	360	16	A/A
CADDY (95-) 1.9 Sdi	D	AEY	M	+		11/95 ▸ 09/00	6K0.820.413 B	**94204**	548	360	16	A/A
CADDY (95-) 1.9 Sdi	D	AYQ	M	+/-		09/00 ▸ 06/03	6K0.820.413 B	**94204**	548	360	16	A/A

CONDENSERS

	G/D			AC	Note		OE	Nissens	Dim. H	W	T	Mat.
VOLKSWAGEN LIGHT VAN (../..)												
CADDY (95-) 1.9 Sdi	D	AYQ	M	+/-		09/00 ➧ 06/03	6K0.820.413 B	**94204**	548	360	16	A/A
CADDY (95-) 1.9 TDi	D	1Z	M	+		10/96 ➧ 03/97	6K0.820.413 B	**94204**	548	360	16	A/A
CADDY (95-) 1.9 TDi	D	AHU	M	+		10/96 ➧ 09/00	6K0.820.413 B	**94204**	548	360	16	A/A
CADDY (95-) 1.9 TDi	D	ALE	M	+		09/97 ➧ 09/00	6K0.820.413 B	**94204**	548	360	16	A/A
CADDY (04-) 1.4 i 16V	G	BCA	M	+/-		02/04 ➧	1T0.820.411 B	**94690**	550	443	16	A/A
CADDY (04-) 1.6 i	G	BGU	M	+/-		04/04 ➧	1T0.820.411 B	**94690**	550	443	16	A/A
CADDY (04-) 1.6 i	G	BSE	M	+/-		04/04 ➧	1T0.820.411 B	**94690**	550	443	16	A/A
CADDY (04-) 1.6 i	G	BSF	M	+/-		04/04 ➧	1T0.820.411 B	**94690**	550	443	16	A/A
CADDY (04-) 1.9 TDi	D	BJB	M	+/-	105 HP	02/04 ➧	1T0.820.411 B	**94690**	550	443	16	A/A
CADDY (04-) 1.9 TDi	D	BLS	M	+/-	105 HP	02/04 ➧	1T0.820.411 B	**94690**	550	443	16	A/A
CADDY (04-) 1.9 TDi	D	BSU	M	+/-		02/04 ➧	1T0.820.411 B	**94690**	550	443	16	A/A
CADDY (04-) 2.0 GAS	G	BSX	M	+/-		02/04 ➧	1T0.820.411 B	**94690**	550	443	16	A/A
CADDY (04-) 2.0 SDI	D	BDJ	M	+/-		02/04 ➧	1T0.820.411 B	**94690**	550	443	16	A/A
CADDY (04-) 2.0 SDI	D	BST	M	+/-		02/04 ➧	1T0.820.411 B	**94690**	550	443	16	A/A
LT (96-) 2.3 i	G	AGL	M	+/-		05/96 ➧ 11/01	2D0.820.413 A+	**94258**	610	377	22	A/A
LT (96-) 2.5 SDI	D	AGX	M	+/-		05/96 ➧ 04/01	2D0.820.413 A+	**94258**	610	377	22	A/A
LT (96-) 2.5 TDi	D	AHD	M	+/-		05/96 ➧ 05/99	2D0.820.413 A+	**94258**	610	377	22	A/A
LT (96-) 2.5 TDi	D	ANJ	M	+/-		05/99 ➧ 05/03	2D0.820.413 A+	**94258**	610	377	22	A/A
LT (96-) 2.5 TDi	D	APA	M	+/-		05/99 ➧ 04/01	2D0.820.413 A+	**94258**	610	377	22	A/A
LT (96-) 2.5 TDi	D	AVR	M	+/-		12/02 ➧ 05/03	2D0.820.413 A+	**94258**	610	377	22	A/A
LT (96-) 2.5 TDi	D	BBE	M	+/-		04/01 ➧ 05/03	2D0.820.413 A+	**94258**	610	377	22	A/A
LT (96-) 2.5 TDi	D	BBF	M	+/-		04/01 ➧ 05/03	2D0.820.413 A+	**94258**	610	377	22	A/A
LT (96-) 2.8 T-D	D	BCQ	M	+/-		05/02 ➧ 05/03	2D0.820.413 A+	**94258**	610	377	22	A/A
LT (96-) 2.8 TDi	D	AGK	M	+/-		07/97 ➧ 12/98	2D0.820.413 A+	**94258**	610	377	22	A/A
LT (96-) 2.8 TDi	D	ATA	M	+/-		01/99 ➧ 01/02	2D0.820.413 A+	**94258**	610	377	22	A/A
LT (96-) 2.8 TDi	D	AUH	M	+/-		02/02 ➧ 05/03	2D0.820.413 A+	**94258**	610	377	22	A/A
LT (03-) 2.5 TDi	D	ANJ	M	+		06/03 ➧	2D0.820.413 A+	**94258**	610	377	22	A/A
LT (03-) 2.5 TDi	D	AVR	M	+		06/03 ➧	2D0.820.413 A+	**94258**	610	377	22	A/A
LT (03-) 2.5 TDi	D	BBE	M	+		01/04 ➧	2D0.820.413 A+	**94258**	610	377	22	A/A
LT (03-) 2.5 TDi	D	BBF	M	+		01/04 ➧	2D0.820.413 A+	**94258**	610	377	22	A/A
LT (03-) 2.8 TD	D	BCQ	M	+		06/03 ➧	2D0.820.413 A+	**94258**	610	377	22	A/A
LT (03-) 2.8 TDi	D	AUH	M	+		06/03 ➧	2D0.820.413 A+	**94258**	610	377	22	A/A
TOUAREG (02-) 2.5 TDi	D	AHY	M/A	+/-		07/03 ➧	7L0.820.411 D+	**94667**	700	390	16	A/A
TOUAREG (02-) 2.5 TDi	D	BAC	M/A	+/-		01/03 ➧	7L0.820.411 D+	**94667**	700	390	16	A/A
TOUAREG (02-) 2.5 TDi	D	BLK	M/A	+/-		07/03 ➧	7L0.820.411 D+	**94667**	700	390	16	A/A
TOUAREG (02-) 2.5 TDi	D	BPD	M/A	+/-		07/03 ➧	7L0.820.411 D+	**94667**	700	390	16	A/A
TOUAREG (02-) 2.5 TDi	D	BPE	M/A	+/-		07/03 ➧	7L0.820.411 D+	**94667**	700	390	16	A/A
TOUAREG (02-) 3.0 TDi	G	BKS	M/A	+/-		11/04 ➧	7L0.820.411 D+	**94667**	700	390	16	A/A
TOUAREG (02-) 3.2 i V6	G	AZZ	M/A	+/-		11/02 ➧ 05/04	7L0.820.411 D+	**94667**	700	390	16	A/A
TOUAREG (02-) 3.2 i V6	G	BKJ	M/A	+/-		05/03 ➧ 05/04	7L0.820.411 D+	**94667**	700	390	16	A/A
TOUAREG (02-) 3.2 i V6	G	BMV	M/A	+/-		05/04 ➧	7L0.820.411 D+	**94667**	700	390	16	A/A
TOUAREG (02-) 3.2 i V6	G	BMX	M/A	+/-		05/04 ➧	7L0.820.411 D+	**94667**	700	390	16	A/A
TOUAREG (02-) 3.2 i V6	G	BRJ	M/A	+/-		05/04 ➧	7L0.820.411 D+	**94667**	700	390	16	A/A
TOUAREG (02-) 3.2 i V6	G	BAA	A	+/-		08/03 ➧ 05/04	7L0.820.411 D+	**94667**	700	390	16	A/A
TOUAREG (02-) 3.6 FSI	G	BHK	M/A	+/-		05/04 ➧	7L0.820.411 D+	**94667**	700	390	16	A/A
TOUAREG (02-) 3.6 FSI	G	BHL	M/A	+/-		05/04 ➧	7L0.820.411 D+	**94667**	700	390	16	A/A
TOUAREG (02-) 4.2 i V8 40V	G	AXQ	A	+/-		12/02 ➧	7L0.820.411 D+	**94667**	700	390	16	A/A
TOUAREG (02-) 5.0 TDi	D	AYH	A	+/-		11/02 ➧	7L0.820.411 D+	**94667**	700	390	16	A/A
TOUAREG (02-) 5.0 TDi	D	BLE	A	+/-		11/04 ➧	7L0.820.411 D+	**94667**	700	390	16	A/A
TOUAREG (02-) 5.0 TDi	D	BWF	A	+/-		11/04 ➧	7L0.820.411 D+	**94667**	700	390	16	A/A

CONDENSERS

	G/D			AC	Note		OE	Nissens	Dim. H W T	Mat.
VOLKSWAGEN LIGHT VAN (../..)										
TOUAREG (02-) 6.0 WR12	G	BJN	A	+/-		08/04 ➧	7L0.820.411 D+	**94667**	700 390 16	A/A
TOURAN (03-) 1.6 FSI	G	BAG	M	+	HD	02/03 ➧	1K0.820.411 F	**94684**	580 401 16	A/A
TOURAN (03-) 1.6 FSI	G	BAG	M	+/-		02/03 ➧	1K0.820.411 F	**94684**	580 401 16	A/A
TOURAN (03-) 1.6 FSI	G	BAG	A	+/-		02/03 ➧	1K0.820.411 F	**94684**	580 401 16	A/A
TOURAN (03-) 1.6 FSI	G	BLP	M	+	HD	02/03 ➧	1K0.820.411 F	**94684**	580 401 16	A/A
TOURAN (03-) 1.6 FSI	G	BLP	M	+/-		02/03 ➧	1K0.820.411 F	**94684**	580 401 16	A/A
TOURAN (03-) 1.6 FSI	G	BLP	A	+/-		02/03 ➧	1K0.820.411 F	**94684**	580 401 16	A/A
TOURAN (03-) 1.6 i 16V	G	BGU	M	+/-		02/03 ➧	1K0.820.411 F	**94684**	580 401 16	A/A
TOURAN (03-) 1.6 i 16V	G	BGU	A	+/-		02/03 ➧	1K0.820.411 F	**94684**	580 401 16	A/A
TOURAN (03-) 1.6 i 16V	G	BLF	M	+/-		02/03 ➧	1K0.820.411 F	**94684**	580 401 16	A/A
TOURAN (03-) 1.6 i 16V	G	BLF	A	+/-		02/03 ➧	1K0.820.411 F	**94684**	580 401 16	A/A
TOURAN (03-) 1.6 i 16V	G	BSE	M	+/-		02/03 ➧	1K0.820.411 F	**94684**	580 401 16	A/A
TOURAN (03-) 1.6 i 16V	G	BSF	M	+/-		02/03 ➧	1K0.820.411 F	**94684**	580 401 16	A/A
TOURAN (03-) 1.9 TDi	D	AVQ	M	+	HD	02/03 ➧	1K0.820.411 F	**94684**	580 401 16	A/A
TOURAN (03-) 1.9 TDi	D	AVQ	M	+/-		02/03 ➧	1K0.820.411 F	**94684**	580 401 16	A/A
TOURAN (03-) 1.9 TDi	D	BKC	M/A	-		02/03 ➧	1K0.820.411 F	**94684**	580 401 16	A/A
TOURAN (03-) 1.9 TDi	D	BKC	M/A	+		02/03 ➧	1K0.820.411 F	**94684**	580 401 16	A/A
TOURAN (03-) 1.9 TDi	D	BRU	M/A	-		02/03 ➧	1K0.820.411 F	**94684**	580 401 16	A/A
TOURAN (03-) 1.9 TDi	D	BRU	M/A	+		02/03 ➧	1K0.820.411 F	**94684**	580 401 16	A/A
TOURAN (03-) 2.0 FSi	G	AXW	M/A	+/-		02/03 ➧	1K0.820.411 F	**94684**	580 401 16	A/A
TOURAN (03-) 2.0 FSi	G	BLR	M/A	+/-		02/03 ➧	1K0.820.411 F	**94684**	580 401 16	A/A
TOURAN (03-) 2.0 GAS	G	BSX	M	+/-		02/03 ➧	1K0.820.411 F	**94684**	580 401 16	A/A
TOURAN (03-) 2.0 PD TDi	D	AZV	M/A	+		02/03 ➧	1K0.820.411 F	**94684**	580 401 16	A/A
TOURAN (03-) 2.0 PD TDi	D	BKD	M/A	+		02/03 ➧	1K0.820.411 F	**94684**	580 401 16	A/A
TOURAN (03-) 2.0 PD TDi	D	BLY	M/A	+		02/03 ➧	1K0.820.411 F	**94684**	580 401 16	A/A
TOURAN (03-) 2.0 PD TDi	D	BMM	M/A	+		02/03 ➧	1K0.820.411 F	**94684**	580 401 16	A/A
TOURAN (03-) 2.0 PD TDi	D	BMN	M/A	+		02/03 ➧	1K0.820.411 F	**94684**	580 401 16	A/A
TRANSPORTER T4 (90-) 1.9 TD	D	ABL	M	+/-		09/96 ➧ 06/03	7D0.820.413 B+	**94834**	640 310 16	A/A
TRANSPORTER T4 (90-) 1.9 TD	D	ABL	M	+/-		09/96 ➧ 06/03	7D0.820.413 B	**94524**	645 308 26	A/A
TRANSPORTER T4 (90-) 1.9 TD	D	ABL	M	+/-		10/92 ➧ 06/03	7D0.820.413+	**94834**	640 310 16	A/A
TRANSPORTER T4 (90-) 2.0 i	G	AAC	M/A	+/-		09/90 ➧ 06/03	701.820.413 D+	**94307**	682 308 16	A/A
TRANSPORTER T4 (90-) 2.0 i	G	AAC	M/A	+/-		09/96 ➧ 06/03	7D0.820.413 B+	**94834**	640 310 16	A/A
TRANSPORTER T4 (90-) 2.4 D	D	AJA	M/A	+/-		04/97 ➧ 06/03	7D0.820.413+	**94834**	640 310 16	A/A
TRANSPORTER T4 (90-) 2.4 D	D	AJA	M/A	+/-		04/97 ➧ 06/03	7D0.820.413+	**94834**	640 310 16	A/A
TRANSPORTER T4 (90-) 2.4 D	D	AAB	M	+/-		09/90 ➧ 04/98	701.820.413 D+	**94307**	682 308 16	A/A
TRANSPORTER T4 (90-) 2.4 D	D	AAB	M	+/-		09/96 ➧ 04/98	7D0.820.413 B	**94524**	645 308 26	A/A
TRANSPORTER T4 (90-) 2.5 i	G	ACU	M/A	+/-		02/94 ➧ 10/96	701.820.413 D+	**94307**	682 308 16	A/A
TRANSPORTER T4 (90-) 2.5 i	G	AEN	M/A	+/-		05/95 ➧ 12/95	701.820.413 D	**94307**	682 308 16	A/A
TRANSPORTER T4 (90-) 2.5 i	G	AET	M/A	+/-		08/96 ➧ 06/03	7D0.820.413+	**94834**	640 310 16	A/A
TRANSPORTER T4 (90-) 2.5 i	G	AET	M/A	+/-		08/96 ➧ 06/03	7D0.820.413+	**94834**	640 310 16	A/A
TRANSPORTER T4 (90-) 2.5 i	G	AEU	M/A	+/-		08/96 ➧ 06/03	7D0.820.413+	**94834**	640 310 16	A/A
TRANSPORTER T4 (90-) 2.5 i	G	AEU	M/A	+/-		08/96 ➧ 06/03	7D0.820.413+	**94834**	640 310 16	A/A
TRANSPORTER T4 (90-) 2.5 i	G	APL	M/A	+/-		05/99 ➧ 12/99	7D0.820.413+	**94834**	640 310 16	A/A
TRANSPORTER T4 (90-) 2.5 i	G	APL	M/A	+/-		05/99 ➧ 12/99	7D0.820.413+	**94834**	640 310 16	A/A
TRANSPORTER T4 (90-) 2.5 i	G	AVT	M/A	+/-		12/99 ➧ 06/03	7D0.820.413+	**94834**	640 310 16	A/A
TRANSPORTER T4 (90-) 2.5 i	G	AVT	M/A	+/-		12/99 ➧ 06/03	7D0.820.413+	**94834**	640 310 16	A/A
TRANSPORTER T4 (90-) 2.5 TDi	D	ACV	M	+/-		09/95 ➧ 06/03	7D0.820.413 B	**94524**	645 308 26	A/A
TRANSPORTER T4 (90-) 2.5 TDi	D	ACV	M	+/-		09/96 ➧ 06/03	7D0.820.413+	**94834**	640 310 16	A/A
TRANSPORTER T4 (90-) 2.5 TDi	D	ACV	A	+/-		05/98 ➧ 06/03	7D0.820.413+	**94834**	640 310 16	A/A
TRANSPORTER T4 (90-) 2.5 TDi	D	AHY	M	+/-		05/98 ➧ 09/00	7D0.820.413+	**94834**	640 310 16	A/A
TRANSPORTER T4 (90-) 2.5 TDi	D	AHY	M	+/-		05/98 ➧ 09/00	7D0.820.413+	**94834**	640 310 16	A/A

CONDENSERS

	G/D			AC	Note		OE	Nissens	Dim. H	W	T	Mat.
VOLKSWAGEN LIGHT VAN (../..)												
TRANSPORTER T4 (90-) 2.5 TDi	D	AJT	M	+/-		05/98 ➧ 06/03	7D0.820.413+	**94834**	640	310	16	A/A
TRANSPORTER T4 (90-) 2.5 TDi	D	AJT	M	+/-		05/98 ➧ 06/03	7D0.820.413+	**94834**	640	310	16	A/A
TRANSPORTER T4 (90-) 2.5 TDi	D	AUF	A	+/-		11/99 ➧ 06/03	7D0.820.413+	**94834**	640	310	16	A/A
TRANSPORTER T4 (90-) 2.5 TDi	D	AUF	A	+/-		11/99 ➧ 06/03	7D0.820.413+	**94834**	640	310	16	A/A
TRANSPORTER T4 (90-) 2.5 TDi	D	AXG	M	+/-		09/00 ➧ 06/03	7D0.820.413+	**94834**	640	310	16	A/A
TRANSPORTER T4 (90-) 2.5 TDi	D	AXG	M	+/-		09/00 ➧ 06/03	7D0.820.413+	**94834**	640	310	16	A/A
TRANSPORTER T4 (90-) 2.5 TDi	D	AYC	M/A	+/-		04/01 ➧ 06/03	7D0.820.413+	**94834**	640	310	16	A/A
TRANSPORTER T4 (90-) 2.5 TDi	D	AYC	M/A	+/-		04/01 ➧ 06/03	7D0.820.413+	**94834**	640	310	16	A/A
TRANSPORTER T4 (90-) 2.5 TDi	D	AYY	M	+/-		10/01 ➧ 06/03	7D0.820.413+	**94834**	640	310	16	A/A
TRANSPORTER T4 (90-) 2.5 TDi	D	AYY	M	+/-		10/01 ➧ 06/03	7D0.820.413+	**94834**	640	310	16	A/A
TRANSPORTER T4 (90-) 2.8 i V6	G	AMV	A	+/-		05/00 ➧ 06/03	7D0.820.413+	**94834**	640	310	16	A/A
TRANSPORTER T4 (90-) 2.8 i V6	G	AMV	A	+/-		05/00 ➧ 06/03	7D0.820.413+	**94834**	640	310	16	A/A
TRANSPORTER T4 (90-) 2.8 i VR6	G	AES	M/A	+/-		01/96 ➧ 05/00	7D0.820.413 B+	**94834**	640	310	16	A/A
TRANSPORTER T5 (03-) 1.9 TDi	D	AXB	M	+/-		04/03 ➧	7H0.820.411 B+	**94604**	890	600	16	A/A
TRANSPORTER T5 (03-) 1.9 TDi	D	AXC	M	+/-		04/03 ➧	7H0.820.411 B+	**94604**	890	600	16	A/A
TRANSPORTER T5 (03-) 1.9 TDi	D	BRR	M	+/-		04/03 ➧	7H0.820.411 B+	**94604**	890	600	16	A/A
TRANSPORTER T5 (03-) 1.9 TDi	D	BRS	M	+/-		04/03 ➧	7H0.820.411 B+	**94604**	890	600	16	A/A
TRANSPORTER T5 (03-) 2.0 i	G	AXA	M	+/-		11/03 ➧	7H0.820.411 B+	**94604**	890	600	16	A/A
TRANSPORTER T5 (03-) 2.5 TDi	D	AXD	M	+/-		04/03 ➧	7H0.820.411 B+	**94604**	890	600	16	A/A
TRANSPORTER T5 (03-) 2.5 TDi	D	AXD	A	+/-		04/03 ➧	7H0.820.411 B+	**94604**	890	600	16	A/A
TRANSPORTER T5 (03-) 2.5 TDi	D	AXE	M	+/-		04/03 ➧	7H0.820.411 B+	**94604**	890	600	16	A/A
TRANSPORTER T5 (03-) 2.5 TDi	D	AXE	A	+/-		04/03 ➧	7H0.820.411 B+	**94604**	890	600	16	A/A
TRANSPORTER T5 (03-) 2.5 TDi	D	BLJ	M	+/-		11/03 ➧	7H0.820.411 B+	**94604**	890	600	16	A/A
TRANSPORTER T5 (03-) 2.5 TDi	D	BNZ	M	+/-		04/03 ➧	7H0.820.411 B+	**94604**	890	600	16	A/A
TRANSPORTER T5 (03-) 2.5 TDi	D	BPC	M	+/-		04/03 ➧	7H0.820.411 B+	**94604**	890	600	16	A/A
TRANSPORTER T5 (03-) 3.2 i V6	G	BDL	M	+/-		11/03 ➧	7H0.820.411 B+	**94604**	890	600	16	A/A
TRANSPORTER T5 (03-) 3.2 i V6	G	BDL	A	+/-		11/03 ➧	7H0.820.411 B+	**94604**	890	600	16	A/A
TRANSPORTER T5 (03-) 3.2 i V6	G	BKK	M	+/-		11/03 ➧	7H0.820.411 B+	**94604**	890	600	16	A/A
TRANSPORTER T5 (03-) 3.2 i V6	G	BKK	A	+/-		11/03 ➧	7H0.820.411 B+	**94604**	890	600	16	A/A

DRYERS

	G/D			AC	Note		OE		Nissens	Dim. H	Dim. W	Dim. T	Mat.
CITROEN LIGHT VAN													
BERLINGO (96-) 1.1 i	G	TU1M	M	+		07/96 ➧	6453.P8	+	**95011**	0	0	0	X
BERLINGO (96-) 1.1 i	G	TU1M	M	+		07/96 ➧	6455.X8	+	**95109**	0	0	0	X
BERLINGO (96-) 1.4 i	G	TU3JP	M	+/-		07/96 ➧ 09/98	6453.P8	+	**95011**	0	0	0	X
BERLINGO (96-) 1.4 i	G	TU3JP	M	+/-		10/98 ➧	6453.P8	+	**95011**	0	0	0	X
BERLINGO (96-) 1.6 i	G	TU5JP	M	+/-		07/96 ➧	6453.P8	+	**95011**	0	0	0	X
BERLINGO (96-) 1.6 i 16V	G	TU5JP4	M	+/-		10/98 ➧	6453.P8	+	**95011**	0	0	0	X
BERLINGO (96-) 1.8 D	D	XUD7	M	+		06/96 ➧ 10/98	6455.X7	+	**95202**	0	0	0	X
BERLINGO (96-) 1.8 D	D	XUD7	M	+		10/98 ➧	6455.X7	+	**95202**	0	0	0	X
BERLINGO (96-) 1.8 i	G	XU7JB	M	+/-		07/97 ➧ 09/98	6453.P8	+	**95011**	0	0	0	X
BERLINGO (96-) 1.8 i	G	XU7JB	M	+/-		10/98 ➧	6453.P8	+	**95011**	0	0	0	X
BERLINGO (96-) 1.9 D	D	XUD9,DW8, DW8B	M	+		06/96 ➧ 10/98	6455.X7	+	**95202**	0	0	0	X
BERLINGO (96-) 1.9 D	D	XUD9,DW8, DW8B	M	+		11/98 ➧	6455.X7	+	**95202**	0	0	0	X
BERLINGO (96-) 2.0 HDi	D	DW10TD	M	+/-		10/99 ➧	6453.P8	+	**95011**	0	0	0	X
BERLINGO (02-) 1.1 i	G	TU1JP	M	+/-		12/02 ➧	6455.AH	+	**95346**	0	0	0	X
BERLINGO (02-) 1.1 i	G	TU1JP	M	+/-		12/02 ➧	6455.AH	+	**95346**	0	0	0	X
BERLINGO (02-) 1.4 i	G	TU3JP	M	+/-		12/02 ➧	6455.AH	+	**95346**	0	0	0	X
BERLINGO (02-) 1.4 i	G	TU3JP	M	+/-		12/02 ➧	6455.AH	+	**95346**	0	0	0	X
BERLINGO (02-) 1.6 HDI	D	DV6B	M	+/-		12/02 ➧	6455.AH	+	**95346**	0	0	0	X
BERLINGO (02-) 1.6 HDI 16V	D	DV6TED4	M	+/-		12/02 ➧	6455.AH	+	**95346**	0	0	0	X
BERLINGO (02-) 1.6 i 16V	G	TU5JP4	M	+/-		12/02 ➧	6455.AH	+	**95346**	0	0	0	X
BERLINGO (02-) 1.6 i 16V	G	TU5JP4	M	+/-		12/02 ➧	6455.AH	+	**95346**	0	0	0	X
BERLINGO (02-) 1.9 D	D	DW8B	M	+/-		12/02 ➧	6455.AH	+	**95346**	0	0	0	X
BERLINGO (02-) 2.0 HDi	D	DW10TD	M	+/-		12/02 ➧	6455.AH	+	**95346**	0	0	0	X
DISPATCH (95-) 1.6 i	G	SPI	M	+		10/95 ➧	6455.Q7		**95010**	0	0	0	X
DISPATCH (95-) 1.9 D	D	DW8	M	+		10/95 ➧	6455.Q7		**95010**	0	0	0	X
DISPATCH (95-) 1.9 D	D	XUD9A	M	+		10/95 ➧	6455.Q7		**95010**	0	0	0	X
DISPATCH (95-) 1.9 TD	D	XUDTE	M	+/-		10/95 ➧	6455.Q7		**95010**	0	0	0	X
DISPATCH (95-) 2.0 HDi	D	DW10ATED	M	+/-		02/00 ➧	6455.Q7		**95010**	0	0	0	X
DISPATCH (95-) 2.1 TD	D	XUD11ATE	M	+/-		10/95 ➧	6455.Q7		**95010**	0	0	0	X
JUMPER (94-) 1.9 D	D	XUD9AU	M	+/-		02/94 ➧ 01/02	6455.T4		**95105**	0	0	0	X
JUMPER (94-) 1.9 TD	D	XUD9UTF	M	+/-		02/94 ➧ 01/02	6455.T4		**95105**	0	0	0	X
JUMPER (94-) 2.0	G	XU102C	M	+/-	TROPIC	02/94 ➧ 01/02	6455.T4		**95105**	0	0	0	X
JUMPER (94-) 2.0	G	XU10J2U	M	+		02/94 ➧ 01/02	6455.T4		**95105**	0	0	0	X
JUMPER (94-) 2.5 D	D	DJ5	M	+		02/94 ➧ 01/02	6455.T4		**95105**	0	0	0	X
JUMPER (94-) 2.5 TD	D	DJ5T	M	+		02/94 ➧ 01/02	6455.T4		**95105**	0	0	0	X
JUMPER (94-) 2.8 D	D	SOFIM	M	+/-		02/94 ➧ 01/02	6455.T4		**95105**	0	0	0	X
JUMPER (94-) 2.8 HDi	D	8140-43/63	M	+/-		02/94 ➧ 01/02	6455.T4		**95105**	0	0	0	X
JUMPER (94-) 2.8 TD	D	8140-43/63	M	+/-		02/94 ➧ 01/02	6455.T4		**95105**	0	0	0	X
JUMPY (95-) 1.6 i	G	SPI	M	+		10/95 ➧	6455.Q7		**95010**	0	0	0	X
JUMPY (95-) 1.9 D	D	DW8	M	+		10/95 ➧	6455.Q7		**95010**	0	0	0	X
JUMPY (95-) 1.9 D	D	XUD9A	M	+		10/95 ➧	6455.Q7		**95010**	0	0	0	X
JUMPY (95-) 1.9 TD	D	XUDTE	M	+/-		10/95 ➧	6455.Q7		**95010**	0	0	0	X
JUMPY (95-) 2.0 HDi	D	DW10ATED	M	+/-		02/00 ➧	6455.Q7		**95010**	0	0	0	X
JUMPY (95-) 2.1 TD	D	XUD11ATE	M	+/-		10/95 ➧	6455.Q7		**95010**	0	0	0	X
RELAY (94-) 1.9 D	D	XUD9AU	M	+/-		02/94 ➧ 01/02	6455.T4		**95105**	0	0	0	X
RELAY (94-) 1.9 TD	D	XUD9UTF	M	+/-		02/94 ➧ 01/02	6455.T4		**95105**	0	0	0	X
RELAY (94-) 2.0	G	XU102C	M	+/-		02/94 ➧ 01/02	6455.T4		**95105**	0	0	0	X
RELAY (94-) 2.0	G	XU10J2U	M	+		02/94 ➧ 01/02	6455.T4		**95105**	0	0	0	X
RELAY (94-) 2.5 D	D	DJ5	M	+		02/94 ➧ 01/02	6455.T4		**95105**	0	0	0	X
RELAY (94-) 2.5 TD	D	DJ5T	M	+		02/94 ➧ 01/02	6455.T4		**95105**	0	0	0	X

DRYERS

	G/D			AC	Note		OE		Nissens	Dim. H	W	T	Mat.
CITROEN LIGHT VAN (../..)													
RELAY (94-) 2.8 D	D	2798	M	+/-		02/94 ➧ 01/02	6455.T4		**95105**	0	0	0	X
RELAY (94-) 2.8 HDi	D	8140-43/63	M	+/-		02/94 ➧ 01/02	6455.T4		**95105**	0	0	0	X
RELAY (94-) 2.8 TD	D	8140-43/63	M	+/-		02/94 ➧ 01/02	6455.T4		**95105**	0	0	0	X
FIAT LIGHT VAN													
DOBLO (01-) 1.2 i	G	223 A5.000	M	+		03/01 ➧	46521840	+	**95170**	0	0	0	X
DOBLO (01-) 1.3 JTD	D	188 A9.000	M	+		01/03 ➧	46745058		**95323**	0	0	0	X
DOBLO (01-) 1.6 i 16V	G	182 B6.000	M	+		10/01 ➧ 05/05	46521840	+	**95170**	0	0	0	X
DOBLO (01-) 1.9 D	D	223 A6.000	M	+		03/01 ➧	46521840	+	**95170**	0	0	0	X
DOBLO (01-) 1.9 JTD	D	182 B9.000	M	+		10/01 ➧	46745058		**95323**	0	0	0	X
DUCATO (94-) 1.9 D	D	D9B	M	+/-		02/94 ➧ 01/02	46527180		**95170**	0	0	0	X
DUCATO (94-) 1.9 TD	D	XUD9TF	M	+		02/94 ➧ 01/02	46527180	+	**95170**	0	0	0	X
DUCATO (94-) 2.0 i	G	RFW	M	+		02/94 ➧ 01/02	46527180	+	**95170**	0	0	0	X
DUCATO (94-) 2.0 JTD	D	DW10TD	M	+		02/94 ➧ 01/02	46527180	+	**95170**	0	0	0	X
DUCATO (94-) 2.5 D	D	8140.67	M	+		02/94 ➧ 01/02	46527180	+	**95170**	0	0	0	X
DUCATO (94-) 2.5 JTD	D	8140.47	M	+		02/94 ➧ 01/02	46527180	+	**95170**	0	0	0	X
DUCATO (94-) 2.5 TD	D	8140.47	M	+		02/94 ➧ 01/02	46527180	+	**95170**	0	0	0	X
DUCATO (94-) 2.8 D	D	8140.63	M	+/-		02/94 ➧ 01/02	46527180		**95170**	0	0	0	X
DUCATO (94-) 2.8 JTD	D	8140.43S	M	+/-		02/94 ➧ 11/01	46527180	+	**95170**	0	0	0	X
DUCATO (94-) 2.8 TD	D	8140.43	M	+/-		02/94 ➧ 11/01	46527180	+	**95170**	0	0	0	X
DUCATO (02-) 2.0 i	G	RFL	M	+/-		01/02 ➧	46527180	+	**95170**	0	0	0	X
DUCATO (02-) 2.0 JTD	D	DW10TD	M	+		01/02 ➧	46527180	+	**95170**	0	0	0	X
DUCATO (02-) 2.2 JTD	D	2179 DW12TED	M	+		01/02 ➧	46527180	+	**95170**	0	0	0	X
DUCATO (02-) 2.3 JTD	D	F1AE0481C	M	+		01/02 ➧	46527180	+	**95170**	0	0	0	X
DUCATO (02-) 2.8 JTD	D	8140.43S	M	+		01/02 ➧	46527180	+	**95170**	0	0	0	X
FIORINO (04-) 1.2 i	G		M	+/-		09/04 ➧	7742746		**95170**	0	0	0	X
SCUDO (96-) 1.6 i	G	220 A2.000	M	+		07/95 ➧	9617682080		**95010**	0	0	0	X
SCUDO (96-) 1.9 D	D	D9B	M	+		07/95 ➧	9617682080		**95010**	0	0	0	X
SCUDO (96-) 1.9 TD	D	D8B	M	+/-		07/95 ➧	9617682080		**95010**	0	0	0	X
SCUDO (96-) 2.0 i 16V	G	RFN	M	+		07/95 ➧	9617682080		**95010**	0	0	0	X
SCUDO (96-) 2.0 JTD	D	RHX	M	+/-		02/00 ➧	6455.Q7		**95010**	0	0	0	X
SCUDO (96-) 2.0 JTD	D	RHZ	M	+/-		02/00 ➧	6455.Q7		**95010**	0	0	0	X
FORD LIGHT VAN													
MAVERICK (02-) 2.0 i 16V	G		M/A	+/-		09/02 ➧	EC01-61-5A0		**95370**	0	0	0	X
MAVERICK (02-) 2.3 i 16V	G		M/A	+/-		09/02 ➧	EC01-61-5A0		**95370**	0	0	0	X
MAVERICK (02-) 3.0 i V6 24V	G		M/A	+/-		09/02 ➧	EC01-61-5A0		**95370**	0	0	0	X
TRANSIT (94-) 2.0 EFi	G		M	+		08/94 ➧	1002142	+	**95353**	0	0	0	X
TRANSIT (94-) 2.5 D	D		M	+		08/94 ➧	1002142	+	**95353**	0	0	0	X
TRANSIT (94-) 2.5 TD	D		M	+		08/94 ➧	1002142	+	**95353**	0	0	0	X
TRANSIT (94-) 2.5 TD	D		A	+		08/94 ➧	1002142	+	**95353**	0	0	0	X
TRANSIT (94-) 2.5 TDi	D		M	+		08/94 ➧	1002142	+	**95353**	0	0	0	X
TRANSIT (00-) 2.0 D 75 HP	D		M	+/-		08/00 ➧	3C1H 19E647 AA	+	**95329**	0	0	0	X
TRANSIT (00-) 2.0 D 85 HP	D		M	+/-		08/00 ➧	3C1H 19E647 AA	+	**95329**	0	0	0	X
TRANSIT (00-) 2.0 D 100 HP	D		M	+/-		08/00 ➧	3C1H 19E647 AA	+	**95329**	0	0	0	X
TRANSIT (00-) 2.0 TDCI 125 HP	D		M	+/-		08/00 ➧	3C1H 19E647 AA	+	**95329**	0	0	0	X
TRANSIT (00-) 2.3 i 16V	G		M	+/-		01/00 ➧	3C1H 19E647 AA	+	**95329**	0	0	0	X
TRANSIT (00-) 2.4 D 75 HP	D		M	+		01/00 ➧	3C1H 19E647 AA	+	**95329**	0	0	0	X
TRANSIT (00-) 2.4 D 90 HP	D		M	+		01/00 ➧	3C1H 19E647 AA	+	**95329**	0	0	0	X

DRYERS

	G/D			AC	Note		OE	Nissens	Dim. H	Dim. W	Dim. T	Mat.
FORD LIGHT VAN (../..)												
TRANSIT (00-) 2.4 D 115 HP	D		M	+		07/00 ➧	3C1H 19E647 AA+	**95329**	0	0	0	X
TRANSIT (00-) 2.4 D 120 HP	D		M	+		07/00 ➧	3C1H 19E647 AA+	**95329**	0	0	0	X
TRANSIT (00-) 2.4 D 125 HP	D		M	+		07/00 ➧	3C1H 19E647 AA+	**95329**	0	0	0	X
TRANSIT (00-) 2.4 TDCI 135 HP	D		M	+		03/04 ➧	3C1H 19E647 AA+	**95329**	0	0	0	X
TRANSIT CONNECT (02-) 1.8 Di	D		M	+	75 HP	05/02 ➧	2T1H19E647AE+	**95331**	0	0	0	X
TRANSIT CONNECT (02-) 1.8 Di	D		M	+	90 HP	08/02 ➧	2T1H19E647AE+	**95331**	0	0	0	X
TRANSIT CONNECT (02-) 1.8 i 16V	G		M	+		05/02 ➧	2T1H19E647AE+	**95331**	0	0	0	X
TRANSIT CONNECT (02-) 1.8 TDCi	D		M	+	75 HP	08/02 ➧	2T1H19E647AE+	**95331**	0	0	0	X
TRANSIT CONNECT (02-) 1.8 TDCi	D		M	+	90 HP	08/02 ➧	2T1H19E647AE+	**95331**	0	0	0	X
LDV (96-) LIGHT VAN												
CONVOY (98-) 2.5 DI	D	EN55	M	+/-		10/98 ➧	1618 013	**95027**	0	0	0	X
CONVOY (98-) 2.5 TDi	D	ET70	M	+/-		10/98 ➧	1618 013	**95027**	0	0	0	X
MAZDA LIGHT VAN												
MPV LV (95-) 2.5 TD	D	WLT	M	+/-		12/95 ➧	+	**95180**	0	0	0	X
MPV LV (95-) 2.5 TD	D	WLT	M	+/-		12/95 ➧		**95181**	0	0	0	X
MPV LV (95-) 3.0 i	G	JE	M	+/-		12/95 ➧	+	**95180**	0	0	0	X
MPV LV (95-) 3.0 i	G	JE	A	+/-		12/95 ➧	+	**95180**	0	0	0	X
MPV LV52				+		10/93 ➧ 10/95		**95180**	0	0	0	X
MPV LV52 3.0 i	G			+/-		/91 ➧ 10/95		**95180**	0	0	0	X
TRIBUTE (02-) 2.0 i 16V	G		M/A	+/-		09/02 ➧	EC01-61-5A0	**95370**	0	0	0	X
TRIBUTE (02-) 2.3 i 16V	G		M/A	+/-		09/02 ➧	EC01-61-5A0	**95370**	0	0	0	X
TRIBUTE (02-) 3.0 i V6 24V	G		M/A	+/-		09/02 ➧	EC01-61-5A0	**95370**	0	0	0	X
MERCEDES LIGHT VAN												
SPRINTER (95-) 208 CDI	D	OM611.987	M	+/-		04/00 ➧	901 550 01 80	**95230**	0	0	0	X
SPRINTER (95-) 208 CDI	D	OM611.987	A	+/-		04/00 ➧	901 550 01 80	**95230**	0	0	0	X
SPRINTER (95-) 208 D	D	OM 601	M	+		01/95 ➧ 04/00	901 550 01 80	**95230**	0	0	0	X
SPRINTER (95-) 208 D	D	OM 601	M	+		01/95 ➧ 04/00	901 550 01 80	**95230**	0	0	0	X
SPRINTER (95-) 208 D	D	OM 601	A	+		01/95 ➧ 04/00	901 550 01 80	**95230**	0	0	0	X
SPRINTER (95-) 210 D	D	OM 601	M	+		02/95 ➧ 04/00	901 550 01 80	**95230**	0	0	0	X
SPRINTER (95-) 210 D	D	OM 602	M	+		02/95 ➧ 04/00	901 550 01 80	**95230**	0	0	0	X
SPRINTER (95-) 210 D	D	OM 602	A	+		02/95 ➧ 04/00	901 550 01 80	**95230**	0	0	0	X
SPRINTER (95-) 211 CDI	D	OM611.981/987	M	+/-		04/00 ➧	901 550 01 80	**95230**	0	0	0	X
SPRINTER (95-) 211 CDI	D	OM611.981/987	A	+/-		04/00 ➧	901 550 01 80	**95230**	0	0	0	X
SPRINTER (95-) 212 D	D	OM 601	M	+		02/95 ➧ 04/00	901 550 01 80	**95230**	0	0	0	X
SPRINTER (95-) 212 D	D	OM 602	M	+		02/95 ➧ 04/00	901 550 01 80	**95230**	0	0	0	X
SPRINTER (95-) 212 D	D	OM 602	A	+		02/95 ➧ 04/00	901 550 01 80	**95230**	0	0	0	X
SPRINTER (95-) 213 CDI	D	OM611.981/987	M	+/-		04/00 ➧	901 550 01 80	**95230**	0	0	0	X
SPRINTER (95-) 213 CDI	D	OM611.981/987	A	+/-		04/00 ➧	901 550 01 80	**95230**	0	0	0	X
SPRINTER (95-) 214	G	M 111	M	+		02/95 ➧	901 550 01 80	**95230**	0	0	0	X
SPRINTER (95-) 214	G	M 111	A	+		02/95 ➧	901 550 01 80	**95230**	0	0	0	X
SPRINTER (95-) 216 CDI	D	OM612.981	M	+/-		04/00 ➧	901 550 01 80	**95230**	0	0	0	X
SPRINTER (95-) 216 CDI	D	OM612.981	A	+/-		04/00 ➧	901 550 01 80	**95230**	0	0	0	X
SPRINTER (95-) 308 CDI	D	OM611.987	M	+/-		04/00 ➧	901 550 01 80	**95230**	0	0	0	X
SPRINTER (95-) 308 CDI	D	OM611.987	A	+/-		04/00 ➧	901 550 01 80	**95230**	0	0	0	X
SPRINTER (95-) 308 D	D	OM 601	M	+		02/95 ➧ 04/00	901 550 01 80	**95230**	0	0	0	X
SPRINTER (95-) 308 D	D	OM 601	A	+		02/95 ➧ 04/00	901 550 01 80	**95230**	0	0	0	X
SPRINTER (95-) 310 D	D	OM 602	M	+		02/95 ➧ 04/00	901 550 01 80	**95230**	0	0	0	X

DRYERS

	G/D			AC	Note		OE	Nissens	Dim. H	Dim. W	Dim. T	Mat.
MERCEDES LIGHT VAN (../..)												
SPRINTER (95-) 310 D	D	OM 602	M	+		02/95 ➧ 04/00	901 550 01 80	**95230**	0	0	0	X
SPRINTER (95-) 310 D	D	OM 602	A	+		02/95 ➧ 04/00	901 550 01 80	**95230**	0	0	0	X
SPRINTER (95-) 311 CDI	D	OM611.981/987	M	+/-		04/00 ➧	901 550 01 80	**95230**	0	0	0	X
SPRINTER (95-) 311 CDI	D	OM611.981/987	A	+/-		04/00 ➧	901 550 01 80	**95230**	0	0	0	X
SPRINTER (95-) 312 D	D	OM 602	M	+		02/95 ➧ 04/00	901 550 01 80	**95230**	0	0	0	X
SPRINTER (95-) 312 D	D	OM 602	M	+		02/95 ➧ 04/00	901 550 01 80	**95230**	0	0	0	X
SPRINTER (95-) 312 D	D	OM 602	A	+		02/95 ➧ 04/00	901 550 01 80	**95230**	0	0	0	X
SPRINTER (95-) 313 CDI	D	OM611.981/987	M	+/-		04/00 ➧	901 550 01 80	**95230**	0	0	0	X
SPRINTER (95-) 313 CDI	D	OM611.981/987	A	+/-		04/00 ➧	901 550 01 80	**95230**	0	0	0	X
SPRINTER (95-) 314	G	M 111	M	+		02/95 ➧ 04/00	901 550 01 80	**95230**	0	0	0	X
SPRINTER (95-) 314	G	M 111	A	+		02/95 ➧ 04/00	901 550 01 80	**95230**	0	0	0	X
SPRINTER (95-) 316 CDI	D	OM612.981	M	+/-		04/00 ➧	901 550 01 80	**95230**	0	0	0	X
SPRINTER (95-) 316 CDI	D	OM612.981	A	+/-		04/00 ➧	901 550 01 80	**95230**	0	0	0	X
SPRINTER (95-) 408 CDI	D	OM611.987	M	+/-		04/00 ➧	901 550 01 80	**95230**	0	0	0	X
SPRINTER (95-) 408 CDI	D	OM611.987	A	+/-		04/00 ➧	901 550 01 80	**95230**	0	0	0	X
SPRINTER (95-) 408 D	D	OM 601	M	+		02/96 ➧	901 550 01 80	**95230**	0	0	0	X
SPRINTER (95-) 408 D	D	OM 601	M	+		02/96 ➧	901 550 01 80	**95230**	0	0	0	X
SPRINTER (95-) 408 D	D	OM 601	A	+/-		02/96 ➧	901 550 01 80	**95230**	0	0	0	X
SPRINTER (95-) 410 D	D	OM602.980	M	+		02/96 ➧	901 550 01 80	**95230**	0	0	0	X
SPRINTER (95-) 410 D	D	OM602.980	M	+		02/96 ➧	901 550 01 80	**95230**	0	0	0	X
SPRINTER (95-) 410 D	D	OM602.980	A	+		02/96 ➧	901 550 01 80	**95230**	0	0	0	X
SPRINTER (95-) 411 CDI	D	OM611.981/987	M	+/-		04/00 ➧	901 550 01 80	**95230**	0	0	0	X
SPRINTER (95-) 411 CDI	D	OM611.981/987	A	+/-		04/00 ➧	901 550 01 80	**95230**	0	0	0	X
SPRINTER (95-) 412 D	D	OM602.980	M	+		02/96 ➧	901 550 01 80	**95230**	0	0	0	X
SPRINTER (95-) 412 D	D	OM602.980	M	+		02/96 ➧	901 550 01 80	**95230**	0	0	0	X
SPRINTER (95-) 412 D	D	OM602.980	A	+		02/96 ➧	901 550 01 80	**95230**	0	0	0	X
SPRINTER (95-) 413 CDI	D	OM612.981	M	+/-		04/00 ➧	901 550 01 80	**95230**	0	0	0	X
SPRINTER (95-) 413 CDI	D	OM612.981	A	+/-		04/00 ➧	901 550 01 80	**95230**	0	0	0	X
SPRINTER (95-) 414	G	M111.979	M	+		02/96 ➧	901 550 01 80	**95230**	0	0	0	X
SPRINTER (95-) 414	G	M111.979	A	+		02/96 ➧	901 550 01 80	**95230**	0	0	0	X
SPRINTER (95-) 416 CDI	D	OM612.981	M	+/-		04/00 ➧	901 550 01 80	**95230**	0	0	0	X
SPRINTER (95-) 416 CDI	D	OM612.981	A	+/-		04/00 ➧	901 550 01 80	**95230**	0	0	0	X
SPRINTER (95-) 616 CDI	D	OM612.981	M	+/-		04/00 ➧	901 550 01 80	**95230**	0	0	0	X
SPRINTER (95-) 616 CDI	D	OM612.981	A	+/-		04/00 ➧	901 550 01 80	**95230**	0	0	0	X
VANEO (02-) 1.6	G	M166.961	M/A	+/-		02/02 ➧	414 830 00 58+	**95328**	130	60	0	X
VANEO (02-) 1.7 CDI	D	OM668.914	M/A	+/-		02/02 ➧	414 830 00 58+	**95328**	130	60	0	X
VANEO (02-) 1.9	G	M166.991	M/A	+/-		02/02 ➧	414 830 00 58+	**95328**	130	60	0	X
VIANO W 639 (03-) 2.0 CDI	D	OM646	M	+/-		09/03 ➧	639 835 05 47	**95358**	0	0	0	X
VIANO W 639 (03-) 2.2 CDI	D	OM646	M	+/-		09/03 ➧	639 835 05 47	**95358**	0	0	0	X
VIANO W 639 (03-) 3.2 i V6	G	M112	M	+/-		09/03 ➧	639 835 05 47	**95358**	0	0	0	X
VIANO W 639 (03-) 3.5 i V6	G	M112	M	+/-		09/03 ➧	639 835 05 47	**95358**	0	0	0	X
VITO W 638 (96-) 108 CDI	D	OM611.940	M	+		03/99 ➧	901 550 00 80	**95229**	0	0	0	X
VITO W 638 (96-) 108 CDI	D	OM611.940	A	+		03/99 ➧	901 550 00 80	**95229**	0	0	0	X
VITO W 638 (96-) 108 D	D	OM601.942	M/A	+		02/96 ➧ 03/99	901 550 00 80	**95229**	0	0	0	X
VITO W 638 (96-) 110 CDI	D	OM611.980	M	+		03/99 ➧	901 550 00 80	**95229**	0	0	0	X
VITO W 638 (96-) 110 CDI	D	OM611.980	A	+		03/99 ➧	901 550 00 80	**95229**	0	0	0	X
VITO W 638 (96-) 110 TD	D	OM601.970	M/A	+		02/96 ➧ 03/99	901 550 00 80	**95229**	0	0	0	X
VITO W 638 (96-) 112 CDI	D	OM611.960	M	+		03/99 ➧	901 550 00 80	**95229**	0	0	0	X
VITO W 638 (96-) 112 CDI	D	OM611.960	A	+		03/99 ➧	901 550 00 80	**95229**	0	0	0	X
VITO W 638 (96-) 113	G	M111.948	M/A	+		02/96 ➧ 03/99	901 550 00 80	**95229**	0	0	0	X

DRYERS

	G/D			AC	Note		OE	Nissens	Dim. H	Dim. W	Dim. T	Mat.
MERCEDES LIGHT VAN (../..)												
VITO W 638 (96-) 113	G	M111.948	M	+		03/99 ➧ 07/03	901 550 00 80	**95229**	0	0	0	X
VITO W 638 (96-) 113	G	M111.948	A	+/-		03/99 ➧ 07/03	901 550 00 80	**95229**	0	0	0	X
VITO W 638 (96-) 114	G	M111.978	M/A	+		02/96 ➧ 03/99	901 550 00 80	**95229**	0	0	0	X
VITO W 638 (96-) 114	G	M111.978	M	+		03/99 ➧ 07/03	901 550 00 80	**95229**	0	0	0	X
VITO W 638 (96-) 114	G	M111.978	A	+/-		03/99 ➧ 07/03	901 550 00 80	**95229**	0	0	0	X
VITO W 639 (03-) 2.0 CDI	D	OM646	M	+/-		09/03 ➧	639 835 05 47	**95358**	0	0	0	X
VITO W 639 (03-) 2.2 CDI	D	OM646	M	+/-		09/03 ➧	639 835 05 47	**95358**	0	0	0	X
VITO W 639 (03-) 3.2 i V6	G	M112	M	+/-		09/03 ➧	639 835 05 47	**95358**	0	0	0	X
MITSUBISHI LIGHT VAN												
PAJERO (90-) 2.4 i	G	4G64	M	+/-		12/90 ➧	MB657527 +	**95065**	0	0	0	X
PAJERO (90-) 2.5 TD	D	4D56T	M	+/-		12/90 ➧ 10/93	MB657527 +	**95065**	0	0	0	X
PAJERO (90-) 2.6 i 12V	G	4G54	M	+/-		08/93 ➧	MB918516 +	**95046**	0	0	0	X
PAJERO (90-) 2.6 i 12V	G	4G54	M	+/-		12/90 ➧ 07/93	MB657527 +	**95065**	0	0	0	X
PAJERO (90-) 2.8 TD	D	4M40	M	+/-	JAPAN	07/93 ➧	MB918516 +	**95046**	0	0	0	X
PAJERO (90-) 2.8 TD	D	4M40	A	+/-	JAPAN	07/93 ➧	MB918516 +	**95046**	0	0	0	X
PAJERO (90-) 2.8 TD	D	4M40T	M	+/-		07/93 ➧	MB918516 +	**95046**	0	0	0	X
PAJERO (90-) 2.8 TD	D	4M40T	A	+/-		07/93 ➧	MB918516 +	**95046**	0	0	0	X
PAJERO (90-) 3.0 i	G	6G72	M	+/-		12/90 ➧ 05/94	MB657527 +	**95065**	0	0	0	X
SHOGUN (90-) 2.4 i	G	4G64	M	+/-		12/90 ➧	MB657527 +	**95065**	0	0	0	X
SHOGUN (90-) 2.5 TD	D	4D56T	M	+/-		12/90 ➧ 10/93	MB657527 +	**95065**	0	0	0	X
SHOGUN (90-) 2.6 i 12V	G	4G54	M	+/-		08/93 ➧	MB918516 +	**95046**	0	0	0	X
SHOGUN (90-) 2.6 i 12V	G	4G54	M	+/-		12/90 ➧ 07/93	MB657527 +	**95065**	0	0	0	X
SHOGUN (90-) 2.8 TD	D	4M40	M	+/-	JAPAN	07/93 ➧	MB918516 +	**95046**	0	0	0	X
SHOGUN (90-) 2.8 TD	D	4M40	A	+/-	JAPAN	07/93 ➧	MB918516 +	**95046**	0	0	0	X
SHOGUN (90-) 2.8 TD	D	4M40T	M	+/-		07/93 ➧	MB918516 +	**95046**	0	0	0	X
SHOGUN (90-) 2.8 TD	D	4M40T	A	+/-		07/93 ➧	MB918516 +	**95046**	0	0	0	X
SHOGUN (90-) 3.0 i	G	6G72	M	+/-		12/90 ➧ 05/94	MB657527 +	**95065**	0	0	0	X
NISSAN LIGHT VAN												
KUBISTAR (03-) 1.2 i	G	D7F	M	+		08/03 ➧		**95241**	0	0	0	X
KUBISTAR (03-) 1.6 i 16V	G	K4M	M	+		08/03 ➧		**95241**	0	0	0	X
KUBISTAR (03-) 1.9 D	D	F8Q	M	+		08/03 ➧		**95241**	0	0	0	X
KUBISTAR (03-) 1.9 dCi	D	F9Q	M	+/-		08/03 ➧		**95241**	0	0	0	X
PATROL (79-) 2.8	G	2.4 RB 30 S	M	+/-		11/79 ➧	110.673.3F +	**95291**	0	0	0	X
PATROL (79-) 3.3 D	G	2.4 RB 30 S	M	+/-		11/79 ➧	110.673.3F +	**95291**	0	0	0	X
PATROL (79-) 3.3 TD	G	2.4 RB 30 S	M	+/-		11/79 ➧	110.673.3F +	**95291**	0	0	0	X
VANETTE (86-)				+			790.310.050F	**95292**	0	0	0	X
OPEL LIGHT VAN												
ARENA (98-) 2.5 D	D	S8U	M	-		10/98 ➧		**95031**	0	0	0	X
ARENA (98-) 2.8 dTi	D	S9W	M	+		10/98 ➧ 01/03		**95031**	0	0	0	X
COMBO (93-) 1.2 i	G	C12NZ	M	+		03/93 ➧ 09/00	1618 016 +	**95057**	0	0	0	X
COMBO (93-) 1.2 i	G	X12SZ	M	+		03/93 ➧ 09/00	1618 016 +	**95057**	0	0	0	X
COMBO (93-) 1.4 i	G	C14NZ	M	+		03/93 ➧ 09/00	1618 016 +	**95057**	0	0	0	X
COMBO (93-) 1.4 i	G	X14SZ	M	+		03/93 ➧ 09/00	1618 016 +	**95057**	0	0	0	X
COMBO (93-) 1.4 i 16V	G	X14XE	M	+		03/93 ➧ 09/00	1618 016 +	**95057**	0	0	0	X
COMBO (93-) 1.7 D	D	17D	M	+/-		03/96 ➧ 09/00	1618 016 +	**95057**	0	0	0	X
COMBO (93-) 1.7 D	D	X17D	M	+/-		03/96 ➧ 09/00	1618 016 +	**95057**	0	0	0	X

DRYERS

	G/D			AC	Note		OE	Nissens	Dim. H	Dim. W	Dim. T	Mat.
OPEL LIGHT VAN (../..)												
COMBO (00-) 1.2 i 16V	G	Z12XE	M	+/-		09/00 ➧	1848 000	**95321**	0	0	0	X
COMBO (00-) 1.3 DTi	D	Y13DT	M	+		10/04 ➧	1848 000	**95321**	0	0	0	X
COMBO (00-) 1.3 DTi	D	Z13DT	M	+		10/04 ➧	1848 000	**95321**	0	0	0	X
COMBO (00-) 1.4 i 16V	G	Z14XE	M	+/-		09/00 ➧	1848 000	**95321**	0	0	0	X
COMBO (00-) 1.7 DTi	D	Y17DT	M	+/-		09/00 ➧	1848 000	**95321**	0	0	0	X
COMBO (00-) 1.7 DTi	D	Y17DTL	M	+/-		09/00 ➧	1848 000	**95321**	0	0	0	X
COMBO (00-) 1.7 DTi	D	Z17DTH	M	+/-		09/00 ➧	1848 000	**95321**	0	0	0	X
FRONTERA A (92-) 2.0 i	G	X20SE	M	+/-		10/94 ➧ 08/98	1848 027	**95029**	0	0	0	X
FRONTERA A (92-) 2.2 i	G	X22SE	M	+/-		10/94 ➧ 08/98	1848 027	**95029**	0	0	0	X
FRONTERA A (92-) 2.8 TD	D	28TD	M	+/-		10/94 ➧ 09/98	1848 027	**95029**	0	0	0	X
MOVANO (98-) 2.5 D	D	S8U	M	-		10/98 ➧		**95031**	0	0	0	X
MOVANO (98-) 2.8 dTi	D	S9W	M	+		10/98 ➧ 01/03		**95031**	0	0	0	X
PEUGEOT LIGHT VAN												
BOXER (94-) 1.9 D	D	XUD9AU	M	+/-		02/94 ➧ 01/02	6455.T4	**95105**	0	0	0	X
BOXER (94-) 1.9 TD	D	XUD9UTF	M	+/-		02/94 ➧ 01/02	6455.T4	**95105**	0	0	0	X
BOXER (94-) 2.0	G	XU102C	M	+/-	TROPIC	02/94 ➧ 01/02	6455.T4	**95105**	0	0	0	X
BOXER (94-) 2.0	G	XU10J2U	M	+		02/94 ➧ 01/02	6455.T4	**95105**	0	0	0	X
BOXER (94-) 2.5 D	D	DJ5	M	+		02/94 ➧ 01/02	6455.T4	**95105**	0	0	0	X
BOXER (94-) 2.5 TD	D	DJ5T	M	+		02/94 ➧ 01/02	6455.T4	**95105**	0	0	0	X
BOXER (94-) 2.8 D	D	SOFIM	M	+/-		02/94 ➧ 01/02	6455.T4	**95105**	0	0	0	X
BOXER (94-) 2.8 HDi	D	8140-43	M	+/-		02/94 ➧ 01/02	6455.T4	**95105**	0	0	0	X
BOXER (94-) 2.8 TD	D	8140-43/63	M	+/-		02/94 ➧ 01/02	6455.T4	**95105**	0	0	0	X
BOXER (02-) 2.0 HDi	D	DW10TD	M	+		01/02 ➧	46527180 +	**95170**	0	0	0	X
BOXER (02-) 2.0 i	G	XU10J2	M	+/-		01/02 ➧	46527180 +	**95170**	0	0	0	X
BOXER (02-) 2.2 HDi	D	DW12TED	M	+		01/02 ➧	46527180 +	**95170**	0	0	0	X
BOXER (02-) 2.8 HDi	D	8140-43S	M	+		01/02 ➧	46527180 +	**95170**	0	0	0	X
E7 - EUROCAB 2.0 HDi	D	DW10BTED	M	+/-		01/01 ➧	6455.Q7	**95010**	0	0	0	X
EXPERT (95-) 1.6 i	G	SPI	M	+		10/95 ➧	6455.Q7	**95010**	0	0	0	X
EXPERT (95-) 1.8 i	G	XU7JP	M	+		07/96 ➧	6455.Q7	**95010**	0	0	0	X
EXPERT (95-) 1.9 D	D	DW8	M	+		05/98 ➧	6455.Q7	**95010**	0	0	0	X
EXPERT (95-) 1.9 D	D	XUD9A	M	+		10/95 ➧	6455.Q7	**95010**	0	0	0	X
EXPERT (95-) 1.9 TD	D	XUDTE	M	+/-		10/95 ➧	6455.Q7	**95010**	0	0	0	X
EXPERT (95-) 2.0 HDi	D	DW10ATED	M	+/-		09/00 ➧	6455.Q7	**95010**	0	0	0	X
EXPERT (95-) 2.0 i 16V	G	EW10J4	M	+		09/00 ➧	6455.Q7	**95010**	0	0	0	X
EXPERT (95-) 2.1 TD	D	XUD11ATE	M	+/-		10/95 ➧	6455.Q7	**95010**	0	0	0	X
PARTNER (96-) 1.1 i	G	TU1M	M	+		07/96 ➧	6453.P8 +	**95011**	0	0	0	X
PARTNER (96-) 1.1 i	G	TU1M	M	+		07/96 ➧	6455.X8 +	**95109**	0	0	0	X
PARTNER (96-) 1.4 i	G	TU3JP	M	+/-		07/96 ➧ 10/98	6453.P8 +	**95011**	0	0	0	X
PARTNER (96-) 1.4 i	G	TU3JP	M	+/-		11/98 ➧	6453.P8 +	**95011**	0	0	0	X
PARTNER (96-) 1.6 i	G	TU5JP	M	+/-		07/96 ➧	6453.P8 +	**95011**	0	0	0	X
PARTNER (96-) 1.6 i 16V	G	TU5JP4	M	+/-		11/98 ➧	6453.P8 +	**95011**	0	0	0	X
PARTNER (96-) 1.8 D	D	XUD7	M	+		06/96 ➧ 10/98	6453.P8 +	**95011**	0	0	0	X
PARTNER (96-) 1.8 D	D	XUD7	M	+		10/98 ➧	6453.P8 +	**95011**	0	0	0	X
PARTNER (96-) 1.8 i	G	XU7JB	M	+/-		07/97 ➧ 10/98	6453.P8 +	**95011**	0	0	0	X
PARTNER (96-) 1.8 i	G	XU7JB	M	+/-		11/98 ➧	6453.P8 +	**95011**	0	0	0	X
PARTNER (96-) 1.9 D	D	XUD9,DW8, DW8B	M	+		06/96 ➧ 10/98	6453.P8 +	**95011**	0	0	0	X
PARTNER (96-) 1.9 D	D	XUD9,DW8, DW8B	M	+		11/98 ➧	6453.P8 +	**95011**	0	0	0	X
PARTNER (96-) 2.0 HDi	D	DW10TD	M	+/-		01/00 ➧	6453.P8 +	**95011**	0	0	0	X

DRYERS

	G/D			AC	Note		OE		Nissens	Dim. H	W	T	Mat.
PEUGEOT LIGHT VAN (../..)													
PARTNER (02-) 1.1 i	G	TU1JP	M	+/-		11/02 ▸	6455.AH	+	**95346**	0	0	0	X
PARTNER (02-) 1.1 i	G	TU1JP	M	+/-		11/02 ▸	6455.AH	+	**95346**	0	0	0	X
PARTNER (02-) 1.4 i	G	TU3JP	M	+/-		11/02 ▸	6455.AH	+	**95346**	0	0	0	X
PARTNER (02-) 1.4 i	G	TU3JP	M	+/-		11/02 ▸	6455.AH	+	**95346**	0	0	0	X
PARTNER (02-) 1.6 HDI	D	DV6B	M	+/-		11/02 ▸	6455.AH	+	**95346**	0	0	0	X
PARTNER (02-) 1.6 HDI 16V	D	DV6TED4	M	+/-		11/02 ▸	6455.AH	+	**95346**	0	0	0	X
PARTNER (02-) 1.6 i 16V	G	TU5JP4	M	+/-		11/02 ▸	6455.AH	+	**95346**	0	0	0	X
PARTNER (02-) 1.6 i 16V	G	TU5JP4	M	+/-		11/02 ▸	6455.AH	+	**95346**	0	0	0	X
PARTNER (02-) 1.9 D	D	DW8B	M	+/-		11/02 ▸	6455.AH	+	**95346**	0	0	0	X
PARTNER (02-) 2.0 HDi	D	DW10TD	M	+/-		11/02 ▸	6455.AH	+	**95346**	0	0	0	X
PONTIAC LIGHT VAN													
G6 (05-) 1.9 CDTi	D		M	+/-		01/05 ▸	24418371		**95339**	0	0	0	X
G6 (05-) 1.9 CDTi	D		A	+/-		01/05 ▸	24418371		**95339**	0	0	0	X
G6 (05-) 2.0 i 16V TURBO	G		M	+/-		01/05 ▸	1848 044	+	**95338**	0	0	0	X
G6 (05-) 2.0 i 16V TURBO	G		A	+/-		01/05 ▸	24418371		**95339**	0	0	0	X
RENAULT LIGHT VAN													
EXPRESS (91-) 1.4	G	E6J	M	+		09/91 ▸	77 00 272 365		**95035**	0	0	0	X
EXPRESS (91-) 1.4 i	G	E7J	M	+		09/91 ▸	77 00 272 365		**95035**	0	0	0	X
EXTRA (85-)				+		11/85 ▸ 08/91	77 00 272 365		**95035**	0	0	0	X
EXTRA (91-) 1.4	G	E6J	M	+		09/91 ▸	77 00 272 365		**95035**	0	0	0	X
EXTRA (91-) 1.4 i	G	E7J	M	+		09/91 ▸	77 00 272 365		**95035**	0	0	0	X
KANGOO (98-) 1.2 i	G	D7F	M	+		01/98 ▸	77 00 836 314		**95241**	0	0	0	X
KANGOO (98-) 1.2 i 16V	G	D4D	M	+		01/98 ▸	77 00 836 314		**95241**	0	0	0	X
KANGOO (98-) 1.2 i 16V	G	D4F	M	+		01/98 ▸ 02/03	77 00 836 314		**95241**	0	0	0	X
KANGOO (98-) 1.4 i	G	E7J	M	+		01/98 ▸	77 00 836 314		**95241**	0	0	0	X
KANGOO (98-) 1.5 dCi	D	K9K	M	+		09/02 ▸ 03/03	77 00 836 314		**95241**	0	0	0	X
KANGOO (98-) 1.5 dCi	D	K9K	M	+		10/01 ▸ 09/02	77 00 836 314		**95241**	0	0	0	X
KANGOO (98-) 1.6 i	D	K7M	M	+/-		12/99 ▸	77 00 836 314		**95241**	0	0	0	X
KANGOO (98-) 1.6 i 16V	G	K4M	M/A	+		01/02 ▸	77 00 836 314		**95241**	0	0	0	X
KANGOO (98-) 1.9 D	D	F8Q	M	+		09/97 ▸	77 00 836 314		**95241**	0	0	0	X
KANGOO (98-) 1.9 dCi	D	F9Q	M	+/-		01/02 ▸	77 00 836 314		**95241**	0	0	0	X
KANGOO (98-) 1.9 dTi	G	F9Q	M	+		12/99 ▸ 03/00	77 00 836 314		**95241**	0	0	0	X
MASTER (98-) 2.5 D	D	S8U	M	+/-		09/97 ▸	77 00 841 978		**95031**	0	0	0	X
MASTER (98-) 2.8 dTi	D	S9W	M	+		09/98 ▸ 01/03	77 00 841 978		**95031**	0	0	0	X
RAPID (85-)				+		11/85 ▸ 08/91	77 00 272 365		**95035**	0	0	0	X
RAPID (91-) 1.4	G	E6J	M	+		09/91 ▸	77 00 272 365		**95035**	0	0	0	X
RAPID (91-) 1.4 i	G	E7J	M	+		09/91 ▸	77 00 272 365		**95035**	0	0	0	X
TOYOTA LIGHT VAN													
4 RUNNER (85-) 2.4 i	G	22RE	M	-	RN 10#	08/88 ▸ 01/95	88471-16040		**95065**	0	0	0	X
4 RUNNER (85-) 2.4 i	G	22RE	M	-	RN 11#	08/88 ▸ 01/95	88471-16040		**95065**	0	0	0	X
4 RUNNER (85-) 2.4 i	G	22RE	M	+/-	RN 13#	08/88 ▸ 01/95	88471-16040		**95065**	0	0	0	X
4 RUNNER (85-) 3.0 i	G	3VZE	M	+/-	VZN 10#	08/89 ▸ 11/95	88471-16040		**95065**	0	0	0	X
4 RUNNER (85-) 3.0 i	G	3VZE	M	+/-	VZN 11#	08/89 ▸ 11/95	88471-16040		**95065**	0	0	0	X
4 RUNNER (85-) 3.0 i	G	3VZE	M	+/-	VZN 13#	08/89 ▸ 11/95	88471-16040		**95065**	0	0	0	X
4 RUNNER (95-) 2.7 i	G	3RZFE	M	+/-	RZN 18#	11/95 ▸ 08/00	88471-34010		**95063**	0	0	0	X
4 RUNNER (95-) 2.7 i	G	3RZFE	A	+/-	RZN 18#	11/95 ▸ 08/00	88471-34010		**95063**	0	0	0	X

DRYERS

	G/D			AC	Note		OE	Nissens	Dim. H	Dim. W	Dim. T	Mat.
TOYOTA LIGHT VAN (../..)												
4 RUNNER (95-) 3.4 i	G	5VZFE	M	+/-	VZN 18#	11/95 ➧ 08/00	88471-34010	**95063**	0	0	0	X
4 RUNNER (95-) 3.4 i	G	5VZFE	A	+/-	VZN 18#	11/95 ➧ 08/00	88471-34010	**95063**	0	0	0	X
DYNA (00-) 4.0 D	D	W04D	M	+/-	WU 410	08/02 ➧	88471-20050	**95063**	0	0	0	X
DYNA (00-) 4.0 D	D	W04D	M	+/-	WU 420	12/02 ➧	88471-20050	**95063**	0	0	0	X
DYNA (00-) 4.1 TD	D	15BFTE	M	+/-	XZU 340	07/99 ➧	88471-20050	**95063**	0	0	0	X
DYNA (00-) 4.1 TD	D	15BFTE	M	+/-	XZU 320	07/99 ➧	88471-20050	**95063**	0	0	0	X
DYNA (00-) 4.1 TD	D	15BFTE	M	+/-	XZU 330	07/99 ➧	88471-20050	**95063**	0	0	0	X
DYNA (00-) 4.1 TD	D	15BFTE	M	+/-	XZU 300	07/99 ➧	88471-20050	**95063**	0	0	0	X
DYNA (00-) 4.1 TD	D	15BFTE	M	+/-	BU 410	08/03 ➧	88471-20050	**95063**	0	0	0	X
DYNA (00-) 4.1 TD	D	15BFTE	M	+/-	BU 420	08/03 ➧	88471-20050	**95063**	0	0	0	X
DYNA (00-) 4.6 D	D	S05C	M	+/-	XZU 302	07/99 ➧	88471-20050	**95063**	0	0	0	X
DYNA (00-) 4.6 D	D	S05C	M	+/-	XZU 307	07/99 ➧	88471-20050	**95063**	0	0	0	X
DYNA (00-) 4.6 D	D	S05C	M	+/-	XZU 342	07/99 ➧	88471-20050	**95063**	0	0	0	X
DYNA (00-) 4.6 D	D	S05C	M	+/-	XZU 402	10/00 ➧	88471-20050	**95063**	0	0	0	X
DYNA (00-) 4.6 D	D	S05C	M	+/-	XZU 41#	10/00 ➧	88471-20050	**95063**	0	0	0	X
DYNA (00-) 4.6 D	D	S05C	M	+/-	XZU 430	10/00 ➧	88471-20050	**95063**	0	0	0	X
DYNA (00-) 4.6 D	D	S05C	M	+/-	XZU 420	10/00 ➧	88471-20050	**95063**	0	0	0	X
DYNA (00-) 4.6 TD	D	S05CB	M	+/-	XZU 412	12/02 ➧	88471-20050	**95063**	0	0	0	X
DYNA (00-) 4.6 TD	D	S05CB	M	+/-	XZU 422	12/02 ➧	88471-20050	**95063**	0	0	0	X
DYNA (00-) 4.6 TD	D	S05CT#	M	+/-	XZU 404	10/01 ➧	88471-20050	**95063**	0	0	0	X
DYNA (00-) 4.6 TD	D	S05CT#	M	+/-	XZU 41#	10/01 ➧	88471-20050	**95063**	0	0	0	X
DYNA (00-) 4.6 TD	D	S05CT#	M	+/-	XZU 422	10/01 ➧	88471-20050	**95063**	0	0	0	X
DYNA (00-) 4.9 D	D	S05D	M	+/-	XZU 402	10/00 ➧	88471-20050	**95063**	0	0	0	X
DYNA (00-) 4.9 D	D	S05D	M	+/-	XZU 41#	10/00 ➧	88471-20050	**95063**	0	0	0	X
DYNA (00-) 4.9 D	D	S05D	M	+/-	XZU 420	10/00 ➧	88471-20050	**95063**	0	0	0	X
DYNA (00-) 4.9 D	D	S05D	M	+/-	XZU 430	10/00 ➧	88471-20050	**95063**	0	0	0	X
DYNA (00-) 5.3 D	D	J05C	M	+/-	XZU 420	04/03 ➧	88471-20050	**95063**	0	0	0	X
DYNA (00-) 5.3 D	D	J05C	M	+/-	XZU 430	04/03 ➧	88471-20050	**95063**	0	0	0	X
DYNA (00-) 5.3 D	D	J05C	M	+/-	XZU 402	10/00 ➧	88471-20050	**95063**	0	0	0	X
DYNA (00-) 5.3 D	D	J05C	M	+/-	XZU 41#	10/00 ➧	88471-20050	**95063**	0	0	0	X
DYNA (00-) 5.3 D	D	J05C	M	+/-	XZU 420	10/00 ➧	88471-20050	**95063**	0	0	0	X
DYNA (00-) 5.3 D	D	J05C	M	+/-	XZU 430	10/00 ➧	88471-20050	**95063**	0	0	0	X
DYNA 150 (95-) 2.8 D	D	3L	M	+/-	LY 21#	05/95 ➧ 10/01	88471-20050	**95063**	0	0	0	X
DYNA 150 (95-) 3.0 D	D	5L	M	+/-	LY 21#	05/95 ➧ 10/01	88471-20050	**95063**	0	0	0	X
DYNA 150 (01-) 2.5 TD	D	2KDFTV	M	+/-	KDY 2##	08/01 ➧	88471-20050	**95063**	0	0	0	X
DYNA 150 (01-) 3.0 D	D	5L	M	+/-	LY 220	08/01 ➧	88471-20050	**95063**	0	0	0	X
DYNA 150 (01-) 3.0 D	D	5L	M	+/-	LY 230	08/01 ➧	88471-20050	**95063**	0	0	0	X
DYNA 150 (01-) 3.0 D	D	5L	M	+/-	LY 225	08/01 ➧	88471-20050	**95063**	0	0	0	X
DYNA 150 (01-) 3.0 D	D	5L	M	+/-	LY 235	08/01 ➧	88471-20050	**95063**	0	0	0	X
DYNA 200 (95-) 3.7 D	D	14B	M	-	BU 10#	05/95 ➧ 09/00	88471-20050	**95063**	0	0	0	X
DYNA 200 (95-) 3.7 D	D	14B	M	-	BU 10#	05/95 ➧ 09/00	88471-20050	**95063**	0	0	0	X
DYNA 200 (95-) 3.7 D	D	14B	M	-	BU 11#	05/95 ➧ 09/00	88471-20050	**95063**	0	0	0	X
DYNA 200 (95-) 3.7 D	D	14B	M	-	BU 11#	05/95 ➧ 09/00	88471-20050	**95063**	0	0	0	X
DYNA 200 (95-) 4.1 TD	D	15BF	M	-	BU 10#	05/95 ➧ 09/00	88471-20050	**95063**	0	0	0	X
DYNA 200 (95-) 4.1 TD	D	15BF	M	-	BU 10#	05/95 ➧ 09/00	88471-20050	**95063**	0	0	0	X
DYNA 200 (95-) 4.1 TD	D	15BF	M	-	BU 11#	05/95 ➧ 09/00	88471-20050	**95063**	0	0	0	X
DYNA 200 (95-) 4.1 TD	D	15BF	M	-	BU 11#	05/95 ➧ 09/00	88471-20050	**95063**	0	0	0	X
HI-LUX (88-) 2.2	G	4Y	M	+/-	YN 11#	08/88 ➧ 08/94	88471-16040	**95065**	0	0	0	X
HI-LUX (88-) 2.4 D	D	2L	M	+/-	LN 8#	01/89 ➧ 04/96	88471-16040	**95065**	0	0	0	X
HI-LUX (88-) 2.4 D	D	2L	M	+/-	LN 9#	08/88 ➧ 04/96	88471-16040	**95065**	0	0	0	X

DRYERS

	G/D			AC	Note		OE	Nissens	Dim. H	Dim. W	Dim. T	Mat.
TOYOTA LIGHT VAN (../..)												
HI-LUX (88-) 2.4 D	D	2L	M	+/-	LN 10#	08/88 ➧ 04/96	88471-16040	**95065**	0	0	0	X
HI-LUX (88-) 2.4 D	D	2L	M	+/-	LN 11#	08/88 ➧ 04/96	88471-16040	**95065**	0	0	0	X
HI-LUX (88-) 2.8 D	D	3L	M	+/-	LN 8#	08/88 ➧ 04/96	88471-16040	**95065**	0	0	0	X
HI-LUX (88-) 2.8 D	D	3L	M	+/-	LN 9#	08/88 ➧ 04/96	88471-16040	**95065**	0	0	0	X
HI-LUX (88-) 2.8 D	D	3L	M	+/-	LN 13#	08/88 ➧ 04/96	88471-16040	**95065**	0	0	0	X
HI-LUX (88-) 2.8 D	D	3L	M	+/-	LN 11#	08/88 ➧ 08/89	88471-16040	**95065**	0	0	0	X
HI-LUX (88-) 2.8 D	D	3L	M	+/-	LN 10#	08/88 ➧ 08/90	88471-16040	**95065**	0	0	0	X
HI-LUX (88-) 3.0 i	G	3VZE	M	+/-	VZN 13#	08/89 ➧ 11/95	88471-16040	**95065**	0	0	0	X
HI-LUX (88-) 3.0 i	G	3VZE	M	+/-	VZN 10#	08/89 ➧ 11/95	88471-16040	**95065**	0	0	0	X
HI-LUX (88-) 3.0 i	G	3VZE	M	+/-	VZN 11#	08/89 ➧ 11/95	88471-16040	**95065**	0	0	0	X
HI-LUX (97-) 2.4 D	D	2L	M	+/-	LN 1##	08/97 ➧ 08/01	88471-20050	**95063**	0	0	0	X
HI-LUX (97-) 2.4 TD	D	2LT	M	+/-	LN 1##	08/97 ➧ 08/01	88471-20050	**95063**	0	0	0	X
HI-LUX (97-) 2.4 TD	D	2LT	M	+/-	KDN 1##	08/97 ➧ 08/01	88471-20050	**95063**	0	0	0	X
HI-LUX (97-) 2.4 TD	D	2LT	M	+/-	LN ##	08/97 ➧ 08/01	88471-20050	**95063**	0	0	0	X
HI-LUX (97-) 2.4 TD	D	2LT	M	+/-	RZN 16#	08/97 ➧ 08/01	88471-20050	**95063**	0	0	0	X
HI-LUX (97-) 2.4 TD	D	2LT	M	+/-	RZN 17#	08/97 ➧ 08/01	88471-20050	**95063**	0	0	0	X
LAND CRUISER 100 (98-) 4.2 D	D	1HZ	M	+/-	HZJ 105	01/98 ➧	88474-47010	**95351**	0	0	0	X
LAND CRUISER 100 (98-) 4.2 D	D	1HZ	A	+/-	HZJ 105	01/98 ➧	88474-47010	**95351**	0	0	0	X
LAND CRUISER 100 (98-) 4.2 TD	D	1HDFTE	M	+/-	HDJ 100	08/00 ➧ 08/02	88474-47010	**95351**	0	0	0	X
LAND CRUISER 100 (98-) 4.2 TD	D	1HDFTE	A	+/-	HDJ 100	08/00 ➧ 08/02	88474-47010	**95351**	0	0	0	X
LAND CRUISER 100 (98-) 4.2 TD	D	1HDT	M	+/-	HDJ 100	01/98 ➧ 08/02	88474-47010	**95351**	0	0	0	X
LAND CRUISER 100 (98-) 4.2 TD	D	1HDT	A	+/-	HDJ 100	01/98 ➧ 08/02	88474-47010	**95351**	0	0	0	X
LAND CRUISER 100 (98-) 4.5	G	1FZFE	M	+/-	FZJ 100	01/98 ➧	88474-47010	**95351**	0	0	0	X
LAND CRUISER 100 (98-) 4.5	G	1FZFE	M	+/-	FZJ 105	01/98 ➧	88474-47010	**95351**	0	0	0	X
LAND CRUISER 100 (98-) 4.5	G	1FZFE	A	+/-	FZJ 100	01/98 ➧	88474-47010	**95351**	0	0	0	X
LAND CRUISER 100 (98-) 4.5	G	1FZFE	A	+/-	FZJ 105	01/98 ➧	88474-47010	**95351**	0	0	0	X
LAND CRUISER 100 (98-) 4.7 i V8 32V	G	2UZFE	M/A	+/-	UZJ 100	01/98 ➧	88474-47010	**95351**	0	0	0	X
LAND CRUISER 100 (98-) 4.7 i V8 32V	G	2UZFE	M	+/-	UZJ 100	01/98 ➧	88474-47010	**95351**	0	0	0	X
LAND CRUISER 80 (90-)				+	FJ 80	01/90 ➧ 05/93	88471-16040	**95065**	0	0	0	X
LAND CRUISER 80 (90-)				+	FZJ 80	01/90 ➧ 05/93	88471-16040	**95065**	0	0	0	X
LAND CRUISER 80 (90-)				+	HDJ 80	01/90 ➧ 05/93	88471-16040	**95065**	0	0	0	X
LAND CRUISER 80 (90-)				+	HZJ 80	01/90 ➧ 05/93	88471-16040	**95065**	0	0	0	X
LAND CRUISER 80 (94-)				+	FZJ 80	05/94 ➧	88471-16040	**95065**	0	0	0	X
LAND CRUISER 80 (94-)				+	HDJ 80	05/94 ➧	88471-16040	**95065**	0	0	0	X
LAND CRUISER 80 (94-)				+	HZJ 80	05/94 ➧	88471-16040	**95065**	0	0	0	X
LAND CRUISER 90 (96-) 3.0 TD	D	1KDFTV	M	+/-	KZJ 9#	04/96 ➧ 09/02	88471-34010	**95063**	0	0	0	X
LAND CRUISER 90 (96-) 3.0 TD	D	1KDFTV	M	+/-	KDJ 9#	04/96 ➧ 09/02	88471-34010	**95063**	0	0	0	X
LAND CRUISER 90 (96-) 3.0 TD	D	1KDFTV	A	+/-	KDJ 9#	04/96 ➧ 09/02	88471-34010	**95063**	0	0	0	X
LAND CRUISER 90 (96-) 3.0 TD	D	1KDFTV	A	+/-	KZJ 9#	04/96 ➧ 09/02	88471-34010	**95063**	0	0	0	X
LAND CRUISER 90 (96-) 3.0 TD	D	1KZTE	M	+/-	KZJ 9#	04/96 ➧ 09/02	88471-34010	**95063**	0	0	0	X
LAND CRUISER 90 (96-) 3.0 TD	D	1KZTE	M	+/-	KDJ 9#	04/96 ➧ 09/02	88471-34010	**95063**	0	0	0	X
LAND CRUISER 90 (96-) 3.0 TD	D	1KZTE	A	+/-	KDJ 9#	04/96 ➧ 09/02	88471-34010	**95063**	0	0	0	X
LAND CRUISER 90 (96-) 3.0 TD	D	1KZTE	A	+/-	KZJ 9#	04/96 ➧ 09/02	88471-34010	**95063**	0	0	0	X
LAND CRUISER 90 (96-) 3.4 i	G	5VZFE	M	+/-	VZJ 9#	04/96 ➧ 09/02	88471-34010	**95063**	0	0	0	X
LAND CRUISER 90 (96-) 3.4 i	G	5VZFE	A	+/-	VZJ 9#	04/96 ➧ 09/02	88471-34010	**95063**	0	0	0	X
VAUXHALL LIGHT VAN												
COMBO				+		11/93 ➧	1618 016 +	**95057**	0	0	0	X

DRYERS

	G/D			AC	Note		OE	Nissens	Dim. H	Dim. W	Dim. T	Mat.
VOLKSWAGEN LIGHT VAN												
TOUAREG (02-) 2.5 TDi	D	AHY	M/A	+/-		07/03 ➧	7L0.898.191 A	**95359**	0	0	0	X
TOUAREG (02-) 2.5 TDi	D	BAC	M/A	+/-		01/03 ➧	7L0.898.191 A	**95359**	0	0	0	X
TOUAREG (02-) 2.5 TDi	D	BLK	M/A	+/-		07/03 ➧	7L0.898.191 A	**95359**	0	0	0	X
TOUAREG (02-) 2.5 TDi	D	BPD	M/A	+/-		07/03 ➧	7L0.898.191 A	**95359**	0	0	0	X
TOUAREG (02-) 2.5 TDi	D	BPE	M/A	+/-		07/03 ➧	7L0.898.191 A	**95359**	0	0	0	X
TOUAREG (02-) 3.0 TDi	G	BKS	M/A	+/-		11/04 ➧	7L0.898.191 A	**95359**	0	0	0	X
TOUAREG (02-) 3.2 i V6	G	AZZ	M/A	+/-		11/02 ➧ 05/04	7L0.898.191 A	**95359**	0	0	0	X
TOUAREG (02-) 3.2 i V6	G	BKJ	M/A	+/-		05/03 ➧ 05/04	7L0.898.191 A	**95359**	0	0	0	X
TOUAREG (02-) 3.2 i V6	G	BMV	M/A	+/-		05/04 ➧	7L0.898.191 A	**95359**	0	0	0	X
TOUAREG (02-) 3.2 i V6	G	BMX	M/A	+/-		05/04 ➧	7L0.898.191 A	**95359**	0	0	0	X
TOUAREG (02-) 3.2 i V6	G	BRJ	M/A	+/-		05/04 ➧	7L0.898.191 A	**95359**	0	0	0	X
TOUAREG (02-) 3.2 i V6	G	BAA	A	+/-		08/03 ➧ 05/04	7L0.898.191 A	**95359**	0	0	0	X
TOUAREG (02-) 3.6 FSI	G	BHK	M/A	+/-		05/04 ➧	7L0.898.191 A	**95359**	0	0	0	X
TOUAREG (02-) 3.6 FSI	G	BHL	M/A	+/-		05/04 ➧	7L0.898.191 A	**95359**	0	0	0	X
TOUAREG (02-) 4.2 i V8 40V	G	AXQ	A	+/-		12/02 ➧	7L0.898.191 A	**95359**	0	0	0	X
TOUAREG (02-) 5.0 TDi	D	AYH	A	+/-		11/02 ➧	7L0.898.191 A	**95359**	0	0	0	X
TOUAREG (02-) 5.0 TDi	D	BLE	A	+/-		11/04 ➧	7L0.898.191 A	**95359**	0	0	0	X
TOUAREG (02-) 5.0 TDi	D	BWF	A	+/-		11/04 ➧	7L0.898.191 A	**95359**	0	0	0	X
TOUAREG (02-) 6.0 WR12	G	BJN	A	+/-		08/04 ➧	7L0.898.191 A	**95359**	0	0	0	X
TOURAN (03-) 1.6 FSI	G	BAG	M	+	HD	02/03 ➧	1K0.298.403 A	**95366**	0	0	0	X
TOURAN (03-) 1.6 FSI	G	BAG	M	+/-		02/03 ➧	1K0.298.403 A	**95366**	0	0	0	X
TOURAN (03-) 1.6 FSI	G	BAG	A	+/-		02/03 ➧	1K0.298.403 A	**95366**	0	0	0	X
TOURAN (03-) 1.6 FSI	G	BLP	M	+	HD	02/03 ➧	1K0.298.403 A	**95366**	0	0	0	X
TOURAN (03-) 1.6 FSI	G	BLP	M	+/-		02/03 ➧	1K0.298.403 A	**95366**	0	0	0	X
TOURAN (03-) 1.6 FSI	G	BLP	A	+/-		02/03 ➧	1K0.298.403 A	**95366**	0	0	0	X
TOURAN (03-) 1.6 i 16V	G	BGU	M	+/-		02/03 ➧	1K0.298.403 A	**95366**	0	0	0	X
TOURAN (03-) 1.6 i 16V	G	BGU	A	+/-		02/03 ➧	1K0.298.403 A	**95366**	0	0	0	X
TOURAN (03-) 1.6 i 16V	G	BLF	M	+/-		02/03 ➧	1K0.298.403 A	**95366**	0	0	0	X
TOURAN (03-) 1.6 i 16V	G	BLF	A	+/-		02/03 ➧	1K0.298.403 A	**95366**	0	0	0	X
TOURAN (03-) 1.6 i 16V	G	BSE	M	+/-		02/03 ➧	1K0.298.403 A	**95366**	0	0	0	X
TOURAN (03-) 1.6 i 16V	G	BSF	M	+/-		02/03 ➧	1K0.298.403 A	**95366**	0	0	0	X
TOURAN (03-) 1.9 TDi	D	AVQ	M	+	HD	02/03 ➧	1K0.298.403 A	**95366**	0	0	0	X
TOURAN (03-) 1.9 TDi	D	AVQ	M	+/-		02/03 ➧	1K0.298.403 A	**95366**	0	0	0	X
TOURAN (03-) 1.9 TDi	D	BKC	M/A	-		02/03 ➧	1K0.298.403 A	**95366**	0	0	0	X
TOURAN (03-) 1.9 TDi	D	BKC	M/A	+		02/03 ➧	1K0.298.403 A	**95366**	0	0	0	X
TOURAN (03-) 1.9 TDi	D	BRU	M/A	-		02/03 ➧	1K0.298.403 A	**95366**	0	0	0	X
TOURAN (03-) 1.9 TDi	D	BRU	M/A	+		02/03 ➧	1K0.298.403 A	**95366**	0	0	0	X
TOURAN (03-) 2.0 FSi	G	AXW	M/A	+/-		02/03 ➧	1K0.298.403 A	**95366**	0	0	0	X
TOURAN (03-) 2.0 FSi	G	BLR	M/A	+/-		02/03 ➧	1K0.298.403 A	**95366**	0	0	0	X
TOURAN (03-) 2.0 GAS	G	BSX	M	+/-		02/03 ➧	1K0.298.403 A	**95366**	0	0	0	X
TOURAN (03-) 2.0 PD TDi	D	AZV	M/A	+		02/03 ➧	1K0.298.403 A	**95366**	0	0	0	X
TOURAN (03-) 2.0 PD TDi	D	BKD	M/A	+		02/03 ➧	1K0.298.403 A	**95366**	0	0	0	X
TOURAN (03-) 2.0 PD TDi	D	BLY	M/A	+		02/03 ➧	1K0.298.403 A	**95366**	0	0	0	X
TOURAN (03-) 2.0 PD TDi	D	BMM	M/A	+		02/03 ➧	1K0.298.403 A	**95366**	0	0	0	X
TOURAN (03-) 2.0 PD TDi	D	BMN	M/A	+		02/03 ➧	1K0.298.403 A	**95366**	0	0	0	X
TRANSPORTER T4 (90-) 1.9 TD	D	ABL	M	+/-		09/96 ➧ 06/03	7D0.820.191+	**95342**	0	0	0	X
TRANSPORTER T4 (90-) 1.9 TD	D	ABL	M	+/-		09/96 ➧ 06/03	7D0.820.191A	**95188**	0	0	0	X
TRANSPORTER T4 (90-) 1.9 TD	D	ABL	M	+/-		10/92 ➧ 06/03	7D0.820.191+	**95342**	0	0	0	X
TRANSPORTER T4 (90-) 2.0 i	G	AAC	M/A	+/-		09/90 ➧ 06/03	7D0.820.191+	**95342**	0	0	0	X
TRANSPORTER T4 (90-) 2.0 i	G	AAC	M/A	+/-		09/96 ➧ 06/03	7D0.820.191+	**95342**	0	0	0	X
TRANSPORTER T4 (90-) 2.0 i	G	AAC	M	+/-		09/90 ➧ 07/94	7D0.820.191+	**95342**	0	0	0	X

DRYERS

	G/D			AC	Note		OE	Nissens	Dim. H	Dim. W	Dim. T	Mat.
VOLKSWAGEN LIGHT VAN (../..)												
TRANSPORTER T4 (90-) 2.4 D	D	AJA	M/A	+/-		04/97 ➧ 06/03	7D0.820.191+	**95342**	0	0	0	X
TRANSPORTER T4 (90-) 2.4 D	D	AJA	M/A	+/-		04/97 ➧ 06/03	7D0.820.191+	**95342**	0	0	0	X
TRANSPORTER T4 (90-) 2.4 D	D	AAB	M	+/-		09/90 ➧ 04/98	7D0.820.191+	**95342**	0	0	0	X
TRANSPORTER T4 (90-) 2.4 D	D	AAB	M	+/-		09/96 ➧ 04/98	7D0.820.191+	**95342**	0	0	0	X
TRANSPORTER T4 (90-) 2.5 i	G	ACU	M/A	+/-		02/94 ➧ 10/96	7D0.820.191+	**95342**	0	0	0	X
TRANSPORTER T4 (90-) 2.5 i	G	AEN	M/A	+/-		05/95 ➧ 12/95	7D0.820.191+	**95342**	0	0	0	X
TRANSPORTER T4 (90-) 2.5 i	G	AET	M/A	+/-		08/96 ➧ 06/03	7D0.820.191+	**95342**	0	0	0	X
TRANSPORTER T4 (90-) 2.5 i	G	AET	M/A	+/-		08/96 ➧ 06/03	7D0.820.191+	**95342**	0	0	0	X
TRANSPORTER T4 (90-) 2.5 i	G	AEU	M/A	+/-		08/96 ➧ 06/03	7D0.820.191+	**95342**	0	0	0	X
TRANSPORTER T4 (90-) 2.5 i	G	AEU	M/A	+/-		08/96 ➧ 06/03	7D0.820.191+	**95342**	0	0	0	X
TRANSPORTER T4 (90-) 2.5 i	G	APL	M/A	+/-		05/99 ➧ 12/99	7D0.820.191+	**95342**	0	0	0	X
TRANSPORTER T4 (90-) 2.5 i	G	APL	M/A	+/-		05/99 ➧ 12/99	7D0.820.191+	**95342**	0	0	0	X
TRANSPORTER T4 (90-) 2.5 i	G	AVT	M/A	+/-		12/99 ➧ 06/03	7D0.820.191+	**95342**	0	0	0	X
TRANSPORTER T4 (90-) 2.5 i	G	AVT	M/A	+/-		12/99 ➧ 06/03	7D0.820.191+	**95342**	0	0	0	X
TRANSPORTER T4 (90-) 2.5 i	G	AAF	M/A	+/-		09/90 ➧ 12/93	7D0.820.191+	**95342**	0	0	0	X
TRANSPORTER T4 (90-) 2.5 TDi	D	ACV	M	+/-		09/95 ➧ 06/03	7D0.820.191+	**95342**	0	0	0	X
TRANSPORTER T4 (90-) 2.5 TDi	D	ACV	M	+/-		09/96 ➧ 06/03	7D0.820.191+	**95342**	0	0	0	X
TRANSPORTER T4 (90-) 2.5 TDi	D	ACV	A	+/-		05/98 ➧ 06/03	7D0.820.191+	**95342**	0	0	0	X
TRANSPORTER T4 (90-) 2.5 TDi	D	AJT	M	+/-		05/98 ➧ 06/03	7D0.820.191+	**95342**	0	0	0	X
TRANSPORTER T4 (90-) 2.5 TDi	D	AJT	M	+/-		05/98 ➧ 06/03	7D0.820.191+	**95342**	0	0	0	X
TRANSPORTER T4 (90-) 2.5 TDi	D	AUF	A	+/-		11/99 ➧ 06/03	7D0.820.191+	**95342**	0	0	0	X
TRANSPORTER T4 (90-) 2.5 TDi	D	AUF	A	+/-		11/99 ➧ 06/03	7D0.820.191+	**95342**	0	0	0	X
TRANSPORTER T4 (90-) 2.5 TDi	D	AXG	M	+/-		09/00 ➧ 06/03	7D0.820.191+	**95342**	0	0	0	X
TRANSPORTER T4 (90-) 2.5 TDi	D	AXG	M	+/-		09/00 ➧ 06/03	7D0.820.191+	**95342**	0	0	0	X
TRANSPORTER T4 (90-) 2.5 TDi	D	AYC	M/A	+/-		04/01 ➧ 06/03	7D0.820.191+	**95342**	0	0	0	X
TRANSPORTER T4 (90-) 2.5 TDi	D	AYC	M/A	+/-		04/01 ➧ 06/03	7D0.820.191+	**95342**	0	0	0	X
TRANSPORTER T4 (90-) 2.5 TDi	D	AYY	M	+/-		10/01 ➧ 06/03	7D0.820.191+	**95342**	0	0	0	X
TRANSPORTER T4 (90-) 2.5 TDi	D	AYY	M	+/-		10/01 ➧ 06/03	7D0.820.191+	**95342**	0	0	0	X
TRANSPORTER T4 (90-) 2.8 i V6	G	AMV	A	+/-		05/00 ➧ 06/03	7D0.820.191+	**95342**	0	0	0	X
TRANSPORTER T4 (90-) 2.8 i V6	G	AMV	A	+/-		05/00 ➧ 06/03	7D0.820.191+	**95342**	0	0	0	X
TRANSPORTER T4 (90-) 2.8 i VR6	G	AES	M/A	+/-		01/96 ➧ 05/00	7D0.820.191+	**95342**	0	0	0	X

EVAPORATORS

	G/D			AC	Note		OE	Nissens	Dim. H	W	T	Mat.
CITROEN LIGHT VAN												
BERLINGO (96-) 1.1 i	G	TU1M	M	+		07/96 ➧	6444.B9	**92205**	0	0	0	A/A
BERLINGO (96-) 1.4 i	G	TU3JP	M	+/-		07/96 ➧ 09/98	6444.B9	**92205**	0	0	0	A/A
BERLINGO (96-) 1.4 i	G	TU3JP	M	+/-		10/98 ➧	6444.B9	**92205**	0	0	0	A/A
BERLINGO (96-) 1.6 i	G	TU5JP	M	+/-		07/96 ➧	6444.B9	**92205**	0	0	0	A/A
BERLINGO (96-) 1.6 i 16V	G	TU5JP4	M	+/-		10/98 ➧	6444.B9	**92205**	0	0	0	A/A
BERLINGO (96-) 1.8 D	D	XUD7	M	+		06/96 ➧ 10/98	6444.B9	**92205**	0	0	0	A/A
BERLINGO (96-) 1.8 D	D	XUD7	M	+		10/98 ➧	6444.B9	**92205**	0	0	0	A/A
BERLINGO (96-) 1.8 i	G	XU7JB	M	+/-		07/97 ➧ 09/98	6444.B9	**92205**	0	0	0	A/A
BERLINGO (96-) 1.8 i	G	XU7JB	M	+/-		10/98 ➧	6444.B9	**92205**	0	0	0	A/A
BERLINGO (96-) 1.9 D	D	XUD9,DW8, DW8B	M	+		06/96 ➧ 10/98	6444.B9	**92205**	0	0	0	A/A
BERLINGO (96-) 1.9 D	D	XUD9,DW8, DW8B	M	+		11/98 ➧	6444.B9	**92205**	0	0	0	A/A
BERLINGO (96-) 2.0 HDi	D	DW10TD	M	+/-		10/99 ➧	6444.B9	**92205**	0	0	0	A/A
BERLINGO (02-) 1.1 i	G	TU1JP	M	+/-		12/02 ➧	6444.B9	**92205**	0	0	0	A/A
BERLINGO (02-) 1.1 i	G	TU1JP	M	+/-		12/02 ➧	6444.B9	**92205**	0	0	0	A/A
BERLINGO (02-) 1.4 i	G	TU3JP	M	+/-		12/02 ➧	6444.B9	**92205**	0	0	0	A/A
BERLINGO (02-) 1.4 i	G	TU3JP	M	+/-		12/02 ➧	6444.B9	**92205**	0	0	0	A/A
BERLINGO (02-) 1.6 HDI	D	DV6B	M	+/-		12/02 ➧	6444.B9	**92205**	0	0	0	A/A
BERLINGO (02-) 1.6 HDI 16V	D	DV6TED4	M	+/-		12/02 ➧	6444.B9	**92205**	0	0	0	A/A
BERLINGO (02-) 1.6 i 16V	G	TU5JP4	M	+/-		12/02 ➧	6444.B9	**92205**	0	0	0	A/A
BERLINGO (02-) 1.6 i 16V	G	TU5JP4	M	+/-		12/02 ➧	6444.B9	**92205**	0	0	0	A/A
BERLINGO (02-) 1.9 D	D	DW8B	M	+/-		12/02 ➧	6444.B9	**92205**	0	0	0	A/A
BERLINGO (02-) 2.0 HDi	D	DW10TD	M	+/-		12/02 ➧	6444.B9	**92205**	0	0	0	A/A
DISPATCH (95-) 1.6 i	G	SPI	M	+		10/95 ➧	9566945280	**92170**	360	217	67	A/A
DISPATCH (95-) 1.9 D	D	DW8	M	+		10/95 ➧	9566945280	**92170**	360	217	67	A/A
DISPATCH (95-) 1.9 D	D	XUD9A	M	+		10/95 ➧	9566945280	**92170**	360	217	67	A/A
DISPATCH (95-) 1.9 TD	D	XUDTE	M	+/-		10/95 ➧	9566945280	**92170**	360	217	67	A/A
DISPATCH (95-) 2.0 HDi	D	DW10ATED	M	+/-		02/00 ➧	9566945280	**92170**	360	217	67	A/A
DISPATCH (95-) 2.1 TD	D	XUD11ATE	M	+/-		10/95 ➧	9566945280	**92170**	360	217	67	A/A
JUMPY (95-) 1.6 i	G	SPI	M	+		10/95 ➧	9566945280	**92170**	360	217	67	A/A
JUMPY (95-) 1.9 D	D	DW8	M	+		10/95 ➧	9566945280	**92170**	360	217	67	A/A
JUMPY (95-) 1.9 D	D	XUD9A	M	+		10/95 ➧	9566945280	**92170**	360	217	67	A/A
JUMPY (95-) 1.9 TD	D	XUDTE	M	+/-		10/95 ➧	9566945280	**92170**	360	217	67	A/A
JUMPY (95-) 2.0 HDi	D	DW10ATED	M	+/-		02/00 ➧	9566945280	**92170**	360	217	67	A/A
JUMPY (95-) 2.1 TD	D	XUD11ATE	M	+/-		10/95 ➧	9566945280	**92170**	360	217	67	A/A
FIAT LIGHT VAN												
DOBLO (01-) 1.2 i	G	223 A5.000	M	+		03/01 ➧	46722960 +	**92206**	0	0	0	A/A
DOBLO (01-) 1.3 JTD	D	188 A9.000	M	+		01/03 ➧	46722960 +	**92206**	0	0	0	A/A
DOBLO (01-) 1.4 i	G	350 A1.000	M	+		10/01 ➧	46722960 +	**92206**	0	0	0	A/A
DOBLO (01-) 1.6 i 16V	G	182 B6.000	M	+		09/05 ➧	46722960 +	**92206**	0	0	0	A/A
DOBLO (01-) 1.6 i 16V	G	182 B6.000	M	+		10/01 ➧ 05/05	46722960 +	**92206**	0	0	0	A/A
DOBLO (01-) 1.9 JTD	D	182 B9.000	M	+		10/01 ➧	46722960 +	**92206**	0	0	0	A/A
SCUDO (96-) 1.6 i	G	220 A2.000	M	+		07/95 ➧	9566945280	**92170**	360	217	67	A/A
SCUDO (96-) 1.9 D	D	D9B	M	+		07/95 ➧	9566945280	**92170**	360	217	67	A/A
SCUDO (96-) 1.9 TD	D	D8B	M	+/-		07/95 ➧	9566945280	**92170**	360	217	67	A/A
SCUDO (96-) 2.0 i 16V	G	RFN	M	+		07/95 ➧	9566945280	**92170**	360	217	67	A/A
SCUDO (96-) 2.0 JTD	D	RHX	M	+/-		02/00 ➧	9566945280	**92170**	360	217	67	A/A
SCUDO (96-) 2.0 JTD	D	RHZ	M	+/-		02/00 ➧	9566945280	**92170**	360	217	67	A/A

EVAPORATORS

	G/D			AC	Note		OE	Nissens	Dim. H	Dim. W	Dim. T	Mat.
FORD LIGHT VAN												
MAVERICK (93-) 2.4 i	G	KA24E	M	+/-		02/93 ➧ 05/96	27280-OF000	**92084**	0	0	0	A/A
MAVERICK (93-) 2.7 TDi	D	TD27T	M	+/-		02/93 ➧ 05/96	27280-OF000	**92084**	0	0	0	A/A
MAVERICK (02-) 2.0 i 16V	G		M/A	+/-		09/02 ➧	EC0161190 +	**92218**	231	268	92	A/A
MAVERICK (02-) 2.3 i 16V	G		M/A	+/-		09/02 ➧	EC0161190 +	**92218**	231	268	92	A/A
MAVERICK (02-) 3.0 i V6 24V	G		M/A	+/-		09/02 ➧	EC0161190 +	**92218**	231	268	92	A/A
TRANSIT (00-) 2.0 D 75 HP	D		M	+/-		08/00 ➧	1318991 +	**92194**	219	237	92	A/A
TRANSIT (00-) 2.0 D 85 HP	D		M	+/-		08/00 ➧	1318991 +	**92194**	219	237	92	A/A
TRANSIT (00-) 2.0 D 100 HP	D		M	+/-		08/00 ➧	1318991 +	**92194**	219	237	92	A/A
TRANSIT (00-) 2.0 TDCI 125 HP	D		M	+/-		08/00 ➧	1318991 +	**92194**	219	237	92	A/A
TRANSIT (00-) 2.3 i 16V	G		M	+/-		01/00 ➧	1318991 +	**92194**	219	237	92	A/A
TRANSIT (00-) 2.4 D 75 HP	D		M	+		01/00 ➧	1318991 +	**92194**	219	237	92	A/A
TRANSIT (00-) 2.4 D 90 HP	D		M	+		01/00 ➧	1318991 +	**92194**	219	237	92	A/A
TRANSIT (00-) 2.4 D 115 HP	D		M	+		07/00 ➧	1318991 +	**92194**	219	237	92	A/A
TRANSIT (00-) 2.4 D 120 HP	D		M	+		07/00 ➧	1318991 +	**92194**	219	237	92	A/A
TRANSIT (00-) 2.4 D 125 HP	D		M	+		07/00 ➧	1318991 +	**92194**	219	237	92	A/A
TRANSIT (00-) 2.4 TDCI 135 HP	D		M	+		03/04 ➧	1318991 +	**92194**	219	237	92	A/A
TRANSIT CONNECT (02-) 1.8 Di	D		M	+	75 HP	05/02 ➧	1062481 +	**92193**	220	240	80	A/A
TRANSIT CONNECT (02-) 1.8 Di	D		M	+	90 HP	08/02 ➧	1062481 +	**92193**	220	240	80	A/A
TRANSIT CONNECT (02-) 1.8 i 16V	G		M	+		05/02 ➧	1062481 +	**92193**	220	240	80	A/A
TRANSIT CONNECT (02-) 1.8 TDCi	D		M	+	75 HP	08/02 ➧	1062481 +	**92193**	220	240	80	A/A
TRANSIT CONNECT (02-) 1.8 TDCi	D		M	+	90 HP	08/02 ➧	1062481 +	**92193**	220	240	80	A/A
KIA LIGHT VAN												
K-SERIE (04-) 2.5 TCI	D	D4BH	M	+/-		07/04 ➧	97319-4E000	**92231**	0	0	0	A/A
K-SERIE (04-) 2.7 D	D	NA	M	+/-		07/04 ➧	97319-4E000	**92231**	0	0	0	A/A
LDV (96-) LIGHT VAN												
CONVOY (98-) 2.5 DI	D	EN55	M	+/-		10/98 ➧	+	**92086**	0	0	0	A/A
CONVOY (98-) 2.5 DI	D	EN55	M	+/-		10/98 ➧		**92087**	273	200	72	A/A
CONVOY (98-) 2.5 TDi	D	ET70	M	+/-		10/98 ➧	+	**92086**	0	0	0	A/A
MAZDA LIGHT VAN												
MPV LV (95-) 2.5 TD	D	WLT	M	+/-		12/95 ➧	LB40-61-J10+	**92055**	0	0	0	A/A
MPV LV (95-) 2.5 TD	D	WLT	M	+/-		12/95 ➧	LB40-61-P10	**92056**	0	0	0	A/A
MPV LV (95-) 3.0 i	G	JE	M	+/-		12/95 ➧	LB40-61-J10+	**92055**	0	0	0	A/A
MPV LV (95-) 3.0 i	G	JE	A	+/-		12/95 ➧	LB40-61-J10+	**92055**	0	0	0	A/A
MPV LV52				+	FRONT	/89 ➧ /93	LA01-61-J10	**92053**	0	0	0	A/A
MPV LV52				+	REAR	/89 ➧ /93	LA05-61-P01	**92054**	0	0	0	A/A
MPV LV52				+	FRONT	10/93 ➧ 10/95	LB40-61-J10	**92055**	0	0	0	A/A
MPV LV52				+	REAR	10/93 ➧ 10/95	LB40-61-P10	**92056**	0	0	0	A/A
MPV LV52 3.0 i	G			+/-		/91 ➧ 10/95	LA05-61-P01+	**92054**	0	0	0	A/A
TRIBUTE (02-) 2.0 i 16V	G		M/A	+/-		09/02 ➧	EC0161190 +	**92218**	231	268	92	A/A
TRIBUTE (02-) 2.3 i 16V	G		M/A	+/-		09/02 ➧	EC0161190 +	**92218**	231	268	92	A/A
TRIBUTE (02-) 3.0 i V6 24V	G		M/A	+/-		09/02 ➧	EC0161190 +	**92218**	231	268	92	A/A
MERCEDES LIGHT VAN												
VIANO W 639 (03-) 2.0 CDI	D	OM646	M	+/-		09/03 ➧	001 830 57 58+	**92248**	235	263	65	A/A
VIANO W 639 (03-) 2.0 CDI	D	OM646	M	+/-		09/03 ➧	001 830 58 58	**92249**	142	200	65	A/A
VIANO W 639 (03-) 2.2 CDI	D	OM646	M	+/-		09/03 ➧	001 830 57 58+	**92248**	235	263	65	A/A
VIANO W 639 (03-) 3.2 i V6	G	M112	M	+/-		09/03 ➧	001 830 57 58+	**92248**	235	263	65	A/A

EVAPORATORS

	G/D			AC	Note		OE	Nissens	Dim. H	W	T	Mat.
MERCEDES LIGHT VAN (../..)												
VIANO W 639 (03-) 3.5 i V6	G	M112	M	+/-		09/03 ➧	001 830 57 58+	**92248**	235	263	65	A/A
VITO W 638 (96-) 108 CDI	D	OM611.940	M	+		03/99 ➧	000 830 98 58	**92148**	360	230	67	A/A
VITO W 638 (96-) 108 CDI	D	OM611.940	A	+		03/99 ➧	000 830 98 58	**92148**	360	230	67	A/A
VITO W 638 (96-) 108 D	D	OM601.942	M/A	+		02/96 ➧ 03/99	000 830 98 58	**92148**	360	230	67	A/A
VITO W 638 (96-) 110 CDI	D	OM611.980	M	+		03/99 ➧	000 830 98 58	**92148**	360	230	67	A/A
VITO W 638 (96-) 110 CDI	D	OM611.980	A	+		03/99 ➧	000 830 98 58	**92148**	360	230	67	A/A
VITO W 638 (96-) 110 TD	D	OM601.970	M/A	+		02/96 ➧ 03/99	000 830 98 58	**92148**	360	230	67	A/A
VITO W 638 (96-) 112 CDI	D	OM611.960	M	+		03/99 ➧	000 830 98 58	**92148**	360	230	67	A/A
VITO W 638 (96-) 112 CDI	D	OM611.960	A	+		03/99 ➧	000 830 98 58	**92148**	360	230	67	A/A
VITO W 638 (96-) 113	G	M111.948	M/A	+		02/96 ➧ 03/99	000 830 98 58	**92148**	360	230	67	A/A
VITO W 638 (96-) 113	G	M111.948	M	+		03/99 ➧ 07/03	000 830 98 58	**92148**	360	230	67	A/A
VITO W 638 (96-) 113	G	M111.948	A	+/-		03/99 ➧ 07/03	000 830 98 58	**92148**	360	230	67	A/A
VITO W 638 (96-) 114	G	M111.978	M/A	+		02/96 ➧ 03/99	000 830 98 58	**92148**	360	230	67	A/A
VITO W 638 (96-) 114	G	M111.978	M	+		03/99 ➧ 07/03	000 830 98 58	**92148**	360	230	67	A/A
VITO W 638 (96-) 114	G	M111.978	A	+/-		03/99 ➧ 07/03	000 830 98 58	**92148**	360	230	67	A/A
VITO W 639 (03-) 2.0 CDI	D	OM646	M	+/-		09/03 ➧	001 830 57 58+	**92248**	235	263	65	A/A
VITO W 639 (03-) 2.0 CDI	D	OM646	M	+/-		09/03 ➧	001 830 58 58	**92249**	142	200	65	A/A
VITO W 639 (03-) 2.2 CDI	D	OM646	M	+/-		09/03 ➧	001 830 57 58+	**92248**	235	263	65	A/A
VITO W 639 (03-) 3.2 i V6	G	M112	M	+/-		09/03 ➧	001 830 57 58+	**92248**	235	263	65	A/A
NISSAN LIGHT VAN												
INTERSTAR (02-) 1.9 dCi	D	F9Q	M	+		01/03 ➧ 11/03	27280-00QAE	**92264**	316	203	64	A/A
INTERSTAR (02-) 2.2 dCi	D	G9T	M	+		01/03 ➧ 11/03	27280-00QAE	**92264**	316	203	64	A/A
INTERSTAR (02-) 2.5 dCi	D	G9U	M	+		01/03 ➧ 11/03	27280-00QAE	**92264**	316	203	64	A/A
KING CAB D21 (85-) 1.6	G	Z16	M	+/-		08/85 ➧	27280-59G05	**92084**	0	0	0	A/A
KING CAB D21 (85-) 1.8	G	Z18	M	+/-		08/85 ➧	27280-59G05	**92084**	0	0	0	A/A
KING CAB D21 (85-) 2.0	G	Z20	M	+/-		09/85 ➧	27280-59G05	**92084**	0	0	0	A/A
KING CAB D21 (85-) 2.3 D	D	TD23	M	+/-		08/85 ➧	27280-59G05	**92084**	0	0	0	A/A
KING CAB D21 (85-) 2.4	G	Z24	M	+/-		08/85 ➧	27280-59G05	**92084**	0	0	0	A/A
KING CAB D21 (85-) 2.4	G	Z24	A	+/-		08/85 ➧	27280-59G05	**92084**	0	0	0	A/A
KING CAB D21 (85-) 2.4 i	G	Z24I	M	+/-		08/85 ➧	27280-59G05	**92084**	0	0	0	A/A
KING CAB D21 (85-) 2.4 i 12V	G	KA24E	M	+/-		08/85 ➧	27280-59G05	**92084**	0	0	0	A/A
KING CAB D21 (85-) 2.5 D	D	SD25	M	+/-		08/85 ➧	27280-59G05	**92084**	0	0	0	A/A
KING CAB D21 (85-) 2.5 TD	D	TD25	M	+/-		09/87 ➧	27280-59G05	**92084**	0	0	0	A/A
KING CAB D21 (85-) 2.7 TDi	D	TD27T	M	+/-		09/87 ➧	27280-59G05	**92084**	0	0	0	A/A
KING CAB D21 (85-) 3.0 i V6	G	VG30E	M	+/-		08/85 ➧	27280-59G05	**92084**	0	0	0	A/A
KING CAB D21 (85-) 3.0 i V6	G	VG30E	A	+/-		08/85 ➧	27280-59G05	**92084**	0	0	0	A/A
KUBISTAR (03-) 1.2 i	G	D7F	M	+		08/03 ➧		**92215**	248	200	0	A/A
KUBISTAR (03-) 1.2 i 16V	G	D4F	M	+		08/03 ➧		**92215**	248	200	0	A/A
KUBISTAR (03-) 1.5 dCi	D	K9K	M	+		08/03 ➧		**92215**	248	200	0	A/A
KUBISTAR (03-) 1.5 dCi	D	K9K	M	+/-		08/03 ➧		**92215**	248	200	0	A/A
KUBISTAR (03-) 1.6 i 16V	G	K4M	M	+		08/03 ➧		**92215**	248	200	0	A/A
KUBISTAR (03-) 1.9 D	D	F8Q	M	+		08/03 ➧		**92215**	248	200	0	A/A
KUBISTAR (03-) 1.9 dCi	D	F9Q	M	+/-		08/03 ➧		**92215**	248	200	0	A/A
PICK UP D21 (85-) 1.6	G	Z16	M	+/-		08/85 ➧	27280-59G05	**92084**	0	0	0	A/A
PICK UP D21 (85-) 1.8	G	Z18	M	+/-		08/85 ➧	27280-59G05	**92084**	0	0	0	A/A
PICK UP D21 (85-) 2.0	G	Z20	M	+/-		09/85 ➧	27280-59G05	**92084**	0	0	0	A/A
PICK UP D21 (85-) 2.3 D	D	TD23	M	+/-		08/85 ➧	27280-59G05	**92084**	0	0	0	A/A
PICK UP D21 (85-) 2.4	G	Z24	M	+/-		08/85 ➧	27280-59G05	**92084**	0	0	0	A/A
PICK UP D21 (85-) 2.4	G	Z24	A	+/-		08/85 ➧	27280-59G05	**92084**	0	0	0	A/A

EVAPORATORS

	G/D			AC	Note		OE	Nissens	Dim. H	Dim. W	Dim. T	Mat.
NISSAN LIGHT VAN (../..)												
PICK UP D21 (85-) 2.4 i	G	Z24I	M	+/-		08/85 ➧	27280-59G05	**92084**	0	0	0	A/A
PICK UP D21 (85-) 2.4 i 12V	G	KA24E	M	+/-		08/85 ➧	27280-59G05	**92084**	0	0	0	A/A
PICK UP D21 (85-) 2.5 D	D	SD25	M	+/-		08/85 ➧	27280-59G05	**92084**	0	0	0	A/A
PICK UP D21 (85-) 2.5 TD	D	TD25	M	+/-		09/87 ➧	27280-59G05	**92084**	0	0	0	A/A
PICK UP D21 (85-) 2.7 TDi	D	TD27T	M	+/-		09/87 ➧	27280-59G05	**92084**	0	0	0	A/A
PICK UP D21 (85-) 3.0 i V6	G	VG30E	M	+/-		08/85 ➧	27280-59G05	**92084**	0	0	0	A/A
PICK UP D21 (85-) 3.0 i V6	G	VG30E	A	+/-		08/85 ➧	27280-59G05	**92084**	0	0	0	A/A
TERRANO (86-) 2.4 i	G	Z24I	M	+/-		08/85 ➧	27280-59G05	**92084**	0	0	0	A/A
TERRANO (87-) 2.7 TDi	D	TD27T	M	+/-		09/87 ➧	27280-59G05	**92084**	0	0	0	A/A
TERRANO (87-) 3.0 i V6	G	VG30E	M	+/-		08/85 ➧	27280-59G05	**92084**	0	0	0	A/A
TERRANO (87-) 3.0 i V6	G	VG30E	A	+/-		08/85 ➧	27280-59G05	**92084**	0	0	0	A/A
TERRANO (93-) 2.4 i 12V	G	KA24E	M	+/-		01/93 ➧	27280-OF000	**92084**	0	0	0	A/A
TERRANO (93-) 2.7 TD	D	TD27T	M	+/-		01/93 ➧	27280-OF000	**92084**	0	0	0	A/A
VANETTE (86-)				+				**92141**	0	0	0	A/A
OPEL LIGHT VAN												
ARENA (98-) 1.9 dCi	D	F9Q	M	+		01/98 ➧ 06/01	77 01 205 590	**92264**	316	203	64	A/A
ARENA (98-) 1.9 dCi	D	F9Q	M	+		01/03 ➧ 11/03	77 01 205 590	**92264**	316	203	64	A/A
ARENA (98-) 2.2 dCi	D	G9T	M	+		01/98 ➧ 06/01	77 01 205 590	**92264**	316	203	64	A/A
ARENA (98-) 2.2 dCi	D	G9T	M	+		01/03 ➧ 11/03	77 01 205 590	**92264**	316	203	64	A/A
ARENA (98-) 2.2 dTi	D	G9T	M	+		01/98 ➧ 06/01	77 01 205 590	**92264**	316	203	64	A/A
ARENA (98-) 2.2 dTi	D	G9T	M	+		01/03 ➧ 11/03	77 01 205 590	**92264**	316	203	64	A/A
ARENA (98-) 2.5 D	D	S8U	M	-		10/98 ➧	77 01 205 590	**92264**	316	203	64	A/A
ARENA (98-) 2.5 dCi	D	G9U	M	+		01/98 ➧ 06/01	77 01 205 590	**92264**	316	203	64	A/A
ARENA (98-) 2.5 dCi	D	G9U	M	+		01/03 ➧ 11/03	77 01 205 590	**92264**	316	203	64	A/A
ARENA (98-) 2.8 dTi	D	S9W	M	+		10/98 ➧ 01/03	77 01 205 590	**92264**	316	203	64	A/A
COMBO (93-) 1.2 i	G	C12NZ	M	+		03/93 ➧ 09/00	1618 017 +	**92151**	243	204	72	A/A
COMBO (93-) 1.2 i	G	C12NZ	M	+		03/93 ➧ 09/00	1618 092	**92150**	225	204	72	A/A
COMBO (93-) 1.2 i	G	X12SZ	M	+		03/93 ➧ 09/00	1618 017 +	**92151**	243	204	72	A/A
COMBO (93-) 1.4 i	G	C14NZ	M	+		03/93 ➧ 09/00	1618 017 +	**92151**	243	204	72	A/A
COMBO (93-) 1.4 i	G	X14SZ	M	+		03/93 ➧ 09/00	1618 017 +	**92151**	243	204	72	A/A
COMBO (93-) 1.4 i 16V	G	X14XE	M	+		03/93 ➧ 09/00	1618 017 +	**92151**	243	204	72	A/A
COMBO (93-) 1.7 D	D	17D	M	+/-		03/96 ➧ 09/00	1618 092	**92150**	225	204	72	A/A
COMBO (93-) 1.7 D	D	X17D	M	+/-		03/96 ➧ 09/00		**92150**	225	204	72	A/A
COMBO (00-) 1.2 i 16V	G	Z12XE	M	+/-		09/00 ➧	6845612	**92187**	242	203	62	A/A
COMBO (00-) 1.3 DTi	D	Y13DT	M	+		10/04 ➧	6845612	**92187**	242	203	62	A/A
COMBO (00-) 1.3 DTi	D	Z13DT	M	+		10/04 ➧	6845612	**92187**	242	203	62	A/A
COMBO (00-) 1.4 i 16V	G	Z14XE	M	+/-		09/00 ➧	6845612	**92187**	242	203	62	A/A
COMBO (00-) 1.7 DTi	D	Y17DT	M	+/-		09/00 ➧	6845612	**92187**	242	203	62	A/A
COMBO (00-) 1.7 DTi	D	Y17DTL	M	+/-		09/00 ➧	6845612	**92187**	242	203	62	A/A
COMBO (00-) 1.7 DTi	D	Z17DTH	M	+/-		09/00 ➧	6845612	**92187**	242	203	62	A/A
FRONTERA A (92-) 2.0 i	G	C20NE	M	+/-		03/91 ➧ 03/95	97046488	**92147**	0	0	0	A/A
FRONTERA A (92-) 2.0 i	G	X20SE	M	+/-		10/94 ➧ 08/98	97046488	**92147**	0	0	0	A/A
FRONTERA A (92-) 2.2 i	G	X22SE	M	+/-		10/94 ➧ 08/98	97046488	**92147**	0	0	0	A/A
FRONTERA A (92-) 2.2 i 16V	G	X22XE	M	+/-		10/94 ➧ 08/98	97046488	**92147**	0	0	0	A/A
FRONTERA A (92-) 2.3 TD	D	23DTR	M	+/-		03/91 ➧ 09/94	97046488	**92147**	0	0	0	A/A
FRONTERA A (92-) 2.4 i	G	C24NE	M	+/-		02/92 ➧ 09/94	97046488	**92147**	0	0	0	A/A
FRONTERA A (92-) 2.5 TDS	D		M	+/-		07/96 ➧ 09/98	97046488	**92147**	0	0	0	A/A
FRONTERA A (92-) 2.8 TD	D	28TD	M	+/-		10/94 ➧ 09/98	97046488	**92147**	0	0	0	A/A

EVAPORATORS

	G/D			AC	Note		OE	Nissens	Dim. H	W	T	Mat.
OPEL LIGHT VAN (../..)												
MOVANO (98-) 1.9 dCi	D	F9Q	M	+		01/98 ➧ 06/01	4501 171 +	**92264**	316	203	64	A/A
MOVANO (98-) 1.9 dCi	D	F9Q	M	+		01/03 ➧ 11/03	4501 171 +	**92264**	316	203	64	A/A
MOVANO (98-) 2.2 dCi	D	G9T	M	+		01/98 ➧ 06/01	4501 171 +	**92264**	316	203	64	A/A
MOVANO (98-) 2.2 dCi	D	G9T	M	+		01/03 ➧ 11/03	4501 171 +	**92264**	316	203	64	A/A
MOVANO (98-) 2.2 dTi	D	G9T	M	+		01/98 ➧ 06/01	4501 171 +	**92264**	316	203	64	A/A
MOVANO (98-) 2.2 dTi	D	G9T	M	+		01/03 ➧ 11/03	4501 171 +	**92264**	316	203	64	A/A
MOVANO (98-) 2.5 D	D	S8U	M	-		10/98 ➧	4501 171 +	**92264**	316	203	64	A/A
MOVANO (98-) 2.5 dCi	D	G9U	M	+		01/98 ➧ 06/01	4501 171 +	**92264**	316	203	64	A/A
MOVANO (98-) 2.5 dCi	D	G9U	M	+		01/03 ➧ 11/03	4501 171 +	**92264**	316	203	64	A/A
MOVANO (98-) 2.8 dTi	D	S9W	M	+		10/98 ➧ 01/03	4501 171 +	**92264**	316	203	64	A/A
PEUGEOT LIGHT VAN												
E7 - EUROCAB 2.0 HDi	D	DW10BTED	M	+/-		01/01 ➧	9566945280	**92170**	360	217	67	A/A
EXPERT (95-) 1.6 i	G	SPI	M	+		10/95 ➧	9566945280	**92170**	360	217	67	A/A
EXPERT (95-) 1.8 i	G	XU7JP	M	+		07/96 ➧	9566945280	**92170**	360	217	67	A/A
EXPERT (95-) 1.9 D	D	DW8	M	+		05/98 ➧	9566945280	**92170**	360	217	67	A/A
EXPERT (95-) 1.9 D	D	XUD9A	M	+		10/95 ➧	9566945280	**92170**	360	217	67	A/A
EXPERT (95-) 1.9 TD	D	XUDTE	M	+/-		10/95 ➧	9566945280	**92170**	360	217	67	A/A
EXPERT (95-) 2.0 HDi	D	DW10ATED	M	+/-		09/00 ➧	9566945280	**92170**	360	217	67	A/A
EXPERT (95-) 2.0 i 16V	G	EW10J4	M	+		09/00 ➧	9566945280	**92170**	360	217	67	A/A
EXPERT (95-) 2.1 TD	D	XUD11ATE	M	+/-		10/95 ➧	9566945280	**92170**	360	217	67	A/A
PARTNER (96-) 1.1 i	G	TU1M	M	+		07/96 ➧	6444.B9	**92205**	0	0	0	A/A
PARTNER (96-) 1.4 i	G	TU3JP	M	+/-		07/96 ➧ 10/98	6444.B9	**92205**	0	0	0	A/A
PARTNER (96-) 1.4 i	G	TU3JP	M	+/-		11/98 ➧	6444.B9	**92205**	0	0	0	A/A
PARTNER (96-) 1.6 i	G	TU5JP	M	+/-		07/96 ➧	6444.B9	**92205**	0	0	0	A/A
PARTNER (96-) 1.6 i 16V	G	TU5JP4	M	+/-		11/98 ➧	6444.B9	**92205**	0	0	0	A/A
PARTNER (96-) 1.8 D	D	XUD7	M	+		06/96 ➧ 10/98	6444.B9	**92205**	0	0	0	A/A
PARTNER (96-) 1.8 D	D	XUD7	M	+		10/98 ➧	6444.B9	**92205**	0	0	0	A/A
PARTNER (96-) 1.8 i	G	XU7JB	M	+/-		07/97 ➧ 10/98	6444.B9	**92205**	0	0	0	A/A
PARTNER (96-) 1.8 i	G	XU7JB	M	+/-		11/98 ➧	6444.B9	**92205**	0	0	0	A/A
PARTNER (96-) 1.9 D	D	XUD9,DW8, DW8B	M	+		06/96 ➧ 10/98	6444.B9	**92205**	0	0	0	A/A
PARTNER (96-) 1.9 D	D	XUD9,DW8, DW8B	M	+		11/98 ➧	6444.B9	**92205**	0	0	0	A/A
PARTNER (96-) 2.0 HDi	D	DW10TD	M	+/-		01/00 ➧	6444.B9	**92205**	0	0	0	A/A
PARTNER (02-) 1.1 i	G	TU1JP	M	+/-		11/02 ➧	6444.B9	**92205**	0	0	0	A/A
PARTNER (02-) 1.1 i	G	TU1JP	M	+/-		11/02 ➧	6444.B9	**92205**	0	0	0	A/A
PARTNER (02-) 1.4 i	G	TU3JP	M	+/-		11/02 ➧	6444.B9	**92205**	0	0	0	A/A
PARTNER (02-) 1.4 i	G	TU3JP	M	+/-		11/02 ➧	6444.B9	**92205**	0	0	0	A/A
PARTNER (02-) 1.6 HDI	D	DV6B	M	+/-		11/02 ➧	6444.B9	**92205**	0	0	0	A/A
PARTNER (02-) 1.6 HDI 16V	D	DV6TED4	M	+/-		11/02 ➧	6444.B9	**92205**	0	0	0	A/A
PARTNER (02-) 1.6 i 16V	G	TU5JP4	M	+/-		11/02 ➧	6444.B9	**92205**	0	0	0	A/A
PARTNER (02-) 1.6 i 16V	G	TU5JP4	M	+/-		11/02 ➧	6444.B9	**92205**	0	0	0	A/A
PARTNER (02-) 1.9 D	D	DW8B	M	+/-		11/02 ➧	6444.B9	**92205**	0	0	0	A/A
PARTNER (02-) 2.0 HDi	D	DW10TD	M	+/-		11/02 ➧	6444.B9	**92205**	0	0	0	A/A
PONTIAC LIGHT VAN												
G6 (05-) 1.9 CDTi	D		M	+/-		01/05 ➧	+	**92165**	0	0	0	A/A
G6 (05-) 1.9 CDTi	D		M	+/-		01/05 ➧		**92166**	0	0	0	A/A
G6 (05-) 1.9 CDTi	D		A	+/-		01/05 ➧	+	**92165**	0	0	0	A/A
G6 (05-) 2.0 i 16V TURBO	G		M	+/-		01/05 ➧	+	**92165**	0	0	0	A/A
G6 (05-) 2.0 i 16V TURBO	G		A	+/-		01/05 ➧	+	**92165**	0	0	0	A/A

EVAPORATORS

	G/D			AC	Note		OE	Nissens	Dim. H	W	T	Mat.
PONTIAC LIGHT VAN (../..)												
G6 (05-) 2.8 i TURBO	G		A	+/-		01/05 ➧	+	**92165**	0	0	0	A/A
RENAULT LIGHT VAN												
KANGOO (98-) 1.2 i	G	D7F	M	+		01/98 ➧	77 01 205 748	**92215**	248	200	0	A/A
KANGOO (98-) 1.2 i 16V	G	D4D	M	+		01/98 ➧	77 01 205 748	**92215**	248	200	0	A/A
KANGOO (98-) 1.2 i 16V	G	D4F	M	+		01/98 ➧ 02/03	77 01 205 748	**92215**	248	200	0	A/A
KANGOO (98-) 1.2 i 16V	G	D4F	M	+		03/03 ➧	77 01 205 748	**92215**	248	200	0	A/A
KANGOO (98-) 1.4 i	G	E7J	M	+		01/98 ➧	77 01 205 748	**92215**	248	200	0	A/A
KANGOO (98-) 1.5 dCi	D	K9K	M	+		03/03 ➧ 12/03	77 01 205 748	**92215**	248	200	0	A/A
KANGOO (98-) 1.5 dCi	D	K9K	M	+		09/02 ➧ 03/03	77 01 205 748	**92215**	248	200	0	A/A
KANGOO (98-) 1.5 dCi	D	K9K	M	+		10/01 ➧ 09/02	77 01 205 748	**92215**	248	200	0	A/A
KANGOO (98-) 1.5 dCi	D	K9K	M	+/-		10/01 ➧	77 01 205 748	**92215**	248	200	0	A/A
KANGOO (98-) 1.6 i	D	K7M	M	+/-		12/99 ➧	77 01 205 748	**92215**	248	200	0	A/A
KANGOO (98-) 1.6 i 16V	G	K4M	M/A	+		01/02 ➧	77 01 205 748	**92215**	248	200	0	A/A
KANGOO (98-) 1.9 D	D	F8Q	M	+		09/97 ➧	77 01 205 748	**92215**	248	200	0	A/A
KANGOO (98-) 1.9 dCi	D	F9Q	M	+/-		01/02 ➧	77 01 205 748	**92215**	248	200	0	A/A
KANGOO (98-) 1.9 dTi	G	F9Q	M	+		12/99 ➧ 03/00	77 01 205 748	**92215**	248	200	0	A/A
MASTER (98-) 1.9 dCi	D	F9Q	M	+		01/98 ➧ 06/01	77 01 205 590	**92264**	316	203	64	A/A
MASTER (98-) 1.9 dCi	D	F9Q	M	+		01/03 ➧ 11/03	77 01 205 590	**92264**	316	203	64	A/A
MASTER (98-) 2.2 dCi	D	G9T	M	+		01/03 ➧ 11/03	77 01 205 590	**92264**	316	203	64	A/A
MASTER (98-) 2.2 dTi	D	G9T	M	+		01/98 ➧ 06/01	77 01 205 590	**92264**	316	203	64	A/A
MASTER (98-) 2.2 dTi	D	G9T	M	+		01/03 ➧ 11/03	77 01 205 590	**92264**	316	203	64	A/A
MASTER (98-) 2.5 D	D	S8U	M	+/-		09/97 ➧	77 01 205 590	**92264**	316	203	64	A/A
MASTER (98-) 2.5 dCi	D	G9U	M	+		01/03 ➧ 11/03	77 01 205 590	**92264**	316	203	64	A/A
MASTER (98-) 2.5 dCi	D	G9U	M	+		07/98 ➧ 06/01	77 01 205 590	**92264**	316	203	64	A/A
MASTER (98-) 2.8 dTi	D	S9W	M	+		09/98 ➧ 01/03	77 01 205 590	**92264**	316	203	64	A/A
SEAT LIGHT VAN												
INCA (95-) 1.4 i	G	AEX	M	+		11/95 ➧ 12/97	1H1.820.103 C	**92135**	255	230	80	A/A
INCA (95-) 1.4 i	G	AKV	M	+		12/97 ➧ 09/00	1H1.820.103 C	**92135**	255	230	80	A/A
INCA (95-) 1.4 i	G	APQ	M	+		12/97 ➧ 06/03	1H1.820.103 C	**92135**	255	230	80	A/A
INCA (95-) 1.4 i	G	AUD	M	+/-		09/00 ➧ 06/03	1H1.820.103 C	**92135**	255	230	80	A/A
INCA (95-) 1.4 i 16V	G	AUA	M	+/-		09/00 ➧ 06/03	1H1.820.103 C	**92135**	255	230	80	A/A
INCA (95-) 1.6 i	G	1F	M	+		11/95 ➧ 05/97	1H1.820.103 C	**92135**	255	230	80	A/A
INCA (95-) 1.6 i	G	AEE	M	+		06/97 ➧ 09/00	1H1.820.103 C	**92135**	255	230	80	A/A
INCA (95-) 1.7 SDi	D	AHB	M	+		07/96 ➧ 09/00	1H1.820.103 C	**92135**	255	230	80	A/A
INCA (95-) 1.9 D	D	1Y	M	+		11/95 ➧ 06/03	1H1.820.103 C	**92135**	255	230	80	A/A
INCA (95-) 1.9 Sdi	D	AEY	M	+		11/95 ➧ 09/00	1H1.820.103 C	**92135**	255	230	80	A/A
INCA (95-) 1.9 Sdi	D	AYQ	M	+/-		09/00 ➧ 06/03	1H1.820.103 C	**92135**	255	230	80	A/A
INCA (95-) 1.9 Sdi	D	AYQ	M	+/-		09/00 ➧ 06/03	1H1.820.103 C	**92135**	255	230	80	A/A
TOYOTA LIGHT VAN												
4 RUNNER (85-) 2.4 i	G	22RE	M	-	RN 10#	08/88 ➧ 01/95	88501-34010	**92124**	0	0	0	A/A
4 RUNNER (85-) 2.4 i	G	22RE	M	-	RN 11#	08/88 ➧ 01/95	88501-34010	**92124**	0	0	0	A/A
4 RUNNER (85-) 2.4 i	G	22RE	M	-	RN 8#	08/88 ➧ 01/95	88501-34010	**92124**	0	0	0	A/A
4 RUNNER (85-) 2.4 i	G	22RE	M	-	RN 9#	08/88 ➧ 01/95	88501-34010	**92124**	0	0	0	A/A
4 RUNNER (85-) 2.4 i	G	22RE	M	+/-	RN 13#	08/88 ➧ 01/95	88501-35010	**92112**	245	222	91	A/A
4 RUNNER (85-) 3.0 i	G	3VZE	M	+/-	VZN 10#	08/89 ➧ 11/95	88501-34010	**92124**	0	0	0	A/A
4 RUNNER (85-) 3.0 i	G	3VZE	M	+/-	VZN 11#	08/89 ➧ 11/95	88501-34010	**92124**	0	0	0	A/A
4 RUNNER (85-) 3.0 i	G	3VZE	M	+/-	VZN 13#	08/89 ➧ 11/95	88501-35010	**92112**	245	222	91	A/A

EVAPORATORS

	G/D			AC	Note		OE	Nissens	Dim. H	Dim. W	Dim. T	Mat.
TOYOTA LIGHT VAN (../..)												
HI-LUX (88-)				+	KZN 13#	08/93 ➧ 11/95	88501-35010	**92112**	245	222	91	A/A
HI-LUX (88-) 2.2	G	4Y	M	+/-	YN 11#	08/88 ➧ 08/94	88501-34010	**92124**	0	0	0	A/A
HI-LUX (88-) 2.4 D	D	2L	M	+/-	LN 8#	01/89 ➧ 04/96	88501-34010	**92124**	0	0	0	A/A
HI-LUX (88-) 2.4 D	D	2L	M	+/-	LN 9#	08/88 ➧ 04/96	88501-34010	**92124**	0	0	0	A/A
HI-LUX (88-) 2.4 D	D	2L	M	+/-	LN 10#	08/88 ➧ 04/96	88501-34010	**92124**	0	0	0	A/A
HI-LUX (88-) 2.4 D	D	2L	M	+/-	LN 11#	08/88 ➧ 04/96	88501-34010	**92124**	0	0	0	A/A
HI-LUX (88-) 2.8 D	D	3L	M	+/-	LN 8#	08/88 ➧ 04/96	88501-34010	**92124**	0	0	0	A/A
HI-LUX (88-) 2.8 D	D	3L	M	+/-	LN 9#	08/88 ➧ 04/96	88501-34010	**92124**	0	0	0	A/A
HI-LUX (88-) 2.8 D	D	3L	M	+/-	LN 13#	08/88 ➧ 04/96	88501-34010	**92124**	0	0	0	A/A
HI-LUX (88-) 3.0 i	G	3VZE	M	+/-	VZN 13#	08/89 ➧ 11/95	88501-35010	**92112**	245	222	91	A/A
HI-LUX (88-) 3.0 i	G	3VZE	M	+/-	VZN 10#	08/89 ➧ 11/95	88501-34010	**92124**	0	0	0	A/A
HI-LUX (88-) 3.0 i	G	3VZE	M	+/-	VZN 11#	08/89 ➧ 11/95	88501-34010	**92124**	0	0	0	A/A
LAND CRUISER 80 (94-)				+	FZJ 80	05/94 ➧	88501-60101	**92107**	0	0	0	A/A
LAND CRUISER 80 (94-)				+	HDJ 80	05/94 ➧	88501-60101	**92107**	0	0	0	A/A
LAND CRUISER 80 (94-)				+	HZJ 80	05/94 ➧	88501-60101	**92107**	0	0	0	A/A
VOLKSWAGEN LIGHT VAN												
CADDY (95-) 1.6 i	G	1F	M	+		11/95 ➧ 05/97	1H1.820.103 C	**92135**	255	230	80	A/A
CADDY (95-) 1.7 SDi	D	AHB	M	+		07/96 ➧ 09/00	1H1.820.103 C	**92135**	255	230	80	A/A
CADDY (95-) 1.9 D	D	1Y	M	+		11/95 ➧ 06/03	1H1.820.103 C	**92135**	255	230	80	A/A
CADDY (95-) 1.9 Sdi	D	AEY	M	+		11/95 ➧ 09/00	1H1.820.103 C	**92135**	255	230	80	A/A
CADDY (95-) 1.9 Sdi	D	AYQ	M	+/-		09/00 ➧ 06/03	1H1.820.103 C	**92135**	255	230	80	A/A
CADDY (95-) 1.9 Sdi	D	AYQ	M	+/-		09/00 ➧ 06/03	1H1.820.103 C	**92135**	255	230	80	A/A
CADDY (95-) 1.9 TDi	D	1Z	M	+		10/96 ➧ 03/97	1H1.820.103 C	**92135**	255	230	80	A/A
CADDY (95-) 1.9 TDi	D	AHU	M	+		10/96 ➧ 09/00	1H1.820.103 C	**92135**	255	230	80	A/A
CADDY (95-) 1.9 TDi	D	ALE	M	+		09/97 ➧ 09/00	1H1.820.103 C	**92135**	255	230	80	A/A
CADDY (04-) 1.4 i 16V	G	BCA	M	+/-		02/04 ➧	1K1.820.103+	**92163**	245	240	60	A/A
CADDY (04-) 1.4 i 16V	G	BCA	M	+/-		02/04 ➧	1K2.820.103	**92164**	225	240	60	A/A
CADDY (04-) 1.6 i	G	BGU	M	+/-		04/04 ➧	1K1.820.103+	**92163**	245	240	60	A/A
CADDY (04-) 1.6 i	G	BSE	M	+/-		04/04 ➧	1K1.820.103+	**92163**	245	240	60	A/A
CADDY (04-) 1.6 i	G	BSF	M	+/-		04/04 ➧	1K1.820.103+	**92163**	245	240	60	A/A
CADDY (04-) 1.9 TDi	D	BJB	M	+/-	105 HP	02/04 ➧	1K1.820.103+	**92163**	245	240	60	A/A
CADDY (04-) 1.9 TDi	D	BLS	M	+/-	105 HP	02/04 ➧	1K1.820.103+	**92163**	245	240	60	A/A
CADDY (04-) 1.9 TDi	D	BSU	M	+/-		02/04 ➧	1K1.820.103+	**92163**	245	240	60	A/A
CADDY (04-) 2.0 GAS	G	BSX	M	+/-		02/04 ➧	1K1.820.103+	**92163**	245	240	60	A/A
CADDY (04-) 2.0 SDI	D	BDJ	M	+/-		02/04 ➧	1K1.820.103+	**92163**	245	240	60	A/A
CADDY (04-) 2.0 SDI	D	BST	M	+/-		02/04 ➧	1K1.820.103+	**92163**	245	240	60	A/A
TOURAN (03-) 1.6 FSI	G	BAG	M	+	HD	02/03 ➧	1K1.820.103+	**92163**	245	240	60	A/A
TOURAN (03-) 1.6 FSI	G	BAG	M	+	HD	02/03 ➧	1K2.820.103	**92164**	225	240	60	A/A
TOURAN (03-) 1.6 FSI	G	BAG	M	+/-		02/03 ➧	1K1.820.103+	**92163**	245	240	60	A/A
TOURAN (03-) 1.6 FSI	G	BAG	A	+/-		02/03 ➧	1K1.820.103+	**92163**	245	240	60	A/A
TOURAN (03-) 1.6 FSI	G	BLP	M	+	HD	02/03 ➧	1K1.820.103+	**92163**	245	240	60	A/A
TOURAN (03-) 1.6 FSI	G	BLP	M	+/-		02/03 ➧	1K1.820.103+	**92163**	245	240	60	A/A
TOURAN (03-) 1.6 FSI	G	BLP	A	+/-		02/03 ➧	1K1.820.103+	**92163**	245	240	60	A/A
TOURAN (03-) 1.6 i 16V	G	BGU	M	+/-		02/03 ➧	1K1.820.103+	**92163**	245	240	60	A/A
TOURAN (03-) 1.6 i 16V	G	BGU	A	+/-		02/03 ➧	1K1.820.103+	**92163**	245	240	60	A/A
TOURAN (03-) 1.6 i 16V	G	BLF	M	+/-		02/03 ➧	1K1.820.103+	**92163**	245	240	60	A/A
TOURAN (03-) 1.6 i 16V	G	BLF	A	+/-		02/03 ➧	1K1.820.103+	**92163**	245	240	60	A/A
TOURAN (03-) 1.6 i 16V	G	BSE	M	+/-		02/03 ➧	1K1.820.103+	**92163**	245	240	60	A/A
TOURAN (03-) 1.6 i 16V	G	BSF	M	+/-		02/03 ➧	1K1.820.103+	**92163**	245	240	60	A/A

EVAPORATORS

	G/D			AC	Note		OE	Nissens	Dim. H W T	Mat.
VOLKSWAGEN LIGHT VAN (../..)										
TOURAN (03-) 1.9 TDi	D	AVQ	M	+	HD	02/03 ➧	1K1.820.103+	**92163**	245 240 60	A/A
TOURAN (03-) 1.9 TDi	D	AVQ	M	+/-		02/03 ➧	1K1.820.103+	**92163**	245 240 60	A/A
TOURAN (03-) 1.9 TDi	D	BKC	M/A	-		02/03 ➧	1K1.820.103+	**92163**	245 240 60	A/A
TOURAN (03-) 1.9 TDi	D	BKC	M/A	+		02/03 ➧	1K1.820.103+	**92163**	245 240 60	A/A
TOURAN (03-) 1.9 TDi	D	BRU	M/A	-		02/03 ➧	1K1.820.103+	**92163**	245 240 60	A/A
TOURAN (03-) 1.9 TDi	D	BRU	M/A	+		02/03 ➧	1K1.820.103+	**92163**	245 240 60	A/A
TOURAN (03-) 2.0 FSi	G	AXW	M/A	+/-		02/03 ➧	1K1.820.103+	**92163**	245 240 60	A/A
TOURAN (03-) 2.0 FSi	G	BLR	M/A	+/-		02/03 ➧	1K1.820.103+	**92163**	245 240 60	A/A
TOURAN (03-) 2.0 GAS	G	BSX	M	+/-		02/03 ➧	1K1.820.103+	**92163**	245 240 60	A/A
TOURAN (03-) 2.0 PD TDi	D	AZV	M/A	+		02/03 ➧	1K1.820.103+	**92163**	245 240 60	A/A
TOURAN (03-) 2.0 PD TDi	D	BKD	M/A	+		02/03 ➧	1K1.820.103+	**92163**	245 240 60	A/A
TOURAN (03-) 2.0 PD TDi	D	BLY	M/A	+		02/03 ➧	1K1.820.103+	**92163**	245 240 60	A/A
TOURAN (03-) 2.0 PD TDi	D	BMM	M/A	+		02/03 ➧	1K1.820.103+	**92163**	245 240 60	A/A
TOURAN (03-) 2.0 PD TDi	D	BMN	M/A	+		02/03 ➧	1K1.820.103+	**92163**	245 240 60	A/A
TRANSPORTER T4 (90-) 1.9 TD	D	ABL	M	+/-		09/96 ➧ 06/03	701.820.103 A	**92133**	260 230 80	A/A
TRANSPORTER T4 (90-) 1.9 TD	D	ABL	M	+/-		10/92 ➧ 06/03	701.820.103 A	**92133**	260 230 80	A/A
TRANSPORTER T4 (90-) 2.0 i	G	AAC	M/A	+/-		09/90 ➧ 06/03	701.820.103 A	**92133**	260 230 80	A/A
TRANSPORTER T4 (90-) 2.0 i	G	AAC	M/A	+/-		09/96 ➧ 06/03	701.820.103 A	**92133**	260 230 80	A/A
TRANSPORTER T4 (90-) 2.0 i	G	AAC	M	+/-		09/90 ➧ 07/94	701.820.103 A	**92133**	260 230 80	A/A
TRANSPORTER T4 (90-) 2.4 D	D	AJA	M/A	+/-		04/97 ➧ 06/03	701.820.103 A	**92133**	260 230 80	A/A
TRANSPORTER T4 (90-) 2.4 D	D	AJA	M/A	+/-		04/97 ➧ 06/03	701.820.103 A	**92133**	260 230 80	A/A
TRANSPORTER T4 (90-) 2.4 D	D	AAB	M	+/-		09/90 ➧ 04/98	701.820.103 A	**92133**	260 230 80	A/A
TRANSPORTER T4 (90-) 2.4 D	D	AAB	M	+/-		09/96 ➧ 04/98	701.820.103 A	**92133**	260 230 80	A/A
TRANSPORTER T4 (90-) 2.5 i	G	ACU	M/A	+/-		02/94 ➧ 10/96	701.820.103 A	**92133**	260 230 80	A/A
TRANSPORTER T4 (90-) 2.5 i	G	AEN	M/A	+/-		05/95 ➧ 12/95	701.820.103 A	**92133**	260 230 80	A/A
TRANSPORTER T4 (90-) 2.5 i	G	AET	M/A	+/-		08/96 ➧ 06/03	701.820.103 A	**92133**	260 230 80	A/A
TRANSPORTER T4 (90-) 2.5 i	G	AET	M/A	+/-		08/96 ➧ 06/03	701.820.103 A	**92133**	260 230 80	A/A
TRANSPORTER T4 (90-) 2.5 i	G	AEU	M/A	+/-		08/96 ➧ 06/03	701.820.103 A	**92133**	260 230 80	A/A
TRANSPORTER T4 (90-) 2.5 i	G	AEU	M/A	+/-		08/96 ➧ 06/03	701.820.103 A	**92133**	260 230 80	A/A
TRANSPORTER T4 (90-) 2.5 i	G	APL	M/A	+/-		05/99 ➧ 12/99	701.820.103 A	**92133**	260 230 80	A/A
TRANSPORTER T4 (90-) 2.5 i	G	APL	M/A	+/-		05/99 ➧ 12/99	701.820.103 A	**92133**	260 230 80	A/A
TRANSPORTER T4 (90-) 2.5 i	G	AVT	M/A	+/-		12/99 ➧ 06/03	701.820.103 A	**92133**	260 230 80	A/A
TRANSPORTER T4 (90-) 2.5 i	G	AVT	M/A	+/-		12/99 ➧ 06/03	701.820.103 A	**92133**	260 230 80	A/A
TRANSPORTER T4 (90-) 2.5 i	G	AAF	M/A	+/-		09/90 ➧ 12/93	701.820.103 A	**92133**	260 230 80	A/A
TRANSPORTER T4 (90-) 2.5 TDi	D	ACV	M	+/-		09/95 ➧ 06/03	701.820.103 A	**92133**	260 230 80	A/A
TRANSPORTER T4 (90-) 2.5 TDi	D	ACV	M	+/-		09/96 ➧ 06/03	701.820.103 A	**92133**	260 230 80	A/A
TRANSPORTER T4 (90-) 2.5 TDi	D	ACV	A	+/-		05/98 ➧ 06/03	701.820.103 A	**92133**	260 230 80	A/A
TRANSPORTER T4 (90-) 2.5 TDi	D	AHY	M	+/-		05/98 ➧ 09/00	701.820.103 A	**92133**	260 230 80	A/A
TRANSPORTER T4 (90-) 2.5 TDi	D	AHY	M	+/-		05/98 ➧ 09/00	701.820.103 A	**92133**	260 230 80	A/A
TRANSPORTER T4 (90-) 2.5 TDi	D	AJT	M	+/-		05/98 ➧ 06/03	701.820.103 A	**92133**	260 230 80	A/A
TRANSPORTER T4 (90-) 2.5 TDi	D	AJT	M	+/-		05/98 ➧ 06/03	701.820.103 A	**92133**	260 230 80	A/A
TRANSPORTER T4 (90-) 2.5 TDi	D	AUF	A	+/-		11/99 ➧ 06/03	701.820.103 A	**92133**	260 230 80	A/A
TRANSPORTER T4 (90-) 2.5 TDi	D	AUF	A	+/-		11/99 ➧ 06/03	701.820.103 A	**92133**	260 230 80	A/A
TRANSPORTER T4 (90-) 2.5 TDi	D	AXG	M	+/-		09/00 ➧ 06/03	701.820.103 A	**92133**	260 230 80	A/A
TRANSPORTER T4 (90-) 2.5 TDi	D	AXG	M	+/-		09/00 ➧ 06/03	701.820.103 A	**92133**	260 230 80	A/A
TRANSPORTER T4 (90-) 2.5 TDi	D	AYC	M/A	+/-		04/01 ➧ 06/03	701.820.103 A	**92133**	260 230 80	A/A
TRANSPORTER T4 (90-) 2.5 TDi	D	AYC	M/A	+/-		04/01 ➧ 06/03	701.820.103 A	**92133**	260 230 80	A/A
TRANSPORTER T4 (90-) 2.5 TDi	D	AYY	M	+/-		10/01 ➧ 06/03	701.820.103 A	**92133**	260 230 80	A/A
TRANSPORTER T4 (90-) 2.5 TDi	D	AYY	M	+/-		10/01 ➧ 06/03	701.820.103 A	**92133**	260 230 80	A/A
TRANSPORTER T4 (90-) 2.8 i V6	G	AMV	A	+/-		05/00 ➧ 06/03	701.820.103 A	**92133**	260 230 80	A/A
TRANSPORTER T4 (90-) 2.8 i V6	G	AMV	A	+/-		05/00 ➧ 06/03	701.820.103 A	**92133**	260 230 80	A/A

EVAPORATORS

	G/D			AC	Note		OE	Nissens	Dim. H	W	T	Mat.
VOLKSWAGEN LIGHT VAN (../..)												
TRANSPORTER T4 (90-) 2.8 i VR6	G	AES	M/A	+/-		01/96 ➧ 05/00	701.820.103 A+	**92133**	260	230	80	A/A

HEATERS

	G/D			AC	Note		OE		Nissens	Dim. H W T	Mat.
CITROEN LIGHT VAN											
BERLINGO (96-) 1.1 i	G	TU1M	M	-		07/96 ▸ 09/98	6448.78	+	**71156**	234 158 42	ALM
BERLINGO (96-) 1.1 i	G	TU1M	M	-		07/96 ▸ 09/98	6448.80		**71147**	234 158 42	ALM
BERLINGO (96-) 1.1 i	G	TU1M	M	-		10/98 ▸	6448.78	+	**71156**	234 158 42	ALM
BERLINGO (96-) 1.1 i	G	TU1M	M	+		07/96 ▸	6448.78	+	**71156**	234 158 42	ALM
BERLINGO (96-) 1.4 i	G	TU3JP	M	+/-		07/96 ▸ 09/98	6448.78	+	**71156**	234 158 42	ALM
BERLINGO (96-) 1.4 i	G	TU3JP	M	+/-		10/98 ▸	6448.78	+	**71156**	234 158 42	ALM
BERLINGO (96-) 1.6 i	G	TU5JP	M	+/-		07/96 ▸	6448.78	+	**71156**	234 158 42	ALM
BERLINGO (96-) 1.6 i 16V	G	TU5JP4	M	+/-		10/98 ▸	6448.78	+	**71156**	234 158 42	ALM
BERLINGO (96-) 1.8 D	D	XUD7	M	-		06/96 ▸ 10/98	6448.78	+	**71156**	234 158 42	ALM
BERLINGO (96-) 1.8 D	D	XUD7	M	-		11/98 ▸	6448.78	+	**71156**	234 158 42	ALM
BERLINGO (96-) 1.8 D	D	XUD7	M	+		06/96 ▸ 10/98	6448.78	+	**71156**	234 158 42	ALM
BERLINGO (96-) 1.8 D	D	XUD7	M	+		10/98 ▸	6448.78	+	**71156**	234 158 42	ALM
BERLINGO (96-) 1.8 i	G	XU7JB	M	+/-		07/97 ▸ 09/98	6448.78	+	**71156**	234 158 42	ALM
BERLINGO (96-) 1.8 i	G	XU7JB	M	+/-		10/98 ▸	6448.78	+	**71156**	234 158 42	ALM
BERLINGO (96-) 1.9 D	D	XUD9,DW8, DW8B	M	-		06/96 ▸ 10/98	6448.78	+	**71156**	234 158 42	ALM
BERLINGO (96-) 1.9 D	D	XUD9,DW8, DW8B	M	-		11/98 ▸	6448.78	+	**71156**	234 158 42	ALM
BERLINGO (96-) 1.9 D	D	XUD9,DW8, DW8B	M	+		06/96 ▸ 10/98	6448.78	+	**71156**	234 158 42	ALM
BERLINGO (96-) 1.9 D	D	XUD9,DW8, DW8B	M	+		11/98 ▸	6448.78	+	**71156**	234 158 42	ALM
BERLINGO (96-) 2.0 HDi	D	DW10TD	M	+/-		10/99 ▸	6448.78	+	**71156**	234 158 42	ALM
BERLINGO (02-) 1.1 i	G	TU1JP	M	+/-		12/02 ▸	6448.78	+	**71156**	234 158 42	ALM
BERLINGO (02-) 1.1 i	G	TU1JP	M	+/-		12/02 ▸	6448.78	+	**71156**	234 158 42	ALM
BERLINGO (02-) 1.4 i	G	TU3JP	M	+/-		12/02 ▸	6448.78	+	**71156**	234 158 42	ALM
BERLINGO (02-) 1.4 i	G	TU3JP	M	+/-		12/02 ▸	6448.78	+	**71156**	234 158 42	ALM
BERLINGO (02-) 1.6 HDI	D	DV6B	M	+/-		12/02 ▸	6448.78	+	**71156**	234 158 42	ALM
BERLINGO (02-) 1.6 HDI 16V	D	DV6TED4	M	+/-		12/02 ▸	6448.78	+	**71156**	234 158 42	ALM
BERLINGO (02-) 1.6 i 16V	G	TU5JP4	M	+/-		12/02 ▸	6448.78	+	**71156**	234 158 42	ALM
BERLINGO (02-) 1.6 i 16V	G	TU5JP4	M	+/-		12/02 ▸	6448.78	+	**71156**	234 158 42	ALM
BERLINGO (02-) 1.9 D	D	DW8B	M	+/-		12/02 ▸	6448.78	+	**71156**	234 158 42	ALM
BERLINGO (02-) 2.0 HDi	D	DW10TD	M	+/-		12/02 ▸	6448.78	+	**71156**	234 158 42	ALM
C 15 (84-) 1.0	G	XV/TU9	M	-		07/88 ▸	75515461		**71130**	200 175 42	P/A
C 15 (84-) 1.0	G	XV/TU9	M	-		11/84 ▸ 06/88	75515461		**71130**	200 175 42	P/A
C 15 (84-) 1.1	G	E1A	M	-		07/87 ▸ 06/88	75515461		**71130**	200 175 42	P/A
C 15 (84-) 1.1	G	E1A	M	-		07/88 ▸	75515461		**71130**	200 175 42	P/A
C 15 (84-) 1.1	G	E1A	M	-		11/84 ▸ 06/88	75515461		**71130**	200 175 42	P/A
C 15 (84-) 1.1 i	G	TU1M	M	-		07/87 ▸ 06/88	75515461		**71130**	200 175 42	P/A
C 15 (84-) 1.1 i	G	TU1M	M	-		07/88 ▸	75515461		**71130**	200 175 42	P/A
C 15 (84-) 1.1 i	G	TU1M	M	-		11/84 ▸ 06/88	75515461		**71130**	200 175 42	P/A
C 15 (84-) 1.3	G	G1A	M	-		07/87 ▸ 06/88	75515461		**71130**	200 175 42	P/A
C 15 (84-) 1.4	G	K3A	M	-		07/88 ▸	75515461		**71130**	200 175 42	P/A
C 15 (84-) 1.4	G	K3A	M	-		07/88 ▸	75515461		**71130**	200 175 42	P/A
C 15 (84-) 1.4	G	K3A	M	-		11/84 ▸ 06/88	75515461		**71130**	200 175 42	P/A
C 15 (84-) 1.4	G	TU3A	M	-		07/88 ▸	75515461		**71130**	200 175 42	P/A
C 15 (84-) 1.4	G	TU3A	M	-		11/84 ▸ 06/88	75515461		**71130**	200 175 42	P/A
C 15 (84-) 1.4	G	XY7	M	-		11/84 ▸ 06/88	75515461		**71130**	200 175 42	P/A
C 15 (84-) 1.4 i	G	TU3FM	M	-		07/88 ▸	75515461		**71130**	200 175 42	P/A
C 15 (84-) 1.4 i	G	TU3FM	M	-		11/84 ▸ 06/88	75515461		**71130**	200 175 42	P/A
C 15 (84-) 1.4 i	G	TU3M	M	-		07/88 ▸	75515461		**71130**	200 175 42	P/A
C 15 (84-) 1.4 i	G	TU3M	M	-		11/84 ▸ 06/88	75515461		**71130**	200 175 42	P/A
C 15 (84-) 1.8 D	D	XUD7	M	-		04/94 ▸	75515461		**71130**	200 175 42	P/A
C 15 (84-) 1.8 D	D	XUD7	M	-		07/88 ▸ 03/94	75515461		**71130**	200 175 42	P/A
C 15 (84-) 1.8 D	D	XUD7	M	-		11/84 ▸ 06/88	75515461		**71130**	200 175 42	P/A

HEATERS

	G/D			AC	Note		OE	Nissens	Dim. H W T	Mat.
CITROEN LIGHT VAN (../..)										
C 15 (84-) 1.9 D	D	XUD7	M	-		04/94 ➧	75515461	**71130**	200 175 42	P/A
C 25 (81-) 1.8	G	XM7T	M	-		06/85 ➧ 02/94	5947797 +	**71148**	237 180 38	M/C
C 25 (81-) 1.8	G	XM7T	M	-		11/81 ➧ 05/85	ZF5929122	**72980**	227 150 40	P/A
C 25 (81-) 1.8	G	XN1T	M	-		11/81 ➧ 05/85	ZF5929122	**72980**	227 150 40	P/A
C 25 (81-) 1.9 D	D	XUD9A	M	-		06/85 ➧ 02/94	ZF07619387	**71144**	232 192 42	P/A
C 25 (81-) 1.9 TD	D	M705T	M	-		07/88 ➧ 02/94	5947797 +	**71148**	237 180 38	M/C
C 25 (81-) 2.0	G	XN1T	M	-		06/85 ➧ 02/94	5947797 +	**71148**	237 180 38	M/C
C 25 (81-) 2.5 D	D	CRD93	M	-		06/85 ➧ 02/94	5947797 +	**71148**	237 180 38	M/C
C 25 (81-) 2.5 D	D	CRD93	M	-		06/85 ➧ 02/94	5947797 +	**71148**	237 180 38	M/C
C 25 (81-) 2.5 D	D	CRD93	M	-	TROPIC	11/81 ➧ 02/94	ZF5929122	**72980**	227 150 40	P/A
C 25 (81-) 2.5 D	D	CRD93	M	-		11/81 ➧ 05/85	ZF5929122	**72980**	227 150 40	P/A
C 25 (81-) 2.5 TD	D	CRD93LS	M	-		07/88 ➧ 02/94	5947797 +	**71148**	237 180 38	M/C
DISPATCH (95-) 1.6 i	G	SPI	M	+		10/95 ➧	6448.A7	**71149**	303 170 40	P/A
DISPATCH (95-) 1.9 D	D	DW8	M	-		10/95 ➧	6448.A7	**71149**	303 170 40	P/A
DISPATCH (95-) 1.9 D	D	DW8	M	+		10/95 ➧	6448.A7	**71149**	303 170 40	P/A
DISPATCH (95-) 1.9 D	D	XUD9A	M	-		10/95 ➧	6448.A7	**71149**	303 170 40	P/A
DISPATCH (95-) 1.9 D	D	XUD9A	M	+		10/95 ➧	6448.A7	**71149**	303 170 40	P/A
DISPATCH (95-) 1.9 TD	D	XUDTE	M	+/-		10/95 ➧	6448.A7	**71149**	303 170 40	P/A
DISPATCH (95-) 2.0 HDi	D	DW10ATED	M	+/-		02/00 ➧	6448.A7	**71149**	303 170 40	P/A
DISPATCH (95-) 2.1 TD	D	XUD11ATE	M	+/-		10/95 ➧	6448.A7	**71149**	303 170 40	P/A
JUMPER (94-) 1.9 D	D	XUD9AU	M	+/-		02/94 ➧ 01/02	1307156080 +	**73984**	220 195 42	ALM
JUMPER (94-) 1.9 D	D	XUD9AU	M	+/-		02/94 ➧ 01/02	6448.H8 +	**73986**	300 200 32	A/A
JUMPER (94-) 1.9 D	D	XUD9AU	M	+/-		02/94 ➧ 01/02	1307156080 +	**73987**	220 195 42	ALM
JUMPER (94-) 1.9 D	D	XUD9AU	M	+/-		02/94 ➧ 01/02	46722710 +	**71443**	260 171 35	M/C
JUMPER (94-) 1.9 TD	D	XUD9UTF	M	+/-		02/94 ➧ 01/02	1307156080 +	**73984**	220 195 42	ALM
JUMPER (94-) 2.0	G	XU102C	M	+/-	TROPIC	02/94 ➧ 01/02	1307156080 +	**73984**	220 195 42	ALM
JUMPER (94-) 2.0	G	XU10J2U	M	+		02/94 ➧ 01/02	1307156080 +	**73984**	220 195 42	ALM
JUMPER (94-) 2.5 D	D	DJ5	M	-		02/94 ➧ 01/02	1307156080 +	**73984**	220 195 42	ALM
JUMPER (94-) 2.5 D	D	DJ5	M	+		02/94 ➧ 01/02	1307156080 +	**73984**	220 195 42	ALM
JUMPER (94-) 2.5 TD	D	DJ5T	M	-		02/94 ➧ 01/02	1307156080 +	**73984**	220 195 42	ALM
JUMPER (94-) 2.5 TD	D	DJ5T	M	+		02/94 ➧ 01/02	1307156080 +	**73984**	220 195 42	ALM
JUMPER (94-) 2.8 D	D	SOFIM	M	+/-		02/94 ➧ 01/02	1307156080 +	**73984**	220 195 42	ALM
JUMPER (94-) 2.8 HDi	D	8140-43/63	M	+/-		02/94 ➧ 01/02	1307156080 +	**73984**	220 195 42	ALM
JUMPER (94-) 2.8 TD	D	8140-43/63	M	+/-		02/94 ➧ 01/02	1307156080 +	**73984**	220 195 42	ALM
JUMPER (02-) 2.0 HDi	D	DW10JTD	M	-		01/02 ➧	6448.H8	**73986**	300 200 32	A/A
JUMPER (02-) 2.0 HDi	D	DW10JTD	M	+		01/02 ➧	6448.H8	**73986**	300 200 32	A/A
JUMPER (02-) 2.0 i	G	XU10J2	M	+/-		01/02 ➧	6448.H8	**73986**	300 200 32	A/A
JUMPER (02-) 2.2 HDi	D	DW12TED4	M	-		01/02 ➧	6448.H8	**73986**	300 200 32	A/A
JUMPER (02-) 2.2 HDi	D	DW12TED4	M	+		01/02 ➧	6448.H8	**73986**	300 200 32	A/A
JUMPER (02-) 2.8 HDi	D	F28TDCR	M	-		01/02 ➧	6448.H8	**73986**	300 200 32	A/A
JUMPER (02-) 2.8 HDi	D	F28TDCR	M	+		01/02 ➧	6448.H8	**73986**	300 200 32	A/A
JUMPY (95-) 1.6 i	G	SPI	M	+		10/95 ➧	6448.A7	**71149**	303 170 40	P/A
JUMPY (95-) 1.9 D	D	DW8	M	-		10/95 ➧	6448.A7	**71149**	303 170 40	P/A
JUMPY (95-) 1.9 D	D	DW8	M	+		10/95 ➧	6448.A7	**71149**	303 170 40	P/A
JUMPY (95-) 1.9 D	D	XUD9A	M	-		10/95 ➧	6448.A7	**71149**	303 170 40	P/A
JUMPY (95-) 1.9 D	D	XUD9A	M	+		10/95 ➧	6448.A7	**71149**	303 170 40	P/A
JUMPY (95-) 1.9 TD	D	XUDTE	M	+/-		10/95 ➧	6448.A7	**71149**	303 170 40	P/A
JUMPY (95-) 2.0 HDi	D	DW10ATED	M	+/-		02/00 ➧	6448.A7	**71149**	303 170 40	P/A
JUMPY (95-) 2.1 TD	D	XUD11ATE	M	+/-		10/95 ➧	6448.A7	**71149**	303 170 40	P/A

HEATERS

	G/D			AC	Note		OE	Nissens	Dim. H W T	Mat.
CITROEN LIGHT VAN (../..)										
LNA (82-) 1.1	G	XW7	M	-		07/82 ▸	92512385	**72960**	162 138 42	P/A
RELAY (02-) 2.0 HDi	D	DW10JTD	M	-		01/02 ▸	6448.H8	**73986**	300 200 32	A/A
RELAY (02-) 2.0 HDi	D	DW10JTD	M	+		01/02 ▸	6448.H8	**73986**	300 200 32	A/A
RELAY (02-) 2.0 i	G	XU10J2	M	+/-		01/02 ▸	6448.H8	**73986**	300 200 32	A/A
RELAY (02-) 2.2 HDi	D	DW12TED4	M	-		01/02 ▸	6448.H8	**73986**	300 200 32	A/A
RELAY (02-) 2.2 HDi	D	DW12TED4	M	+		01/02 ▸	6448.H8	**73986**	300 200 32	A/A
RELAY (02-) 2.8 HDi	D	F28TDCR	M	-		01/02 ▸	6448.H8	**73986**	300 200 32	A/A
RELAY (02-) 2.8 HDi	D	F28TDCR	M	+		01/02 ▸	6448.H8	**73986**	300 200 32	A/A
RELAY (94-) 1.9 D	D	XUD9AU	M	+/-		02/94 ▸ 01/02	1307156080 +	**73984**	220 195 42	ALM
RELAY (94-) 1.9 D	D	XUD9AU	M	+/-		02/94 ▸ 01/02	6448.H8 +	**73986**	300 200 32	A/A
RELAY (94-) 1.9 D	D	XUD9AU	M	+/-		02/94 ▸ 01/02	1307156080 +	**73987**	220 195 42	ALM
RELAY (94-) 1.9 D	D	XUD9AU	M	+/-		02/94 ▸ 01/02	46722710 +	**71443**	260 171 35	M/C
RELAY (94-) 1.9 TD	D	XUD9UTF	M	+/-		02/94 ▸ 01/02	1307156080 +	**73984**	220 195 42	ALM
RELAY (94-) 2.0	G	XU102C	M	+/-		02/94 ▸ 01/02	1307156080 +	**73984**	220 195 42	ALM
RELAY (94-) 2.0	G	XU10J2U	M	+		02/94 ▸ 01/02	1307156080 +	**73984**	220 195 42	ALM
RELAY (94-) 2.5 D	D	DJ5	M	-		02/94 ▸ 01/02	1307156080 +	**73984**	220 195 42	ALM
RELAY (94-) 2.5 D	D	DJ5	M	+		02/94 ▸ 01/02	1307156080 +	**73984**	220 195 42	ALM
RELAY (94-) 2.5 TD	D	DJ5T	M	-		02/94 ▸ 01/02	1307156080 +	**73984**	220 195 42	ALM
RELAY (94-) 2.5 TD	D	DJ5T	M	+		02/94 ▸ 01/02	1307156080 +	**73984**	220 195 42	ALM
RELAY (94-) 2.8 D	D	2798	M	+/-		02/94 ▸ 01/02	1307156080 +	**73984**	220 195 42	ALM
RELAY (94-) 2.8 HDi	D	8140-43/63	M	+/-		02/94 ▸ 01/02	1307156080 +	**73984**	220 195 42	ALM
RELAY (94-) 2.8 TD	D	8140-43/63	M	+/-		02/94 ▸ 01/02	1307156080 +	**73984**	220 195 42	ALM
FIAT LIGHT VAN										
DOBLO (01-) 1.2 i	G	223 A5.000	M	-		03/01 ▸	46722928 +	**71451**	208 158 32	P/A
DOBLO (01-) 1.2 i	G	223 A5.000	M	+		03/01 ▸	46722928 +	**71451**	208 158 32	P/A
DOBLO (01-) 1.3 JTD	D	188 A9.000	M	-		01/03 ▸	46722928 +	**71451**	208 158 32	P/A
DOBLO (01-) 1.3 JTD	D	188 A9.000	M	+		01/03 ▸	46722928 +	**71451**	208 158 32	P/A
DOBLO (01-) 1.4 i	G	350 A1.000	M	-		10/01 ▸	46722928 +	**71451**	208 158 32	P/A
DOBLO (01-) 1.4 i	G	350 A1.000	M	+		10/01 ▸	46722928 +	**71451**	208 158 32	P/A
DOBLO (01-) 1.6 i 16V	G	182 B6.000	M	-		09/05 ▸	46722928 +	**71451**	208 158 32	P/A
DOBLO (01-) 1.6 i 16V	G	182 B6.000	M	-		10/01 ▸ 08/05	46722928 +	**71451**	208 158 32	P/A
DOBLO (01-) 1.6 i 16V	G	182 B6.000	M	+		09/05 ▸	46722928 +	**71451**	208 158 32	P/A
DOBLO (01-) 1.6 i 16V	G	182 B6.000	M	+		10/01 ▸ 05/05	46722928 +	**71451**	208 158 32	P/A
DOBLO (01-) 1.9 D	D	223 A6.000	M	-		03/01 ▸	46722928 +	**71451**	208 158 32	P/A
DOBLO (01-) 1.9 D	D	223 A6.000	M	+		03/01 ▸	46722928 +	**71451**	208 158 32	P/A
DOBLO (01-) 1.9 JTD	D	182 B9.000	M	-		10/01 ▸	46722928 +	**71451**	208 158 32	P/A
DOBLO (01-) 1.9 JTD	D	182 B9.000	M	+		10/01 ▸	46722928 +	**71451**	208 158 32	P/A
DUCATO (81-) 1.8	G	XM7T	M	-		11/81 ▸	5929122 +	**72980**	227 150 40	P/A
DUCATO (81-) 1.8	G	XM7T	M	-		11/81 ▸	5947797 +	**71148**	237 180 38	M/C
DUCATO (81-) 1.8	G	XM7T	M	-		11/81 ▸	6448.62 +	**73988**	243 177 42	ALM
DUCATO (81-) 1.9 D	D	XUD9A	M	-		11/81 ▸	+	**71144**	232 192 42	P/A
DUCATO (81-) 1.9 TD	D	1929 F280A	M	-		01/81 ▸	5929122 +	**72980**	227 150 40	P/A
DUCATO (81-) 2.0	G	XN1T	M	-		11/81 ▸	5929122 +	**72980**	227 150 40	P/A
DUCATO (81-) 2.5 D	D	2499 CRD3	M	-		11/81 ▸	5929122 +	**72980**	227 150 40	P/A
DUCATO (81-) 2.5 TD	D	2499 CRD3	M	-		11/81 ▸	5929122 +	**72980**	227 150 40	P/A
DUCATO (94-) 1.9 D	D	D9B	M	+/-		02/94 ▸ 01/02	1307156080 +	**73984**	220 195 42	ALM
DUCATO (94-) 1.9 D	D	D9B	M	+/-		02/94 ▸ 01/02	6448.H8 +	**73986**	300 200 32	A/A
DUCATO (94-) 1.9 D	D	D9B	M	+/-		02/94 ▸ 01/02	46722710 +	**71443**	260 171 35	M/C
DUCATO (94-) 1.9 D	D	D9B	M	+/-		02/94 ▸ 01/02	1321310080	**73987**	220 195 42	ALM

HEATERS

	G/D			AC	Note		OE	Nissens	Dim. H W T	Mat.
FIAT LIGHT VAN (../..)										
DUCATO (94-) 1.9 TD	D	XUD9TF	M	-		02/94 ➧ 01/02	1307156080 +	**73984**	220 195 42	ALM
DUCATO (94-) 1.9 TD	D	XUD9TF	M	+		02/94 ➧ 01/02	1307156080 +	**73984**	220 195 42	ALM
DUCATO (94-) 2.0 i	G	RFW	M	+		02/94 ➧ 01/02	1307156080 +	**73984**	220 195 42	ALM
DUCATO (94-) 2.0 JTD	D	DW10TD	M	-		02/94 ➧ 01/02	1307156080 +	**73984**	220 195 42	ALM
DUCATO (94-) 2.0 JTD	D	DW10TD	M	+		02/94 ➧ 01/02	1307156080 +	**73984**	220 195 42	ALM
DUCATO (94-) 2.5 D	D	8140.67	M	-		02/94 ➧ 08/98	1307156080 +	**73984**	220 195 42	ALM
DUCATO (94-) 2.5 D	D	8140.67	M	+		02/94 ➧ 01/02	1307156080 +	**73984**	220 195 42	ALM
DUCATO (94-) 2.5 JTD	D	8140.47	M	-		02/94 ➧ 01/02	1307156080 +	**73984**	220 195 42	ALM
DUCATO (94-) 2.5 JTD	D	8140.47	M	+		02/94 ➧ 01/02	1307156080 +	**73984**	220 195 42	ALM
DUCATO (94-) 2.5 TD	D	8140.47	M	-		02/94 ➧ 01/02	1307156080 +	**73984**	220 195 42	ALM
DUCATO (94-) 2.5 TD	D	8140.47	M	+		02/94 ➧ 01/02	1307156080 +	**73984**	220 195 42	ALM
DUCATO (94-) 2.8 D	D	8140.63	M	+/-		02/94 ➧ 01/02	1307156080 +	**73984**	220 195 42	ALM
DUCATO (94-) 2.8 JTD	D	8140.43S	M	+/-		02/94 ➧ 11/01	1307156080 +	**73984**	220 195 42	ALM
DUCATO (94-) 2.8 TD	D	8140.43	M	+/-		02/94 ➧ 11/01	1307156080 +	**73984**	220 195 42	ALM
DUCATO (02-) 2.0 i	G	RFL	M	+/-		01/02 ➧	46722710	**73986**	300 200 32	A/A
DUCATO (02-) 2.0 JTD	D	DW10TD	M	-		01/02 ➧	46722710	**73986**	300 200 32	A/A
DUCATO (02-) 2.0 JTD	D	DW10TD	M	+		01/02 ➧	46722710	**73986**	300 200 32	A/A
DUCATO (02-) 2.2 JTD	D	2179 DW12TED	M	-		01/02 ➧	46722710	**73986**	300 200 32	A/A
DUCATO (02-) 2.2 JTD	D	2179 DW12TED	M	+		01/02 ➧	46722710	**73986**	300 200 32	A/A
DUCATO (02-) 2.3 JTD	D	F1AE0481C	M	-		01/02 ➧	46722710	**73986**	300 200 32	A/A
DUCATO (02-) 2.3 JTD	D	F1AE0481C	M	+		01/02 ➧	46722710	**73986**	300 200 32	A/A
DUCATO (02-) 2.8 JTD	D	8140.43S	M	-		01/02 ➧	46722710	**73986**	300 200 32	A/A
DUCATO (02-) 2.8 JTD	D	8140.43S	M	+		01/02 ➧	46722710	**73986**	300 200 32	A/A
DUCATO (02-) 2.8 TD	D	8140.43S	M	-		01/02 ➧	46722710	**73986**	300 200 32	A/A
FIORINO (88-) 1.1	G	146 A9.000	M	-		08/88 ➧	7754055	**71429**	216 157 42	P/A
FIORINO (88-) 1.3	G	1301	M	-		08/88 ➧	7754055	**71429**	216 157 42	P/A
FIORINO (88-) 1.4 i	G	146 C5.000	M	-		08/88 ➧	7754055	**71429**	216 157 42	P/A
FIORINO (88-) 1.5 i	G	146 C6.000	M	-		08/88 ➧	7754055	**71429**	216 157 42	P/A
FIORINO (88-) 1.6 i	G	146 C6.000	M	-		08/88 ➧	7754055	**71429**	216 157 42	P/A
FIORINO (88-) 1.7 D	D	149 B3.000	M	-		07/93 ➧	7754055	**71429**	216 157 42	P/A
FIORINO (88-) 1.7 D	D	149 B3.000	M	-		08/88 ➧ 06/93	7754055	**71429**	216 157 42	P/A
FIORINO (88-) 1.7 TD	D	146 D7.000	M	-		07/93 ➧	7754055	**71429**	216 157 42	P/A
SCUDO (96-) 1.6 i	G	220 A2.000	M	-		07/95 ➧	9566944680	**71149**	303 170 40	P/A
SCUDO (96-) 1.6 i	G	220 A2.000	M	+		07/95 ➧	9566944680	**71149**	303 170 40	P/A
SCUDO (96-) 1.9 D	D	D9B	M	-		07/95 ➧	9566944680	**71149**	303 170 40	P/A
SCUDO (96-) 1.9 D	D	D9B	M	+		07/95 ➧	9566944680	**71149**	303 170 40	P/A
SCUDO (96-) 1.9 TD	D	D8B	M	+/-		07/95 ➧	9566944680	**71149**	303 170 40	P/A
SCUDO (96-) 2.0 i 16V	G	RFN	M	-		07/95 ➧	9566944680	**71149**	303 170 40	P/A
SCUDO (96-) 2.0 i 16V	G	RFN	M	+		07/95 ➧	9566944680	**71149**	303 170 40	P/A
SCUDO (96-) 2.0 JTD	D	RHX	M	+/-		02/00 ➧	9566944680	**71149**	303 170 40	P/A
SCUDO (96-) 2.0 JTD	D	RHZ	M	+/-		02/00 ➧	9566944680	**71149**	303 170 40	P/A
TALENTO (89-) 1.9 D	D	XN1T	M	-		03/89 ➧ 03/94	+	**71144**	232 192 42	P/A
TALENTO (89-) 1.9 D	D	XN1T	M	-		03/89 ➧ 03/94	+	**72980**	227 150 40	P/A
TALENTO (89-) 1.9 D	D	XN1T	M	-		03/89 ➧ 03/94		**73988**	243 177 42	ALM
TALENTO (89-) 2.0	G	XN1T	M	-		03/89 ➧ 03/94	+	**71148**	237 180 38	M/C
FORD LIGHT VAN										
EXPLORER (91-) 4.0 i	G		A	+/-		01/91 ➧ 11/94	3500417	**71766**	195 147 42	P/A
EXPLORER (91-) 4.0 i	G		A	+/-		09/96 ➧ 09/00	3500417	**71766**	195 147 42	P/A
EXPLORER (91-) 4.0 i	G		A	+/-		12/94 ➧ 08/96	3500417	**71766**	195 147 42	P/A

HEATERS

	G/D			AC	Note		OE	Nissens	Dim. H W T	Mat.
FORD LIGHT VAN (../..)										
MAVERICK (93-) 2.4 i	G	KA24E	M	+/-		02/93 ➧ 05/96	1956603 +	**72050**	167 148 33	M/C
MAVERICK (93-) 2.7 TDi	D	TD27T	M	+/-		02/93 ➧ 05/96	1956603 +	**72050**	167 148 33	M/C
MAVERICK (96-) 2.4 i 12V	D	KA24E	M	+/-		05/96 ➧	1956603 +	**72050**	167 148 33	M/C
MAVERICK (96-) 2.7 TDi	D	TD27T	M	+/-		05/96 ➧	1956603 +	**72050**	167 148 33	M/C
MAVERICK (96-) 2.7 TDi	D	TD27T	A	+/-		05/96 ➧	1956603 +	**72050**	167 148 33	M/C
MAVERICK (02-) 2.0 i 16V	G		M/A	+/-		09/02 ➧	4095715 +	**71767**	153 196 52	P/A
MAVERICK (02-) 2.3 i 16V	G		M/A	+/-		09/02 ➧	EC-0161-A08	**71767**	153 196 52	P/A
MAVERICK (02-) 3.0 i V6 24V	G		M/A	+/-		09/02 ➧	4095715 +	**71767**	153 196 52	P/A
RANGER (98-) 2.5 D	D	WL	M/A	+/-		06/98 ➧	3945319 +	**71766**	195 147 42	P/A
RANGER (98-) 2.5 TD	D	WLT	M/A	+/-		01/03 ➧	3945319 +	**71766**	195 147 42	P/A
RANGER (98-) 2.5 TD	D	WLT	M/A	+/-		06/98 ➧ 01/03	3945319 +	**71766**	195 147 42	P/A
RANGER (98-) 2.9 D	D		M/A	+/-		06/98 ➧	3945319 +	**71766**	195 147 42	P/A
SIERRA PICKUP (87-) 1.8 TD	D	D18T	M	-		10/87 ➧ 04/93	1041092 +	**71761**	249 132 33	P/C
SIERRA PICKUP (87-) 1.8 TD	D	D18T	M	-		10/87 ➧ 04/93	1041092 +	**71762**	249 133 35	P/C
SIERRA PICKUP (87-) 2.0 i	G		M	-		10/87 ➧ 04/93	1041092 +	**71761**	249 132 33	P/C
TRANSIT (78-) 2.4 D	D	D24	M	-		01/78 ➧ 01/82	73VBK328 BA	**71759**	220 140 42	M/C
TRANSIT (78-) 2.4 D	D	D24	M	-		02/82 ➧ 08/83	73VBK328 BA	**71759**	220 140 42	M/C
TRANSIT (78-) 2.4 D	D	D24	M	-		08/83 ➧ 12/84	73VBK328 BA	**71759**	220 140 42	M/C
TRANSIT (78-) 2.5 D	D	D25	M	-		03/84 ➧ 11/85	73VBK328 BA	**71759**	220 140 42	M/C
TRANSIT (86-) 1.6	G	TL16	M	-		11/85 ➧ 08/91	89VW18476BA	**71757**	218 152 44	M/C
TRANSIT (86-) 1.6	G	TL16	A	-		10/88 ➧ 08/91	89VW18476BA	**71757**	218 152 44	M/C
TRANSIT (86-) 1.6	G	TL16	A	-		11/85 ➧ 10/88	89VW18476BA	**71757**	218 152 44	M/C
TRANSIT (86-) 2.0	G	TL20/TL20I	M	-		11/85 ➧ 08/91	89VW18476BA	**71757**	218 152 44	M/C
TRANSIT (86-) 2.0	G	TL20/TL20I	A	-		10/88 ➧ 08/91	89VW18476BA	**71757**	218 152 44	M/C
TRANSIT (86-) 2.0	G	TL20/TL20I	A	-		11/85 ➧ 10/88	89VW18476BA	**71757**	218 152 44	M/C
TRANSIT (86-) 2.5 D	D	D25	M	-		11/85 ➧ 08/91	89VW18476BA	**71757**	218 152 44	M/C
TRANSIT (86-) 2.5 D	D	D25	A	-		10/88 ➧ 08/91	89VW18476BA	**71757**	218 152 44	M/C
TRANSIT (86-) 2.5 D	D	D25	A	-		11/85 ➧ 10/88	89VW18476BA	**71757**	218 152 44	M/C
TRANSIT (92-) 2.0 EFi	G	TL20	M	-		08/91 ➧ 08/94	88VW18539AB	**71758**	245 150 38	M/C
TRANSIT (92-) 2.5 D	D	D25NA	M	-		08/91 ➧ 08/94	88VW18539AB	**71758**	245 150 38	M/C
TRANSIT (92-) 2.5 TD	D	TD25NA	M	-		08/91 ➧ 08/94	88VW18539AB	**71758**	245 150 38	M/C
TRANSIT (94-) 2.0 EFi	G		M	-		08/94 ➧	1092721 +	**71740**	245 152 52	P/A
TRANSIT (94-) 2.0 EFi	G		M	+		08/94 ➧	95VW18476BC+	**71741**	245 152 52	P/A
TRANSIT (94-) 2.5 D	D		M	-		08/94 ➧	1092721 +	**71740**	245 152 52	P/A
TRANSIT (94-) 2.5 D	D		M	+		08/94 ➧	95VW18476BC+	**71741**	245 152 52	P/A
TRANSIT (94-) 2.5 TD	D		M	-		08/94 ➧	1092721 +	**71740**	245 152 52	P/A
TRANSIT (94-) 2.5 TD	D		M	+		08/94 ➧	95VW18476BC+	**71741**	245 152 52	P/A
TRANSIT (94-) 2.5 TD	D		A	-		08/94 ➧	1092721 +	**71740**	245 152 52	P/A
TRANSIT (94-) 2.5 TD	D		A	+		08/94 ➧	95VW18476BC+	**71741**	245 152 52	P/A
TRANSIT (94-) 2.5 TDi	D		M	-		10/96 ➧	1092721 +	**71740**	245 152 52	P/A
TRANSIT (94-) 2.5 TDi	D		M	+		08/94 ➧	95VW18476BC+	**71741**	245 152 52	P/A
TRANSIT (00-) 2.0 D 75 HP	D		M	+/-		08/00 ➧	YC1H18B539AA+	**71768**	247 146 48	P/A
TRANSIT (00-) 2.0 D 75 HP	D		M	+/-		08/00 ➧	YC1H18B539BA+	**71769**	247 146 48	P/A
TRANSIT (00-) 2.0 D 85 HP	D		M	+/-		08/00 ➧	YC1H18B539AA+	**71768**	247 146 48	P/A
TRANSIT (00-) 2.0 D 100 HP	D		M	+/-		08/00 ➧	YC1H18B539AA+	**71768**	247 146 48	P/A
TRANSIT (00-) 2.0 TDCI 125 HP	D		M	+/-		08/00 ➧	YC1H18B539AA+	**71768**	247 146 48	P/A
TRANSIT (00-) 2.3 i 16V	G		M	+/-		01/00 ➧	YC1H18B539AA+	**71768**	247 146 48	P/A
TRANSIT (00-) 2.4 D 75 HP	D		M	-		01/00 ➧	YC1H18B539BA+	**71769**	247 146 48	P/A

HEATERS

	G/D			AC	Note		OE	Nissens	Dim. H W T	Mat.
FORD LIGHT VAN (../..)										
TRANSIT (00-) 2.4 D 75 HP	D		M	+		01/00 ➧	YC1H18B539AA	**71768**	247 146 48	P/A
TRANSIT (00-) 2.4 D 90 HP	D		M	-		01/00 ➧	YC1H18B539BA+	**71769**	247 146 48	P/A
TRANSIT (00-) 2.4 D 90 HP	D		M	+		01/00 ➧	YC1H18B539AA	**71768**	247 146 48	P/A
TRANSIT (00-) 2.4 D 115 HP	D		M	-		01/00 ➧	YC1H18B539BA+	**71769**	247 146 48	P/A
TRANSIT (00-) 2.4 D 115 HP	D		M	+		07/00 ➧	YC1H18B539AA	**71768**	247 146 48	P/A
TRANSIT (00-) 2.4 D 120 HP	D		M	-		01/00 ➧	YC1H18B539BA+	**71769**	247 146 48	P/A
TRANSIT (00-) 2.4 D 120 HP	D		M	+		07/00 ➧	YC1H18B539AA	**71768**	247 146 48	P/A
TRANSIT (00-) 2.4 D 125 HP	D		M	-		01/00 ➧	YC1H18B539BA+	**71769**	247 146 48	P/A
TRANSIT (00-) 2.4 D 125 HP	D		M	+		07/00 ➧	YC1H18B539AA	**71768**	247 146 48	P/A
TRANSIT (00-) 2.4 TDCI 135 HP	D		M	-		03/04 ➧	YC1H18B539BA+	**71769**	247 146 48	P/A
TRANSIT (00-) 2.4 TDCI 135 HP	D		M	+		03/04 ➧	YC1H18B539AA	**71768**	247 146 48	P/A
TRANSIT CONNECT (02-) 1.8 Di	D		M	-		05/02 ➧	1062254 +	**71747**	207 196 52	P/A
TRANSIT CONNECT (02-) 1.8 Di	D		M	-		08/02 ➧	1062254 +	**71747**	207 196 52	P/A
TRANSIT CONNECT (02-) 1.8 Di	D		M	+	75 HP	05/02 ➧	1062254 +	**71747**	207 196 52	P/A
TRANSIT CONNECT (02-) 1.8 Di	D		M	+	90 HP	08/02 ➧	1062254 +	**71747**	207 196 52	P/A
TRANSIT CONNECT (02-) 1.8 i 16V	G		M	-		05/02 ➧	1062254 +	**71747**	207 196 52	P/A
TRANSIT CONNECT (02-) 1.8 i 16V	G		M	+		05/02 ➧	1062254 +	**71747**	207 196 52	P/A
TRANSIT CONNECT (02-) 1.8 TDCi	D		M	+	75 HP	08/02 ➧	1062254 +	**71747**	207 196 52	P/A
TRANSIT CONNECT (02-) 1.8 TDCi	D		M	+	90 HP	08/02 ➧	1062254 +	**71747**	207 196 52	P/A
HYUNDAI LIGHT VAN										
H-100 MINI BUS (93-) 2.4 i	G	G4CS	M	-		07/93 ➧	97211-43030+	**77611**	165 170 44	A/A
H-100 MINI BUS (93-) 2.4 i	G	G4CS	M	-		07/93 ➧	97211-43010+	**77608**	166 164 42	A/A
H-100 MINI BUS (93-) 2.4 i	G	G4CS	M	+		07/93 ➧	97211-43030+	**77611**	165 170 44	A/A
H-100 MINI BUS (93-) 2.5 D	D	D4BA	M	+/-		07/93 ➧	97211-43030+	**77611**	165 170 44	A/A
H-100 MINI BUS (93-) 2.5 D	D	D4BB	M	+/-		07/93 ➧	+	**77608**	166 164 42	A/A
H-100 MINI BUS (93-) 2.5 TD	D	D4BF	M	+/-		07/93 ➧	97211-43030+	**77611**	165 170 44	A/A
H-100 MINI BUS (93-) 2.6 TD	D		M	+/-		07/93 ➧	97211-43030+	**77611**	165 170 44	A/A
H-100 MINI BUS (93-) 2.6 TD	D		A	+/-		07/93 ➧	97211-43030+	**77611**	165 170 44	A/A
H-100 PORTER (93-) 2.5 D	D	D4BA	M	-		07/93 ➧	97211-43010+	**77608**	166 164 42	A/A
H-100 PORTER (93-) 2.5 TD	D	D4BX	M	-		07/93 ➧	97211-43010+	**77608**	166 164 42	A/A
H-100 PORTER (97-) 2.4 i	G	G4CS	M	+/-		06/96 ➧	97211-4B000	**77617**	166 170 42	P/C
H-100 PORTER (97-) 2.5 D	D	D4BA	M	+/-		06/96 ➧	97211-4B000	**77617**	166 170 42	P/C
H-100 PORTER (97-) 2.5 D	D	D4BB	M	+/-		06/96 ➧	97211-4B000	**77617**	166 170 42	P/C
H-100 PORTER (97-) 2.5 TD	D	D4BF	M	+/-		06/96 ➧	97211-4B000	**77617**	166 170 42	P/C
H-100 PORTER (97-) 2.6 TD	D	D4BB	M	+/-		06/96 ➧	97211-4B000	**77617**	166 170 42	P/C
H-200 (97-) 2.4 i	G	G4CS	M	+/-		10/97 ➧	97023-4A000+	**77610**	210 165 42	P/C
H-200 (97-) 2.4 i	G	G4CS	A	+/-		10/97 ➧	97023-4A000+	**77610**	210 165 42	P/C
H-200 (97-) 2.5 TD	D	D4BF	M	+/-		10/97 ➧	97023-4A000+	**77610**	210 165 42	P/C
H-200 (97-) 2.5 TD	D	D4BF	A	+/-		10/97 ➧	97023-4A000+	**77610**	210 165 42	P/C
H-200 (97-) 2.6 D	D		M	+/-		10/97 ➧	97023-4A000+	**77610**	210 165 42	P/C
H-200 (97-) 2.6 D	D		A	+/-		10/97 ➧	97023-4A000+	**77610**	210 165 42	P/C
H1 (97-) 2.4 i	G	G4CS	M	+/-		10/97 ➧	97023-4A000+	**77610**	210 165 42	P/C
H1 (97-) 2.4 i	G	G4CS	A	+/-		10/97 ➧	97023-4A000+	**77610**	210 165 42	P/C
H1 (97-) 2.5 TD	D	D4BF	M	+/-		10/97 ➧	97023-4A000+	**77610**	210 165 42	P/C
H1 (97-) 2.5 TD	D	D4BF	A	+/-		10/97 ➧	97023-4A000+	**77610**	210 165 42	P/C
H1 (97-) 2.5 TDi	D	D4BH	M	+/-	With IC	10/97 ➧	97023-4A000+	**77610**	210 165 42	P/C
H1 (97-) 2.5 TDi	D	D4BH	A	+/-	With IC	10/97 ➧	97023-4A000+	**77610**	210 165 42	P/C
H1 (97-) 2.6 D	D		M	+/-		10/97 ➧	97023-4A000+	**77610**	210 165 42	P/C
H1 (97-) 2.6 D	D		A	+/-		10/97 ➧	97023-4A000+	**77610**	210 165 42	P/C

HEATERS

	G/D			AC	Note		OE	Nissens	Dim. H	W	T	Mat.
HYUNDAI LIGHT VAN (../..)												
STAREX (93-) 2.4 i	G	G4CS	M	+/-		07/93 ➧	97023-4A000+	**77610**	210	165	42	P/C
STAREX (93-) 2.4 i	G	G4CS	M	+/-		07/93 ➧	97123-4A000	**77618**	210	165	26	P/C
STAREX (93-) 2.4 i	G	G4CS	M	+/-		07/93 ➧	97023-4A000+	**77610**	210	165	42	P/C
STAREX (93-) 2.5 TD	D	D4BF	M	+/-		07/93 ➧	97023-4A000+	**77610**	210	165	42	P/C
STAREX (93-) 2.5 TD	D	D4BF	M	+/-		07/93 ➧	97023-4A000+	**77610**	210	165	42	P/C
KIA LIGHT VAN												
K-SERIE (01-) 2.5 TCI	D	D4BH	M	+/-		03/01 ➧	OK60A-61010	**77526**	170	166	22	P/C
K-SERIE (01-) 2.5 TCI	D	D4BH	M	+/-		03/01 ➧	OK60A-61010	**77526**	170	166	22	P/C
K-SERIE (01-) 2.7 D	D	NA	M	+/-		03/01 ➧	OK60A-61010	**77526**	170	166	22	P/C
K-SERIE (01-) 2.7 D	D	NA	A	+/-		03/01 ➧	OK60A-61010	**77526**	170	166	22	P/C
K-SERIE (04-) 2.5 TCI	D	D4BH	M	+/-		07/04 ➧	97318-4F000	**77530**	0	0	0	A/A
K-SERIE (04-) 2.7 D	D	NA	M	+/-		07/04 ➧	97318-4F000	**77530**	0	0	0	A/A
MAZDA LIGHT VAN												
B 2500 (96-) 2.5 D	D	MD25NA	M	+/-		02/96 ➧	ZZM061A10	**71766**	195	147	42	P/A
B 2500 (96-) 2.5 D	D	WL	M	+/-		02/96 ➧	ZZM061A10	**71766**	195	147	42	P/A
B 2500 (96-) 2.5 TD	D	MD25TI	M	+/-		02/96 ➧	ZZM061A10	**71766**	195	147	42	P/A
B 2500 (96-) 2.5 TD	D	WLT	M	+/-		02/96 ➧	ZZM061A10	**71766**	195	147	42	P/A
TRIBUTE (02-) 2.0 i 16V	G		M/A	+/-		09/02 ➧	EC-0161-A08	**71767**	153	196	52	P/A
TRIBUTE (02-) 2.3 i 16V	G		M/A	+/-		09/02 ➧	EC-0161-A08	**71767**	153	196	52	P/A
TRIBUTE (02-) 3.0 i V6 24V	G		M/A	+/-		09/02 ➧	EC-0161-A08	**71767**	153	196	52	P/A
MERCEDES LIGHT VAN												
207 D (77-) 2.4 DIESEL	D	OM616917	M	-		04/77 ➧ 12/82	001 835 76 04+	**72004**	267	153	42	P/A
207 D (77-) 2.4 DIESEL	D	OM616937/939	M	-	HD	01/86 ➧ 12/88	001 835 76 04+	**72004**	267	153	42	P/A
207 D (77-) 2.4 DIESEL	D	OM616937/939	M	-		01/86 ➧ 12/88	001 835 76 04+	**72004**	267	153	42	P/A
207 D (77-) 2.4 DIESEL	D	OM616937/939	M	-		08/82 ➧ 12/85	001 835 76 04+	**72004**	267	153	42	P/A
207 D (77-) 2.4 DIESEL	D	OM616937/939	A	-		01/86 ➧ 12/88	001 835 76 04+	**72004**	267	153	42	P/A
209 D (76-) 3.0 DIESEL	D	OM617913	M	-		01/83 ➧ 12/85	001 835 76 04+	**72004**	267	153	42	P/A
209 D (76-) 3.0 DIESEL	D	OM617913	M	-		01/86 ➧ 12/88	001 835 76 04+	**72004**	267	153	42	P/A
209 D (76-) 3.0 DIESEL	D	OM617913	M	-	HD	01/86 ➧ 12/88	001 835 76 04+	**72004**	267	153	42	P/A
209 D (76-) 3.0 DIESEL	D	OM617913	A	-		01/86 ➧ 12/88	001 835 76 04+	**72004**	267	153	42	P/A
307 D (77-) 2.4 DIESEL	D	OM616934	M	-		08/77 ➧ 07/82	001 835 76 04+	**72004**	267	153	42	P/A
307 D (77-) 2.4 DIESEL	D	OM616937/939	M	-	HD	01/86 ➧ 12/88	001 835 76 04+	**72004**	267	153	42	P/A
307 D (77-) 2.4 DIESEL	D	OM616937/939	M	-		01/86 ➧ 12/88	001 835 76 04+	**72004**	267	153	42	P/A
307 D (77-) 2.4 DIESEL	D	OM616937/939	M	-		08/82 ➧ 12/85	001 835 76 04+	**72004**	267	153	42	P/A
307 D (77-) 2.4 DIESEL	D	OM616937/939	A	-		01/86 ➧ 12/88	001 835 76 04+	**72004**	267	153	42	P/A
309 D (68-) 3.0 DIESEL	D	OM 617	M	-	HD	01/86 ➧ 12/88	001 835 76 04+	**72004**	267	153	42	P/A
309 D (68-) 3.0 DIESEL	D	OM 617	M	-		01/86 ➧ 12/88	001 835 76 04+	**72004**	267	153	42	P/A
309 D (68-) 3.0 DIESEL	D	OM 617	M	-		08/82 ➧ 12/85	001 835 76 04+	**72004**	267	153	42	P/A
309 D (68-) 3.0 DIESEL	D	OM 617	A	-		01/86 ➧ 12/88	001 835 76 04+	**72004**	267	153	42	P/A
407 D (81-) 2.4 DIESEL	D	OM 616	M	-		01/86 ➧ 09/89	001 835 76 04+	**72004**	267	153	42	P/A
407 D (81-) 2.4 DIESEL	D	OM 616	M	-	HD	01/86 ➧ 09/89	001 835 76 04+	**72004**	267	153	42	P/A
407 D (81-) 2.4 DIESEL	D	OM 616	M	-		06/81 ➧ 12/85	001 835 76 04+	**72004**	267	153	42	P/A
407 D (81-) 2.4 DIESEL	D	OM 616	A	-		01/86 ➧ 09/89	001 835 76 04+	**72004**	267	153	42	P/A
407 D (81-) 3.0 DIESEL	D	OM 617	M	-	HD	01/86 ➧ 09/89	001 835 76 04+	**72004**	267	153	42	P/A
407 D (81-) 3.0 DIESEL	D	OM 617	M	-		01/86 ➧ 09/89	001 835 76 04+	**72004**	267	153	42	P/A
407 D (81-) 3.0 DIESEL	D	OM 617	M	-		06/81 ➧ 12/85	001 835 76 04+	**72004**	267	153	42	P/A

HEATERS

	G/D			AC	Note		OE	Nissens	Dim. H W T	Mat.
MERCEDES LIGHT VAN (../..)										
407 D (81-) 3.0 DIESEL	D	OM 617	A	-		01/86 ➧ 09/89	001 835 76 04+	**72004**	267 153 42	P/A
409 D (77-) 2.4 DIESEL	D	OM 616	M	-		01/86 ➧ 09/89	001 835 76 04+	**72004**	267 153 42	P/A
409 D (77-) 2.4 DIESEL	D	OM 616	M	-	HD	01/86 ➧ 09/89	001 835 76 04+	**72004**	267 153 42	P/A
409 D (77-) 2.4 DIESEL	D	OM 616	M	-		06/81 ➧ 12/86	001 835 76 04+	**72004**	267 153 42	P/A
409 D (77-) 2.4 DIESEL	D	OM 616	A	-		01/86 ➧ 09/89	001 835 76 04+	**72004**	267 153 42	P/A
409 D (77-) 3.0 DIESEL	D	OM 617	M	-		01/86 ➧ 09/89	001 835 76 04+	**72004**	267 153 42	P/A
409 D (77-) 3.0 DIESEL	D	OM 617	M	-	HD	01/86 ➧ 09/89	001 835 76 04+	**72004**	267 153 42	P/A
409 D (77-) 3.0 DIESEL	D	OM 617	M	-		06/81 ➧ 12/85	001 835 76 04+	**72004**	267 153 42	P/A
409 D (77-) 3.0 DIESEL	D	OM 617	A	-		01/86 ➧ 09/89	001 835 76 04+	**72004**	267 153 42	P/A
MB 100 D (88-) 2.4 DIESEL	D	OM 616	M			09/87 ➧	002 835 48 01	**72011**	361 152 42	P/A
SPRINTER (95-) 208 CDI	D	OM611.987	M	+/-		04/00 ➧	003 835 35 01	**72038**	170 152 42	P/A
SPRINTER (95-) 208 CDI	D	OM611.987	A	+/-		04/00 ➧	003 835 35 01	**72038**	170 152 42	P/A
SPRINTER (95-) 208 D	D	OM 601	M	-		01/95 ➧ 04/00	003 835 35 01	**72038**	170 152 42	P/A
SPRINTER (95-) 208 D	D	OM 601	M	+		01/95 ➧ 04/00	003 835 35 01	**72038**	170 152 42	P/A
SPRINTER (95-) 208 D	D	OM 601	M	+		01/95 ➧ 04/00	003 835 35 01	**72038**	170 152 42	P/A
SPRINTER (95-) 208 D	D	OM 601	A	+		01/95 ➧ 04/00	003 835 35 01	**72038**	170 152 42	P/A
SPRINTER (95-) 210 D	D	OM 601	M	-		02/95 ➧ 04/00	003 835 35 01	**72038**	170 152 42	P/A
SPRINTER (95-) 210 D	D	OM 601	M	+		02/95 ➧ 04/00	003 835 35 01	**72038**	170 152 42	P/A
SPRINTER (95-) 210 D	D	OM 602	M	+		02/95 ➧ 04/00	003 835 35 01	**72038**	170 152 42	P/A
SPRINTER (95-) 210 D	D	OM 602	A	+		02/95 ➧ 04/00	003 835 35 01	**72038**	170 152 42	P/A
SPRINTER (95-) 211 CDI	D	OM611.981/987	M	+/-		04/00 ➧	003 835 35 01	**72038**	170 152 42	P/A
SPRINTER (95-) 211 CDI	D	OM611.981/987	A	+/-		04/00 ➧	003 835 35 01	**72038**	170 152 42	P/A
SPRINTER (95-) 212 D	D	OM 601	M	-		02/95 ➧ 04/00	003 835 35 01	**72038**	170 152 42	P/A
SPRINTER (95-) 212 D	D	OM 601	M	+		02/95 ➧ 04/00	003 835 35 01	**72038**	170 152 42	P/A
SPRINTER (95-) 212 D	D	OM 602	M	+		02/95 ➧ 04/00	003 835 35 01	**72038**	170 152 42	P/A
SPRINTER (95-) 212 D	D	OM 602	A	+		02/95 ➧ 04/00	003 835 35 01	**72038**	170 152 42	P/A
SPRINTER (95-) 213 CDI	D	OM611.981/987	M	+/-		04/00 ➧	003 835 35 01	**72038**	170 152 42	P/A
SPRINTER (95-) 213 CDI	D	OM611.981/987	A	+/-		04/00 ➧	003 835 35 01	**72038**	170 152 42	P/A
SPRINTER (95-) 214	G	M 111	M	-		02/95 ➧	003 835 35 01	**72038**	170 152 42	P/A
SPRINTER (95-) 214	G	M 111	M	+		02/95 ➧	003 835 35 01	**72038**	170 152 42	P/A
SPRINTER (95-) 214	G	M 111	A	+		02/95 ➧	003 835 35 01	**72038**	170 152 42	P/A
SPRINTER (95-) 216 CDI	D	OM612.981	M	+/-		04/00 ➧	003 835 35 01	**72038**	170 152 42	P/A
SPRINTER (95-) 216 CDI	D	OM612.981	A	+/-		04/00 ➧	003 835 35 01	**72038**	170 152 42	P/A
SPRINTER (95-) 308 CDI	D	OM611.987	M	+/-		04/00 ➧	003 835 35 01	**72038**	170 152 42	P/A
SPRINTER (95-) 308 CDI	D	OM611.987	A	+/-		04/00 ➧	003 835 35 01	**72038**	170 152 42	P/A
SPRINTER (95-) 308 D	D	OM 601	M	-		02/95 ➧ 04/00	003 835 35 01	**72038**	170 152 42	P/A
SPRINTER (95-) 308 D	D	OM 601	M	+		02/95 ➧ 04/00	003 835 35 01	**72038**	170 152 42	P/A
SPRINTER (95-) 308 D	D	OM 601	A	+		02/95 ➧ 04/00	003 835 35 01	**72038**	170 152 42	P/A
SPRINTER (95-) 310 D	D	OM 601	M	-		02/95 ➧ 04/00	003 835 35 01	**72038**	170 152 42	P/A
SPRINTER (95-) 310 D	D	OM 602	M	+		02/95 ➧ 04/00	003 835 35 01	**72038**	170 152 42	P/A
SPRINTER (95-) 310 D	D	OM 602	M	+		02/95 ➧ 04/00	003 835 35 01	**72038**	170 152 42	P/A
SPRINTER (95-) 310 D	D	OM 602	A	+		02/95 ➧ 04/00	003 835 35 01	**72038**	170 152 42	P/A
SPRINTER (95-) 311 CDI	D	OM611.981/987	M	+/-		04/00 ➧	003 835 35 01	**72038**	170 152 42	P/A
SPRINTER (95-) 311 CDI	D	OM611.981/987	A	+/-		04/00 ➧	003 835 35 01	**72038**	170 152 42	P/A
SPRINTER (95-) 312 D	D	OM 601	M	-		02/95 ➧ 04/00	003 835 35 01	**72038**	170 152 42	P/A
SPRINTER (95-) 312 D	D	OM 602	M	+		02/95 ➧ 04/00	003 835 35 01	**72038**	170 152 42	P/A
SPRINTER (95-) 312 D	D	OM 602	M	+		02/95 ➧ 04/00	003 835 35 01	**72038**	170 152 42	P/A
SPRINTER (95-) 312 D	D	OM 602	A	+		02/95 ➧ 04/00	003 835 35 01	**72038**	170 152 42	P/A
SPRINTER (95-) 313 CDI	D	OM611.981/987	M	+/-		04/00 ➧	003 835 35 01	**72038**	170 152 42	P/A
SPRINTER (95-) 313 CDI	D	OM611.981/987	A	+/-		04/00 ➧	003 835 35 01	**72038**	170 152 42	P/A

HEATERS

	G/D			AC	Note		OE	Nissens	Dim. H	W	T	Mat.
MERCEDES LIGHT VAN (../..)												
SPRINTER (95-) 314	G	M 111	M	-		02/95 ➧ 04/00	003 835 35 01	**72038**	170	152	42	P/A
SPRINTER (95-) 314	G	M 111	M	+		02/95 ➧ 04/00	003 835 35 01	**72038**	170	152	42	P/A
SPRINTER (95-) 314	G	M 111	A	+		02/95 ➧ 04/00	003 835 35 01	**72038**	170	152	42	P/A
SPRINTER (95-) 316 CDI	D	OM612.981	M	+/-		04/00 ➧	003 835 35 01	**72038**	170	152	42	P/A
SPRINTER (95-) 316 CDI	D	OM612.981	A	+/-		04/00 ➧	003 835 35 01	**72038**	170	152	42	P/A
SPRINTER (95-) 408 CDI	D	OM611.987	M	+/-		04/00 ➧	003 835 35 01	**72038**	170	152	42	P/A
SPRINTER (95-) 408 CDI	D	OM611.987	A	+/-		04/00 ➧	003 835 35 01	**72038**	170	152	42	P/A
SPRINTER (95-) 408 D	D	OM 601	M	-		02/95 ➧ 04/00	003 835 35 01	**72038**	170	152	42	P/A
SPRINTER (95-) 408 D	D	OM 601	M	+		02/96 ➧	003 835 35 01	**72038**	170	152	42	P/A
SPRINTER (95-) 408 D	D	OM 601	M	+		02/96 ➧	003 835 35 01	**72038**	170	152	42	P/A
SPRINTER (95-) 408 D	D	OM 601	A	+/-		02/96 ➧	003 835 35 01	**72038**	170	152	42	P/A
SPRINTER (95-) 410 D	D	OM 601	M	-		02/95 ➧ 04/00	003 835 35 01	**72038**	170	152	42	P/A
SPRINTER (95-) 410 D	D	OM602.980	M	+		02/96 ➧	003 835 35 01	**72038**	170	152	42	P/A
SPRINTER (95-) 410 D	D	OM602.980	M	+		02/96 ➧	003 835 35 01	**72038**	170	152	42	P/A
SPRINTER (95-) 410 D	D	OM602.980	A	+		02/96 ➧	003 835 35 01	**72038**	170	152	42	P/A
SPRINTER (95-) 411 CDI	D	OM611.981/987	M	+/-		04/00 ➧	003 835 35 01	**72038**	170	152	42	P/A
SPRINTER (95-) 411 CDI	D	OM611.981/987	A	+/-		04/00 ➧	003 835 35 01	**72038**	170	152	42	P/A
SPRINTER (95-) 412 D	D	OM602.980	M	+		02/96 ➧	003 835 35 01	**72038**	170	152	42	P/A
SPRINTER (95-) 412 D	D	OM602.980	M	+		02/96 ➧	003 835 35 01	**72038**	170	152	42	P/A
SPRINTER (95-) 412 D	D	OM602.980	A	+		02/96 ➧	003 835 35 01	**72038**	170	152	42	P/A
SPRINTER (95-) 413 CDI	D	OM612.981	M	+/-		04/00 ➧	003 835 35 01	**72038**	170	152	42	P/A
SPRINTER (95-) 413 CDI	D	OM612.981	A	+/-		04/00 ➧	003 835 35 01	**72038**	170	152	42	P/A
SPRINTER (95-) 414	G	M111.979	M	-		02/96 ➧	003 835 35 01	**72038**	170	152	42	P/A
SPRINTER (95-) 414	G	M111.979	M	+		02/96 ➧	003 835 35 01	**72038**	170	152	42	P/A
SPRINTER (95-) 414	G	M111.979	A	+		02/96 ➧	003 835 35 01	**72038**	170	152	42	P/A
SPRINTER (95-) 416 CDI	D	OM612.981	M	+/-		04/00 ➧	003 835 35 01	**72038**	170	152	42	P/A
SPRINTER (95-) 416 CDI	D	OM612.981	A	+/-		04/00 ➧	003 835 35 01	**72038**	170	152	42	P/A
SPRINTER (95-) 616 CDI	D	OM612.981	M	+/-		04/00 ➧	003 835 35 01	**72038**	170	152	42	P/A
SPRINTER (95-) 616 CDI	D	OM612.981	A	+/-		04/00 ➧	003 835 35 01	**72038**	170	152	42	P/A
VIANO W 639 (03-) 2.0 CDI	D	OM646	M	+/-		09/03 ➧	003 835 75 01	**72037**	360	170	42	P/A
VIANO W 639 (03-) 2.2 CDI	D	OM646	M	+/-		09/03 ➧	003 835 75 01	**72037**	360	170	42	P/A
VIANO W 639 (03-) 3.2 i V6	G	M112	M	+/-		09/03 ➧	003 835 75 01	**72037**	360	170	42	P/A
VIANO W 639 (03-) 3.5 i V6	G	M112	M	+/-		09/03 ➧	003 835 75 01	**72037**	360	170	42	P/A
VITO W 638 (96-) 108 CDI	D	OM611.940	M	-		03/99 ➧	003 835 00 01	**72036**	0	0	0	P/A
VITO W 638 (96-) 108 CDI	D	OM611.940	M	-		03/99 ➧	003 835 00 01	**72036**	0	0	0	P/A
VITO W 638 (96-) 108 CDI	D	OM611.940	M	+		03/99 ➧	003 835 00 01	**72036**	0	0	0	P/A
VITO W 638 (96-) 108 CDI	D	OM611.940	A	+		03/99 ➧	003 835 00 01	**72036**	0	0	0	P/A
VITO W 638 (96-) 108 D	D	OM601.942	M/A	-		02/96 ➧ 03/99	003 835 00 01	**72036**	0	0	0	P/A
VITO W 638 (96-) 108 D	D	OM601.942	M/A	+		02/96 ➧ 03/99	003 835 00 01	**72036**	0	0	0	P/A
VITO W 638 (96-) 108 D	D	OM601.942	M	-		02/96 ➧ 03/99	003 835 00 01	**72036**	0	0	0	P/A
VITO W 638 (96-) 110 CDI	D	OM611.980	M	-		03/99 ➧	003 835 00 01	**72036**	0	0	0	P/A
VITO W 638 (96-) 110 CDI	D	OM611.980	M	-		03/99 ➧	003 835 00 01	**72036**	0	0	0	P/A
VITO W 638 (96-) 110 CDI	D	OM611.980	M	+		03/99 ➧	003 835 00 01	**72036**	0	0	0	P/A
VITO W 638 (96-) 110 CDI	D	OM611.980	A	+		03/99 ➧	003 835 00 01	**72036**	0	0	0	P/A
VITO W 638 (96-) 110 TD	D	OM601.970	M/A	-		02/96 ➧ 03/99	003 835 00 01	**72036**	0	0	0	P/A
VITO W 638 (96-) 110 TD	D	OM601.970	M/A	+		02/96 ➧ 03/99	003 835 00 01	**72036**	0	0	0	P/A
VITO W 638 (96-) 110 TD	D	OM601.970	M	-		02/96 ➧ 03/99	003 835 00 01	**72036**	0	0	0	P/A
VITO W 638 (96-) 112 CDI	D	OM611.960	M	-		03/99 ➧	003 835 00 01	**72036**	0	0	0	P/A
VITO W 638 (96-) 112 CDI	D	OM611.960	M	-		03/99 ➧	003 835 00 01	**72036**	0	0	0	P/A
VITO W 638 (96-) 112 CDI	D	OM611.960	M	+		03/99 ➧	003 835 00 01	**72036**	0	0	0	P/A
VITO W 638 (96-) 112 CDI	D	OM611.960	A	+		03/99 ➧	003 835 00 01	**72036**	0	0	0	P/A

HEATERS

	G/D			AC	Note		OE	Nissens	Dim. H	Dim. W	Dim. T	Mat.
MERCEDES LIGHT VAN (../..)												
VITO W 638 (96-) 113	G	M111.948	M/A	-		02/96 ➧ 03/99	003 835 00 01	**72036**	0	0	0	P/A
VITO W 638 (96-) 113	G	M111.948	M/A	+		02/96 ➧ 03/99	003 835 00 01	**72036**	0	0	0	P/A
VITO W 638 (96-) 113	G	M111.948	M	-		02/96 ➧ 03/99	003 835 00 01	**72036**	0	0	0	P/A
VITO W 638 (96-) 113	G	M111.948	M	-		03/99 ➧ 07/03	003 835 00 01	**72036**	0	0	0	P/A
VITO W 638 (96-) 113	G	M111.948	M	+		03/99 ➧ 07/03	003 835 00 01	**72036**	0	0	0	P/A
VITO W 638 (96-) 113	G	M111.948	A	+/-		03/99 ➧ 07/03	003 835 00 01	**72036**	0	0	0	P/A
VITO W 638 (96-) 114	G	M111.978	M/A	-		02/96 ➧ 03/99	003 835 00 01	**72036**	0	0	0	P/A
VITO W 638 (96-) 114	G	M111.978	M/A	+		02/96 ➧ 03/99	003 835 00 01	**72036**	0	0	0	P/A
VITO W 638 (96-) 114	G	M111.978	M	-		02/96 ➧ 03/99	003 835 00 01	**72036**	0	0	0	P/A
VITO W 638 (96-) 114	G	M111.978	M	-		03/99 ➧ 07/03	003 835 00 01	**72036**	0	0	0	P/A
VITO W 638 (96-) 114	G	M111.978	M	+		03/99 ➧ 07/03	003 835 00 01	**72036**	0	0	0	P/A
VITO W 638 (96-) 114	G	M111.978	A	+/-		03/99 ➧ 07/03	003 835 00 01	**72036**	0	0	0	P/A
VITO W 639 (03-) 2.0 CDI	D	OM646	M	+/-		09/03 ➧	003 835 75 01	**72037**	360	170	42	P/A
VITO W 639 (03-) 2.2 CDI	D	OM646	M	+/-		09/03 ➧	003 835 75 01	**72037**	360	170	42	P/A
VITO W 639 (03-) 3.2 i V6	G	M112	M	+/-		09/03 ➧	003 835 75 01	**72037**	360	170	42	P/A
NISSAN LIGHT VAN												
INTERSTAR (02-) 1.9 dCi	D	F9Q	M	-		02/02 ➧ 11/03		**73375**	330	157	42	P/A
INTERSTAR (02-) 1.9 dCi	D	F9Q	M	-		11/03 ➧		**73375**	330	157	42	P/A
INTERSTAR (02-) 1.9 dCi	D	F9Q	M	+		01/03 ➧ 11/03		**73375**	330	157	42	P/A
INTERSTAR (02-) 1.9 dCi	D	F9Q	M	+		02/02 ➧ 01/03		**73375**	330	157	42	P/A
INTERSTAR (02-) 1.9 dCi	D	F9Q	M	+		11/03 ➧	77 01 207 992+	**72207**	235	145	42	P/A
INTERSTAR (02-) 1.9 dCi	D	F9Q	M	+		11/03 ➧	77 01 207 993	**72665**	215	202	12	P/A
INTERSTAR (02-) 2.2 dCi	D	G9T	M	-		02/02 ➧ 11/03		**73375**	330	157	42	P/A
INTERSTAR (02-) 2.2 dCi	D	G9T	M	-		11/03 ➧		**73375**	330	157	42	P/A
INTERSTAR (02-) 2.2 dCi	D	G9T	M	+		01/03 ➧ 11/03		**73375**	330	157	42	P/A
INTERSTAR (02-) 2.2 dCi	D	G9T	M	+		02/02 ➧ 01/03		**73375**	330	157	42	P/A
INTERSTAR (02-) 2.2 dCi	D	G9T	M	+		11/03 ➧	77 01 207 992+	**72207**	235	145	42	P/A
INTERSTAR (02-) 2.5 dCi	D	G9U	M	-		02/02 ➧ 11/03		**73375**	330	157	42	P/A
INTERSTAR (02-) 2.5 dCi	D	G9U	M	-		11/03 ➧		**73375**	330	157	42	P/A
INTERSTAR (02-) 2.5 dCi	D	G9U	M	+		01/03 ➧ 11/03		**73375**	330	157	42	P/A
INTERSTAR (02-) 2.5 dCi	D	G9U	M	+		02/02 ➧ 01/03		**73375**	330	157	42	P/A
INTERSTAR (02-) 2.5 dCi	D	G9U	M	+		11/03 ➧	77 01 207 992+	**72207**	235	145	42	P/A
INTERSTAR (02-) 3.0 dCi	D	ZD30	M	+/-		07/03 ➧		**73375**	330	157	42	P/A
KUBISTAR (03-) 1.2 i	G	D7F	M	-		08/03 ➧		**72985**	234	152	40	P/A
KUBISTAR (03-) 1.2 i	G	D7F	M	+		08/03 ➧		**72985**	234	152	40	P/A
KUBISTAR (03-) 1.2 i 16V	G	D4F	M	-		08/03 ➧		**72985**	234	152	40	P/A
KUBISTAR (03-) 1.2 i 16V	G	D4F	M	+		08/03 ➧		**72985**	234	152	40	P/A
KUBISTAR (03-) 1.5 dCi	D	K9K	M	-		08/03 ➧		**72985**	234	152	40	P/A
KUBISTAR (03-) 1.5 dCi	D	K9K	M	+		08/03 ➧		**72985**	234	152	40	P/A
KUBISTAR (03-) 1.5 dCi	D	K9K	M	+/-		08/03 ➧		**72985**	234	152	40	P/A
KUBISTAR (03-) 1.6 i 16V	G	K4M	M	-		08/03 ➧		**72985**	234	152	40	P/A
KUBISTAR (03-) 1.6 i 16V	G	K4M	M	+		08/03 ➧		**72985**	234	152	40	P/A
KUBISTAR (03-) 1.9 D	D	F8Q	M	-		08/03 ➧		**72985**	234	152	40	P/A
KUBISTAR (03-) 1.9 D	D	F8Q	M	+		08/03 ➧		**72985**	234	152	40	P/A
KUBISTAR (03-) 1.9 dCi	D	F9Q	M	+/-		08/03 ➧		**72985**	234	152	40	P/A
PATROL Y61 (97-) 2.8 TD	D	RD28TI	M	+		10/97 ➧	27140-61J15	**72200**	139	188	33	M/C
PATROL Y61 (97-) 2.8 TD	D	RD28TI	A	+		10/97 ➧	27140-61J15	**72200**	139	188	33	M/C
PATROL Y61 (97-) 2.8 TD	D	RD28TI	A	+		10/97 ➧	27140-61J15	**72200**	139	188	33	M/C
PATROL Y61 (97-) 3.0 TD	D	ZD30DDTI	M	+		10/97 ➧	27140-61J15	**72200**	139	188	33	M/C

HEATERS

	G/D			AC	Note		OE	Nissens	Dim. H W T	Mat.
NISSAN LIGHT VAN (../..)										
PATROL Y61 (97-) 3.0 TD	D	ZD30DDTI	A	+		10/97 ➧	27140-61J15	**72200**	139 188 33	M/C
PATROL Y61 (97-) 4.8	G	TB48DE	M/A	+		10/97 ➧	27140-61J15	**72200**	139 188 33	M/C
SAFARI Y61 (97-) 2.8 TD	D	RD28TI	M	+		10/97 ➧	27140-61J15	**72200**	139 188 33	M/C
SAFARI Y61 (97-) 2.8 TD	D	RD28TI	A	+		10/97 ➧	27140-61J15	**72200**	139 188 33	M/C
SAFARI Y61 (97-) 3.0 TD	D	ZD30DDTI	M	+		10/97 ➧	27140-61J15	**72200**	139 188 33	M/C
SAFARI Y61 (97-) 3.0 TD	D	ZD30DDTI	A	+		10/97 ➧	27140-61J15	**72200**	139 188 33	M/C
SAFARI Y61 (97-) 4.8	G	TB48DE	M/A	+		10/97 ➧	27140-61J15	**72200**	139 188 33	M/C
TERRANO (93-) 2.4 i 12V	G	KA24E	M	+/-		01/93 ➧	27140-7F001	**72050**	167 148 33	M/C
TERRANO (93-) 2.7 TD	D	TD27T	M	+/-		01/93 ➧	27140-7F001	**72050**	167 148 33	M/C
TERRANO (96-) 2.4 i 12V	G	KA24E	M	+/-		01/96 ➧	27140-7F001	**72050**	167 148 33	M/C
TERRANO (96-) 2.7 TDi	D	TD27TI	M	+/-		05/96 ➧	27140-7F001	**72050**	167 148 33	M/C
TERRANO (96-) 2.7 TDi	D	TD27TI	A	+/-		05/96 ➧	27140-7F001	**72050**	167 148 33	M/C
TERRANO (02-) 2.4 i 12V	G	KA24E	M	+/-		02/02 ➧	27140-7F001	**72050**	167 148 33	M/C
TERRANO (02-) 2.7 TDi	D	TD27TI	M	+/-		02/02 ➧	27140-7F001	**72050**	167 148 33	M/C
TERRANO (02-) 2.7 TDi	D	TD27TI	A	+/-		02/02 ➧	27140-7F001	**72050**	167 148 33	M/C
TERRANO (02-) 3.0 DI	D	ZD30	M	+/-		02/02 ➧	27140-7F001	**72050**	167 148 33	M/C
TERRANO (02-) 3.0 DI	D	ZD30	A	+/-		02/02 ➧	27140-7F001	**72050**	167 148 33	M/C
VANETTE (92-) 1.6 i 16V	G	GA16DE	M	+/-		07/92 ➧ 09/94	27140-9C002	**72050**	167 148 33	M/C
VANETTE (92-) 2.0 D	D	LD20	M	+/-		07/92 ➧	27140-9C002	**72050**	167 148 33	M/C
VANETTE (92-) 2.0 D	D	LD20	M	+/-		07/92 ➧	27140-9C002	**72050**	167 148 33	M/C
VANETTE (92-) 2.0 D	D	LD20	M	+/-		07/92 ➧ 09/94	27140-9C002	**72050**	167 148 33	M/C
VANETTE (92-) 2.0 i 16V	G	SR20DE	M	+/-		07/92 ➧ 09/94	27140-9C002	**72050**	167 148 33	M/C
VANETTE CARGO (95-) 1.6 i 16V	G	G16DE	M	+/-		06/96 ➧	27140-7F001	**72050**	167 148 33	M/C
VANETTE CARGO (95-) 2.0 D	D	LD20	M	+/-		01/95 ➧	27140-7F001	**72050**	167 148 33	M/C
VANETTE CARGO (95-) 2.0 D	D	LD20	M	+/-		01/95 ➧	27140-7F001	**72050**	167 148 33	M/C
VANETTE CARGO (95-) 2.0 i 16V	G	SR20DE	M	+/-		06/96 ➧	27140-7F001	**72050**	167 148 33	M/C
VANETTE CARGO (95-) 2.3 D	D	LD23	M	+/-		01/95 ➧	27140-7F001	**72050**	167 148 33	M/C
VANETTE CARGO (95-) 2.3 D	D	LD23	M	+/-		01/95 ➧	27140-7F001	**72050**	167 148 33	M/C
VANETTE CARGO (95-) 2.3 D	D	LD23	M	+/-		06/96 ➧	27140-7F001	**72050**	167 148 33	M/C
VANETTE CARGO (95-) 2.3 D	D	LD23	M	+/-		09/94 ➧ 06/96	27140-7F001	**72050**	167 148 33	M/C
OPEL LIGHT VAN										
ARENA (98-) 1.9 dCi	D	F9Q	M	-		01/98 ➧ 11/03	4501165	**73375**	330 157 42	P/A
ARENA (98-) 1.9 dCi	D	F9Q	M	-		11/03 ➧	4501165	**73375**	330 157 42	P/A
ARENA (98-) 1.9 dCi	D	F9Q	M	+		01/98 ➧ 06/01	4501165	**73375**	330 157 42	P/A
ARENA (98-) 1.9 dCi	D	F9Q	M	+		01/03 ➧ 11/03	4501165	**73375**	330 157 42	P/A
ARENA (98-) 1.9 dCi	D	F9Q	M	+		06/01 ➧ 01/03	4501165	**73375**	330 157 42	P/A
ARENA (98-) 2.2 dCi	D	G9T	M	-		01/98 ➧ 11/03	4501165	**73375**	330 157 42	P/A
ARENA (98-) 2.2 dCi	D	G9T	M	-		11/03 ➧	4501165	**73375**	330 157 42	P/A
ARENA (98-) 2.2 dCi	D	G9T	M	+		01/98 ➧ 06/01	4501165	**73375**	330 157 42	P/A
ARENA (98-) 2.2 dCi	D	G9T	M	+		01/03 ➧ 11/03	4501165	**73375**	330 157 42	P/A
ARENA (98-) 2.2 dCi	D	G9T	M	+		06/01 ➧ 01/03	4501165	**73375**	330 157 42	P/A
ARENA (98-) 2.2 dTi	D	G9T	M	-		01/98 ➧ 11/03	4501165	**73375**	330 157 42	P/A
ARENA (98-) 2.2 dTi	D	G9T	M	+		01/98 ➧ 06/01	4501165	**73375**	330 157 42	P/A
ARENA (98-) 2.2 dTi	D	G9T	M	+		01/03 ➧ 11/03	4501165	**73375**	330 157 42	P/A
ARENA (98-) 2.2 dTi	D	G9T	M	+		06/01 ➧ 01/03	4501165	**73375**	330 157 42	P/A
ARENA (98-) 2.5 D	D	S8U	M	-		10/98 ➧	4501165	**73375**	330 157 42	P/A
ARENA (98-) 2.5 dCi	D	G9U	M	-		01/98 ➧ 11/03	4501165	**73375**	330 157 42	P/A
ARENA (98-) 2.5 dCi	D	G9U	M	-		11/03 ➧	4501165	**73375**	330 157 42	P/A

HEATERS

	G/D			AC	Note		OE		Nissens	Dim. H	W	T	Mat.
OPEL LIGHT VAN (../..)													
ARENA (98-) 2.5 dCi	D	G9U	M	+		01/98 ➧ 06/01	4501165		**73375**	330	157	42	P/A
ARENA (98-) 2.5 dCi	D	G9U	M	+		01/03 ➧ 11/03	4501165		**73375**	330	157	42	P/A
ARENA (98-) 2.5 dCi	D	G9U	M	+		06/01 ➧ 01/03	4501165		**73375**	330	157	42	P/A
ARENA (98-) 2.8 dTi	D	S9W	M	-		10/98 ➧	4501165		**73375**	330	157	42	P/A
ARENA (98-) 2.8 dTi	D	S9W	M	+		01/03 ➧	4501165		**73375**	330	157	42	P/A
ARENA (98-) 2.8 dTi	D	S9W	M	+		10/98 ➧ 01/03	4501165		**73375**	330	157	42	P/A
COMBO (93-) 1.2 i	G	C12NZ	M	-		03/93 ➧ 09/00	1618 020		**72634**	135	190	35	M/C
COMBO (93-) 1.2 i	G	C12NZ	M	+		03/93 ➧ 09/00	1618 020		**72634**	135	190	35	M/C
COMBO (93-) 1.2 i	G	X12SZ	M	-		03/93 ➧ 09/00	1618 020		**72634**	135	190	35	M/C
COMBO (93-) 1.2 i	G	X12SZ	M	+		03/93 ➧ 09/00	1618 020		**72634**	135	190	35	M/C
COMBO (93-) 1.4 i	G	C14NZ	M	-		03/93 ➧ 09/00	1618 020		**72634**	135	190	35	M/C
COMBO (93-) 1.4 i	G	C14NZ	M	+		03/93 ➧ 09/00	1618 020		**72634**	135	190	35	M/C
COMBO (93-) 1.4 i	G	X14SZ	M	-		03/93 ➧ 09/00	1618 020		**72634**	135	190	35	M/C
COMBO (93-) 1.4 i	G	X14SZ	M	+		03/93 ➧ 09/00	1618 020		**72634**	135	190	35	M/C
COMBO (93-) 1.4 i 16V	G	X14XE	M	-		03/93 ➧ 09/00	1618 020		**72634**	135	190	35	M/C
COMBO (93-) 1.4 i 16V	G	X14XE	M	+		03/93 ➧ 09/00	1618 020		**72634**	135	190	35	M/C
COMBO (93-) 1.7 D	D	17D	M	+/-		03/96 ➧ 09/00	1618 020		**72634**	135	190	35	M/C
COMBO (93-) 1.7 D	D	X17D	M	+/-		03/96 ➧ 09/00	1618 020		**72634**	135	190	35	M/C
COMBO (00-) 1.2 i 16V	G	Z12XE	M	+/-		09/00 ➧	1618 222		**72661**	172	169	36	P/A
COMBO (00-) 1.3 DTi	D	Y13DT	M	-		10/04 ➧	1618 222		**72661**	172	169	36	P/A
COMBO (00-) 1.3 DTi	D	Y13DT	M	+		10/04 ➧	1618 222		**72661**	172	169	36	P/A
COMBO (00-) 1.3 DTi	D	Z13DT	M	-		10/04 ➧	1618 222		**72661**	172	169	36	P/A
COMBO (00-) 1.3 DTi	D	Z13DT	M	+		10/04 ➧	1618 222		**72661**	172	169	36	P/A
COMBO (00-) 1.4 i 16V	G	Z14XE	M	+/-		09/00 ➧	1618 222		**72661**	172	169	36	P/A
COMBO (00-) 1.7 DTi	D	Y17DT	M	+/-		09/00 ➧	1618 222		**72661**	172	169	36	P/A
COMBO (00-) 1.7 DTi	D	Y17DTL	M	+/-		09/00 ➧	1618 222		**72661**	172	169	36	P/A
COMBO (00-) 1.7 DTi	D	Z17DTH	M	+/-		09/00 ➧	1618 222		**72661**	172	169	36	P/A
FRONTERA A (92-) 2.0 i	G	C20NE	M	+/-		03/91 ➧ 03/95	1806 125	+	**72659**	150	148	33	M/C
FRONTERA A (92-) 2.0 i	G	X20SE	M	+/-		10/94 ➧ 08/98	1800 067	+	**72999**	0	0	0	M/C
FRONTERA A (92-) 2.2 i 16V	G	X22XE	M	+/-		10/94 ➧ 08/98	1800 067	+	**72999**	0	0	0	M/C
FRONTERA A (92-) 2.3 TD	D	23DTR	M	+/-		03/91 ➧ 09/94	1806 125	+	**72659**	150	148	33	M/C
FRONTERA A (92-) 2.4 i	G	C24NE	M	+/-		02/92 ➧ 09/94	1806 125	+	**72659**	150	148	33	M/C
FRONTERA A (92-) 2.8 TD	D	28TD	M	+/-		10/94 ➧ 09/98	1806 125	+	**72659**	150	148	33	M/C
FRONTERA B (98-) 2.2 i 16V	G	X22SE	M	+/-		06/99 ➧	1806 105		**72664**	150	190	33	P/A
FRONTERA B (98-) 2.2 i 16V	G	Y22SE	M	+/-		06/99 ➧	1806 105		**72664**	150	190	33	P/A
FRONTERA B (98-) 2.2 TD	D	X22DTH	M/A	+/-		06/99 ➧	1806 105		**72664**	150	190	33	P/A
FRONTERA B (98-) 2.2 TD	D	Y22DTH	M/A	+/-		06/99 ➧	1806 105		**72664**	150	190	33	P/A
MOVANO (98-) 1.9 dCi	D	F9Q	M	-		01/98 ➧ 11/03	4501165		**73375**	330	157	42	P/A
MOVANO (98-) 1.9 dCi	D	F9Q	M	-		11/03 ➧	4501165		**73375**	330	157	42	P/A
MOVANO (98-) 1.9 dCi	D	F9Q	M	+		01/98 ➧ 06/01	4501165		**73375**	330	157	42	P/A
MOVANO (98-) 1.9 dCi	D	F9Q	M	+		01/03 ➧ 11/03	4501165		**73375**	330	157	42	P/A
MOVANO (98-) 1.9 dCi	D	F9Q	M	+		06/01 ➧ 01/03	4501165		**73375**	330	157	42	P/A
MOVANO (98-) 1.9 dCi	D	F9Q	M	+		11/03 ➧	4415542	+	**72207**	235	145	42	P/A
MOVANO (98-) 1.9 dCi	D	F9Q	M	+		11/03 ➧	4415545		**72665**	215	202	12	P/A
MOVANO (98-) 2.2 dCi	D	G9T	M	-		01/98 ➧ 11/03	4501165		**73375**	330	157	42	P/A
MOVANO (98-) 2.2 dCi	D	G9T	M	-		11/03 ➧	4501165		**73375**	330	157	42	P/A
MOVANO (98-) 2.2 dCi	D	G9T	M	+		01/98 ➧ 06/01	4501165		**73375**	330	157	42	P/A
MOVANO (98-) 2.2 dCi	D	G9T	M	+		01/03 ➧ 11/03	4501165		**73375**	330	157	42	P/A
MOVANO (98-) 2.2 dCi	D	G9T	M	+		06/01 ➧ 01/03	4501165		**73375**	330	157	42	P/A
MOVANO (98-) 2.2 dCi	D	G9T	M	+		11/03 ➧	4415542	+	**72207**	235	145	42	P/A

HEATERS

	G/D			AC	Note		OE	Nissens	Dim. H W T	Mat.
OPEL LIGHT VAN (../..)										
MOVANO (98-) 2.2 dTi	D	G9T	M	-		01/98 ➧ 11/03	4501165	**73375**	330 157 42	P/A
MOVANO (98-) 2.2 dTi	D	G9T	M	+		01/98 ➧ 06/01	4501165	**73375**	330 157 42	P/A
MOVANO (98-) 2.2 dTi	D	G9T	M	+		01/03 ➧ 11/03	4501165	**73375**	330 157 42	P/A
MOVANO (98-) 2.2 dTi	D	G9T	M	+		06/01 ➧ 01/03	4501165	**73375**	330 157 42	P/A
MOVANO (98-) 2.5 D	D	S8U	M	-		10/98 ➧	4501165	**73375**	330 157 42	P/A
MOVANO (98-) 2.5 dCi	D	G9U	M	-		01/98 ➧ 11/03	4501165	**73375**	330 157 42	P/A
MOVANO (98-) 2.5 dCi	D	G9U	M	-		11/03 ➧	4501165	**73375**	330 157 42	P/A
MOVANO (98-) 2.5 dCi	D	G9U	M	+		01/98 ➧ 06/01	4501165	**73375**	330 157 42	P/A
MOVANO (98-) 2.5 dCi	D	G9U	M	+		01/03 ➧ 11/03	4501165	**73375**	330 157 42	P/A
MOVANO (98-) 2.5 dCi	D	G9U	M	+		06/01 ➧ 01/03	4501165	**73375**	330 157 42	P/A
MOVANO (98-) 2.5 dCi	D	G9U	M	+		11/03 ➧	4415542 +	**72207**	235 145 42	P/A
MOVANO (98-) 2.8 dTi	D	S9W	M	-		10/98 ➧	4501165	**73375**	330 157 42	P/A
MOVANO (98-) 2.8 dTi	D	S9W	M	+		01/03 ➧	4501165	**73375**	330 157 42	P/A
MOVANO (98-) 2.8 dTi	D	S9W	M	+		10/98 ➧ 01/03	4501165	**73375**	330 157 42	P/A
MOVANO (98-) 3.0 dCi	D	ZD30	M	+/-		01/03 ➧		**73375**	330 157 42	P/A
PEUGEOT LIGHT VAN										
BOXER (94-) 1.9 D	D	XUD9AU	M	+/-		02/94 ➧ 01/02	1307156080 +	**73984**	220 195 42	ALM
BOXER (94-) 1.9 D	D	XUD9AU	M	+/-		02/94 ➧ 01/02	6448.H8 +	**73986**	300 200 32	A/A
BOXER (94-) 1.9 D	D	XUD9AU	M	+/-		02/94 ➧ 01/02	46722710 +	**71443**	260 171 35	M/C
BOXER (94-) 1.9 D	D	XUD9AU	M	+/-		02/94 ➧ 01/02	1321310080	**73987**	220 195 42	ALM
BOXER (94-) 1.9 TD	D	XUD9UTF	M	+/-		02/94 ➧ 01/02	1307156080 +	**73984**	220 195 42	ALM
BOXER (94-) 2.0	G	XU102C	M	+/-	TROPIC	02/94 ➧ 01/02	1307156080 +	**73984**	220 195 42	ALM
BOXER (94-) 2.0	G	XU10J2U	M	+		02/94 ➧ 01/02	1307156080 +	**73984**	220 195 42	ALM
BOXER (94-) 2.5 D	D	DJ5	M	-		02/94 ➧ 01/02	1307156080 +	**73984**	220 195 42	ALM
BOXER (94-) 2.5 D	D	DJ5	M	+		02/94 ➧ 01/02	1307156080 +	**73984**	220 195 42	ALM
BOXER (94-) 2.5 TD	D	DJ5T	M	-		02/94 ➧ 01/02	1307156080 +	**73984**	220 195 42	ALM
BOXER (94-) 2.5 TD	D	DJ5T	M	+		02/94 ➧ 01/02	1307156080 +	**73984**	220 195 42	ALM
BOXER (94-) 2.8 D	D	SOFIM	M	+/-		02/94 ➧ 01/02	1307156080 +	**73984**	220 195 42	ALM
BOXER (94-) 2.8 HDi	D	8140-43	M	+/-		02/94 ➧ 01/02	1307156080 +	**73984**	220 195 42	ALM
BOXER (94-) 2.8 TD	D	8140-43/63	M	+/-		02/94 ➧ 01/02	1307156080 +	**73984**	220 195 42	ALM
BOXER (02-) 2.0 HDi	D	DW10TD	M	-		01/02 ➧	6448.H8	**73986**	300 200 32	A/A
BOXER (02-) 2.0 HDi	D	DW10TD	M	+		01/02 ➧	6448.H8	**73986**	300 200 32	A/A
BOXER (02-) 2.0 i	G	XU10J2	M	+/-		01/02 ➧	6448.H8	**73986**	300 200 32	A/A
BOXER (02-) 2.2 HDi	D	DW12TED	M	-		01/02 ➧	6448.H8	**73986**	300 200 32	A/A
BOXER (02-) 2.2 HDi	D	DW12TED	M	+		01/02 ➧	6448.H8	**73986**	300 200 32	A/A
BOXER (02-) 2.8 HDi	D	8140-43S	M	-		01/02 ➧	6448.H8	**73986**	300 200 32	A/A
BOXER (02-) 2.8 HDi	D	8140-43S	M	+		01/02 ➧	6448.H8	**73986**	300 200 32	A/A
BOXER (02-) 2.8 TD	D	8140-43S	M	-		01/02 ➧	6448.H8	**73986**	300 200 32	A/A
E7 - EUROCAB 2.0 HDi	D	DW10BTED	M	+/-		01/01 ➧	6448.A7	**71149**	303 170 40	P/A
EXPERT (95-) 1.6 i	G	SPI	M	-		10/95 ➧	6448.A7	**71149**	303 170 40	P/A
EXPERT (95-) 1.6 i	G	SPI	M	+		10/95 ➧	6448.A7	**71149**	303 170 40	P/A
EXPERT (95-) 1.8 i	G	XU7JP	M	-		07/96 ➧ 05/99	6448.A7	**71149**	303 170 40	P/A
EXPERT (95-) 1.8 i	G	XU7JP	M	+		07/96 ➧	6448.A7	**71149**	303 170 40	P/A
EXPERT (95-) 1.9 D	D	DW8	M	-		05/98 ➧	6448.A7	**71149**	303 170 40	P/A
EXPERT (95-) 1.9 D	D	DW8	M	+		05/98 ➧	6448.A7	**71149**	303 170 40	P/A
EXPERT (95-) 1.9 D	D	XUD9A	M	-		10/95 ➧	6448.A7	**71149**	303 170 40	P/A
EXPERT (95-) 1.9 D	D	XUD9A	M	+		10/95 ➧	6448.A7	**71149**	303 170 40	P/A
EXPERT (95-) 1.9 TD	D	XUDTE	M	+/-		10/95 ➧	6448.A7	**71149**	303 170 40	P/A
EXPERT (95-) 2.0 HDi	D	DW10ATED	M	+/-		09/00 ➧	6448.A7	**71149**	303 170 40	P/A

HEATERS

	G/D			AC	Note		OE		Nissens	Dim. H	W	T	Mat.
PEUGEOT LIGHT VAN (../..)													
EXPERT (95-) 2.0 i 16V	G	EW10J4	M	-		09/00 ➧	6448.A7		**71149**	303	170	40	P/A
EXPERT (95-) 2.0 i 16V	G	EW10J4	M	+		09/00 ➧	6448.A7		**71149**	303	170	40	P/A
EXPERT (95-) 2.1 TD	D	XUD11ATE	M	+/-		10/95 ➧	6448.A7		**71149**	303	170	40	P/A
J5 (81-) 1.8	G	XM7T	M	-		11/81 ➧	5929122	+	**72980**	227	150	40	P/A
J5 (81-) 1.8	G	XM7T	M	-		11/81 ➧	5947797	+	**71148**	237	180	38	M/C
J5 (81-) 1.8	G	XM7T	M	-		11/81 ➧	6448.62	+	**73988**	243	177	42	ALM
J5 (81-) 1.9 D	D	XUD9A	M	-		11/81 ➧	5929122	+	**72980**	227	150	40	P/A
J5 (81-) 1.9 D	D	XUD9A	M	-		11/81 ➧	6448.60	+	**71144**	232	192	42	P/A
J5 (81-) 1.9 TD	D	M705T	M	-		11/81 ➧	5929122	+	**72980**	227	150	40	P/A
J5 (81-) 2.0	G	XN1T	M	-		11/81 ➧	5929122	+	**72980**	227	150	40	P/A
J5 (81-) 2.5 D	D	CRD93	M	-		11/81 ➧	5929122	+	**72980**	227	150	40	P/A
J5 (81-) 2.5 TD	D	CRD93LS	M	-		11/81 ➧	5929122	+	**72980**	227	150	40	P/A
PARTNER (96-) 1.1 i	G	TU1M	M	-		07/96 ➧ 10/98	6448.78	+	**71156**	234	158	42	ALM
PARTNER (96-) 1.1 i	G	TU1M	M	-		07/96 ➧ 10/98	6448.80		**71147**	234	158	42	ALM
PARTNER (96-) 1.1 i	G	TU1M	M	-		11/98 ➧	6448.78	+	**71156**	234	158	42	ALM
PARTNER (96-) 1.1 i	G	TU1M	M	+		07/96 ➧	6448.78	+	**71156**	234	158	42	ALM
PARTNER (96-) 1.4 i	G	TU3JP	M	+/-		07/96 ➧ 10/98	6448.78	+	**71156**	234	158	42	ALM
PARTNER (96-) 1.4 i	G	TU3JP	M	+/-		11/98 ➧	6448.78	+	**71156**	234	158	42	ALM
PARTNER (96-) 1.6 i	G	TU5JP	M	+/-		07/96 ➧	6448.78	+	**71156**	234	158	42	ALM
PARTNER (96-) 1.6 i 16V	G	TU5JP4	M	+/-		11/98 ➧	6448.78	+	**71156**	234	158	42	ALM
PARTNER (96-) 1.8 D	D	XUD7	M	-		06/96 ➧ 10/98	6448.78	+	**71156**	234	158	42	ALM
PARTNER (96-) 1.8 D	D	XUD7	M	-		11/98 ➧	6448.78	+	**71156**	234	158	42	ALM
PARTNER (96-) 1.8 D	D	XUD7	M	+		06/96 ➧ 10/98	6448.78	+	**71156**	234	158	42	ALM
PARTNER (96-) 1.8 D	D	XUD7	M	+		10/98 ➧	6448.78	+	**71156**	234	158	42	ALM
PARTNER (96-) 1.8 i	G	XU7JB	M	+/-		07/97 ➧ 10/98	6448.78	+	**71156**	234	158	42	ALM
PARTNER (96-) 1.8 i	G	XU7JB	M	+/-		11/98 ➧	6448.78	+	**71156**	234	158	42	ALM
PARTNER (96-) 1.9 D	D	XUD9,DW8, DW8B	M	-		06/96 ➧ 10/98	6448.78	+	**71156**	234	158	42	ALM
PARTNER (96-) 1.9 D	D	XUD9,DW8, DW8B	M	-		11/98 ➧	6448.78	+	**71156**	234	158	42	ALM
PARTNER (96-) 1.9 D	D	XUD9,DW8, DW8B	M	+		06/96 ➧ 10/98	6448.78	+	**71156**	234	158	42	ALM
PARTNER (96-) 1.9 D	D	XUD9,DW8, DW8B	M	+		11/98 ➧	6448.78	+	**71156**	234	158	42	ALM
PARTNER (96-) 2.0 HDi	D	DW10TD	M	+/-		01/00 ➧	6448.78	+	**71156**	234	158	42	ALM
PARTNER (02-) 1.1 i	G	TU1JP	M	+/-		11/02 ➧	6448.78	+	**71156**	234	158	42	ALM
PARTNER (02-) 1.1 i	G	TU1JP	M	+/-		11/02 ➧	6448.78	+	**71156**	234	158	42	ALM
PARTNER (02-) 1.4 i	G	TU3JP	M	+/-		11/02 ➧	6448.78	+	**71156**	234	158	42	ALM
PARTNER (02-) 1.4 i	G	TU3JP	M	+/-		11/02 ➧	6448.78	+	**71156**	234	158	42	ALM
PARTNER (02-) 1.6 HDI	D	DV6B	M	+/-		11/02 ➧	6448.78	+	**71156**	234	158	42	ALM
PARTNER (02-) 1.6 HDI 16V	D	DV6TED4	M	+/-		11/02 ➧	6448.78	+	**71156**	234	158	42	ALM
PARTNER (02-) 1.6 i 16V	G	TU5JP4	M	+/-		11/02 ➧	6448.78	+	**71156**	234	158	42	ALM
PARTNER (02-) 1.6 i 16V	G	TU5JP4	M	+/-		11/02 ➧	6448.78	+	**71156**	234	158	42	ALM
PARTNER (02-) 1.9 D	D	DW8B	M	+/-		11/02 ➧	6448.78	+	**71156**	234	158	42	ALM
PARTNER (02-) 2.0 HDi	D	DW10TD	M	+/-		11/02 ➧	6448.78	+	**71156**	234	158	42	ALM
PONTIAC LIGHT VAN													
G6 (05-) 1.9 CDTi	D		M	+/-		01/05 ➧	1618 260	+	**73377**	185	169	35	A/A
G6 (05-) 1.9 CDTi	D		A	+/-		01/05 ➧	1618 260	+	**73377**	185	169	35	A/A
G6 (05-) 2.0 i 16V TURBO	G		M	+/-		01/05 ➧	1618 260	+	**73377**	185	169	35	A/A
G6 (05-) 2.0 i 16V TURBO	G		A	+/-		01/05 ➧	1618 260	+	**73377**	185	169	35	A/A
G6 (05-) 2.8 i TURBO	G		A	+/-		01/05 ➧	1618 260	+	**73377**	185	169	35	A/A

HEATERS

	G/D			AC	Note		OE	Nissens	Dim. H W T	Mat.
RENAULT LIGHT VAN										
EXPRESS (85-) 1.0	G	C1C	M	-		11/85 ▸ 08/91	77 01 027 078+	**733591**	188 157 42	ALM
EXPRESS (85-) 1.0	G	C1C	M	-		11/85 ▸ 08/91	77 01 027 078+	**73361**	188 157 35	P/C
EXPRESS (85-) 1.1	G	C1E	M	-		11/85 ▸ 08/91	77 01 027 078+	**733591**	188 157 42	ALM
EXPRESS (85-) 1.4	G	C2J	M	-		11/85 ▸ 08/91	77 01 027 078+	**733591**	188 157 42	ALM
EXPRESS (85-) 1.4 i	G	C3J	M	-		11/85 ▸ 08/91	77 01 027 078+	**73359**	188 157 33	P/C
EXPRESS (85-) 1.6 D	D	F8M	M	-		11/85 ▸ 08/91	77 01 027 078+	**733591**	188 157 42	ALM
EXPRESS (91-) 1.1	G	C1E	M	-		09/91 ▸	77 01 027 078+	**733591**	188 157 42	ALM
EXPRESS (91-) 1.1	G	C1E	M	-		09/91 ▸	77 01 027 078+	**73361**	188 157 35	P/C
EXPRESS (91-) 1.2	G	C1G	M	-		09/91 ▸	77 01 027 078+	**733591**	188 157 42	ALM
EXPRESS (91-) 1.2 i	G	C3G	M	-		09/91 ▸	77 01 027 078+	**733591**	188 157 42	ALM
EXPRESS (91-) 1.4	G	C2J	M	-		09/91 ▸	77 01 027 078+	**733591**	188 157 42	ALM
EXPRESS (91-) 1.4	G	E6J	M	-		09/91 ▸	77 01 027 078+	**733591**	188 157 42	ALM
EXPRESS (91-) 1.4	G	E6J	M	+		09/91 ▸	77 01 027 078+	**733591**	188 157 42	ALM
EXPRESS (91-) 1.4 i	G	C3J	M	-		09/91 ▸	77 01 027 078+	**73359**	188 157 33	P/C
EXPRESS (91-) 1.4 i	G	E7J	M	-		09/91 ▸	77 01 027 078+	**73359**	188 157 33	P/C
EXPRESS (91-) 1.4 i	G	E7J	M	+		09/91 ▸	77 01 027 078+	**73359**	188 157 33	P/C
EXPRESS (91-) 1.6 D	D	F8M	M	-		09/91 ▸	77 01 027 078+	**733591**	188 157 42	ALM
EXPRESS (91-) 1.9 D	D	F8Q	M	-		09/91 ▸	77 01 027 078+	**733591**	188 157 42	ALM
EXTRA (85-) 1.0	G	C1C	M	-		11/85 ▸ 08/91	77 01 027 078+	**733591**	188 157 42	ALM
EXTRA (85-) 1.0	G	C1C	M	-		11/85 ▸ 08/91	77 01 027 078+	**73361**	188 157 35	P/C
EXTRA (85-) 1.1	G	C1E	M	-		11/85 ▸ 08/91	77 01 027 078+	**733591**	188 157 42	ALM
EXTRA (85-) 1.4	G	C2J	M	-		11/85 ▸ 08/91	77 01 027 078+	**733591**	188 157 42	ALM
EXTRA (85-) 1.4 i	G	C3J	M	-		11/85 ▸ 08/91	77 01 027 078+	**73359**	188 157 33	P/C
EXTRA (85-) 1.6 D	D	F8M	M	-		11/85 ▸ 08/91	77 01 027 078+	**733591**	188 157 42	ALM
EXTRA (91-) 1.1	G	C1E	M	-		09/91 ▸	77 01 027 078+	**733591**	188 157 42	ALM
EXTRA (91-) 1.1	G	C1E	M	-		09/91 ▸	77 01 027 078+	**73361**	188 157 35	P/C
EXTRA (91-) 1.2	G	C1G	M	-		09/91 ▸	77 01 027 078+	**733591**	188 157 42	ALM
EXTRA (91-) 1.2 i	G	C3G	M	-		09/91 ▸	77 01 027 078+	**733591**	188 157 42	ALM
EXTRA (91-) 1.4	G	C2J	M	-		09/91 ▸	77 01 027 078+	**733591**	188 157 42	ALM
EXTRA (91-) 1.4	G	E6J	M	-		09/91 ▸	77 01 027 078+	**73359**	188 157 33	P/C
EXTRA (91-) 1.4	G	E6J	M	+		09/91 ▸	77 01 027 078+	**733591**	188 157 42	ALM
EXTRA (91-) 1.4 i	G	C3J	M	-		09/91 ▸	77 01 027 078+	**73359**	188 157 33	P/C
EXTRA (91-) 1.4 i	G	E7J	M	-		09/91 ▸	77 01 027 078+	**733591**	188 157 42	ALM
EXTRA (91-) 1.4 i	G	E7J	M	+		09/91 ▸	77 01 027 078+	**73359**	188 157 33	P/C
EXTRA (91-) 1.6 D	D	F8M	M	-		09/91 ▸	77 01 027 078+	**733591**	188 157 42	ALM
EXTRA (91-) 1.9 D	D	F8Q	M	-		09/91 ▸	77 01 027 078+	**733591**	188 157 42	ALM
KANGOO (98-) 1.2 i	G	D7F	M	-		01/98 ▸	77 01 205 538	**72985**	234 152 40	P/A
KANGOO (98-) 1.2 i	G	D7F	M	+		01/98 ▸	77 01 205 538	**72985**	234 152 40	P/A
KANGOO (98-) 1.2 i 16V	G	D4D	M	-		01/98 ▸	77 01 205 538	**72985**	234 152 40	P/A
KANGOO (98-) 1.2 i 16V	G	D4D	M	+		01/98 ▸	77 01 205 538	**72985**	234 152 40	P/A
KANGOO (98-) 1.2 i 16V	G	D4F	M	-		01/98 ▸	77 01 205 538	**72985**	234 152 40	P/A
KANGOO (98-) 1.2 i 16V	G	D4F	M	+		01/98 ▸ 02/03	77 01 205 538	**72985**	234 152 40	P/A
KANGOO (98-) 1.2 i 16V	G	D4F	M	+		03/03 ▸	77 01 205 538	**72985**	234 152 40	P/A
KANGOO (98-) 1.4 i	G	E7J	M	-		01/98 ▸	77 01 205 538	**72985**	234 152 40	P/A
KANGOO (98-) 1.4 i	G	E7J	M	+		01/98 ▸	77 01 205 538	**72985**	234 152 40	P/A
KANGOO (98-) 1.5 dCi	D	K9K	M	-		10/01 ▸	77 01 205 538	**72985**	234 152 40	P/A
KANGOO (98-) 1.5 dCi	D	K9K	M	+		03/03 ▸ 12/03	77 01 205 538	**72985**	234 152 40	P/A
KANGOO (98-) 1.5 dCi	D	K9K	M	+		09/02 ▸ 03/03	77 01 205 538	**72985**	234 152 40	P/A
KANGOO (98-) 1.5 dCi	D	K9K	M	+		10/01 ▸ 09/02	77 01 205 538	**72985**	234 152 40	P/A
KANGOO (98-) 1.5 dCi	D	K9K	M	+		12/03 ▸	77 01 205 538	**72985**	234 152 40	P/A

HEATERS

	G/D			AC	Note		OE	Nissens	Dim. H W T	Mat.
RENAULT LIGHT VAN (../..)										
KANGOO (98-) 1.5 dCi	D	K9K	M	+/-		10/01 ➧	77 01 205 538	**72985**	234 152 40	P/A
KANGOO (98-) 1.6 i	D	K7M	M	+/-		12/99 ➧	77 01 034 551+	**73252**	234 158 49	ALM
KANGOO (98-) 1.6 i 16V	G	K4M	M/A	-		01/02 ➧	77 01 034 551+	**73252**	234 158 49	ALM
KANGOO (98-) 1.6 i 16V	G	K4M	M/A	+		01/02 ➧	77 01 034 551+	**73252**	234 158 49	ALM
KANGOO (98-) 1.9 D	D	F8Q	M	-		09/97 ➧	77 01 205 538	**72985**	234 152 40	P/A
KANGOO (98-) 1.9 D	D	F8Q	M	+		09/97 ➧	77 01 205 538	**72985**	234 152 40	P/A
KANGOO (98-) 1.9 dCi	D	F9Q	M	+/-		01/02 ➧	77 01 205 538	**72985**	234 152 40	P/A
KANGOO (98-) 1.9 dTi	G	F8Q	M	-		03/00 ➧	77 01 205 538	**72985**	234 152 40	P/A
KANGOO (98-) 1.9 dTi	G	F9Q	M	+		12/99 ➧ 03/00	77 01 205 538	**72985**	234 152 40	P/A
MASTER (80-) 2.0	G	J5R	M	-		08/80 ➧	77 01 026 569	**73358**	250 190 42	P/A
MASTER (80-) 2.1 D	D	J8S	M	-		09/80 ➧	77 01 026 569	**73358**	250 190 42	P/A
MASTER (80-) 2.4 D	D	S8U	M	-		09/80 ➧	77 01 026 569	**73358**	250 190 42	P/A
MASTER (80-) 2.5 D	D	S9U	M	-		03/89 ➧ 09/94	77 01 026 569	**73358**	250 190 42	P/A
MASTER (80-) 2.5 TD	D	S9U	M	-		03/89 ➧	77 01 026 569	**73358**	250 190 42	P/A
MASTER (98-) 1.9 dCi	D	F9Q	M	-		01/98 ➧ 11/03	77 01 205 584	**73375**	330 157 42	P/A
MASTER (98-) 1.9 dCi	D	F9Q	M	-		11/03 ➧	77 01 205 584	**73375**	330 157 42	P/A
MASTER (98-) 1.9 dCi	D	F9Q	M	+		01/98 ➧ 06/01	77 01 205 584	**73375**	330 157 42	P/A
MASTER (98-) 1.9 dCi	D	F9Q	M	+		01/03 ➧ 11/03	77 01 205 584	**73375**	330 157 42	P/A
MASTER (98-) 1.9 dCi	D	F9Q	M	+		06/01 ➧ 01/03	77 01 205 584	**73375**	330 157 42	P/A
MASTER (98-) 1.9 dCi	D	F9Q	M	+		11/03 ➧	77 01 207 992+	**72207**	235 145 42	P/A
MASTER (98-) 1.9 dCi	D	F9Q	M	+		11/03 ➧	77 01 207 993	**72665**	215 202 12	P/A
MASTER (98-) 2.2 dCi	D	G9T	M	-		01/98 ➧ 11/03	77 01 205 584	**73375**	330 157 42	P/A
MASTER (98-) 2.2 dCi	D	G9T	M	-		11/03 ➧	77 01 205 584	**73375**	330 157 42	P/A
MASTER (98-) 2.2 dCi	D	G9T	M	+		01/98 ➧ 06/01	77 01 205 584	**73375**	330 157 42	P/A
MASTER (98-) 2.2 dCi	D	G9T	M	+		01/03 ➧ 11/03	77 01 205 584	**73375**	330 157 42	P/A
MASTER (98-) 2.2 dCi	D	G9T	M	+		06/01 ➧ 01/03	77 01 205 584	**73375**	330 157 42	P/A
MASTER (98-) 2.2 dCi	D	G9T	M	+		11/03 ➧	77 01 207 992+	**72207**	235 145 42	P/A
MASTER (98-) 2.2 dTi	D	G9T	M	-		01/98 ➧ 11/03	77 01 205 584	**73375**	330 157 42	P/A
MASTER (98-) 2.2 dTi	D	G9T	M	+		01/98 ➧ 06/01	77 01 205 584	**73375**	330 157 42	P/A
MASTER (98-) 2.2 dTi	D	G9T	M	+		01/03 ➧ 11/03	77 01 205 584	**73375**	330 157 42	P/A
MASTER (98-) 2.2 dTi	D	G9T	M	+		06/01 ➧ 01/03	77 01 205 584	**73375**	330 157 42	P/A
MASTER (98-) 2.5 D	D	S8U	M	-		07/98 ➧ 01/01	77 01 205 584	**73375**	330 157 42	P/A
MASTER (98-) 2.5 D	D	S8U	M	+/-		09/97 ➧	77 01 205 584	**73375**	330 157 42	P/A
MASTER (98-) 2.5 dCi	D	G9U	M	-		07/98 ➧ 11/03	77 01 205 584	**73375**	330 157 42	P/A
MASTER (98-) 2.5 dCi	D	G9U	M	-		11/03 ➧	77 01 205 584	**73375**	330 157 42	P/A
MASTER (98-) 2.5 dCi	D	G9U	M	+		01/03 ➧ 11/03	77 01 205 584	**73375**	330 157 42	P/A
MASTER (98-) 2.5 dCi	D	G9U	M	+		06/01 ➧ 01/03	77 01 205 584	**73375**	330 157 42	P/A
MASTER (98-) 2.5 dCi	D	G9U	M	+		07/98 ➧ 06/01	77 01 205 584	**73375**	330 157 42	P/A
MASTER (98-) 2.5 dCi	D	G9U	M	+		11/03 ➧	77 01 207 992+	**72207**	235 145 42	P/A
MASTER (98-) 2.8 dTi	D	S9W	M	-		07/98 ➧	77 01 205 584	**73375**	330 157 42	P/A
MASTER (98-) 2.8 dTi	D	S9W	M	+		09/98 ➧ 01/03	77 01 205 584	**73375**	330 157 42	P/A
MASTER (98-) 3.0 dCi	D	ZD30	M	+/-		07/03 ➧	77 01 205 584	**73375**	330 157 42	P/A
RAPID (85-) 1.0	G	C1C	M	-		11/85 ➧ 08/91	77 01 027 078+	**733591**	188 157 42	ALM
RAPID (85-) 1.0	G	C1C	M	-		11/85 ➧ 08/91	77 01 027 078+	**73361**	188 157 35	P/C
RAPID (85-) 1.1	G	C1E	M	-		11/85 ➧ 08/91	77 01 027 078+	**733591**	188 157 42	ALM
RAPID (85-) 1.4	G	C2J	M	-		11/85 ➧ 08/91	77 01 027 078+	**733591**	188 157 42	ALM
RAPID (85-) 1.4 i	G	C3J	M	-		11/85 ➧ 08/91	77 01 027 078+	**73359**	188 157 33	P/C
RAPID (85-) 1.6 D	D	F8M	M	-		11/85 ➧ 08/91	77 01 027 078+	**733591**	188 157 42	ALM
RAPID (91-) 1.1	G	C1E	M	-		09/91 ➧	77 01 027 078+	**733591**	188 157 42	ALM
RAPID (91-) 1.1	G	C1E	M	-		09/91 ➧	77 01 027 078+	**73361**	188 157 35	P/C

HEATERS

	G/D			AC	Note		OE	Nissens	Dim. H W T	Mat.
RENAULT LIGHT VAN (../..)										
RAPID (91-) 1.2	G	C1G	M	-		09/91 ➧	77 01 027 078+	**733591**	188 157 42	ALM
RAPID (91-) 1.2 i	G	C3G	M	-		09/91 ➧	77 01 027 078+	**733591**	188 157 42	ALM
RAPID (91-) 1.4	G	C2J	M	-		09/91 ➧	77 01 027 078+	**733591**	188 157 42	ALM
RAPID (91-) 1.4	G	E6J	M	-		09/91 ➧	77 01 027 078+	**733591**	188 157 42	ALM
RAPID (91-) 1.4	G	E6J	M	+		09/91 ➧	77 01 027 078+	**733591**	188 157 42	ALM
RAPID (91-) 1.4 i	G	C3J	M	-		09/91 ➧	77 01 027 078+	**73359**	188 157 33	P/C
RAPID (91-) 1.4 i	G	E7J	M	-		09/91 ➧	77 01 027 078+	**73359**	188 157 33	P/C
RAPID (91-) 1.4 i	G	E7J	M	+		09/91 ➧	77 01 027 078+	**73359**	188 157 33	P/C
RAPID (91-) 1.6 D	D	F8M	M	-		09/91 ➧	77 01 027 078+	**733591**	188 157 42	ALM
RAPID (91-) 1.9 D	D	F8Q	M	-		09/91 ➧	77 01 027 078+	**733591**	188 157 42	ALM
TRAFIC (80-) 1.4	G	847	M	-		09/80 ➧ 02/89	77 04 000 112	**73330**	234 175 42	P/A
TRAFIC (80-) 1.6	G	841/A1M	M	-		09/80 ➧ 02/89	77 04 000 112	**73330**	234 175 42	P/A
TRAFIC (80-) 1.7	G	F1N	M	-		09/80 ➧ 02/89	77 04 000 112	**73330**	234 175 42	P/A
TRAFIC (80-) 2.0	G	829/J5R	M	-		07/86 ➧ 02/89	77 04 000 112	**73330**	234 175 42	P/A
TRAFIC (80-) 2.0	G	829/J5R	M	-		09/80 ➧ 06/86	77 04 000 112	**73330**	234 175 42	P/A
TRAFIC (80-) 2.1 D	D	852	M	-		07/86 ➧ 02/89	77 04 000 112	**73330**	234 175 42	P/A
TRAFIC (80-) 2.1 D	D	852	M	-		09/80 ➧ 06/86	77 04 000 112	**73330**	234 175 42	P/A
TRAFIC (80-) 2.4 D	D	S8U	M	-		09/80 ➧ 02/89	77 04 000 112	**73330**	234 175 42	P/A
TRAFIC (89-) 1.4	G	C1J	M	-		03/89 ➧	77 04 000 112	**73330**	234 175 42	P/A
TRAFIC (89-) 1.7	G	F1N	M	-		03/89 ➧	77 04 000 112	**73330**	234 175 42	P/A
TRAFIC (89-) 2.0	G	J5R	M	-		03/89 ➧	77 04 000 112	**73330**	234 175 42	P/A
TRAFIC (89-) 2.0 i	G	F4R	M	-		06/94 ➧	77 04 000 112	**73330**	234 175 42	P/A
TRAFIC (89-) 2.1 D	D	852	M	-		03/89 ➧ 06/94	77 04 000 112	**73330**	234 175 42	P/A
TRAFIC (89-) 2.1 D	D	J8S	M	-		06/94 ➧	77 04 000 112	**73330**	234 175 42	P/A
TRAFIC (89-) 2.2	G	J7T	M	-		03/89 ➧	77 04 000 112	**73330**	234 175 42	P/A
TRAFIC (89-) 2.2 i	G	J7T	M	-		06/94 ➧	77 04 000 112	**73330**	234 175 42	P/A
TRAFIC (89-) 2.5 D	D	S8U	M	-		03/89 ➧	77 04 000 112	**73330**	234 175 42	P/A
TRAFIC (89-) 2.5 TD	D	S8U	M	-		03/89 ➧	77 04 000 112	**73330**	234 175 42	P/A
TRAFIC (97-) 1.9 D	D	F8Q	M	-		09/97 ➧ 03/01	77 04 000 112	**73330**	234 175 42	P/A
TRAFIC (97-) 1.9 dTi	D	F8Q	M	+/-		09/97 ➧ 03/01	77 04 000 112	**73330**	234 175 42	P/A
TRAFIC (97-) 2.5 dTi	D	S8U	M	+/-		09/97 ➧ 03/01	77 04 000 112	**73330**	234 175 42	P/A
SEAT LIGHT VAN										
INCA (95-) 1.4 i	G	AEX	M	-		11/95 ➧ 12/97	1H1.819.031 A+	**73962**	234 157 33	ALM
INCA (95-) 1.4 i	G	AEX	M	-		11/95 ➧ 12/97	1H2.819.031 A+	**73961**	234 156 42	ALM
INCA (95-) 1.4 i	G	AEX	M	+		11/95 ➧ 12/97	1H1.819.031 A+	**73962**	234 157 33	ALM
INCA (95-) 1.4 i	G	AKV	M	-		12/97 ➧ 09/00	1H1.819.031 A+	**73962**	234 157 33	ALM
INCA (95-) 1.4 i	G	AKV	M	+		12/97 ➧ 09/00	1H1.819.031 A+	**73962**	234 157 33	ALM
INCA (95-) 1.4 i	G	APQ	M	-		12/97 ➧ 06/03	1H1.819.031 A+	**73962**	234 157 33	ALM
INCA (95-) 1.4 i	G	APQ	M	+		12/97 ➧ 06/03	1H1.819.031 A+	**73962**	234 157 33	ALM
INCA (95-) 1.4 i	G	AUD	M	+/-		09/00 ➧ 06/03	1H1.819.031 A+	**73962**	234 157 33	ALM
INCA (95-) 1.4 i 16V	G	AUA	M	+/-		09/00 ➧ 06/03	1H1.819.031 A+	**73962**	234 157 33	ALM
INCA (95-) 1.6 i	G	1F	M	-		11/95 ➧ 05/97	1H1.819.031 A+	**73962**	234 157 33	ALM
INCA (95-) 1.6 i	G	1F	M	+		11/95 ➧ 05/97	1H1.819.031 A+	**73962**	234 157 33	ALM
INCA (95-) 1.6 i	G	AEE	M	-		06/97 ➧ 09/00	1H1.819.031 A+	**73962**	234 157 33	ALM
INCA (95-) 1.6 i	G	AEE	M	+		06/97 ➧ 09/00	1H1.819.031 A+	**73962**	234 157 33	ALM
INCA (95-) 1.7 SDi	D	AHB	M	-		07/96 ➧ 09/00	1H1.819.031 A+	**73962**	234 157 33	ALM
INCA (95-) 1.7 SDi	D	AHB	M	+		07/96 ➧ 09/00	1H1.819.031 A+	**73962**	234 157 33	ALM
INCA (95-) 1.9 D	D	1Y	M	-		11/95 ➧ 06/03	1H1.819.031 A+	**73962**	234 157 33	ALM
INCA (95-) 1.9 D	D	1Y	M	+		11/95 ➧ 06/03	1H1.819.031 A+	**73962**	234 157 33	ALM

HEATERS

	G/D			AC	Note		OE	Nissens	Dim. H W T	Mat.
SEAT LIGHT VAN (../..)										
INCA (95-) 1.9 Sdi	D	AEY	M	-		11/95 ➧ 09/00	1H1.819.031 A+	**73962**	234 157 33	ALM
INCA (95-) 1.9 Sdi	D	AEY	M	+		11/95 ➧ 09/00	1H1.819.031 A+	**73962**	234 157 33	ALM
INCA (95-) 1.9 Sdi	D	AYQ	M	+/-		09/00 ➧ 06/03	1H1.819.031 A+	**73962**	234 157 33	ALM
INCA (95-) 1.9 Sdi	D	AYQ	M	+/-		09/00 ➧ 06/03	1H1.819.031 A+	**73962**	234 157 33	ALM
TALBOT LIGHT VAN										
EXPRESS (81-) 1.8	G	XM7T	M	-		01/81 ➧	5929122 +	**72980**	227 150 40	P/A
EXPRESS (81-) 1.8	G	XM7T	M	-		01/81 ➧	5947797 +	**71148**	237 180 38	M/C
EXPRESS (81-) 1.8	G	XM7T	M	-		01/81 ➧	6448.62 +	**73988**	243 177 42	ALM
EXPRESS (81-) 1.9 D	D	XUD9A	M	-		01/81 ➧	5929122 +	**72980**	227 150 40	P/A
EXPRESS (81-) 1.9 D	D	XUD9A	M	-		01/81 ➧	6448.60 +	**71144**	232 192 42	P/A
EXPRESS (81-) 1.9 TD	D	M705T	M	-		01/81 ➧	5929122 +	**72980**	227 150 40	P/A
EXPRESS (81-) 2.0	G	XN1T	M	-		01/81 ➧	5929122 +	**72980**	227 150 40	P/A
EXPRESS (81-) 2.5 D	D	CRD93	M	-		01/81 ➧	5929122 +	**72980**	227 150 40	P/A
EXPRESS (81-) 2.5 TD	D	CRD93LS	M	-		01/81 ➧	5929122 +	**72980**	227 150 40	P/A
TOYOTA LIGHT VAN										
HI-ACE (84-) 2.4 D	D	2L	M	+/-	LH 51	01/84 ➧ 08/89		**73456**	200 136 35	M/C
HI-ACE (84-) 2.4 D	D	2L	M	+/-	LH 61	01/84 ➧ 08/89		**73456**	200 136 35	M/C
HI-ACE (84-) 2.4 D	D	2L	M	+/-	LH 71	01/84 ➧ 08/89		**73456**	200 136 35	M/C
HI-ACE (89-) 2.0 i	G	1 RZ	M	+/-	RZH 10#	08/89 ➧ 08/95		**73454**	213 146 52	M/C
HI-ACE (89-) 2.0 i	G	1 RZ	M	+/-	RZH 10#	08/89 ➧ 08/95		**73454**	213 146 52	M/C
HI-ACE (89-) 2.0 i	G	1 RZ	M	+/-	RZH 11#	08/89 ➧ 08/95		**73454**	213 146 52	M/C
HI-ACE (89-) 2.0 i	G	1 RZ	M	+/-	RZH 11#	08/89 ➧ 08/95		**73454**	213 146 52	M/C
HI-ACE (89-) 2.4 D	D	2L	M	+/-	LH 10#	08/89 ➧ 08/95		**73454**	213 146 52	M/C
HI-ACE (89-) 2.4 D	D	2L	M	+/-	LH 10#	08/89 ➧ 08/95		**73454**	213 146 52	M/C
HI-ACE (89-) 2.4 D	D	2L	M	+/-	LH 11#	08/89 ➧ 08/95		**73454**	213 146 52	M/C
HI-ACE (89-) 2.4 D	D	2L	M	+/-	LH 12#	08/89 ➧ 08/95		**73454**	213 146 52	M/C
HI-ACE (89-) 2.4 D	D	2L	A	+/-	LH 10#	08/89 ➧ 08/95		**73454**	213 146 52	M/C
HI-ACE (89-) 2.4 D	D	2L	A	+/-	LH 11#	08/89 ➧ 08/95		**73454**	213 146 52	M/C
HI-ACE (89-) 2.4 D	D	2L	A	+/-	LH 12#	08/89 ➧ 08/95		**73454**	213 146 52	M/C
HI-ACE (89-) 2.4 i	G	2 RZ-E	M	+/-	RZH 10#	03/92 ➧ 08/95		**73454**	213 146 52	M/C
HI-ACE (89-) 2.4 i	G	2 RZ-E	M	+/-	RZH 11#	03/92 ➧ 08/95		**73454**	213 146 52	M/C
HI-ACE (89-) 2.4 i	G	2 RZ-E	M	+/-	RZH 10#	08/89 ➧ 08/95		**73454**	213 146 52	M/C
HI-ACE (89-) 2.4 i	G	2 RZ-E	M	+/-	RZH 11#	08/89 ➧ 08/95		**73454**	213 146 52	M/C
HI-ACE (89-) 2.8 D	D	3L	M	+/-	LH 10#	08/89 ➧ 08/95		**73454**	213 146 52	M/C
HI-ACE (89-) 2.8 D	D	3L	M	+/-	LH 10#	08/89 ➧ 08/95		**73454**	213 146 52	M/C
HI-ACE (89-) 2.8 D	D	3L	M	+/-	LH 11#	08/89 ➧ 08/95		**73454**	213 146 52	M/C
HI-ACE (89-) 2.8 D	D	3L	M	+/-	LH 12#	08/89 ➧ 08/95		**73454**	213 146 52	M/C
HI-ACE (89-) 2.8 D	D	3L	M	+/-	LH 11#	08/89 ➧ 08/95		**73454**	213 146 52	M/C
HI-ACE (89-) 2.8 D	D	3L	M	+/-	LH 12#	08/89 ➧ 08/95		**73454**	213 146 52	M/C
HI-ACE (95-) 2.4 D	D	2L	M	+/-	LXH 1#	08/95 ➧ 08/01	87107-26010	**73457**	190 160 35	M/C
HI-ACE (95-) 2.4 D	D	2L	M	+/-	LXH 2#	08/95 ➧ 08/01	87107-26010	**73457**	190 160 35	M/C
HI-ACE (95-) 2.4 i	G	2RZE	M	+/-	RCH 1#	08/95 ➧ 08/01	87107-26010	**73457**	190 160 35	M/C
HI-ACE (95-) 2.4 i	G	2RZE	M	+/-	RCH 2#	08/95 ➧ 08/01	87107-26010	**73457**	190 160 35	M/C
HI-ACE (95-) 2.4 TD	D	2LT	M	+/-	LXH 1#	08/95 ➧ 08/01	87107-26010	**73457**	190 160 35	M/C
HI-ACE (95-) 2.4 TD	D	2LT	M	+/-	LXH 2#	08/95 ➧ 08/01	87107-26010	**73457**	190 160 35	M/C
HI-ACE (95-) 2.7 i	G	3RZFE	M	+/-	RCH 1#	08/95 ➧ 08/01	87107-26010	**73457**	190 160 35	M/C
HI-ACE (95-) 2.7 i	G	3RZFE	M	+/-	RCH 2#	08/95 ➧ 08/01	87107-26010	**73457**	190 160 35	M/C
HI-ACE (95-) 3.0 i	G	1KZTE	M/A	+/-		08/95 ➧ 08/01	87107-26010	**73457**	190 160 35	M/C

HEATERS

	G/D			AC	Note		OE	Nissens	Dim. H W T	Mat.
TOYOTA LIGHT VAN (../..)										
HI-ACE (01-) 2.5 TD	D	2KDFTV	M	+/-	KLH 1#	08/01 ➧		**73457**	190 160 35	M/C
HI-ACE (01-) 2.5 TD	D	2KDFTV	M	+/-	KLH 2#	08/01 ➧		**73457**	190 160 35	M/C
VOLKSWAGEN LIGHT VAN										
CADDY (82-) 1.5	G	JB	M	-		10/82 ➧ 10/83	171.819.031 E	**73940**	234 156 40	ALM
CADDY (82-) 1.6	G	EM	M	-		10/82 ➧ 10/83	171.819.031 E	**73940**	234 156 40	ALM
CADDY (82-) 1.6	G	EW	M	-		08/83 ➧ 07/92	171.819.031 E	**73940**	234 156 40	ALM
CADDY (82-) 1.6	G	EW	A	-		08/83 ➧ 07/92	171.819.031 E	**73940**	234 156 40	ALM
CADDY (82-) 1.6	G	HN	M	-		08/83 ➧ 07/89	171.819.031 E	**73940**	234 156 40	ALM
CADDY (82-) 1.6	G	HN	A	-		08/83 ➧ 07/89	171.819.031 E	**73940**	234 156 40	ALM
CADDY (82-) 1.6 D	D	JK	M	-		10/82 ➧ 07/90	171.819.031 E	**73940**	234 156 40	ALM
CADDY (82-) 1.6 D	D	ME	M	-		08/90 ➧ 07/92	171.819.031 E	**73940**	234 156 40	ALM
CADDY (82-) 1.8	G	JH	M	-		08/85 ➧ 07/92	171.819.031 E	**73940**	234 156 40	ALM
CADDY (82-) 1.8	G	JH	A	-		08/85 ➧ 07/92	171.819.031 E	**73940**	234 156 40	ALM
CADDY (95-) 1.4 i	G	AEX	M	-		11/95 ➧ 12/97	1H1.819.031 A+	**73962**	234 157 33	ALM
CADDY (95-) 1.4 i	G	AEX	M	-		11/95 ➧ 12/97	1H2.819.031 A	**73961**	234 156 42	ALM
CADDY (95-) 1.4 i	G	AKV	M	-		11/97 ➧ 09/00	1H1.819.031 A+	**73962**	234 157 33	ALM
CADDY (95-) 1.4 i	G	APQ	M	-		12/97 ➧ 06/03	1H1.819.031 A+	**73962**	234 157 33	ALM
CADDY (95-) 1.4 i	G	AUD	M	-		09/00 ➧ 06/03	1H1.819.031 A+	**73962**	234 157 33	ALM
CADDY (95-) 1.4 i 16V	G	AUA	M	-		09/00 ➧ 06/03	1H1.819.031 A+	**73962**	234 157 33	ALM
CADDY (95-) 1.6 i	G	1F	M	-		11/95 ➧ 05/97	1H1.819.031 A+	**73962**	234 157 33	ALM
CADDY (95-) 1.6 i	G	1F	M	+		11/95 ➧ 05/97	1H1.819.031 A+	**73962**	234 157 33	ALM
CADDY (95-) 1.6 i	G	AEE	M	-		06/97 ➧ 09/00	1H1.819.031 A+	**73962**	234 157 33	ALM
CADDY (95-) 1.7 SDi	D	AHB	M	-		07/96 ➧ 09/00	1H1.819.031 A+	**73962**	234 157 33	ALM
CADDY (95-) 1.7 SDi	D	AHB	M	+		07/96 ➧ 09/00	1H1.819.031 A+	**73962**	234 157 33	ALM
CADDY (95-) 1.9 D	D	1Y	M	-		11/95 ➧ 06/03	1H1.819.031 A+	**73962**	234 157 33	ALM
CADDY (95-) 1.9 D	D	1Y	M	+		11/95 ➧ 06/03	1H1.819.031 A+	**73962**	234 157 33	ALM
CADDY (95-) 1.9 Sdi	D	AEY	M	-		11/95 ➧ 09/00	1H1.819.031 A+	**73962**	234 157 33	ALM
CADDY (95-) 1.9 Sdi	D	AEY	M	+		11/95 ➧ 09/00	1H1.819.031 A+	**73962**	234 157 33	ALM
CADDY (95-) 1.9 Sdi	D	AYQ	M	+/-		09/00 ➧ 06/03	1H1.819.031 A+	**73962**	234 157 33	ALM
CADDY (95-) 1.9 Sdi	D	AYQ	M	+/-		09/00 ➧ 06/03	1H1.819.031 A+	**73962**	234 157 33	ALM
CADDY (95-) 1.9 TDi	D	1Z	M	-		10/96 ➧ 03/97	1H1.819.031 A+	**73962**	234 157 33	ALM
CADDY (95-) 1.9 TDi	D	1Z	M	+		10/96 ➧ 03/97	1H1.819.031 A+	**73962**	234 157 33	ALM
CADDY (95-) 1.9 TDi	D	AHU	M	-	90 HP	10/96 ➧ 09/00	1H1.819.031 A+	**73962**	234 157 33	ALM
CADDY (95-) 1.9 TDi	D	AHU	M	+		10/96 ➧ 09/00	1H1.819.031 A+	**73962**	234 157 33	ALM
CADDY (95-) 1.9 TDi	D	ALE	M	-		09/97 ➧ 09/00	1H1.819.031 A+	**73962**	234 157 33	ALM
CADDY (95-) 1.9 TDi	D	ALE	M	+		09/97 ➧ 09/00	1H1.819.031 A+	**73962**	234 157 33	ALM
CADDY (95-) 1.9 TDi	D	ALH	M	-		09/00 ➧ 06/03	1H1.819.031 A+	**73962**	234 157 33	ALM
CADDY (04-) 1.4 i 16V	G	BCA	M	+/-		02/04 ➧	1K0.819.031	**70228**	190 180 35	A/A
CADDY (04-) 1.6 i	G	BGU	M	+/-		04/04 ➧	1K0.819.031	**70228**	190 180 35	A/A
CADDY (04-) 1.6 i	G	BSE	M	+/-		04/04 ➧	1K0.819.031	**70228**	190 180 35	A/A
CADDY (04-) 1.6 i	G	BSF	M	+/-		04/04 ➧	1K0.819.031	**70228**	190 180 35	A/A
CADDY (04-) 1.9 TDi	D	BJB	M	+/-	105 HP	02/04 ➧	1K0.819.031	**70228**	190 180 35	A/A
CADDY (04-) 1.9 TDi	D	BLS	M	+/-	105 HP	02/04 ➧	1K0.819.031	**70228**	190 180 35	A/A
CADDY (04-) 1.9 TDi	D	BSU	M	+/-		02/04 ➧	1K0.819.031	**70228**	190 180 35	A/A
CADDY (04-) 2.0 GAS	G	BSX	M	+/-		02/04 ➧	1K0.819.031	**70228**	190 180 35	A/A
CADDY (04-) 2.0 SDI	D	BDJ	M	+/-		02/04 ➧	1K0.819.031	**70228**	190 180 35	A/A
CADDY (04-) 2.0 SDI	D	BST	M	+/-		02/04 ➧	1K0.819.031	**70228**	190 180 35	A/A
LT (82-) 2.4	G	1E	M	-		10/88 ➧ 07/96	281.265.303 A	**73950**	300 190 42	P/A
LT (82-) 2.4	G	DL	M	-		12/82 ➧ 07/92	281.265.303 A	**73950**	300 190 42	P/A

HEATERS

	G/D			AC	Note		OE	Nissens	Dim. H W T	Mat.
VOLKSWAGEN LIGHT VAN (../..)										
LT (82-) 2.4	G	HS	M	-		04/83 ➧ 07/86	281.265.303 +	**73950**	300 190 42	P/A
LT (82-) 2.4 D	D	1S	M	-		08/89 ➧ 07/92	281.265.303 A	**73950**	300 190 42	P/A
LT (82-) 2.4 D	D	ACT	M	-		08/92 ➧ 07/96	281.265.303 +	**73950**	300 190 42	P/A
LT (82-) 2.4 D	D	DW	M	-		12/82 ➧ 07/92	281.265.303 A	**73950**	300 190 42	P/A
LT (82-) 2.4 TD	D	1G	M	-		08/88 ➧ 08/92	281.265.303 A	**73950**	300 190 42	P/A
LT (82-) 2.4 TD	D	ACL	M	-		08/92 ➧ 07/96	281.265.303 A	**73950**	300 190 42	P/A
LT (82-) 2.4 TD	D	DV	M	-		12/82 ➧ 08/92	281.265.303 A	**73950**	300 190 42	P/A
TOURAN (03-) 1.6 FSI	G	BAG	M	+	HD	02/03 ➧	1K0.819.031	**70228**	190 180 35	A/A
TOURAN (03-) 1.6 FSI	G	BAG	M	+/-		02/03 ➧	1K0.819.031	**70228**	190 180 35	A/A
TOURAN (03-) 1.6 FSI	G	BAG	A	+/-		02/03 ➧	1K0.819.031	**70228**	190 180 35	A/A
TOURAN (03-) 1.6 FSI	G	BLP	M	+	HD	02/03 ➧	1K0.819.031	**70228**	190 180 35	A/A
TOURAN (03-) 1.6 FSI	G	BLP	M	+/-		02/03 ➧	1K0.819.031	**70228**	190 180 35	A/A
TOURAN (03-) 1.6 FSI	G	BLP	A	+/-		02/03 ➧	1K0.819.031	**70228**	190 180 35	A/A
TOURAN (03-) 1.6 i 16V	G	BGU	M	+/-		02/03 ➧	1K0.819.031	**70228**	190 180 35	A/A
TOURAN (03-) 1.6 i 16V	G	BGU	A	+/-		02/03 ➧	1K0.819.031	**70228**	190 180 35	A/A
TOURAN (03-) 1.6 i 16V	G	BLF	M	+/-		02/03 ➧	1K0.819.031	**70228**	190 180 35	A/A
TOURAN (03-) 1.6 i 16V	G	BLF	A	+/-		02/03 ➧	1K0.819.031	**70228**	190 180 35	A/A
TOURAN (03-) 1.6 i 16V	G	BSE	M	+/-		02/03 ➧	1K0.819.031	**70228**	190 180 35	A/A
TOURAN (03-) 1.6 i 16V	G	BSF	M	+/-		02/03 ➧	1K0.819.031	**70228**	190 180 35	A/A
TOURAN (03-) 1.9 TDi	D	AVQ	M	+	HD	02/03 ➧	1K0.819.031	**70228**	190 180 35	A/A
TOURAN (03-) 1.9 TDi	D	AVQ	M	+/-		02/03 ➧	1K0.819.031	**70228**	190 180 35	A/A
TOURAN (03-) 1.9 TDi	D	BKC	M/A	-		02/03 ➧	1K0.819.031	**70228**	190 180 35	A/A
TOURAN (03-) 1.9 TDi	D	BKC	M/A	+		02/03 ➧	1K0.819.031	**70228**	190 180 35	A/A
TOURAN (03-) 1.9 TDi	D	BRU	M/A	-		02/03 ➧	1K0.819.031	**70228**	190 180 35	A/A
TOURAN (03-) 1.9 TDi	D	BRU	M/A	+		02/03 ➧	1K0.819.031	**70228**	190 180 35	A/A
TOURAN (03-) 2.0 FSi	G	AXW	M/A	+/-		02/03 ➧	1K0.819.031	**70228**	190 180 35	A/A
TOURAN (03-) 2.0 FSi	G	BLR	M/A	+/-		02/03 ➧	1K0.819.031	**70228**	190 180 35	A/A
TOURAN (03-) 2.0 GAS	G	BSX	M	+/-		02/03 ➧	1K0.819.031	**70228**	190 180 35	A/A
TOURAN (03-) 2.0 PD TDi	D	AZV	M/A	+		02/03 ➧	1K0.819.031	**70228**	190 180 35	A/A
TOURAN (03-) 2.0 PD TDi	D	BKD	M/A	+		02/03 ➧	1K0.819.031	**70228**	190 180 35	A/A
TOURAN (03-) 2.0 PD TDi	D	BLY	M/A	+		02/03 ➧	1K0.819.031	**70228**	190 180 35	A/A
TOURAN (03-) 2.0 PD TDi	D	BMM	M/A	+		02/03 ➧	1K0.819.031	**70228**	190 180 35	A/A
TOURAN (03-) 2.0 PD TDi	D	BMN	M/A	+		02/03 ➧	1K0.819.031	**70228**	190 180 35	A/A
TRANSPORTER T3 (79-) 1.6 D	D	CS	M	-		01/81 ➧ 08/82	867.819.121 +	**73964**	212 138 42	P/A
TRANSPORTER T3 (79-) 1.6 D	D	CS	M	-		08/82 ➧ 08/87	867.819.121 +	**73964**	212 138 42	P/A
TRANSPORTER T3 (79-) 1.6 D	D	KY	M	-		01/81 ➧ 08/82	867.819.121 +	**73964**	212 138 42	P/A
TRANSPORTER T3 (79-) 1.6 D	D	KY	M	-		08/82 ➧ 08/87	867.819.121 +	**73964**	212 138 42	P/A
TRANSPORTER T3 (79-) 1.6 TD	D	JX	M	-		09/84 ➧ 09/90	867.819.121 +	**73964**	212 138 42	P/A
TRANSPORTER T3 (79-) 1.9	G	DF	M	-		08/82 ➧ 09/90	867.819.121 +	**73964**	212 138 42	P/A
TRANSPORTER T3 (79-) 1.9	G	DF	M	-		08/82 ➧ 09/90	867.819.121 +	**73964**	212 138 42	P/A
TRANSPORTER T3 (79-) 1.9	G	DG	M	-		08/82 ➧ 09/90	867.819.121 +	**73964**	212 138 42	P/A
TRANSPORTER T3 (79-) 1.9	G	DG	M	-		08/82 ➧ 09/90	867.819.121 +	**73964**	212 138 42	P/A
TRANSPORTER T3 (79-) 1.9	G	DH	M	-		08/82 ➧ 09/90	867.819.121 +	**73964**	212 138 42	P/A
TRANSPORTER T3 (79-) 1.9	G	DH	M	-		08/82 ➧ 09/90	867.819.121 +	**73964**	212 138 42	P/A
TRANSPORTER T3 (79-) 1.9	G	GW	M	-		08/82 ➧ 09/90	867.819.121 +	**73964**	212 138 42	P/A
TRANSPORTER T3 (79-) 1.9	G	GW	M	-		08/82 ➧ 09/90	867.819.121 +	**73964**	212 138 42	P/A
TRANSPORTER T3 (79-) 2.1	G	DJ	M	-		08/85 ➧ 09/90	867.819.121 +	**73964**	212 138 42	P/A
TRANSPORTER T3 (79-) 2.1	G	DJ	M	-		08/85 ➧ 09/90	867.819.121 +	**73964**	212 138 42	P/A
TRANSPORTER T3 (79-) 2.1	G	MV	M	-		08/85 ➧ 09/90	867.819.121 +	**73964**	212 138 42	P/A
TRANSPORTER T3 (79-) 2.1	G	MV	M	-		08/85 ➧ 09/90	867.819.121 +	**73964**	212 138 42	P/A
TRANSPORTER T3 (79-) 2.1	G	SS	M	-		08/85 ➧ 09/90	867.819.121 +	**73964**	212 138 42	P/A

HEATERS

	G/D			AC	Note		OE	Nissens	Dim. H W T	Mat.
VOLKSWAGEN LIGHT VAN (../..)										
TRANSPORTER T3 (79-) 2.1	G	SS	M	-		08/85 ➧ 09/90	867.819.121 +	**73964**	212 138 42	P/A
TRANSPORTER T4 (90-) 1.8 i	G	PD	M	-		09/90 ➧ 07/92	701.819.031 A+	**73965**	306 157 42	ALM
TRANSPORTER T4 (90-) 1.8 i	G	PD	M	-		09/90 ➧ 07/92	701.819.032 +	**73974**	231 160 44	P/A
TRANSPORTER T4 (90-) 1.8 i	G	PD	M	-		09/90 ➧ 07/92	729.819.031 +	**73971**	212 138 42	P/A
TRANSPORTER T4 (90-) 1.8 i	G	PD	M	-		09/90 ➧ 07/92	701.819.031 A+	**73965**	306 157 42	ALM
TRANSPORTER T4 (90-) 1.9 D	D	1X	M	-		09/90 ➧ 07/94	701.819.031 A+	**73965**	306 157 42	ALM
TRANSPORTER T4 (90-) 1.9 D	D	1X	M	-		09/90 ➧ 12/95	701.819.031 A+	**73965**	306 157 42	ALM
TRANSPORTER T4 (90-) 1.9 TD	D	ABL	M	+/-		09/96 ➧ 06/03	701.819.031 A+	**73965**	306 157 42	ALM
TRANSPORTER T4 (90-) 1.9 TD	D	ABL	M	+/-		10/92 ➧ 06/03	701.819.031 A+	**73965**	306 157 42	ALM
TRANSPORTER T4 (90-) 2.0 i	G	AAC	M/A	+/-		09/90 ➧ 06/03	701.819.031 A+	**73965**	306 157 42	ALM
TRANSPORTER T4 (90-) 2.0 i	G	AAC	M/A	+/-		09/96 ➧ 06/03	701.819.031 A+	**73965**	306 157 42	ALM
TRANSPORTER T4 (90-) 2.0 i	G	AAC	M	+/-		09/90 ➧ 07/94	701.819.031 A+	**73965**	306 157 42	ALM
TRANSPORTER T4 (90-) 2.4 D	D	AJA	M/A	+/-		04/97 ➧ 06/03	701.819.031 A+	**73965**	306 157 42	ALM
TRANSPORTER T4 (90-) 2.4 D	D	AJA	M/A	+/-		04/97 ➧ 06/03	701.819.031 A+	**73965**	306 157 42	ALM
TRANSPORTER T4 (90-) 2.4 D	D	AAB	M	-		09/90 ➧ 07/94	701.819.031 A+	**73965**	306 157 42	ALM
TRANSPORTER T4 (90-) 2.4 D	D	AAB	M	+/-		09/90 ➧ 04/98	701.819.031 A+	**73965**	306 157 42	ALM
TRANSPORTER T4 (90-) 2.4 D	D	AAB	M	+/-		09/96 ➧ 04/98	701.819.031 A+	**73965**	306 157 42	ALM
TRANSPORTER T4 (90-) 2.5 i	G	ACU	M/A	-		02/94 ➧ 07/94	701.819.031 A+	**73965**	306 157 42	ALM
TRANSPORTER T4 (90-) 2.5 i	G	ACU	M/A	+/-		02/94 ➧ 10/96	701.819.031 A+	**73965**	306 157 42	ALM
TRANSPORTER T4 (90-) 2.5 i	G	AEN	M/A	+/-		05/95 ➧ 12/95	701.819.031 A+	**73965**	306 157 42	ALM
TRANSPORTER T4 (90-) 2.5 i	G	AET	M/A	+/-		08/96 ➧ 06/03	701.819.031 A+	**73965**	306 157 42	ALM
TRANSPORTER T4 (90-) 2.5 i	G	AET	M/A	+/-		08/96 ➧ 06/03	701.819.031 A+	**73965**	306 157 42	ALM
TRANSPORTER T4 (90-) 2.5 i	G	AEU	M/A	+/-		08/96 ➧ 06/03	701.819.031 A+	**73965**	306 157 42	ALM
TRANSPORTER T4 (90-) 2.5 i	G	AEU	M/A	+/-		08/96 ➧ 06/03	701.819.031 A+	**73965**	306 157 42	ALM
TRANSPORTER T4 (90-) 2.5 i	G	APL	M/A	+/-		05/99 ➧ 12/99	701.819.031 A+	**73965**	306 157 42	ALM
TRANSPORTER T4 (90-) 2.5 i	G	APL	M/A	+/-		05/99 ➧ 12/99	701.819.031 A+	**73965**	306 157 42	ALM
TRANSPORTER T4 (90-) 2.5 i	G	AVT	M/A	+/-		12/99 ➧ 06/03	701.819.031 A+	**73965**	306 157 42	ALM
TRANSPORTER T4 (90-) 2.5 i	G	AVT	M/A	+/-		12/99 ➧ 06/03	701.819.031 A+	**73965**	306 157 42	ALM
TRANSPORTER T4 (90-) 2.5 i	G	AAF	M/A	-		09/90 ➧ 12/93	701.819.031 A+	**73965**	306 157 42	ALM
TRANSPORTER T4 (90-) 2.5 i	G	AAF	M/A	+/-		09/90 ➧ 12/93	701.819.031 A+	**73965**	306 157 42	ALM
TRANSPORTER T4 (90-) 2.5 TDi	D	ACV	M	+/-		09/95 ➧ 06/03	701.819.031 A+	**73965**	306 157 42	ALM
TRANSPORTER T4 (90-) 2.5 TDi	D	ACV	M	+/-		09/96 ➧ 06/03	701.819.031 A+	**73965**	306 157 42	ALM
TRANSPORTER T4 (90-) 2.5 TDi	D	ACV	A	+/-		05/98 ➧ 06/03	701.819.031 A+	**73965**	306 157 42	ALM
TRANSPORTER T4 (90-) 2.5 TDi	D	AHY	M	+/-		05/98 ➧ 09/00	701.819.031 A+	**73965**	306 157 42	ALM
TRANSPORTER T4 (90-) 2.5 TDi	D	AHY	M	+/-		05/98 ➧ 09/00	701.819.031 A+	**73965**	306 157 42	ALM
TRANSPORTER T4 (90-) 2.5 TDi	D	AJT	M	+/-		05/98 ➧ 06/03	701.819.031 A+	**73965**	306 157 42	ALM
TRANSPORTER T4 (90-) 2.5 TDi	D	AJT	M	+/-		05/98 ➧ 06/03	701.819.031 A+	**73965**	306 157 42	ALM
TRANSPORTER T4 (90-) 2.5 TDi	D	AUF	A	+/-		11/99 ➧ 06/03	701.819.031 A+	**73965**	306 157 42	ALM
TRANSPORTER T4 (90-) 2.5 TDi	D	AUF	A	+/-		11/99 ➧ 06/03	701.819.031 A+	**73965**	306 157 42	ALM
TRANSPORTER T4 (90-) 2.5 TDi	D	AXG	M	+/-		09/00 ➧ 06/03	701.819.031 A+	**73965**	306 157 42	ALM
TRANSPORTER T4 (90-) 2.5 TDi	D	AXG	M	+/-		09/00 ➧ 06/03	701.819.031 A+	**73965**	306 157 42	ALM
TRANSPORTER T4 (90-) 2.5 TDi	D	AYC	M/A	+/-		04/01 ➧ 06/03	701.819.031 A+	**73965**	306 157 42	ALM
TRANSPORTER T4 (90-) 2.5 TDi	D	AYC	M/A	+/-		04/01 ➧ 06/03	701.819.031 A+	**73965**	306 157 42	ALM
TRANSPORTER T4 (90-) 2.5 TDi	D	AYY	M	+/-		10/01 ➧ 06/03	701.819.031 A+	**73965**	306 157 42	ALM
TRANSPORTER T4 (90-) 2.5 TDi	D	AYY	M	+/-		10/01 ➧ 06/03	701.819.031 A+	**73965**	306 157 42	ALM
TRANSPORTER T4 (90-) 2.8 i V6	G	AMV	A	+/-		05/00 ➧ 06/03	701.819.031 A+	**73965**	306 157 42	ALM
TRANSPORTER T4 (90-) 2.8 i V6	G	AMV	A	+/-		05/00 ➧ 06/03	701.819.031 A+	**73965**	306 157 42	ALM
TRANSPORTER T4 (90-) 2.8 i VR6	G	AES	M/A	+/-		01/96 ➧ 05/00	701.819.031 A+	**73965**	306 157 42	ALM

FAN ASSEMBLY

	G/D			AC	Note		OE		Nissens	Dim. H	W	T	Mat.
CHEVROLET LIGHT VAN													
LUMINA APV (97-) 3.4	G		A	+/-		01/98 ➧ 12/99	12362508	+	**85408**	0	0	0	X
LUMINA APV (97-) 3.4	G		A	+/-		01/00 ➧ 12/00	12362508	+	**85408**	0	0	0	X
LUMINA APV (97-) 3.4	G		A	+/-		01/01 ➧	10312887	+	**85409**	0	0	0	X
MONTANA (97-) 3.4	G		A	+/-		01/98 ➧ 12/99	12362508	+	**85408**	0	0	0	X
MONTANA (97-) 3.4	G		A	+/-		01/00 ➧ 12/00	12362508	+	**85408**	0	0	0	X
MONTANA (97-) 3.4	G		A	+/-		01/01 ➧	10312887	+	**85409**	0	0	0	X
TRANS SPORT (97-) 3.4	G		A	+/-		01/98 ➧ 12/99	12362508	+	**85408**	0	0	0	X
TRANS SPORT (97-) 3.4	G		A	+/-		01/00 ➧ 12/00	12362508	+	**85408**	0	0	0	X
TRANS SPORT (97-) 3.4	G		A	+/-		01/01 ➧	10312887	+	**85409**	0	0	0	X
VENTURE (97-) 3.4	G		A	+/-		01/98 ➧ 12/99	12362508	+	**85408**	0	0	0	X
VENTURE (97-) 3.4	G		A	+/-		01/00 ➧ 12/00	12362508	+	**85408**	0	0	0	X
VENTURE (97-) 3.4	G		A	+/-		01/01 ➧	10312887	+	**85409**	0	0	0	X
CITROEN LIGHT VAN													
BERLINGO (96-) 1.1 i	G	TU1M	M	-	ECIA	07/96 ➧ 09/98	1253.51	+	**85317**	0	0	0	X
BERLINGO (96-) 1.1 i	G	TU1M	M	-	ECIA	10/98 ➧	1253.51	+	**85317**	0	0	0	X
BERLINGO (96-) 1.1 i	G	TU1M	M	+	+AC	07/96 ➧	1253.87	+	**85084**	0	0	0	X
BERLINGO (96-) 1.4 i	G	TU3JP	M	+/-	+AC	07/96 ➧ 09/98	1253.87	+	**85084**	0	0	0	X
BERLINGO (96-) 1.4 i	G	TU3JP	M	+/-	-AC	07/96 ➧ 09/98	1253.63	+	**85318**	0	0	0	X
BERLINGO (96-) 1.4 i	G	TU3JP	M	+/-	+AC	10/98 ➧	1253.87	+	**85084**	0	0	0	X
BERLINGO (96-) 1.6 i	G	TU5JP	M	+/-	+AC	07/96 ➧	1253.87	+	**85084**	0	0	0	X
BERLINGO (96-) 1.6 i 16V	G	TU5JP4	M	+/-	+AC	10/98 ➧	1253.87	+	**85084**	0	0	0	X
BERLINGO (96-) 1.8 D	D	XUD7	M	-		06/96 ➧ 10/98	1250.E9	+	**85074**	0	0	0	X
BERLINGO (96-) 1.8 D	D	XUD7	M	-		11/98 ➧	1250.E9	+	**85074**	0	0	0	X
BERLINGO (96-) 1.8 D	D	XUD7	M	+		06/96 ➧ 10/98	1250.F1	+	**85083**	0	0	0	X
BERLINGO (96-) 1.8 D	D	XUD7	M	+	+AC	10/98 ➧	1250.F1	+	**85083**	0	0	0	X
BERLINGO (96-) 1.8 i	G	XU7JB	M	+/-	+AC	07/97 ➧ 09/98	1253.87	+	**85084**	0	0	0	X
BERLINGO (96-) 1.8 i	G	XU7JB	M	+/-	+AC	10/98 ➧	1253.87	+	**85084**	0	0	0	X
BERLINGO (96-) 1.9 D	D	XUD9,DW8, DW8B	M	-		06/96 ➧ 10/98	1250.E9	+	**85074**	0	0	0	X
BERLINGO (96-) 1.9 D	D	XUD9,DW8, DW8B	M	-		11/98 ➧	1250.E9	+	**85074**	0	0	0	X
BERLINGO (96-) 1.9 D	D	XUD9,DW8, DW8B	M	+		06/96 ➧ 10/98	1250.F1	+	**85083**	0	0	0	X
BERLINGO (96-) 1.9 D	D	XUD9,DW8, DW8B	M	+	+AC	11/98 ➧	1250.F1	+	**85083**	0	0	0	X
BERLINGO (96-) 2.0 HDi	D	DW10TD	M	+/-	+AC	10/99 ➧	1250.F1	+	**85083**	0	0	0	X
BERLINGO (02-) 1.1 i	G	TU1JP	M	+/-	1 Speed	12/02 ➧	1253.A7	+	**85316**	0	0	0	X
BERLINGO (02-) 1.1 i	G	TU1JP	M	+/-	1 Speed	12/02 ➧	1253.A7	+	**85316**	0	0	0	X
BERLINGO (02-) 1.4 i	G	TU3JP	M	+/-	1 Speed	12/02 ➧	1253.A7	+	**85316**	0	0	0	X
BERLINGO (02-) 1.4 i	G	TU3JP	M	+/-	1 Speed	12/02 ➧	1253.A7	+	**85316**	0	0	0	X
BERLINGO (02-) 1.6 i 16V	G	TU5JP4	M	+/-	1 Speed	12/02 ➧	1253.A7	+	**85316**	0	0	0	X
BERLINGO (02-) 1.6 i 16V	G	TU5JP4	M	+/-	1 Speed	12/02 ➧	1253.A7	+	**85316**	0	0	0	X
DISPATCH (95-) 1.6 i	G	SPI	M	+		10/95 ➧	1253.41	+	**85004**	0	0	0	X
DISPATCH (95-) 1.9 D	D	DW8	M	-		10/95 ➧	1253.41	+	**85004**	0	0	0	X
DISPATCH (95-) 1.9 D	D	DW8	M	+		10/95 ➧	1253.42	+	**85006**	0	0	0	X
DISPATCH (95-) 1.9 D	D	XUD9A	M	-		10/95 ➧	1253.41	+	**85004**	0	0	0	X
DISPATCH (95-) 1.9 D	D	XUD9A	M	+		10/95 ➧	1253.42	+	**85006**	0	0	0	X
DISPATCH (95-) 2.0 HDi	D	DW10ATED	M	+/-		02/00 ➧	1253.42	+	**85006**	0	0	0	X
JUMPER (94-) 1.9 D	D	XUD9AU	M	+/-	-AC	02/94 ➧ 01/02	1305559080	+	**85020**	0	0	0	X
JUMPER (94-) 1.9 TD	D	XUD9UTF	M	+/-	-AC	02/94 ➧ 01/02	1305559080	+	**85020**	0	0	0	X
JUMPER (94-) 2.5 D	D	DJ5	M	-		02/94 ➧ 01/02	1305559080	+	**85020**	0	0	0	X
JUMPER (94-) 2.5 TD	D	DJ5T	M	-		02/94 ➧ 01/02	1305559080	+	**85020**	0	0	0	X

FAN ASSEMBLY

	G/D			AC	Note		OE	Nissens	Dim. H	Dim. W	Dim. T	Mat.
CITROEN LIGHT VAN (../..)												
JUMPER (94-) 2.8 D	D	SOFIM	M	+/-	-AC	02/94 ➧ 01/02	1305559080 +	**85020**	0	0	0	X
JUMPER (94-) 2.8 HDi	D	8140-43/63	M	+/-	-AC	02/94 ➧ 01/02	1305559080 +	**85020**	0	0	0	X
JUMPER (94-) 2.8 TD	D	8140-43/63	M	+/-	-AC	02/94 ➧ 01/02	1305559080 +	**85020**	0	0	0	X
JUMPER (02-) 2.0 HDi	D	DW10JTD	M	-		01/02 ➧	1305559080 +	**85020**	0	0	0	X
JUMPER (02-) 2.0 HDi	D	DW10JTD	M	+		01/02 ➧	1305559080 +	**85020**	0	0	0	X
JUMPER (02-) 2.0 i	G	XU10J2	M	+/-	+AC	01/02 ➧	1305199080 +	**85021**	0	0	0	X
JUMPER (02-) 2.2 HDi	D	DW12TED4	M	-		01/02 ➧	1305559080 +	**85020**	0	0	0	X
JUMPER (02-) 2.2 HDi	D	DW12TED4	M	+		01/02 ➧	1305559080 +	**85020**	0	0	0	X
JUMPER (02-) 2.8 HDi	D	F28TDCR	M	-		01/02 ➧	1305559080 +	**85020**	0	0	0	X
JUMPER (02-) 2.8 HDi	D	F28TDCR	M	+		01/02 ➧	1305559080 +	**85020**	0	0	0	X
JUMPY (95-) 1.6 i	G	SPI	M	+		10/95 ➧	1253.41 +	**85004**	0	0	0	X
JUMPY (95-) 1.9 D	D	DW8	M	-		10/95 ➧	1253.41 +	**85004**	0	0	0	X
JUMPY (95-) 1.9 D	D	DW8	M	+		10/95 ➧	1253.42 +	**85006**	0	0	0	X
JUMPY (95-) 1.9 D	D	XUD9A	M	-		10/95 ➧	1253.41 +	**85004**	0	0	0	X
JUMPY (95-) 1.9 D	D	XUD9A	M	+		10/95 ➧	1253.42 +	**85006**	0	0	0	X
JUMPY (95-) 2.0 HDi	D	DW10ATED	M	+/-		02/00 ➧	1253.42 +	**85006**	0	0	0	X
RELAY (02-) 2.0 HDi	D	DW10JTD	M	-		01/02 ➧	1305559080 +	**85020**	0	0	0	X
RELAY (02-) 2.0 HDi	D	DW10JTD	M	+		01/02 ➧	1305559080 +	**85020**	0	0	0	X
RELAY (02-) 2.0 i	G	XU10J2	M	+/-	+AC	01/02 ➧	1305199080 +	**85021**	0	0	0	X
RELAY (02-) 2.2 HDi	D	DW12TED4	M	-		01/02 ➧	1305559080 +	**85020**	0	0	0	X
RELAY (02-) 2.2 HDi	D	DW12TED4	M	+		01/02 ➧	1305559080 +	**85020**	0	0	0	X
RELAY (02-) 2.8 HDi	D	F28TDCR	M	-		01/02 ➧	1305559080 +	**85020**	0	0	0	X
RELAY (02-) 2.8 HDi	D	F28TDCR	M	+		01/02 ➧	1305559080 +	**85020**	0	0	0	X
RELAY (94-) 1.9 D	D	XUD9AU	M	+/-	-AC	02/94 ➧ 01/02	1305559080 +	**85020**	0	0	0	X
RELAY (94-) 1.9 TD	D	XUD9UTF	M	+/-	-AC	02/94 ➧ 01/02	1305559080 +	**85020**	0	0	0	X
RELAY (94-) 2.5 D	D	DJ5	M	-		02/94 ➧ 01/02	1305559080 +	**85020**	0	0	0	X
RELAY (94-) 2.5 TD	D	DJ5T	M	-		02/94 ➧ 01/02	1305559080 +	**85020**	0	0	0	X
RELAY (94-) 2.8 D	D	2798	M	+/-	-AC	02/94 ➧ 01/02	1305559080 +	**85020**	0	0	0	X
RELAY (94-) 2.8 HDi	D	8140-43/63	M	+/-	-AC	02/94 ➧ 01/02	1305559080 +	**85020**	0	0	0	X
RELAY (94-) 2.8 TD	D	8140-43/63	M	+/-	-AC	02/94 ➧ 01/02	1305559080 +	**85020**	0	0	0	X
FIAT LIGHT VAN												
DOBLO (01-) 1.2 i	G	223 A5.000	M	-		03/01 ➧	46737731	**85127**	0	0	0	X
DOBLO (01-) 1.2 i	G	223 A5.000	M	+		03/01 ➧	46737732 +	**85128**	0	0	0	X
DOBLO (01-) 1.3 JTD	D	188 A9.000	M	-		01/03 ➧	51718487 +	**85131**	0	0	0	X
DOBLO (01-) 1.3 JTD	D	188 A9.000	M	+		01/03 ➧	51718489 +	**85130**	0	0	0	X
DOBLO (01-) 1.6 i 16V	G	182 B6.000	M	+		10/01 ➧ 05/05	46786099 +	**85133**	0	0	0	X
DOBLO (01-) 1.9 D	D	223 A6.000	M	-		03/01 ➧	46737733	**85126**	0	0	0	X
DOBLO (01-) 1.9 D	D	223 A6.000	M	+		03/01 ➧	46767294 +	**85129**	0	0	0	X
DOBLO (01-) 1.9 JTD	D	182 B9.000	M	-		10/01 ➧	51718487 +	**85131**	0	0	0	X
DOBLO (01-) 1.9 JTD	D	182 B9.000	M	+		10/01 ➧	51718489 +	**85130**	0	0	0	X
DUCATO (94-) 1.9 D	D	D9B	M	+/-	-AC	02/94 ➧ 01/02	1305559080 +	**85020**	0	0	0	X
DUCATO (94-) 1.9 TD	D	XUD9TF	M	-		02/94 ➧ 01/02	1305559080 +	**85020**	0	0	0	X
DUCATO (94-) 2.0 JTD	D	DW10TD	M	-	-AC	02/94 ➧ 01/02	1305559080 +	**85020**	0	0	0	X
DUCATO (94-) 2.5 D	D	8140.67	M	-		02/94 ➧ 08/98	1305559080 +	**85020**	0	0	0	X
DUCATO (94-) 2.5 JTD	D	8140.47	M	-	-AC	02/94 ➧ 01/02	1305559080 +	**85020**	0	0	0	X
DUCATO (94-) 2.5 TD	D	8140.47	M	-	-AC	02/94 ➧ 01/02	1305559080 +	**85020**	0	0	0	X
DUCATO (94-) 2.8 D	D	8140.63	M	+/-	-AC	02/94 ➧ 01/02	1305559080 +	**85020**	0	0	0	X
DUCATO (94-) 2.8 JTD	D	8140.43S	M	+/-	-AC	02/94 ➧ 11/01	1305559080 +	**85020**	0	0	0	X
DUCATO (94-) 2.8 TD	D	8140.43	M	+/-	-AC	02/94 ➧ 11/01	1305559080 +	**85020**	0	0	0	X

FAN ASSEMBLY

	G/D			AC	Note		OE	Nissens	Dim. H	Dim. W	Dim. T	Mat.
FIAT LIGHT VAN (../..)												
DUCATO (02-) 2.0 i	G	RFL	M	+/-	+AC	01/02 ➧	1305199080 +	**85021**	0	0	0	X
DUCATO (02-) 2.0 i	G	RFL	M	+/-	-AC	01/02 ➧	1305559080 +	**85020**	0	0	0	X
DUCATO (02-) 2.0 JTD	D	DW10TD	M	-		01/02 ➧	1305559080 +	**85020**	0	0	0	X
DUCATO (02-) 2.0 JTD	D	DW10TD	M	+		01/02 ➧	1305559080 +	**85020**	0	0	0	X
DUCATO (02-) 2.2 JTD	D	2179 DW12TED	M	-		01/02 ➧	1305559080 +	**85020**	0	0	0	X
DUCATO (02-) 2.2 JTD	D	2179 DW12TED	M	+		01/02 ➧	1305559080 +	**85020**	0	0	0	X
DUCATO (02-) 2.3 JTD	D	F1AE0481C	M	-		01/02 ➧	1305559080 +	**85020**	0	0	0	X
DUCATO (02-) 2.3 JTD	D	F1AE0481C	M	+		01/02 ➧	1305559080 +	**85020**	0	0	0	X
DUCATO (02-) 2.8 JTD	D	8140.43S	M	-		01/02 ➧	1305559080 +	**85020**	0	0	0	X
DUCATO (02-) 2.8 JTD	D	8140.43S	M	+		01/02 ➧	1305559080 +	**85020**	0	0	0	X
FIORINO (04-) 1.2 i	G		M	+/-		09/04 ➧	46777298 +	**85433**	0	0	0	X
SCUDO (96-) 1.6 i	G	220 A2.000	M	-		07/95 ➧	1253.45 +	**85003**	0	0	0	X
SCUDO (96-) 1.6 i	G	220 A2.000	M	+		07/95 ➧	1253.41 +	**85004**	0	0	0	X
SCUDO (96-) 1.9 D	D	D9B	M	-		07/95 ➧	1253.41 +	**85004**	0	0	0	X
SCUDO (96-) 1.9 D	D	D9B	M	+		07/95 ➧	1253.41 +	**85004**	0	0	0	X
SCUDO (96-) 1.9 TD	D	D8B	M	+/-		07/95 ➧	1253.42 +	**85006**	0	0	0	X
SCUDO (96-) 2.0 i 16V	G	RFN	M	-		07/95 ➧	1253.45 +	**85003**	0	0	0	X
SCUDO (96-) 2.0 i 16V	G	RFN	M	+		07/95 ➧	1253.41 +	**85004**	0	0	0	X
SCUDO (96-) 2.0 JTD	D	RHX	M	+/-		02/00 ➧	1253.42 +	**85006**	0	0	0	X
SCUDO (96-) 2.0 JTD	D	RHZ	M	+/-		02/00 ➧	1253.42 +	**85006**	0	0	0	X
FORD LIGHT VAN												
MAVERICK (02-) 2.0 i 16V	G		M/A	+/-		09/02 ➧	YF10-15-025H+	**85277**	0	0	0	X
MAVERICK (02-) 2.3 i 16V	G		M/A	+/-		09/02 ➧	YF10-15-025H+	**85277**	0	0	0	X
MAVERICK (02-) 3.0 i V6 24V	G		M/A	+/-		09/02 ➧	AJ05-15-025F+	**85278**	0	0	0	X
TRANSIT (94-) 2.0 EFi	G		M	-		08/94 ➧	7045704 +	**85488**	0	0	0	X
TRANSIT (94-) 2.5 D	D		M	+		08/94 ➧	1013004 +	**85425**	0	0	0	X
TRANSIT (94-) 2.5 TD	D		M	+		08/94 ➧	1013004 +	**85425**	0	0	0	X
TRANSIT (94-) 2.5 TD	D		A	+		08/94 ➧	1013004 +	**85425**	0	0	0	X
TRANSIT (94-) 2.5 TDi	D		M	+		08/94 ➧	1013004 +	**85425**	0	0	0	X
TRANSIT (00-) 2.3 i 16V	G		M	+/-	-AC	01/00 ➧	1C15 8C607 CD+	**85426**	0	0	0	X
TRANSIT CONNECT (02-) 1.8 Di	D		M	-	-AC	05/02 ➧	2T148C607AD+	**85261**	0	0	0	X
TRANSIT CONNECT (02-) 1.8 Di	D		M	-		08/02 ➧	2T148C607AD+	**85261**	0	0	0	X
TRANSIT CONNECT (02-) 1.8 Di	D		M	+	+AC	05/02 ➧	2T148C607EC+	**85263**	0	0	0	X
TRANSIT CONNECT (02-) 1.8 Di	D		M	+	+AC	05/02 ➧	2T148C607GA+	**85264**	0	0	0	X
TRANSIT CONNECT (02-) 1.8 Di	D		M	+	+AC	08/02 ➧	2T148C607BC+	**85262**	0	0	0	X
TRANSIT CONNECT (02-) 1.8 i 16V	G		M	-		05/02 ➧	2T148C607AD+	**85261**	0	0	0	X
TRANSIT CONNECT (02-) 1.8 i 16V	G		M	+	+AC	05/02 ➧	2T148C607EC+	**85263**	0	0	0	X
TRANSIT CONNECT (02-) 1.8 TDCi	D		M	+	+AC	08/02 ➧	2T148C607EC+	**85263**	0	0	0	X
TRANSIT CONNECT (02-) 1.8 TDCi	D		M	+	+AC	08/02 ➧	2T148C607BC+	**85262**	0	0	0	X
MAZDA LIGHT VAN												
TRIBUTE (02-) 2.0 i 16V	G		M/A	+/-		09/02 ➧	YF10-15-025H+	**85277**	0	0	0	X
TRIBUTE (02-) 2.3 i 16V	G		M/A	+/-		09/02 ➧	YF10-15-025H+	**85277**	0	0	0	X
TRIBUTE (02-) 3.0 i V6 24V	G		M/A	+/-		09/02 ➧	AJ05-15-025F+	**85278**	0	0	0	X
MERCEDES LIGHT VAN												
VANEO (02-) 1.6	G	M166.961	M/A	+/-		02/02 ➧	168 500 02 93	**85078**	0	0	0	X
VANEO (02-) 1.7 CDI	D	OM668.914	M/A	+/-		02/02 ➧	168 500 02 93	**85078**	0	0	0	X
VANEO (02-) 1.9	G	M166.991	M/A	+/-		02/02 ➧	168 500 02 93	**85078**	0	0	0	X

FAN ASSEMBLY

	G/D			AC	Note		OE	Nissens	Dim. H	Dim. W	Dim. T	Mat.
MERCEDES LIGHT VAN (../..)												
VITO W 638 (96-) 108 CDI	D	OM611.940	M	-	AC Fan	03/99 ▸	638 500 11 93	**85403**	0	0	0	X
VITO W 638 (96-) 108 CDI	D	OM611.940	M	-	AC Fan	03/99 ▸	638 500 11 93	**85403**	0	0	0	X
VITO W 638 (96-) 108 CDI	D	OM611.940	M	+	AC Fan	03/99 ▸	638 500 11 93	**85403**	0	0	0	X
VITO W 638 (96-) 108 CDI	D	OM611.940	A	+	AC Fan	03/99 ▸	638 500 11 93	**85403**	0	0	0	X
VITO W 638 (96-) 108 D	D	OM601.942	M/A	-	AC Fan	02/96 ▸ 03/99	638 500 11 93	**85403**	0	0	0	X
VITO W 638 (96-) 108 D	D	OM601.942	M/A	+	AC Fan	02/96 ▸ 03/99	638 500 11 93	**85403**	0	0	0	X
VITO W 638 (96-) 108 D	D	OM601.942	M	-	AC Fan	02/96 ▸ 03/99	638 500 11 93	**85403**	0	0	0	X
VITO W 638 (96-) 110 CDI	D	OM611.980	M	-	AC Fan	03/99 ▸	638 500 11 93	**85403**	0	0	0	X
VITO W 638 (96-) 110 CDI	D	OM611.980	M	-	AC Fan	03/99 ▸	638 500 11 93	**85403**	0	0	0	X
VITO W 638 (96-) 110 CDI	D	OM611.980	M	+	AC Fan	03/99 ▸	638 500 11 93	**85403**	0	0	0	X
VITO W 638 (96-) 110 CDI	D	OM611.980	A	+	AC Fan	03/99 ▸	638 500 11 93	**85403**	0	0	0	X
VITO W 638 (96-) 110 TD	D	OM601.970	M/A	-	AC Fan	02/96 ▸ 03/99	638 500 11 93	**85403**	0	0	0	X
VITO W 638 (96-) 110 TD	D	OM601.970	M/A	+	AC Fan	02/96 ▸ 03/99	638 500 11 93	**85403**	0	0	0	X
VITO W 638 (96-) 110 TD	D	OM601.970	M	-	AC Fan	02/96 ▸ 03/99	638 500 11 93	**85403**	0	0	0	X
VITO W 638 (96-) 112 CDI	D	OM611.960	M	-	AC Fan	03/99 ▸	638 500 11 93	**85403**	0	0	0	X
VITO W 638 (96-) 112 CDI	D	OM611.960	M	-	AC Fan	03/99 ▸	638 500 11 93	**85403**	0	0	0	X
VITO W 638 (96-) 112 CDI	D	OM611.960	M	+	AC Fan	03/99 ▸	638 500 11 93	**85403**	0	0	0	X
VITO W 638 (96-) 112 CDI	D	OM611.960	A	+	AC Fan	03/99 ▸	638 500 11 93	**85403**	0	0	0	X
VITO W 638 (96-) 113	G	M111.948	M/A	-	AC Fan	02/96 ▸ 03/99	638 500 11 93	**85403**	0	0	0	X
VITO W 638 (96-) 113	G	M111.948	M/A	+	AC Fan	02/96 ▸ 03/99	638 500 11 93	**85403**	0	0	0	X
VITO W 638 (96-) 113	G	M111.948	M	-	AC Fan	02/96 ▸ 03/99	638 500 11 93	**85403**	0	0	0	X
VITO W 638 (96-) 113	G	M111.948	M	-	AC Fan	03/99 ▸ 07/03	638 500 11 93	**85403**	0	0	0	X
VITO W 638 (96-) 113	G	M111.948	M	+	AC Fan	03/99 ▸ 07/03	638 500 11 93	**85403**	0	0	0	X
VITO W 638 (96-) 113	G	M111.948	A	+/-	AC Fan	03/99 ▸ 07/03	638 500 11 93	**85403**	0	0	0	X
VITO W 638 (96-) 114	G	M111.978	M/A	-	AC Fan	02/96 ▸ 03/99	638 500 11 93	**85403**	0	0	0	X
VITO W 638 (96-) 114	G	M111.978	M/A	+	AC Fan	02/96 ▸ 03/99	638 500 11 93	**85403**	0	0	0	X
VITO W 638 (96-) 114	G	M111.978	M	-	AC Fan	02/96 ▸ 03/99	638 500 11 93	**85403**	0	0	0	X
VITO W 638 (96-) 114	G	M111.978	M	-	AC Fan	03/99 ▸ 07/03	638 500 11 93	**85403**	0	0	0	X
VITO W 638 (96-) 114	G	M111.978	M	+	AC Fan	03/99 ▸ 07/03	638 500 11 93	**85403**	0	0	0	X
VITO W 638 (96-) 114	G	M111.978	A	+/-	AC Fan	03/99 ▸ 07/03	638 500 11 93	**85403**	0	0	0	X
MITSUBISHI LIGHT VAN												
MONTERO (00-) 2.5 TD	D	4D56TDI	M/A	+/-	AC Fan	02/00 ▸ 06/01	MR360801	**85383**	0	0	0	X
MONTERO (00-) 2.5 TD	D	4D56TDI	M/A	+/-	AC Fan	07/01 ▸	MR360801	**85383**	0	0	0	X
MONTERO (00-) 3.2 DI-D	D	4M41	M	+/-	AC Fan	02/00 ▸	MR360801	**85383**	0	0	0	X
MONTERO (00-) 3.2 DI-D	D	4M41	A	+/-	AC Fan	02/00 ▸	MR360801	**85383**	0	0	0	X
MONTERO (00-) 3.5 i V6 24V	G	6G74	M/A	+/-	AC Fan	02/00 ▸ 09/02	MR360801	**85383**	0	0	0	X
MONTERO (00-) 3.5 i V6 24V	G	6G74	M/A	+/-	AC Fan	10/02 ▸	MR360801	**85383**	0	0	0	X
MONTERO SPORT (98-) 2.5 TD	D	4D56T	M/A	+/-	AC Fan	11/98 ▸	MR513487	**85384**	0	0	0	X
MONTERO SPORT (98-) 3.0 i V6 24V	G	6G72	M/A	+/-	AC Fan	11/98 ▸	MR513487	**85384**	0	0	0	X
OUTLANDER (03-) 2.0 i TURBO	G	4G63	M/A	+/-		05/03 ▸	MR312899 +	**85276**	0	0	0	X
OUTLANDER (03-) 2.4 i 16V	G	4G64	M/A	+/-		05/03 ▸	MR312899 +	**85276**	0	0	0	X
PAJERO (00-) 2.5 TD	D	4D56TDI	M/A	+/-	AC Fan	02/00 ▸ 06/01	MR360801	**85383**	0	0	0	X
PAJERO (00-) 2.5 TD	D	4D56TDI	M/A	+/-	AC Fan	07/01 ▸	MR360801	**85383**	0	0	0	X
PAJERO (00-) 3.2 DI-D	D	4M41	M	+/-	AC Fan	02/00 ▸	MR360801	**85383**	0	0	0	X
PAJERO (00-) 3.2 DI-D	D	4M41	A	+/-	AC Fan	02/00 ▸	MR360801	**85383**	0	0	0	X
PAJERO (00-) 3.5 i V6 24V	G	6G74	M/A	+/-	AC Fan	02/00 ▸ 09/02	MR360801	**85383**	0	0	0	X
PAJERO (00-) 3.5 i V6 24V	G	6G74	M/A	+/-	AC Fan	10/02 ▸	MR360801	**85383**	0	0	0	X
PAJERO SPORT (98-) 2.5 TD	D	4D56T	M/A	+/-	AC Fan	11/98 ▸	MR513487	**85384**	0	0	0	X
PAJERO SPORT (98-) 3.0 i V6 24V	G	6G72	M/A	+/-	AC Fan	11/98 ▸	MR513487	**85384**	0	0	0	X

FAN ASSEMBLY

	G/D			AC	Note		OE	Nissens	Dim. H	Dim. W	Dim. T	Mat.
MITSUBISHI LIGHT VAN (../..)												
SHOGUN (00-) 2.5 TD	D	4D56TDI	M/A	+/-	AC Fan	02/00 ➧ 06/01	MR360801	**85383**	0	0	0	X
SHOGUN (00-) 2.5 TD	D	4D56TDI	M/A	+/-	AC Fan	07/01 ➧	MR360801	**85383**	0	0	0	X
SHOGUN (00-) 3.2 DI-D	D	4M41	M	+/-	AC Fan	02/00 ➧	MR360801	**85383**	0	0	0	X
SHOGUN (00-) 3.2 DI-D	D	4M41	A	+/-	AC Fan	02/00 ➧	MR360801	**85383**	0	0	0	X
SHOGUN (00-) 3.5 i V6 24V	G	6G74	M/A	+/-	AC Fan	02/00 ➧ 09/02	MR360801	**85383**	0	0	0	X
SHOGUN (00-) 3.5 i V6 24V	G	6G74	M/A	+/-	AC Fan	10/02 ➧	MR360801	**85383**	0	0	0	X
NISSAN LIGHT VAN												
INTERSTAR (02-) 1.9 dCi	D	F9Q	M	-		02/02 ➧ 11/03		**85244**	0	0	0	X
INTERSTAR (02-) 1.9 dCi	D	F9Q	M	-		11/03 ➧		**85244**	0	0	0	X
INTERSTAR (02-) 1.9 dCi	D	F9Q	M	+		01/03 ➧ 11/03		**85245**	0	0	0	X
INTERSTAR (02-) 1.9 dCi	D	F9Q	M	+		02/02 ➧ 01/03		**85245**	0	0	0	X
INTERSTAR (02-) 1.9 dCi	D	F9Q	M	+		11/03 ➧		**85245**	0	0	0	X
INTERSTAR (02-) 2.2 dCi	D	G9T	M	-		02/02 ➧ 11/03		**85244**	0	0	0	X
INTERSTAR (02-) 2.2 dCi	D	G9T	M	-		11/03 ➧		**85244**	0	0	0	X
INTERSTAR (02-) 2.2 dCi	D	G9T	M	+		01/03 ➧ 11/03		**85245**	0	0	0	X
INTERSTAR (02-) 2.2 dCi	D	G9T	M	+		02/02 ➧ 01/03		**85245**	0	0	0	X
INTERSTAR (02-) 2.2 dCi	D	G9T	M	+		11/03 ➧		**85245**	0	0	0	X
INTERSTAR (02-) 2.5 dCi	D	G9U	M	-		02/02 ➧ 11/03		**85244**	0	0	0	X
INTERSTAR (02-) 2.5 dCi	D	G9U	M	-		11/03 ➧		**85244**	0	0	0	X
INTERSTAR (02-) 2.5 dCi	D	G9U	M	+		01/03 ➧ 11/03		**85245**	0	0	0	X
INTERSTAR (02-) 2.5 dCi	D	G9U	M	+		02/02 ➧ 01/03		**85245**	0	0	0	X
INTERSTAR (02-) 2.5 dCi	D	G9U	M	+		11/03 ➧		**85245**	0	0	0	X
INTERSTAR (02-) 3.0 dCi	D	ZD30	M	+/-	+AC	07/03 ➧	+	**85245**	0	0	0	X
KUBISTAR (03-) 1.2 i	G	D7F	M	-		08/03 ➧	77 01 045 216+	**85253**	0	0	0	X
KUBISTAR (03-) 1.9 D	D	F8Q	M	-		08/03 ➧	77 01 045 216+	**85253**	0	0	0	X
VANETTE CARGO (95-) 1.6 i 16V	G	G16DE	M	+/-		06/96 ➧	21481-8C300+	**85480**	0	0	0	X
VANETTE CARGO (95-) 2.0 i 16V	G	SR20DE	M	+/-		06/96 ➧	21481-8C300+	**85480**	0	0	0	X
VANETTE CARGO (95-) 2.3 D	D	LD23	M	+/-		01/95 ➧	21481-7C000+	**85479**	0	0	0	X
VANETTE CARGO (95-) 2.3 D	D	LD23	M	+/-		01/95 ➧	21481-7C000+	**85479**	0	0	0	X
VANETTE CARGO (95-) 2.3 D	D	LD23	M	+/-		06/96 ➧	21481-7C000+	**85479**	0	0	0	X
VANETTE CARGO (95-) 2.3 D	D	LD23	M	+/-		09/94 ➧ 06/96	21481-7C000+	**85479**	0	0	0	X
X-TRAIL T30 (01-) 2.0 i 16V	G	QR20DE	M	+/-		07/01 ➧	21481-8H303+	**85279**	0	0	0	X
X-TRAIL T30 (01-) 2.0 i 16V	G	QR20DE	A	+/-		07/01 ➧	21481-8H303+	**85279**	0	0	0	X
X-TRAIL T30 (01-) 2.5 i V6 24V	G	QR25DE	M	+/-		01/03 ➧	21481-8H303+	**85279**	0	0	0	X
X-TRAIL T30 (01-) 2.5 i V6 24V	G	QR25DE	A	+/-		01/03 ➧	21481-8H303+	**85279**	0	0	0	X
OLDSMOBILE LIGHT VAN												
SILHOUETTE (97-) 3.4	G		A	+/-		01/98 ➧ 12/99	12362508 +	**85408**	0	0	0	X
SILHOUETTE (97-) 3.4	G		A	+/-		01/00 ➧ 12/00	12362508 +	**85408**	0	0	0	X
SILHOUETTE (97-) 3.4	G		A	+/-		01/01 ➧	10312887 +	**85409**	0	0	0	X
OPEL LIGHT VAN												
ARENA (98-) 1.9 dCi	D	F9Q	M	-		01/98 ➧ 11/03	4402604 +	**85244**	0	0	0	X
ARENA (98-) 1.9 dCi	D	F9Q	M	-		11/03 ➧	4402604 +	**85244**	0	0	0	X
ARENA (98-) 1.9 dCi	D	F9Q	M	+		01/98 ➧ 06/01	4402604 +	**85245**	0	0	0	X
ARENA (98-) 1.9 dCi	D	F9Q	M	+		01/03 ➧ 11/03	4402604 +	**85245**	0	0	0	X
ARENA (98-) 1.9 dCi	D	F9Q	M	+		11/03 ➧	4402604 +	**85245**	0	0	0	X
ARENA (98-) 2.2 dCi	D	G9T	M	-		01/98 ➧ 11/03	4402604 +	**85244**	0	0	0	X
ARENA (98-) 2.2 dCi	D	G9T	M	-		11/03 ➧	4402604 +	**85244**	0	0	0	X

FAN ASSEMBLY

	G/D			AC	Note		OE		Nissens	Dim. H	W	T	Mat.
OPEL LIGHT VAN (../..)													
ARENA (98-) 2.2 dCi	D	G9T	M	+		01/98 ➧ 06/01	4402604	+	**85245**	0	0	0	X
ARENA (98-) 2.2 dCi	D	G9T	M	+		01/03 ➧ 11/03	4402604	+	**85245**	0	0	0	X
ARENA (98-) 2.2 dCi	D	G9T	M	+		11/03 ➧	4402604	+	**85245**	0	0	0	X
ARENA (98-) 2.2 dTi	D	G9T	M	-		01/98 ➧ 11/03	4402604	+	**85244**	0	0	0	X
ARENA (98-) 2.2 dTi	D	G9T	M	+		01/98 ➧ 06/01	4402604	+	**85245**	0	0	0	X
ARENA (98-) 2.2 dTi	D	G9T	M	+		01/03 ➧ 11/03	4402604	+	**85245**	0	0	0	X
ARENA (98-) 2.2 dTi	D	G9T	M	+		06/01 ➧ 01/03	4402604	+	**85245**	0	0	0	X
ARENA (98-) 2.5 dCi	D	G9U	M	-		01/98 ➧ 11/03	4402604	+	**85244**	0	0	0	X
ARENA (98-) 2.5 dCi	D	G9U	M	-		11/03 ➧	4402604	+	**85244**	0	0	0	X
ARENA (98-) 2.5 dCi	D	G9U	M	+		01/98 ➧ 06/01	4402604	+	**85245**	0	0	0	X
ARENA (98-) 2.5 dCi	D	G9U	M	+		01/03 ➧ 11/03	4402604	+	**85245**	0	0	0	X
ARENA (98-) 2.5 dCi	D	G9U	M	+		06/01 ➧ 01/03	4402604	+	**85245**	0	0	0	X
ARENA (98-) 2.5 dCi	D	G9U	M	+		11/03 ➧	4402604	+	**85245**	0	0	0	X
ARENA (98-) 2.8 dTi	D	S9W	M	-		10/98 ➧	4402604	+	**85244**	0	0	0	X
ARENA (98-) 2.8 dTi	D	S9W	M	+		01/03 ➧	4402604	+	**85245**	0	0	0	X
ARENA (98-) 2.8 dTi	D	S9W	M	+		10/98 ➧ 01/03	4402604	+	**85245**	0	0	0	X
COMBO (93-) 1.2 i	G	C12NZ	M	-		03/93 ➧ 09/00	1314 518	+	**85192**	0	0	0	X
COMBO (93-) 1.2 i	G	C12NZ	M	+		03/93 ➧ 09/00	1314 521	+	**85005**	0	0	0	X
COMBO (93-) 1.2 i	G	X12SZ	M	-		03/93 ➧ 09/00	1314 518	+	**85192**	0	0	0	X
COMBO (93-) 1.2 i	G	X12SZ	M	+		03/93 ➧ 09/00	1314 521	+	**85005**	0	0	0	X
COMBO (93-) 1.4 i	G	C14NZ	M	-		03/93 ➧ 09/00	1314 518	+	**85192**	0	0	0	X
COMBO (93-) 1.4 i	G	C14NZ	M	+		03/93 ➧ 09/00	1314 521	+	**85005**	0	0	0	X
COMBO (93-) 1.4 i	G	X14SZ	M	-		03/93 ➧ 09/00	1314 518	+	**85192**	0	0	0	X
COMBO (93-) 1.4 i	G	X14SZ	M	+		03/93 ➧ 09/00	1314 521	+	**85005**	0	0	0	X
COMBO (93-) 1.4 i 16V	G	X14XE	M	+		03/93 ➧ 09/00	1314 521	+	**85005**	0	0	0	X
COMBO (93-) 1.7 D	D	17D	M	+/-		03/96 ➧ 09/00	1314 519	+	**85193**	0	0	0	X
COMBO (93-) 1.7 D	D	X17D	M	+/-		03/96 ➧ 09/00			**85193**	0	0	0	X
COMBO (00-) 1.2 i 16V	G	Z12XE	M	+/-	+AC	09/00 ➧	1314 442	+	**85196**	0	0	0	X
COMBO (00-) 1.4 i 16V	G	Z14XE	M	+/-	+AC	09/00 ➧	1314 442	+	**85196**	0	0	0	X
COMBO (00-) 1.4 i 16V	G	Z14XE	M	+/-	AC Fan	09/00 ➧	1341 332	+	**85197**	0	0	0	X
COMBO (00-) 1.7 DTi	D	Y17DT	M	+/-	-AC	09/00 ➧	1314 447	+	**85190**	0	0	0	X
COMBO (00-) 1.7 DTi	D	Y17DTL	M	+/-	-AC	09/00 ➧	1314 447	+	**85190**	0	0	0	X
FRONTERA A (92-) 2.0 i	G	X20SE	M	+/-		10/94 ➧ 08/98	1340 507		**85424**	0	0	0	X
FRONTERA A (92-) 2.2 i 16V	G	X22XE	M	+/-		10/94 ➧ 08/98	1340 507		**85424**	0	0	0	X
FRONTERA B (98-) 2.2 i 16V	G	X22SE	M	+/-		06/99 ➧	1312957	+	**85446**	0	0	0	X
FRONTERA B (98-) 2.2 i 16V	G	Y22SE	M	+/-		06/99 ➧	1312957	+	**85446**	0	0	0	X
MOVANO (98-) 1.9 dCi	D	F9Q	M	-		01/98 ➧ 11/03	4402604	+	**85244**	0	0	0	X
MOVANO (98-) 1.9 dCi	D	F9Q	M	-		11/03 ➧	4402604	+	**85244**	0	0	0	X
MOVANO (98-) 1.9 dCi	D	F9Q	M	+		01/98 ➧ 06/01	4414943	+	**85245**	0	0	0	X
MOVANO (98-) 1.9 dCi	D	F9Q	M	+		01/03 ➧ 11/03	4414943	+	**85245**	0	0	0	X
MOVANO (98-) 1.9 dCi	D	F9Q	M	+		06/01 ➧ 01/03	4414943	+	**85245**	0	0	0	X
MOVANO (98-) 1.9 dCi	D	F9Q	M	+		11/03 ➧	4414943	+	**85245**	0	0	0	X
MOVANO (98-) 2.2 dCi	D	G9T	M	-		01/98 ➧ 11/03	4402604	+	**85244**	0	0	0	X
MOVANO (98-) 2.2 dCi	D	G9T	M	-		11/03 ➧	4402604	+	**85244**	0	0	0	X
MOVANO (98-) 2.2 dCi	D	G9T	M	+		01/98 ➧ 06/01	4414943	+	**85245**	0	0	0	X
MOVANO (98-) 2.2 dCi	D	G9T	M	+		01/03 ➧ 11/03	4414943	+	**85245**	0	0	0	X
MOVANO (98-) 2.2 dCi	D	G9T	M	+		06/01 ➧ 01/03	4414943	+	**85245**	0	0	0	X
MOVANO (98-) 2.2 dCi	D	G9T	M	+		11/03 ➧	4414943	+	**85245**	0	0	0	X
MOVANO (98-) 2.2 dTi	D	G9T	M	-		01/98 ➧ 11/03	4402604	+	**85244**	0	0	0	X
MOVANO (98-) 2.2 dTi	D	G9T	M	+		01/98 ➧ 06/01	4414943	+	**85245**	0	0	0	X

FAN ASSEMBLY

	G/D			AC	Note		OE		Nissens	Dim. H	W	T	Mat.
OPEL LIGHT VAN (../..)													
MOVANO (98-) 2.2 dTi	D	G9T	M	+		01/03 ➧ 11/03	4414943	+	**85245**	0	0	0	X
MOVANO (98-) 2.2 dTi	D	G9T	M	+		06/01 ➧ 01/03	4414943	+	**85245**	0	0	0	X
MOVANO (98-) 2.5 dCi	D	G9U	M	-		01/98 ➧ 11/03	4402604	+	**85244**	0	0	0	X
MOVANO (98-) 2.5 dCi	D	G9U	M	-		11/03 ➧	4402604	+	**85244**	0	0	0	X
MOVANO (98-) 2.5 dCi	D	G9U	M	+		01/98 ➧ 06/01	4414943	+	**85245**	0	0	0	X
MOVANO (98-) 2.5 dCi	D	G9U	M	+		01/03 ➧ 11/03	4414943	+	**85245**	0	0	0	X
MOVANO (98-) 2.5 dCi	D	G9U	M	+		06/01 ➧ 01/03	4414943	+	**85245**	0	0	0	X
MOVANO (98-) 2.5 dCi	D	G9U	M	+		11/03 ➧	4414943	+	**85245**	0	0	0	X
MOVANO (98-) 2.8 dTi	D	S9W	M	-		10/98 ➧	4402604	+	**85244**	0	0	0	X
MOVANO (98-) 2.8 dTi	D	S9W	M	+		01/03 ➧	4414943	+	**85245**	0	0	0	X
MOVANO (98-) 2.8 dTi	D	S9W	M	+		10/98 ➧ 01/03	4414943	+	**85245**	0	0	0	X
MOVANO (98-) 3.0 dCi	D	ZD30	M	+/-	+AC	01/03 ➧	4414943	+	**85245**	0	0	0	X
PEUGEOT LIGHT VAN													
BOXER (94-) 1.9 D	D	XUD9AU	M	+/-	-AC	02/94 ➧ 01/02	1305559080	+	**85020**	0	0	0	X
BOXER (94-) 1.9 TD	D	XUD9UTF	M	+/-	-AC	02/94 ➧ 01/02	1305559080	+	**85020**	0	0	0	X
BOXER (94-) 2.0	G	XU102C	M	+/-	-AC	02/94 ➧ 01/02	1305559080	+	**85020**	0	0	0	X
BOXER (94-) 2.5 D	D	DJ5	M	-		02/94 ➧ 01/02	1305559080	+	**85020**	0	0	0	X
BOXER (94-) 2.5 TD	D	DJ5T	M	-		02/94 ➧ 01/02	1305559080	+	**85020**	0	0	0	X
BOXER (94-) 2.8 D	D	SOFIM	M	+/-	-AC	02/94 ➧ 01/02	1305559080	+	**85020**	0	0	0	X
BOXER (94-) 2.8 HDi	D	8140-43	M	+/-	-AC	02/94 ➧ 01/02	1305559080	+	**85020**	0	0	0	X
BOXER (94-) 2.8 TD	D	8140-43/63	M	+/-	-AC	02/94 ➧ 01/02	1305559080	+	**85020**	0	0	0	X
BOXER (02-) 2.0 HDi	D	DW10TD	M	-		01/02 ➧	1305559080	+	**85020**	0	0	0	X
BOXER (02-) 2.0 HDi	D	DW10TD	M	+		01/02 ➧	1305559080	+	**85020**	0	0	0	X
BOXER (02-) 2.0 i	G	XU10J2	M	+/-	+AC	01/02 ➧	1305199080	+	**85021**	0	0	0	X
BOXER (02-) 2.2 HDi	D	DW12TED	M	-		01/02 ➧	1305559080	+	**85020**	0	0	0	X
BOXER (02-) 2.2 HDi	D	DW12TED	M	+		01/02 ➧	1305559080	+	**85020**	0	0	0	X
BOXER (02-) 2.8 HDi	D	8140-43S	M	-		01/02 ➧	1305559080	+	**85020**	0	0	0	X
BOXER (02-) 2.8 HDi	D	8140-43S	M	+		01/02 ➧	1305559080	+	**85020**	0	0	0	X
E7 - EUROCAB 2.0 HDi	D	DW10BTED	M	+/-		01/01 ➧	1253.42	+	**85006**	0	0	0	X
EXPERT (95-) 1.6 i	G	SPI	M	-		10/95 ➧	1253.45	+	**85003**	0	0	0	X
EXPERT (95-) 1.6 i	G	SPI	M	+		10/95 ➧	1253.41	+	**85004**	0	0	0	X
EXPERT (95-) 1.8 i	G	XU7JP	M	-		07/96 ➧ 05/99	1253.45	+	**85003**	0	0	0	X
EXPERT (95-) 1.8 i	G	XU7JP	M	+		07/96 ➧	1253.41	+	**85004**	0	0	0	X
EXPERT (95-) 1.9 D	D	DW8	M	-		05/98 ➧	1253.41	+	**85004**	0	0	0	X
EXPERT (95-) 1.9 D	D	XUD9A	M	-		10/95 ➧	1253.41	+	**85004**	0	0	0	X
EXPERT (95-) 2.0 HDi	D	DW10ATED	M	+/-		09/00 ➧	1253.42	+	**85006**	0	0	0	X
EXPERT (95-) 2.0 i 16V	G	EW10J4	M	-		09/00 ➧	1253.45	+	**85003**	0	0	0	X
EXPERT (95-) 2.0 i 16V	G	EW10J4	M	+		09/00 ➧	1253.41	+	**85004**	0	0	0	X
PARTNER (96-) 1.1 i	G	TU1M	M	-	ECIA	07/96 ➧ 10/98	1253.51	+	**85317**	0	0	0	X
PARTNER (96-) 1.1 i	G	TU1M	M	-	ECIA	11/98 ➧	1253.51	+	**85317**	0	0	0	X
PARTNER (96-) 1.1 i	G	TU1M	M	+	+AC	07/96 ➧	1253.87	+	**85084**	0	0	0	X
PARTNER (96-) 1.4 i	G	TU3JP	M	+/-	+AC	07/96 ➧ 10/98	1253.87	+	**85084**	0	0	0	X
PARTNER (96-) 1.4 i	G	TU3JP	M	+/-	-AC	07/96 ➧ 10/98	1253.63	+	**85318**	0	0	0	X
PARTNER (96-) 1.4 i	G	TU3JP	M	+/-	+AC	11/98 ➧	1253.87	+	**85084**	0	0	0	X
PARTNER (96-) 1.6 i	G	TU5JP	M	+/-	+AC	07/96 ➧	1253.87	+	**85084**	0	0	0	X
PARTNER (96-) 1.6 i 16V	G	TU5JP4	M	+/-	+AC	11/98 ➧	1253.87	+	**85084**	0	0	0	X
PARTNER (96-) 1.8 D	D	XUD7	M	-		06/96 ➧ 10/98	1250.E9	+	**85074**	0	0	0	X
PARTNER (96-) 1.8 D	D	XUD7	M	-		11/98 ➧	1250.E9	+	**85074**	0	0	0	X
PARTNER (96-) 1.8 D	D	XUD7	M	+		06/96 ➧ 10/98	1250.F1	+	**85083**	0	0	0	X

FAN ASSEMBLY

	G/D			AC	Note		OE		Nissens	Dim. H	Dim. W	Dim. T	Mat.
PEUGEOT LIGHT VAN (../..)													
PARTNER (96-) 1.8 D	D	XUD7	M	+	+AC	10/98 ▸	1250.F1	+	**85083**	0	0	0	X
PARTNER (96-) 1.8 i	G	XU7JB	M	+/-	+AC	07/97 ▸ 10/98	1253.87	+	**85084**	0	0	0	X
PARTNER (96-) 1.8 i	G	XU7JB	M	+/-	+AC	11/98 ▸	1253.87	+	**85084**	0	0	0	X
PARTNER (96-) 1.9 D	D	XUD9,DW8, DW8B	M	-		06/96 ▸ 10/98	1250.E9	+	**85074**	0	0	0	X
PARTNER (96-) 1.9 D	D	XUD9,DW8, DW8B	M	-		11/98 ▸	1250.E9	+	**85074**	0	0	0	X
PARTNER (96-) 1.9 D	D	XUD9,DW8, DW8B	M	+		06/96 ▸ 10/98	1250.F1	+	**85083**	0	0	0	X
PARTNER (96-) 1.9 D	D	XUD9,DW8, DW8B	M	+	+AC	11/98 ▸	1250.F1	+	**85083**	0	0	0	X
PARTNER (96-) 2.0 HDi	D	DW10TD	M	+/-	+AC	01/00 ▸	1250.F1	+	**85083**	0	0	0	X
PARTNER (02-) 1.1 i	G	TU1JP	M	+/-	1 Speed	11/02 ▸	1253.A7	+	**85316**	0	0	0	X
PARTNER (02-) 1.1 i	G	TU1JP	M	+/-	1 Speed	11/02 ▸	1253.A7	+	**85316**	0	0	0	X
PARTNER (02-) 1.4 i	G	TU3JP	M	+/-	1 Speed	11/02 ▸	1253.A7	+	**85316**	0	0	0	X
PARTNER (02-) 1.4 i	G	TU3JP	M	+/-	1 Speed	11/02 ▸	1253.A7	+	**85316**	0	0	0	X
PARTNER (02-) 1.6 i 16V	G	TU5JP4	M	+/-	1 Speed	11/02 ▸	1253.A7	+	**85316**	0	0	0	X
PARTNER (02-) 1.6 i 16V	G	TU5JP4	M	+/-	1 Speed	11/02 ▸	1253.A7	+	**85316**	0	0	0	X
PONTIAC LIGHT VAN													
G6 (05-) 2.0 i 16V TURBO	G		M	+/-		01/05 ▸	1341362	+	**85243**	0	0	0	X
G6 (05-) 2.0 i 16V TURBO	G		A	+/-		01/05 ▸	1341362	+	**85243**	0	0	0	X
MONTANA (97-) 3.4	G		A	+/-		01/98 ▸ 12/99	12362508	+	**85408**	0	0	0	X
MONTANA (97-) 3.4	G		A	+/-		01/00 ▸ 12/00	12362508	+	**85408**	0	0	0	X
TRANS SPORT (97-) 3.4	G		A	+/-		01/98 ▸ 12/99	12362508	+	**85408**	0	0	0	X
TRANS SPORT (97-) 3.4	G		A	+/-		01/00 ▸ 12/00	12362508	+	**85408**	0	0	0	X
TRANS SPORT (97-) 3.4	G		A	+/-		01/01 ▸	10312887	+	**85409**	0	0	0	X
VENTURE (97-) 3.4	G		A	+/-		01/98 ▸ 12/99	12362508	+	**85408**	0	0	0	X
VENTURE (97-) 3.4	G		A	+/-		01/00 ▸ 12/00	12362508	+	**85408**	0	0	0	X
VENTURE (97-) 3.4	G		A	+/-		01/01 ▸	10312887	+	**85409**	0	0	0	X
RENAULT LIGHT VAN													
EXPRESS (91-) 1.4	G	E6J	M	-		09/91 ▸	77 00 653 324	+	**85499**	0	0	0	X
EXPRESS (91-) 1.4 i	G	E7J	M	-		09/91 ▸	77 00 653 324	+	**85499**	0	0	0	X
EXTRA (91-) 1.4	G	E6J	M	-		09/91 ▸	77 00 653 324	+	**85499**	0	0	0	X
EXTRA (91-) 1.4 i	G	E7J	M	-		09/91 ▸	77 00 653 324	+	**85499**	0	0	0	X
KANGOO (98-) 1.2 i	G	D7F	M	-		01/98 ▸	77 01 045 216	+	**85253**	0	0	0	X
KANGOO (98-) 1.4 i	G	E7J	M	-		01/98 ▸	77 01 045 216	+	**85253**	0	0	0	X
KANGOO (98-) 1.9 D	D	F8Q	M	-		09/97 ▸	77 01 045 216	+	**85253**	0	0	0	X
KANGOO (98-) 1.9 dTi	G	F8Q	M	-		03/00 ▸	77 01 043 963	+	**85514**	0	0	0	X
MASTER (98-) 1.9 dCi	D	F9Q	M	-		01/98 ▸ 11/03	77 01 049 603	+	**85244**	0	0	0	X
MASTER (98-) 1.9 dCi	D	F9Q	M	-		11/03 ▸	77 01 049 603	+	**85244**	0	0	0	X
MASTER (98-) 1.9 dCi	D	F9Q	M	+		01/98 ▸ 06/01	77 01 046 205	+	**85245**	0	0	0	X
MASTER (98-) 1.9 dCi	D	F9Q	M	+		01/03 ▸ 11/03	77 01 046 205	+	**85245**	0	0	0	X
MASTER (98-) 1.9 dCi	D	F9Q	M	+		06/01 ▸ 01/03	77 01 046 205	+	**85245**	0	0	0	X
MASTER (98-) 1.9 dCi	D	F9Q	M	+		11/03 ▸	77 01 046 205	+	**85245**	0	0	0	X
MASTER (98-) 2.2 dCi	D	G9T	M	-		01/98 ▸ 11/03	77 01 049 603	+	**85244**	0	0	0	X
MASTER (98-) 2.2 dCi	D	G9T	M	-		11/03 ▸	77 01 049 603	+	**85244**	0	0	0	X
MASTER (98-) 2.2 dCi	D	G9T	M	+		01/98 ▸ 06/01	77 01 046 205	+	**85245**	0	0	0	X
MASTER (98-) 2.2 dCi	D	G9T	M	+		01/03 ▸ 11/03	77 01 046 205	+	**85245**	0	0	0	X
MASTER (98-) 2.2 dCi	D	G9T	M	+		06/01 ▸ 01/03	77 01 046 205	+	**85245**	0	0	0	X
MASTER (98-) 2.2 dCi	D	G9T	M	+		11/03 ▸	77 01 046 205	+	**85245**	0	0	0	X
MASTER (98-) 2.2 dTi	D	G9T	M	-		01/98 ▸ 11/03	77 01 049 603	+	**85244**	0	0	0	X

FAN ASSEMBLY

	G/D			AC	Note		OE	Nissens	Dim. H	Dim. W	Dim. T	Mat.
RENAULT LIGHT VAN (../..)												
MASTER (98-) 2.2 dTi	D	G9T	M	+		01/98 ➧ 06/01	77 01 046 205+	**85245**	0	0	0	X
MASTER (98-) 2.2 dTi	D	G9T	M	+		01/03 ➧ 11/03	77 01 046 205+	**85245**	0	0	0	X
MASTER (98-) 2.2 dTi	D	G9T	M	+		06/01 ➧ 01/03	77 01 046 205+	**85245**	0	0	0	X
MASTER (98-) 2.5 dCi	D	G9U	M	-		07/98 ➧ 11/03	77 01 049 603+	**85244**	0	0	0	X
MASTER (98-) 2.5 dCi	D	G9U	M	-		11/03 ➧	77 01 049 603+	**85244**	0	0	0	X
MASTER (98-) 2.5 dCi	D	G9U	M	+		01/03 ➧ 11/03	77 01 046 205+	**85245**	0	0	0	X
MASTER (98-) 2.5 dCi	D	G9U	M	+		06/01 ➧ 01/03	77 01 046 205+	**85245**	0	0	0	X
MASTER (98-) 2.5 dCi	D	G9U	M	+		07/98 ➧ 06/01	77 01 046 205+	**85245**	0	0	0	X
MASTER (98-) 2.5 dCi	D	G9U	M	+		11/03 ➧	77 01 046 205+	**85245**	0	0	0	X
MASTER (98-) 2.8 dTi	D	S9W	M	-		07/98 ➧	77 01 049 603+	**85244**	0	0	0	X
MASTER (98-) 2.8 dTi	D	S9W	M	+		09/98 ➧ 01/03	77 01 046 205+	**85245**	0	0	0	X
MASTER (98-) 3.0 dCi	D	ZD30	M	+/-	+AC	07/03 ➧	77 01 046 205+	**85245**	0	0	0	X
RAPID (91-) 1.4	G	E6J	M	-		09/91 ➧	77 00 653 324+	**85499**	0	0	0	X
RAPID (91-) 1.4 i	G	E7J	M	-		09/91 ➧	77 00 653 324+	**85499**	0	0	0	X
SEAT LIGHT VAN												
INCA (95-) 1.4 i	G	AEX	M	+		11/95 ➧ 12/97	6K0.121.191 +	**85468**	0	0	0	X
INCA (95-) 1.4 i	G	AKV	M	+		12/97 ➧ 09/00	6K0.121.191 +	**85468**	0	0	0	X
INCA (95-) 1.4 i	G	APQ	M	+		12/97 ➧ 06/03	6K0.121.191 +	**85468**	0	0	0	X
INCA (95-) 1.4 i	G	AUD	M	+/-		09/00 ➧ 06/03	6K0.121.191 +	**85468**	0	0	0	X
INCA (95-) 1.4 i 16V	G	AUA	M	+/-		09/00 ➧ 06/03	6K0.121.191 +	**85468**	0	0	0	X
INCA (95-) 1.6 i	G	1F	M	+		11/95 ➧ 05/97	6K0.121.191 +	**85468**	0	0	0	X
INCA (95-) 1.6 i	G	AEE	M	+		06/97 ➧ 09/00	6K0.121.191 +	**85468**	0	0	0	X
INCA (95-) 1.7 SDi	D	AHB	M	+		07/96 ➧ 09/00	6K0.121.191 +	**85468**	0	0	0	X
INCA (95-) 1.9 D	D	1Y	M	-		11/95 ➧ 06/03	6K0.121.191 A	**85469**	0	0	0	X
INCA (95-) 1.9 D	D	1Y	M	+		11/95 ➧ 06/03	6K0.121.191 C	**85470**	0	0	0	X
INCA (95-) 1.9 Sdi	D	AEY	M	+		11/95 ➧ 09/00	6K0.121.191 +	**85468**	0	0	0	X
INCA (95-) 1.9 Sdi	D	AYQ	M	+/-		09/00 ➧ 06/03	6K0.121.191 +	**85468**	0	0	0	X
INCA (95-) 1.9 Sdi	D	AYQ	M	+/-		09/00 ➧ 06/03	6K0.121.191 +	**85468**	0	0	0	X
VOLKSWAGEN LIGHT VAN												
CADDY (95-) 1.6 i	G	1F	M	+		11/95 ➧ 05/97	6K0.121.191 +	**85468**	0	0	0	X
CADDY (95-) 1.7 SDi	D	AHB	M	+		07/96 ➧ 09/00	6K0.121.191 +	**85468**	0	0	0	X
CADDY (95-) 1.9 D	D	1Y	M	-		11/95 ➧ 06/03	6K0.121.191 A	**85469**	0	0	0	X
CADDY (95-) 1.9 D	D	1Y	M	+		11/95 ➧ 06/03	6K0.121.191 C	**85470**	0	0	0	X
CADDY (95-) 1.9 Sdi	D	AEY	M	+		11/95 ➧ 09/00	6K0.121.191 +	**85468**	0	0	0	X
CADDY (95-) 1.9 Sdi	D	AYQ	M	+/-		09/00 ➧ 06/03	6K0.121.191 +	**85468**	0	0	0	X
CADDY (95-) 1.9 Sdi	D	AYQ	M	+/-		09/00 ➧ 06/03	6K0.121.191 +	**85468**	0	0	0	X
CADDY (95-) 1.9 TDi	D	1Z	M	+		10/96 ➧ 03/97	6K0.121.191 +	**85468**	0	0	0	X
TRANSPORTER T4 (90-) 2.4 D	D	AJA	M/A	+/-	SIEMENS	04/97 ➧ 06/03	701.121.207 C+	**85248**	0	0	0	X
TRANSPORTER T4 (90-) 2.4 D	D	AJA	M/A	+/-	SIEMENS	04/97 ➧ 06/03	701.121.207 C+	**85248**	0	0	0	X
TRANSPORTER T4 (90-) 2.5 i	G	ACU	M/A	-	SIEMENS	02/94 ➧ 07/94	701.121.207 C+	**85248**	0	0	0	X
TRANSPORTER T4 (90-) 2.5 i	G	ACU	M/A	+/-	SIEMENS	02/94 ➧ 10/96	701.121.207 C+	**85248**	0	0	0	X
TRANSPORTER T4 (90-) 2.5 i	G	AEN	M/A	+/-	SIEMENS	05/95 ➧ 12/95	701.121.207 C+	**85248**	0	0	0	X
TRANSPORTER T4 (90-) 2.5 i	G	AET	M/A	+/-	SIEMENS	08/96 ➧ 06/03	701.121.207 C+	**85248**	0	0	0	X
TRANSPORTER T4 (90-) 2.5 i	G	AET	M/A	+/-	SIEMENS	08/96 ➧ 06/03	701.121.207 C+	**85248**	0	0	0	X
TRANSPORTER T4 (90-) 2.5 i	G	AEU	M/A	+/-	SIEMENS	08/96 ➧ 06/03	701.121.207 C+	**85248**	0	0	0	X
TRANSPORTER T4 (90-) 2.5 i	G	AEU	M/A	+/-	SIEMENS	08/96 ➧ 06/03	701.121.207 C+	**85248**	0	0	0	X
TRANSPORTER T4 (90-) 2.5 i	G	APL	M/A	+/-	SIEMENS	05/99 ➧ 12/99	701.121.207 C+	**85248**	0	0	0	X
TRANSPORTER T4 (90-) 2.5 i	G	APL	M/A	+/-	SIEMENS	05/99 ➧ 12/99	701.121.207 C+	**85248**	0	0	0	X
TRANSPORTER T4 (90-) 2.5 i	G	AVT	M/A	+/-	SIEMENS	12/99 ➧ 06/03	701.121.207 C+	**85248**	0	0	0	X

FAN ASSEMBLY

	G/D			AC	Note		OE	Nissens	Dim. H	Dim. W	Dim. T	Mat.
VOLKSWAGEN LIGHT VAN (../..)												
TRANSPORTER T4 (90-) 2.5 i	G	AVT	M/A	+/-	SIEMENS	12/99 ➧ 06/03	701.121.207 C+	**85248**	0	0	0	X
TRANSPORTER T4 (90-) 2.5 i	G	AAF	M/A	-	SIEMENS	09/90 ➧ 12/93	701.121.207 C+	**85248**	0	0	0	X
TRANSPORTER T4 (90-) 2.5 i	G	AAF	M/A	+/-	SIEMENS	09/90 ➧ 12/93	701.121.207 C+	**85248**	0	0	0	X

NOTES

3 Drawings
Tegninger
Zeichnung
Plans

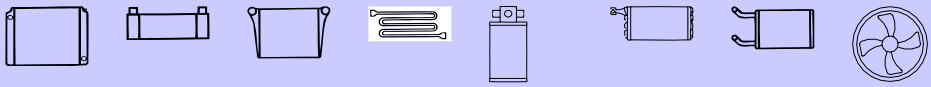

NOTES

608911

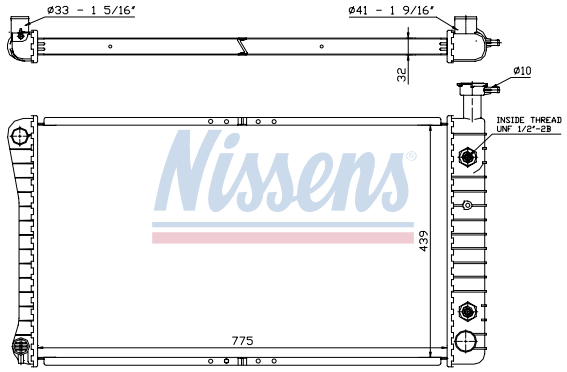

CHEVROLET **VAN G-SERIE (81-)**

60915A

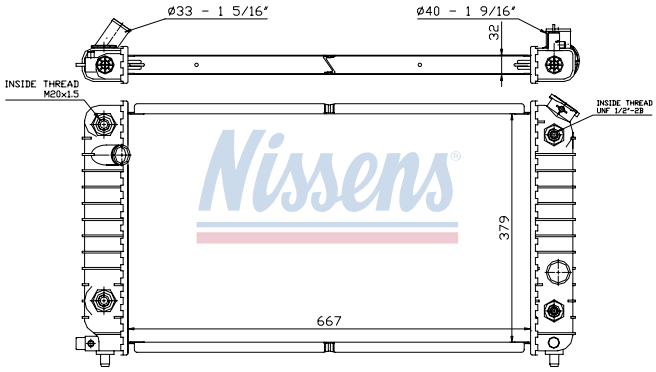

CHEVROLET
GMC
OLDSMOBILE

609361

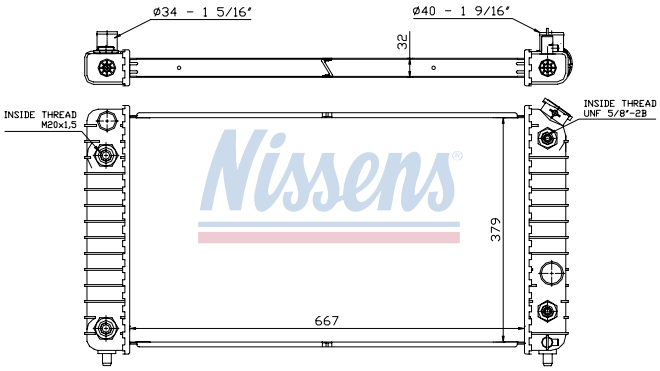

CHEVROLET
GMC
OLDSMOBILE

60936A

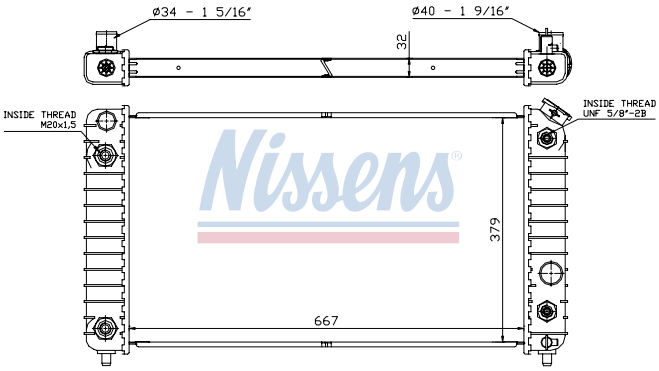

CHEVROLET
GMC
OLDSMOBILE

60940

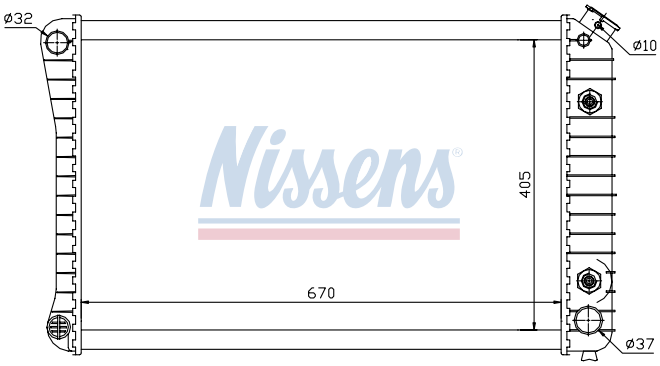

CHEVROLET **VAN G-SERIE (81-)**

60945

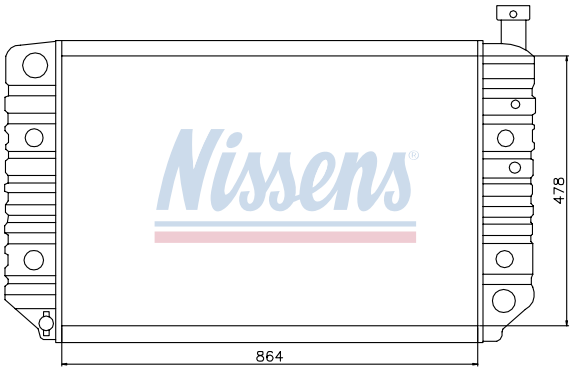

CHEVROLET **PICKUP C/K**
CHEVROLET **SUBURBAN (92-)**
GMC **PICKUP C/K**
GMC **SUBURBAN (92-)**

60946

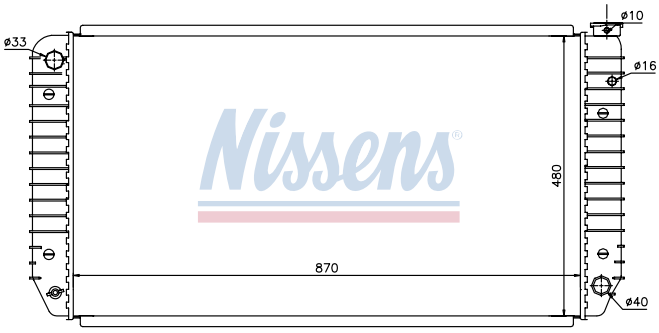

CHEVROLET	BLAZER (82-)
CHEVROLET	PICKUP C/K
CHEVROLET	SUBURBAN (92-)
GMC	PICKUP C/K
GMC	SUBURBAN (92-)

60949

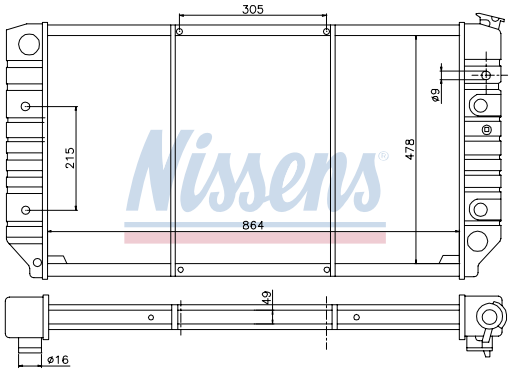

CHEVROLET
GMC

60959

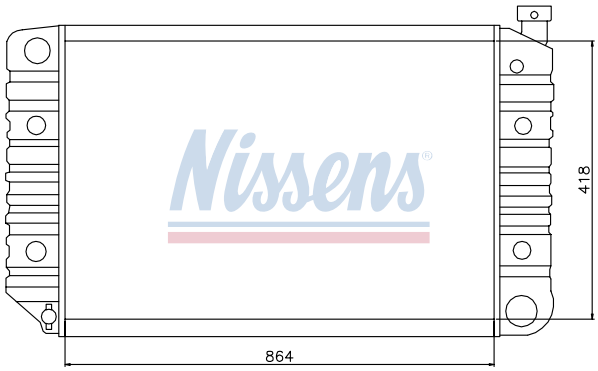

CHEVROLET	BLAZER (82-)
CHEVROLET	PICKUP C/K
GMC	PICKUP C/K

60960

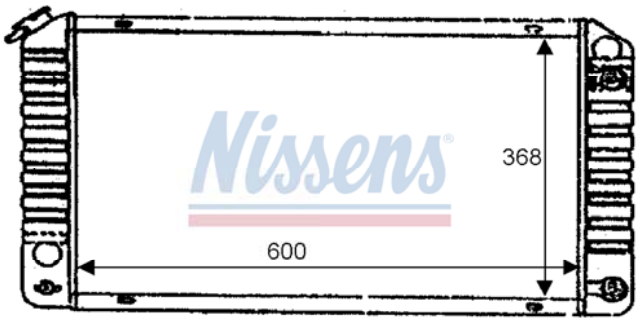

CHEVROLET	BLAZER (82-)
CHEVROLET	PICKUP S/T
GMC	JIMMY (82-)
GMC	PICKUP S/T
GMC	SONOMA (91-)

60962

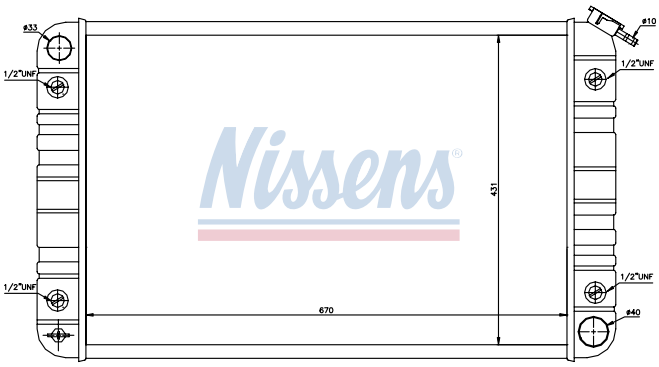

CHEVROLET
OLDSMOBILE
PONTIAC

60967

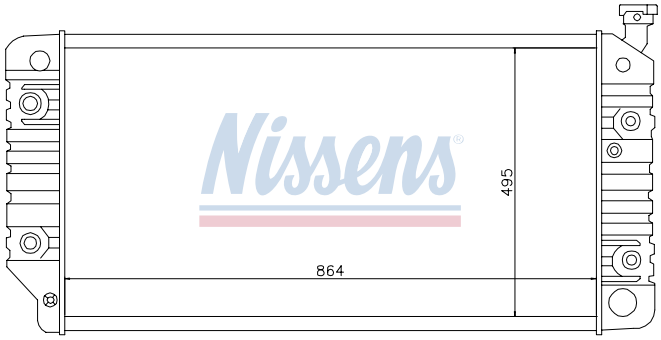

CHEVROLET	PICKUP C/K
GMC	PICKUP C/K

60968A

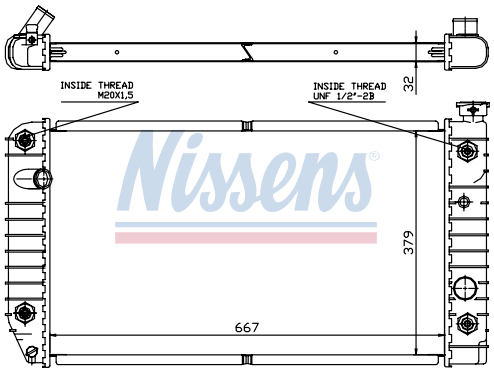

CHEVROLET	BLAZER (82-)
CHEVROLET	PICKUP S/T
GMC	JIMMY (82-)
GMC	PICKUP S/T
GMC	SONOMA (91-)
OLDSMOBILE	BRAVADA

60969

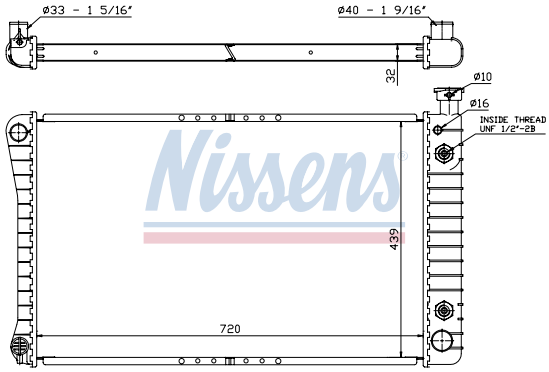

GMC	PICKUP C/K

609691

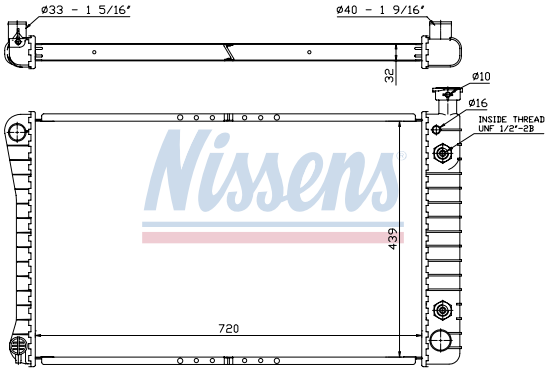

CHEVROLET	PICKUP C/K
GMC	PICKUP C/K

60970

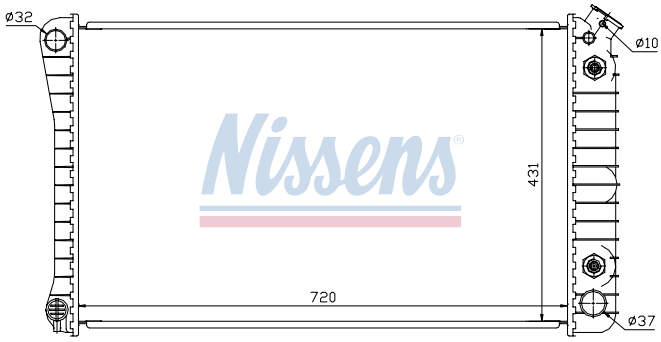

CHEVROLET
GMC

60970A

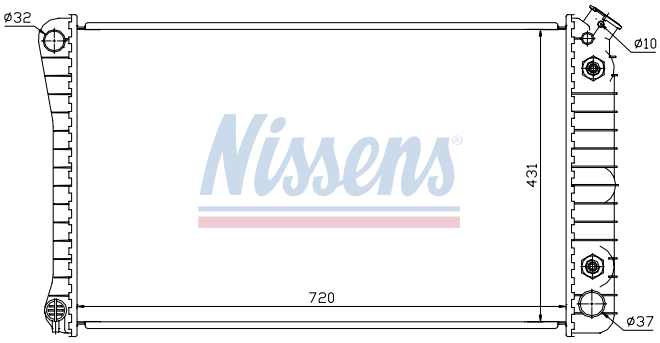

CHEVROLET
GMC

60971

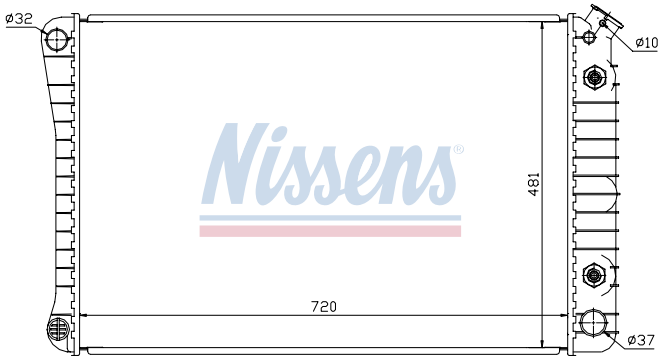

CHEVROLET
GMC

60972

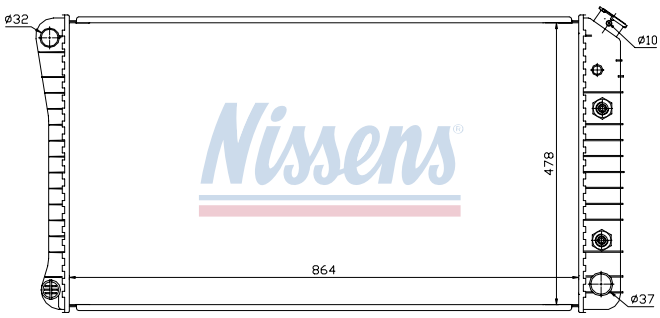

CHEVROLET	PICKUP R/V
CHEVROLET	SUBURBAN (81-)
GMC	PICKUP R/V

60974

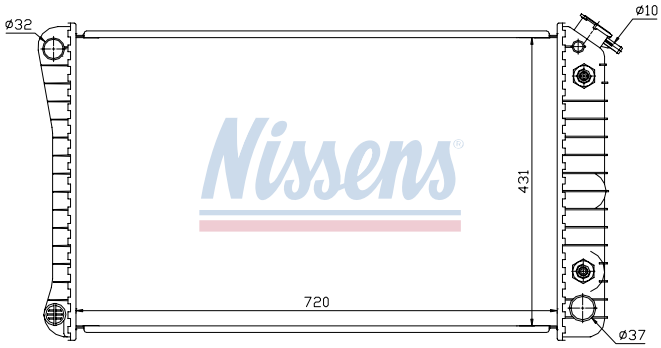

CHEVROLET	
GMC	

61190

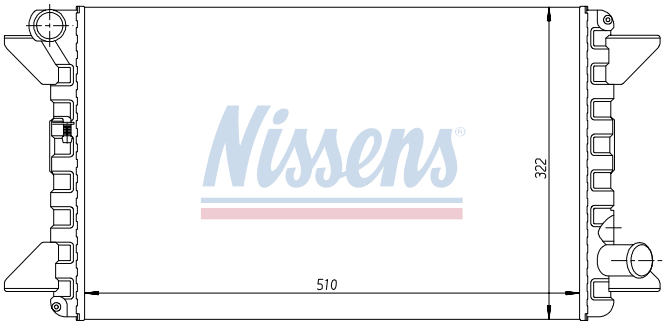

CITROEN	C 15 (84-)
CITROEN	C 15 (84-)

61315A

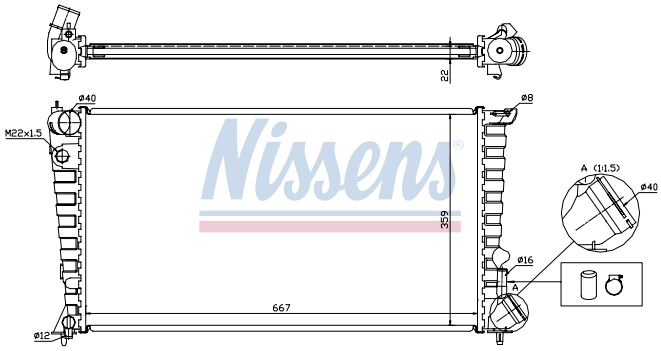

CITROEN	BERLINGO (96-)
PEUGEOT	PARTNER (96-)
CITROEN	BERLINGO (96-)
PEUGEOT	PARTNER (96-)
CITROEN	C 15 (84-)

61351

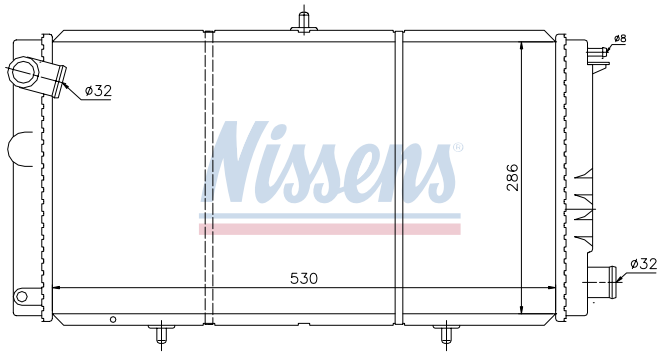

CITROEN	C 15 (84-)
CITROEN	C 15 (84-)

61357

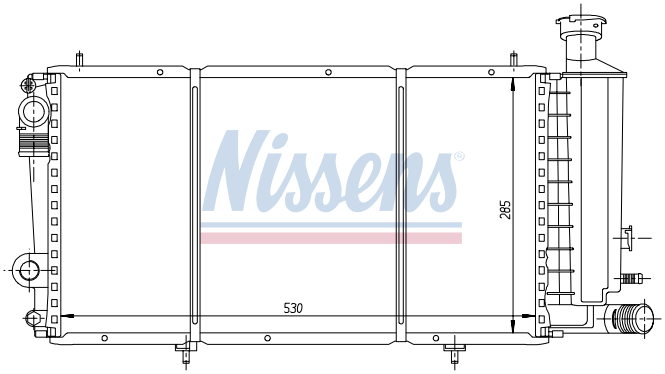

CITROEN	C 15 (84-)

61390A

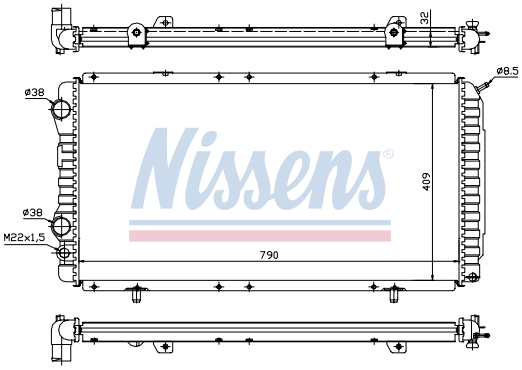

CITROEN
FIAT
PEUGEOT

61393

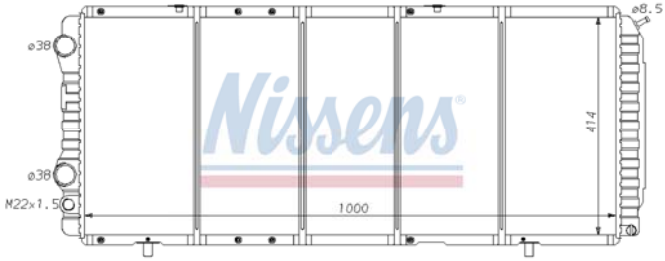

CITROEN	JUMPER (94-)
CITROEN	RELAY (94-)
FIAT	DUCATO (94-)
PEUGEOT	BOXER (94-)

61396

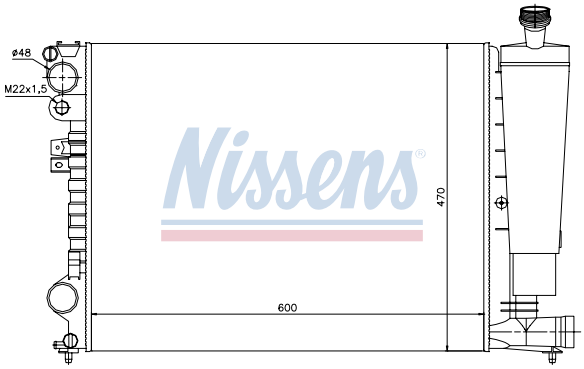

FIAT	SCUDO (96-)
PEUGEOT	EXPERT (95-)
FIAT	FIORINO (79-)
FIAT	DOBLO (01-)
FIAT	DOBLO (01-)
FIAT	DOBLO (01-)
FIAT	DOBLO (01-)

61769

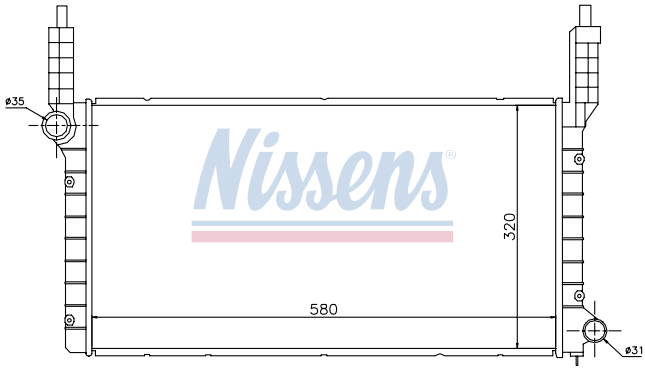

FIAT	DOBLO (01-)

61848

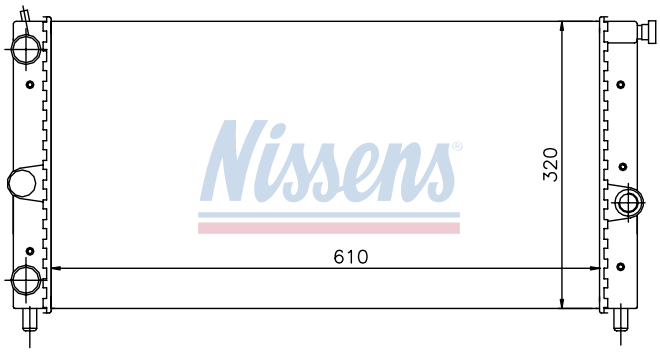

FIAT	FIORINO (88-)
FIAT	FIORINO (88-)

61853

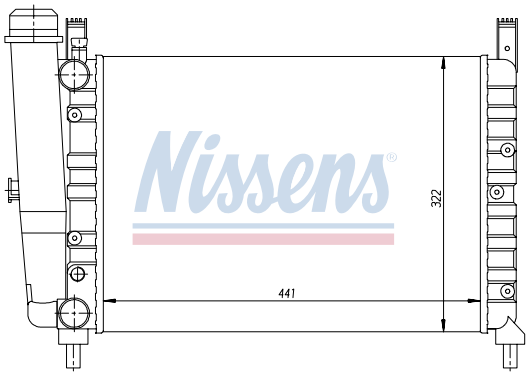

FIAT	FIORINO (88-)

61860

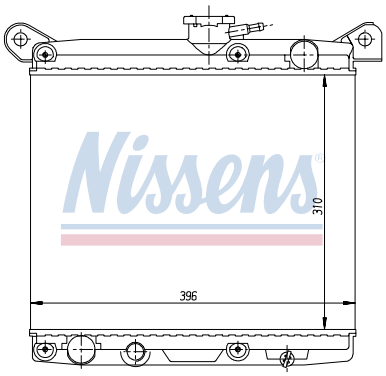

FIAT	FIORINO (79-)
CITROEN	JUMPER (94-)
CITROEN	RELAY (94-)

61862

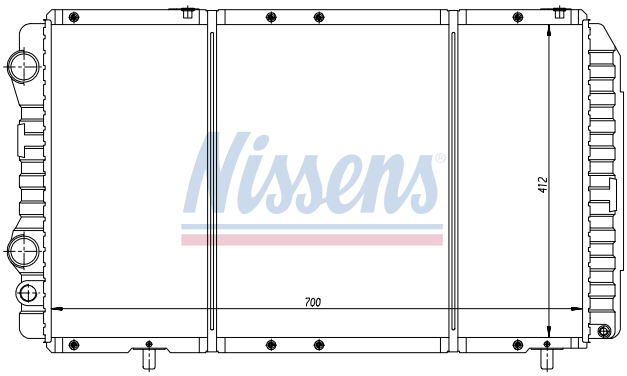

FIAT	DUCATO (94-)
PEUGEOT	BOXER (94-)
FIAT	FIORINO (88-)
CITROEN	DISPATCH (95-)

61875A

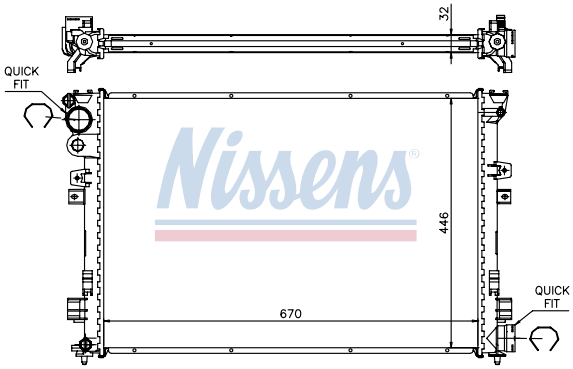

CITROEN
FIAT
PEUGEOT
FORD
MAZDA

62015A

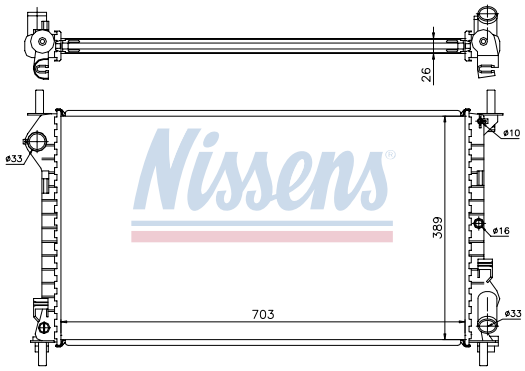

FORD	TRANSIT CONNECT (02-)

62021A

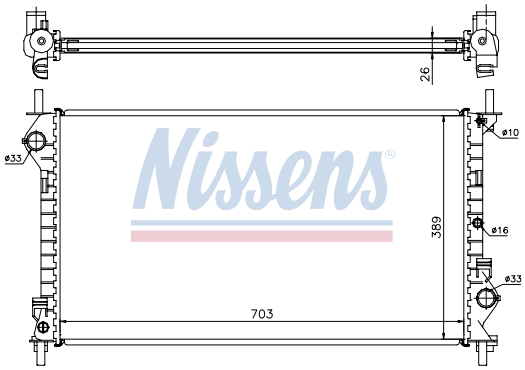

FORD	TRANSIT CONNECT (02-)

62038

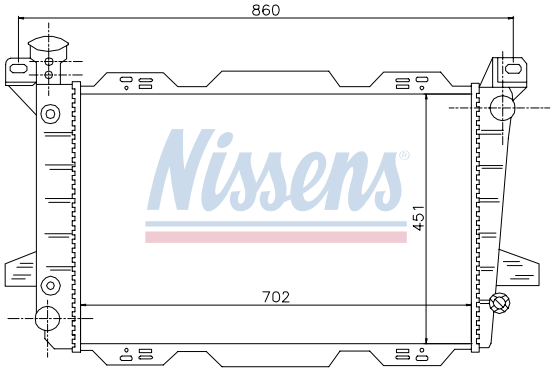

FORD USA	BRONCO (85-)
FORD USA	BRONCO (92-)
FORD USA	F150 (92-)
FORD USA	F250 (92-)
FORD USA	F350 (92-)
FORD USA	F450 (92-)
FORD USA	RANGER (85-)

62043A

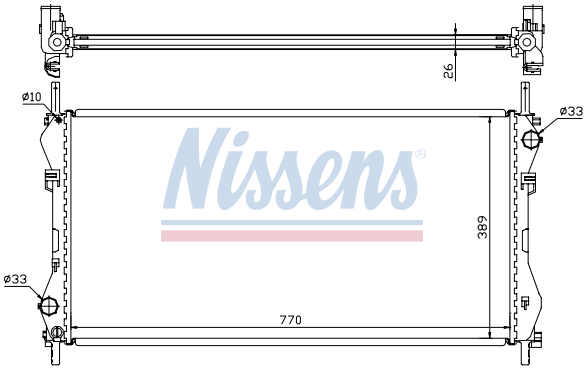

FORD **TRANSIT (00-)**

62044A

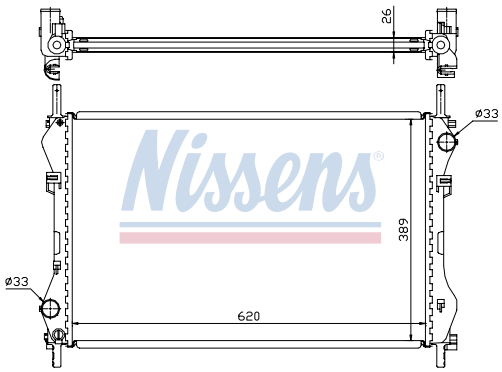

FORD **TRANSIT (00-)**

62046A

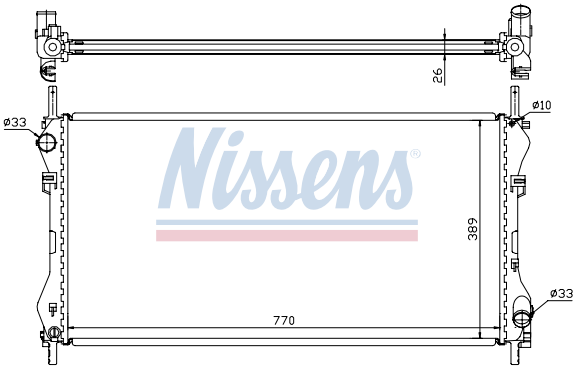

FORD **TRANSIT (00-)**

62048

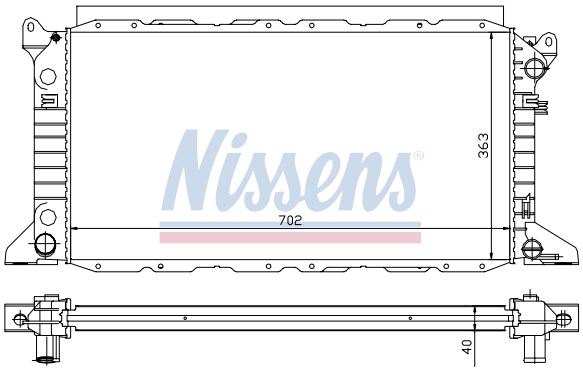

FORD **TRANSIT (94-)**

62049

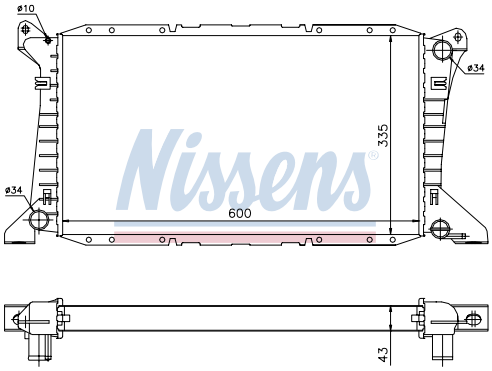

FORD **TRANSIT (94-)**

62057A

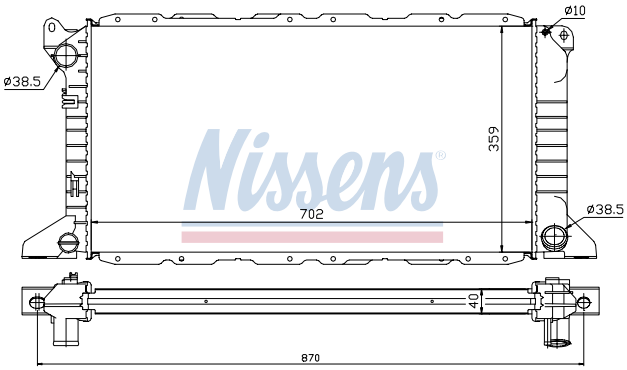

FORD **TRANSIT (94-)**

62058A

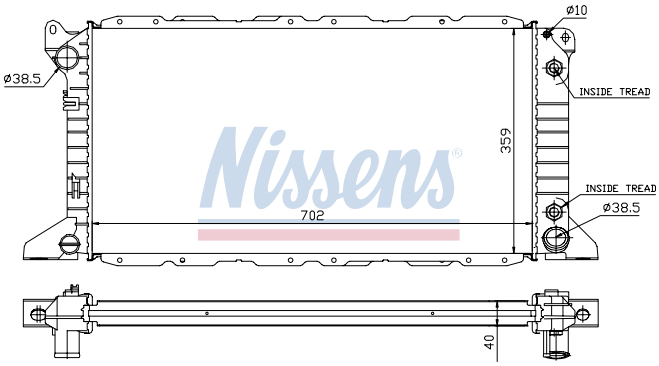

FORD **TRANSIT (94-)**

62060

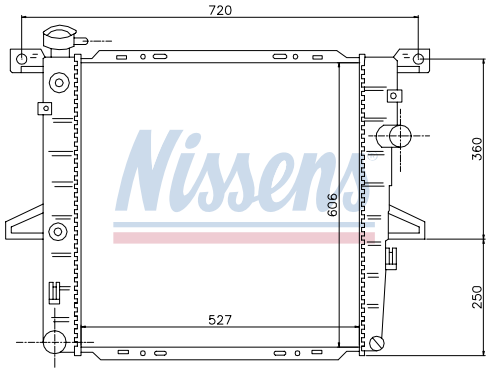

FORD **EXPLORER (91-)**

62061

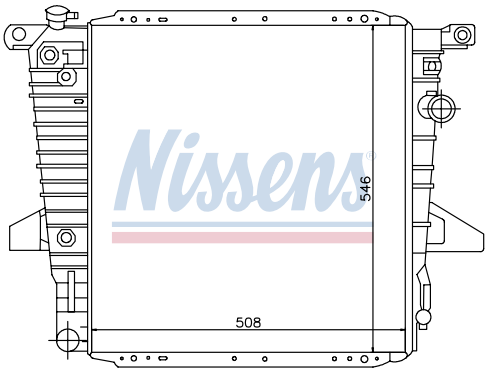

FORD **EXPLORER (91-)**

620671

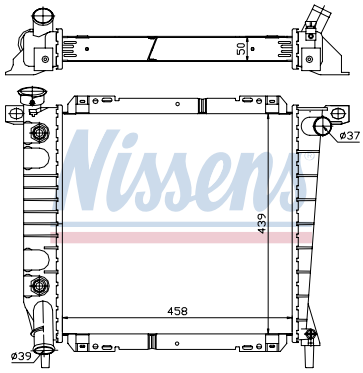

FORD **EXPLORER (91-)**

62067A

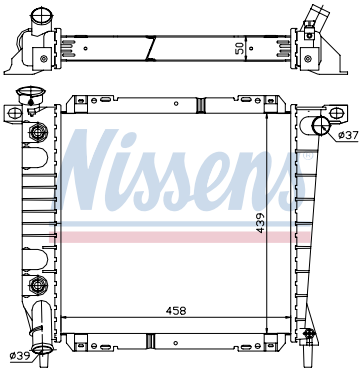

FORD **EXPLORER (91-)**

62069A

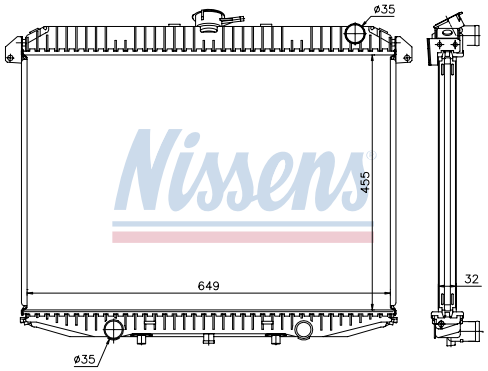

FORD **MAVERICK (93-)**
NISSAN **TERRANO (93-)**

62070A

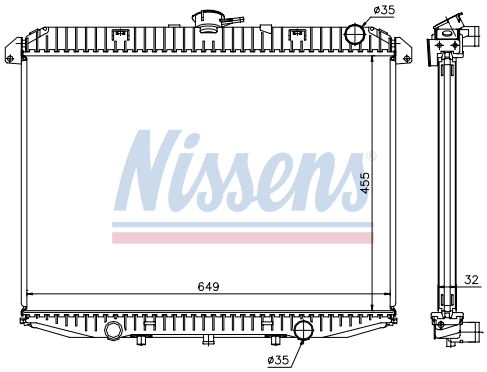

FORD	MAVERICK (93-)
NISSAN	TERRANO (93-)

62071

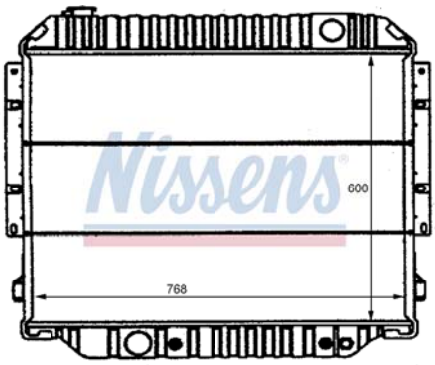

FORD	F-SERIE (83-)
FORD	PICKUP F-SER (85-)

62080A

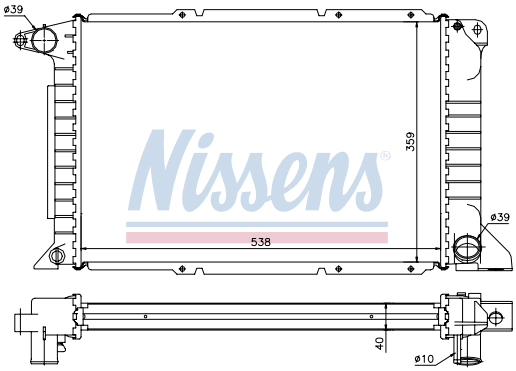

FORD	TRANSIT (94-)

62081A

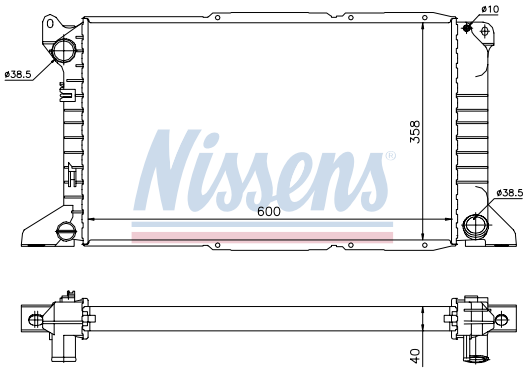

FORD	TRANSIT (94-)

62096

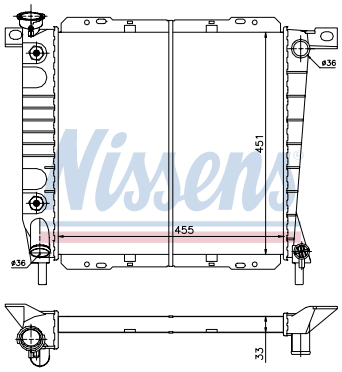

FORD USA	BRONCO (85-)
FORD USA	RANGER (85-)

62098

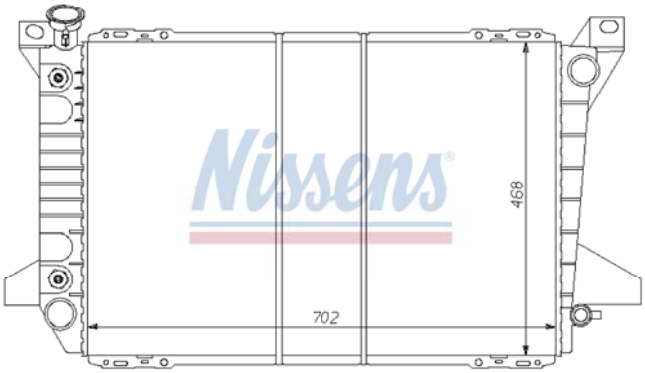

FORD	
FORD USA	

620981

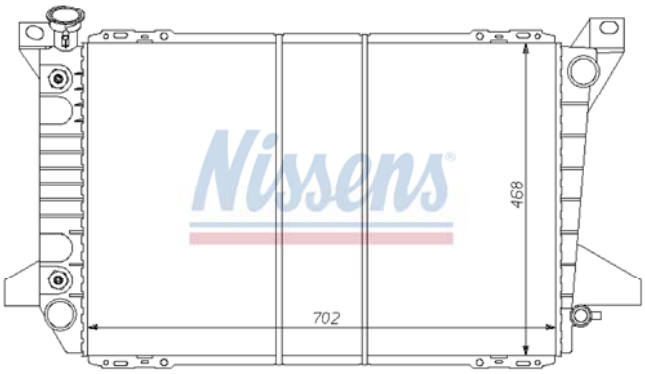

FORD
FORD USA

62103

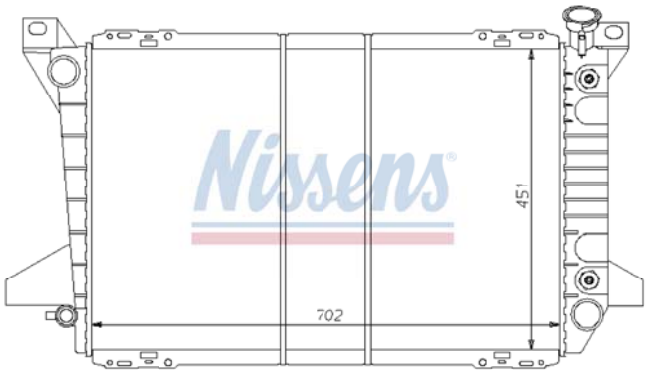

FORD	PICKUP F-SER (85-)
FORD USA	BRONCO (85-)
FORD USA	BRONCO (92-)
FORD USA	F150 (92-)
FORD USA	F250 (92-)
FORD USA	F350 (92-)
FORD USA	RANGER (85-)

62108

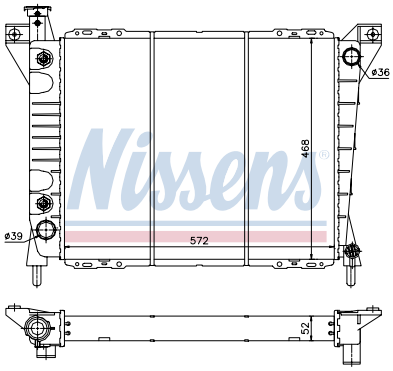

FORD USA — AEROSTAR (85-)

62109

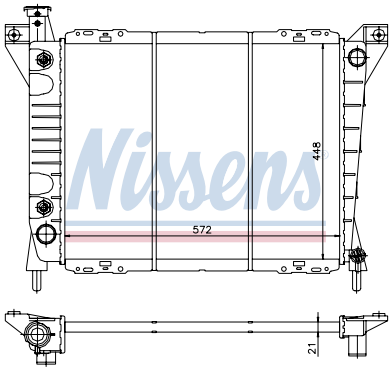

FORD USA — AEROSTAR (85-)

62156A

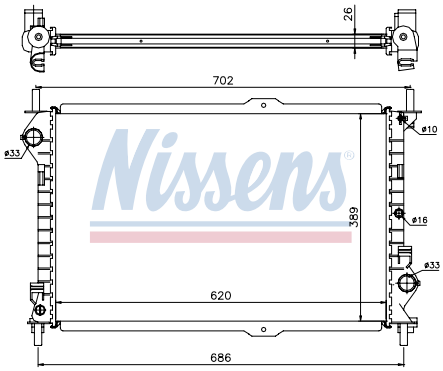

FORD — TRANSIT CONNECT (02-)

62177A

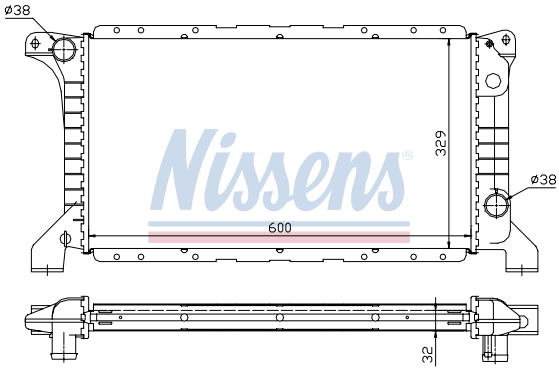

FORD — TRANSIT (92-)

62178

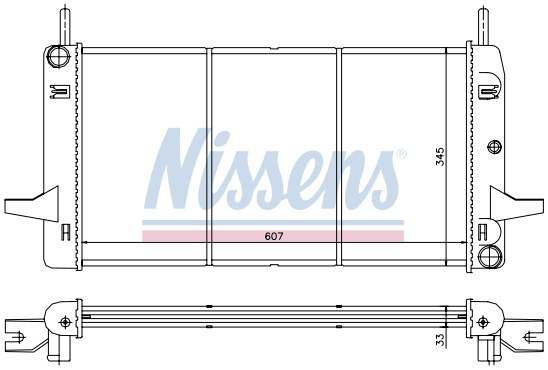

FORD SIERRA PICKUP (87-)
FORD SIERRA PICKUP (87-)

62241A

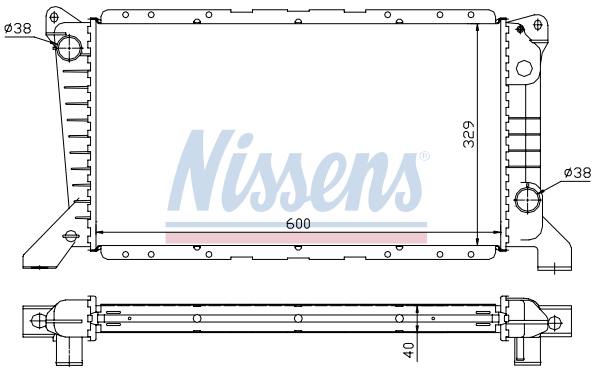

FORD TRANSIT (94-)

62243

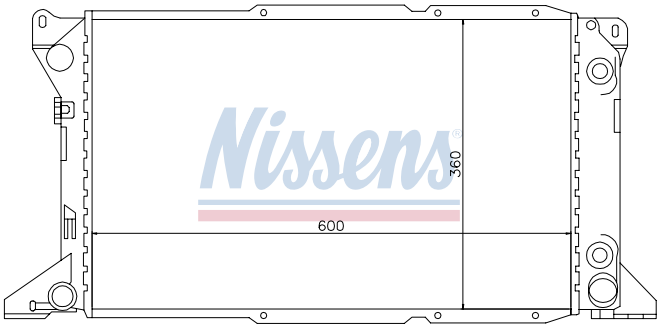

FORD TRANSIT (94-)

62246

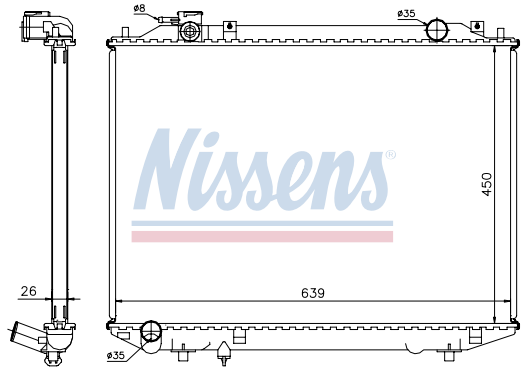

FORD RANGER (98-)
MAZDA B 2500 (96-)

62246A

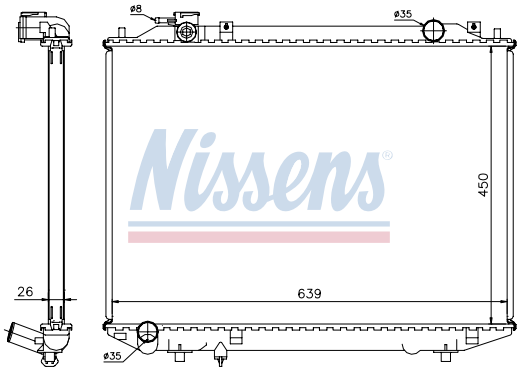

FORD RANGER (98-)
MAZDA B 2500 (96-)

62249A

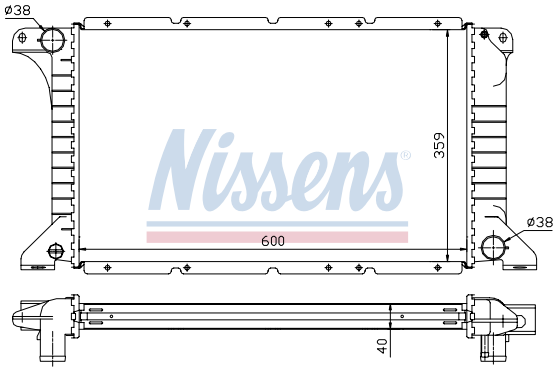

FORD TRANSIT (92-)

62340

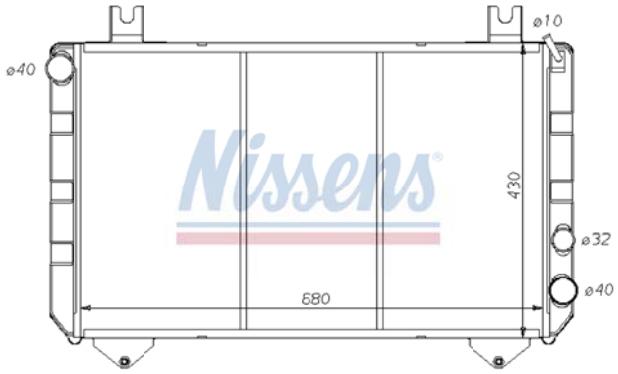

FORD **TRANSIT (78-)**

62366A

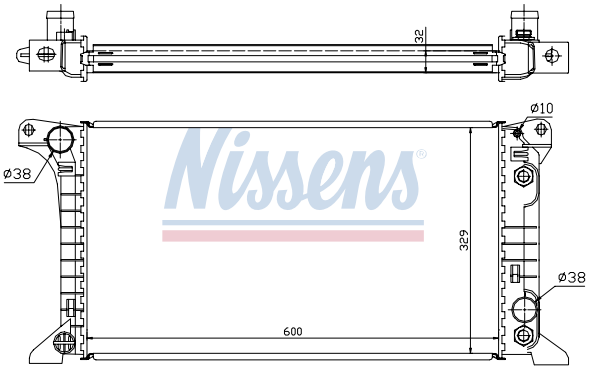

FORD **TRANSIT (86-)**

62367A

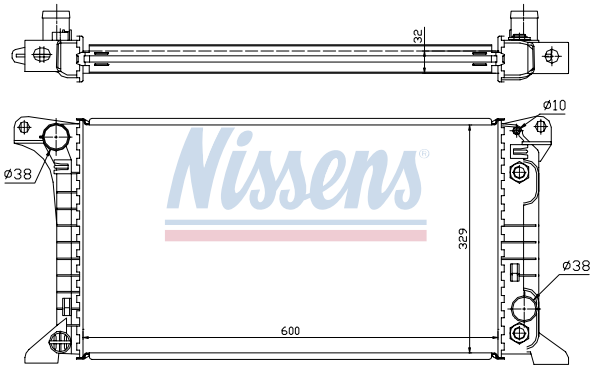

FORD **TRANSIT (86-)**

62369A

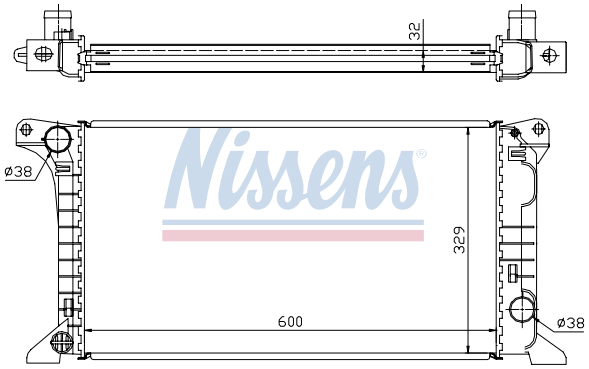

FORD **TRANSIT (86-)**

62370

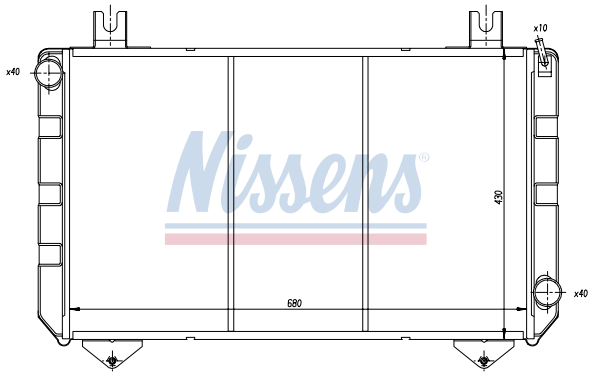

FORD **TRANSIT (78-)**

62371

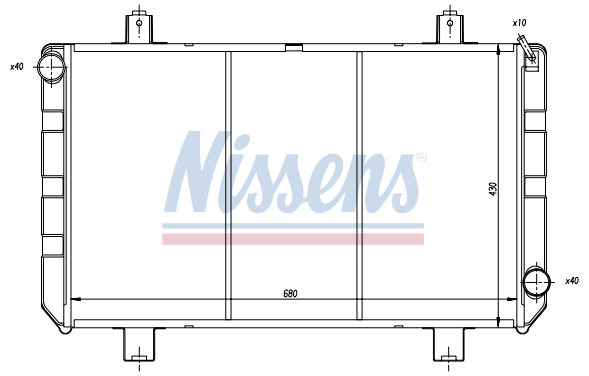

FORD **TRANSIT (78-)**

62381

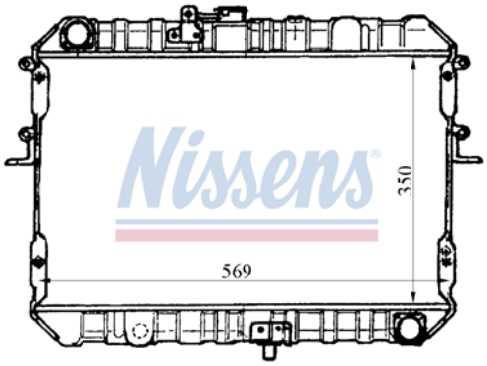

MAZDA	E 2000 D (87-)
MAZDA	E 2200 D (87-)

62416

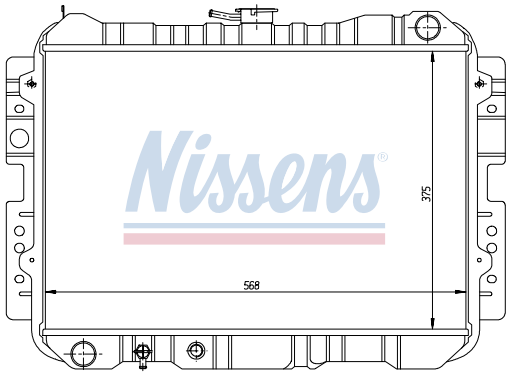

MAZDA	B 1600 (84-)
MAZDA	B 2000 (84-)
MAZDA	B 2200 (84-)

62417

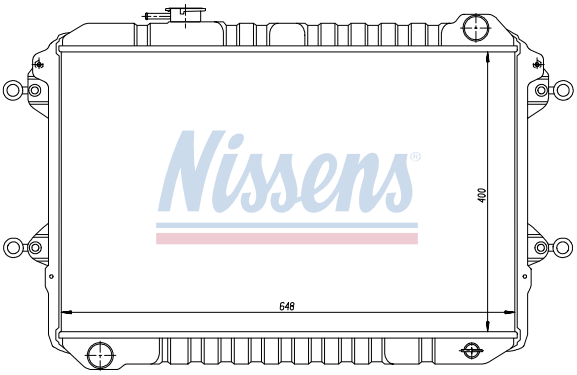

MAZDA B 2600 (89-)

62419

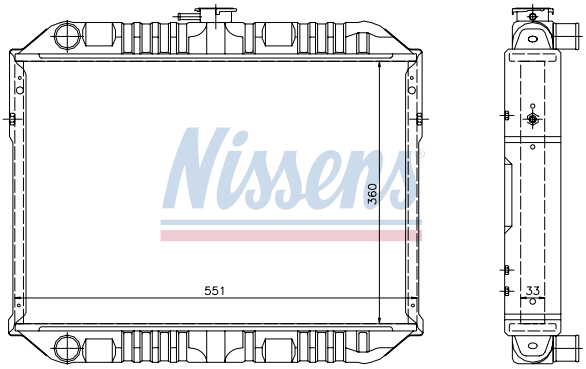

NISSAN VANETTE (86-)

62422

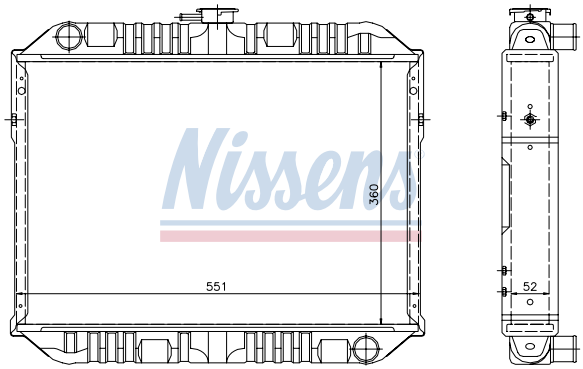

NISSAN VANETTE (86-)

62435

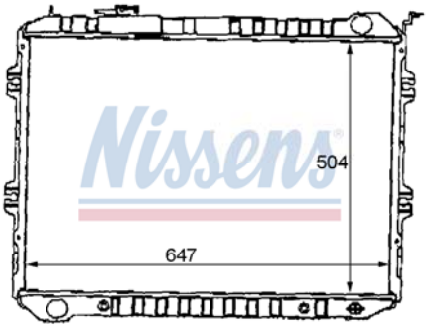

MAZDA MPV LV (95-)

62436

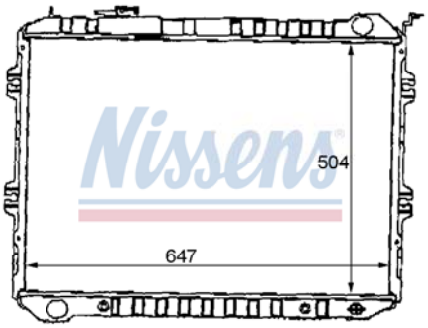

MAZDA MPV LV (95-)

62461

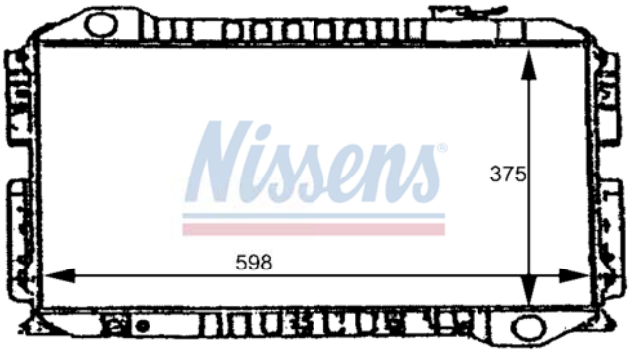

MAZDA B 2600 (84-)

62516

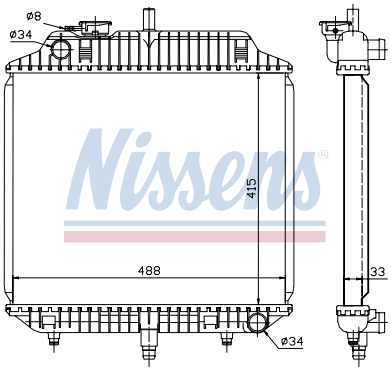

MERCEDES MB 100 D (88-)

62519A

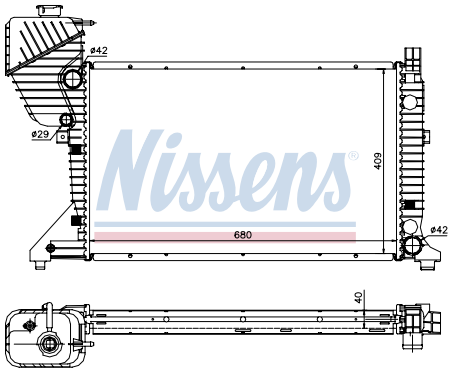

MERCEDES SPRINTER (95-)

62559

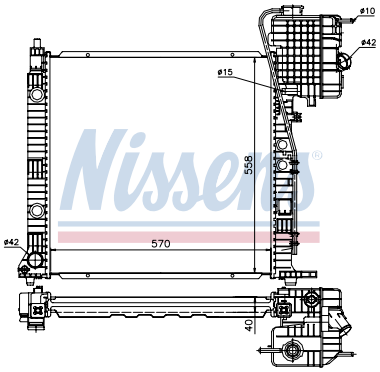

MERCEDES VITO W 638 (96-)
MERCEDES VITO W 638 (96-)

62562

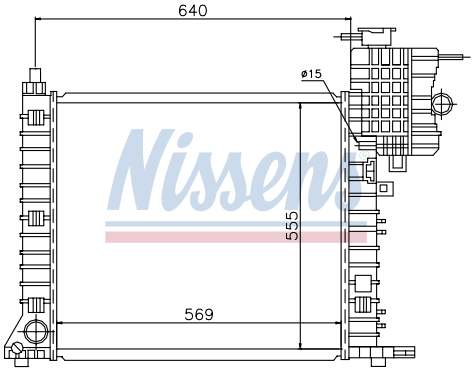

MERCEDES VITO W 638 (96-)
MERCEDES VIANO W 639 (03-)

62572

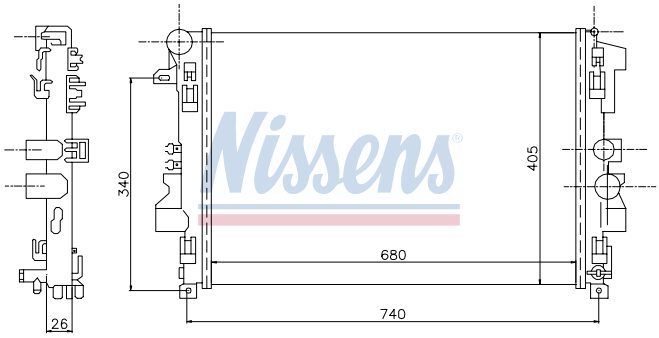

MERCEDES	VITO W 639 (03-)
MERCEDES	VITO W 638 (96-)

62574

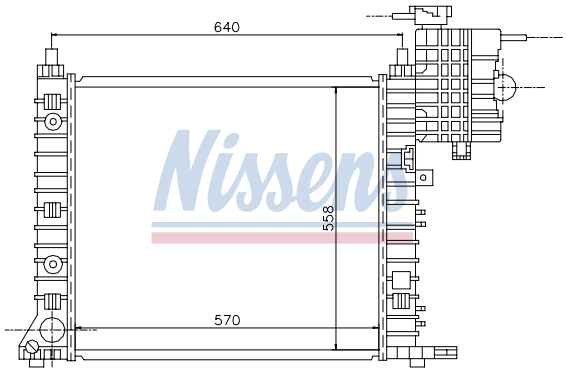

MERCEDES	VITO W 638 (96-)
MERCEDES	VITO W 638 (96-)

62581

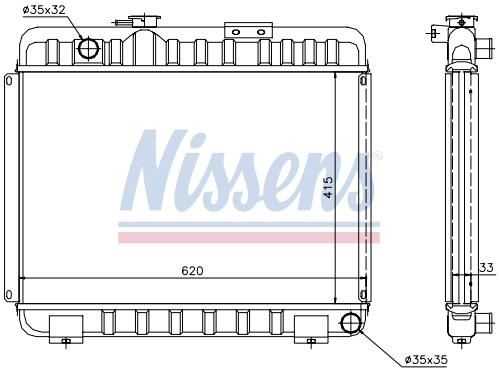

MERCEDES	207 D (77-)
MERCEDES	307 D (77-)
MERCEDES	407 D (81-)
MERCEDES	409 D (77-)

62597A

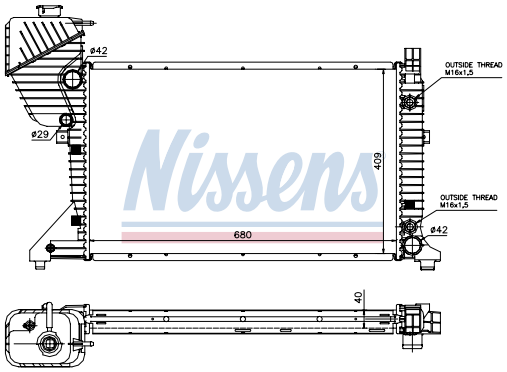

MERCEDES	SPRINTER (95-)
MERCEDES	309 (68-)

62632

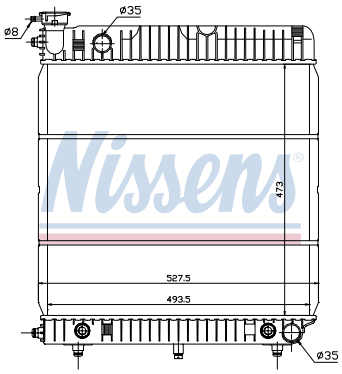

MERCEDES	207 D (77-)
MERCEDES	209 D (76-)
MERCEDES	307 D (77-)
MERCEDES	309 D (68-)
MERCEDES	407 D (81-)
MERCEDES	409 D (77-)

62633

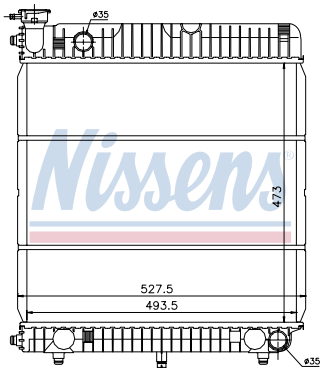

MERCEDES	207 D (77-)
MERCEDES	209 D (76-)
MERCEDES	307 D (77-)
MERCEDES	309 D (68-)
MERCEDES	407 D (81-)
MERCEDES	409 D (77-)

62635

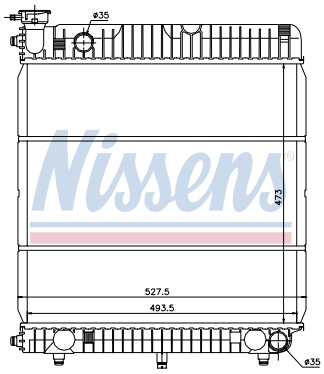

MERCEDES	207 D (77-)
MERCEDES	209 D (76-)
MERCEDES	307 D (77-)
MERCEDES	309 D (68-)
MERCEDES	407 D (81-)
MERCEDES	409 D (77-)

62655

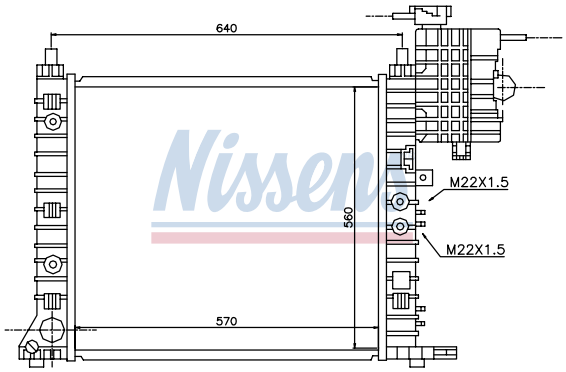

MERCEDES	VITO W 638 (96-)
MERCEDES	SPRINTER (95-)

62677

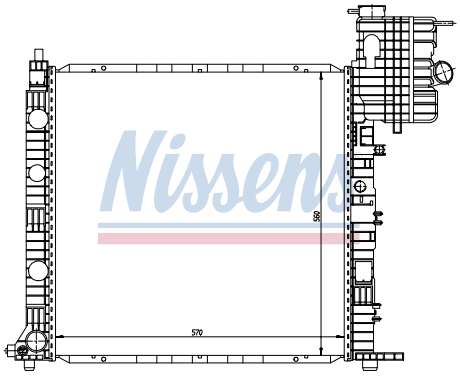

MERCEDES	VITO W 638 (96-)
MERCEDES	VITO W 638 (96-)

62685A

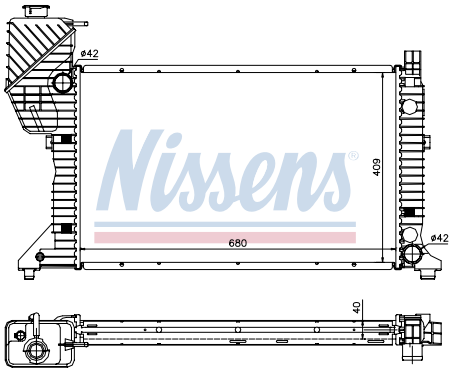

MERCEDES	SPRINTER (95-)

62686A

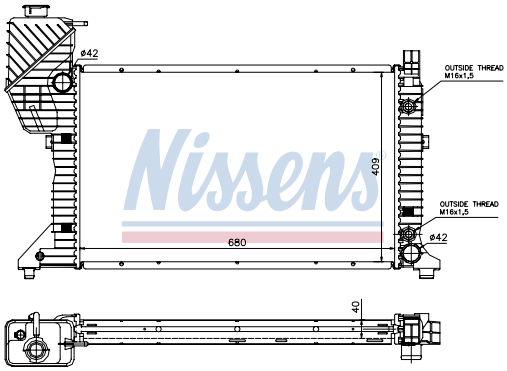

MERCEDES	SPRINTER (95-)

62687A

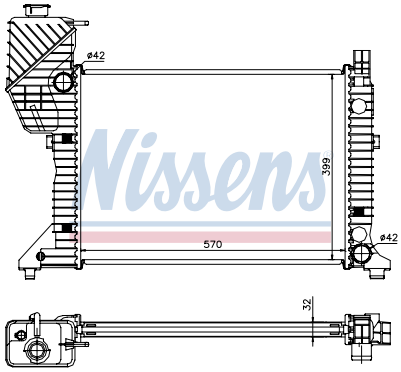

MERCEDES	SPRINTER (95-)

62781A

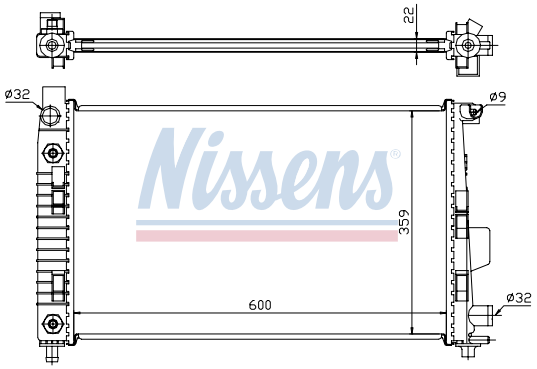

MERCEDES VANEO (02-)
MITSUBISHI PAJERO (90-)

62801

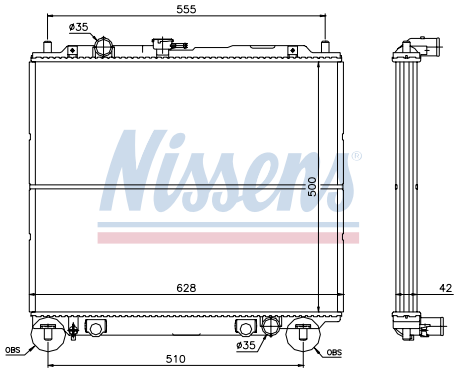

MITSUBISHI SHOGUN (90-)
MITSUBISHI PAJERO (90-)

62802

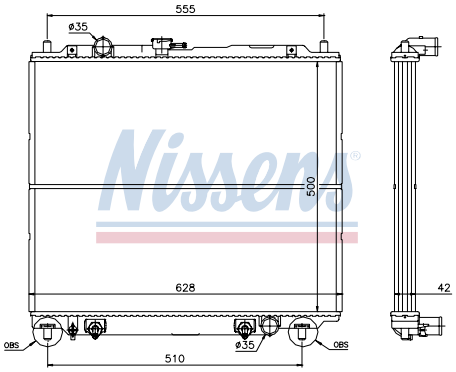

MITSUBISHI SHOGUN (90-)
MITSUBISHI CANTER (86-)

62809

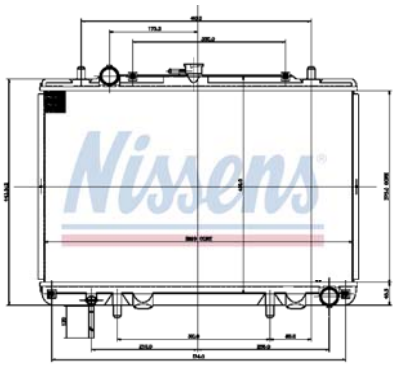

MITSUBISHI L 200 (96-)

62815

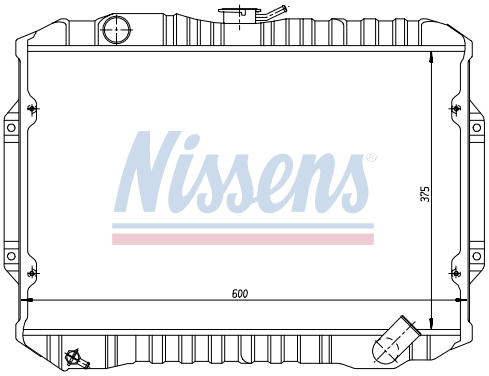

MITSUBISHI L 200 (83-)

62828

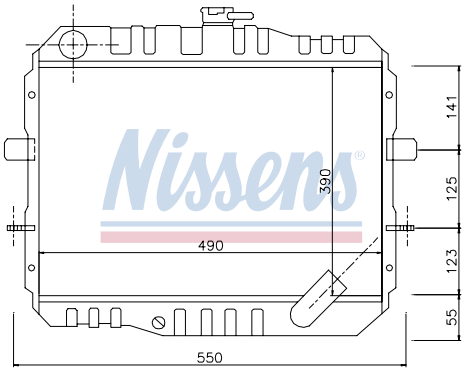

MITSUBISHI L 300 (80-)

62840

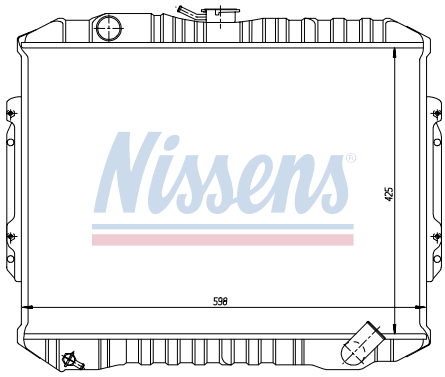

MITSUBISHI **PAJERO (82-)**

62842

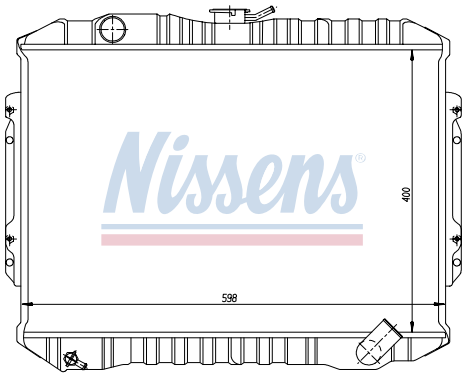

MITSUBISHI **PAJERO (82-)**

62852

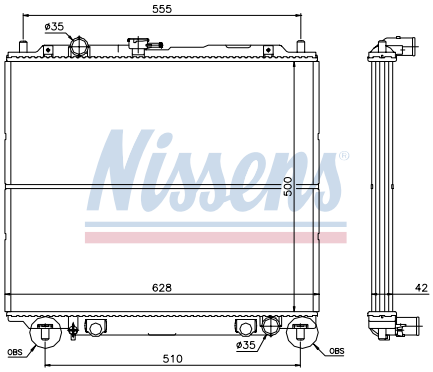

MITSUBISHI **PAJERO (90-)**
MITSUBISHI **SHOGUN (90-)**

62853

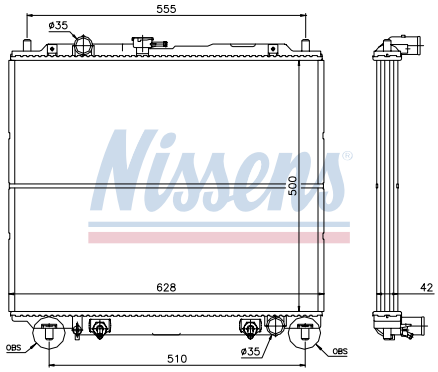

MITSUBISHI **PAJERO (90-)**
MITSUBISHI **SHOGUN (90-)**

62856

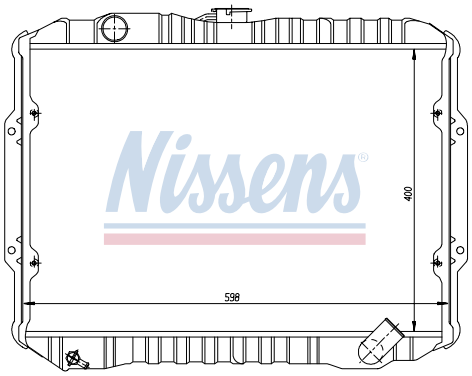

MITSUBISHI **L 200 (87-)**

62882

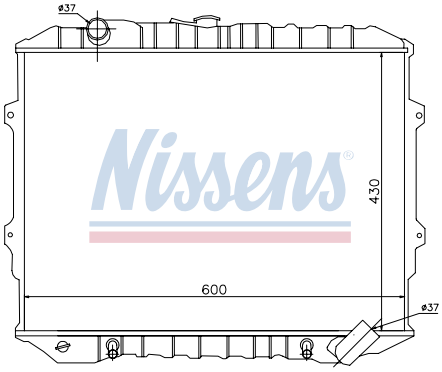

MITSUBISHI **PAJERO (82-)**

62884

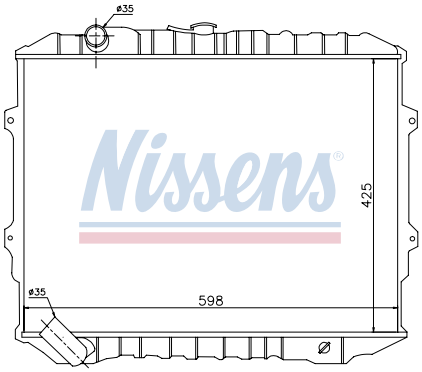

MITSUBISHI PAJERO (82-)
MITSUBISHI PAJERO (90-)
MITSUBISHI SHOGUN (90-)

62892

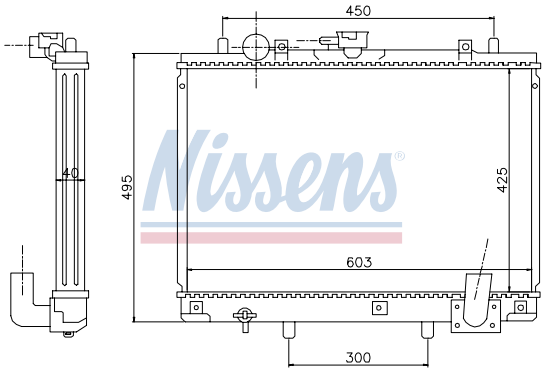

MITSUBISHI L 200 (96-)

62895

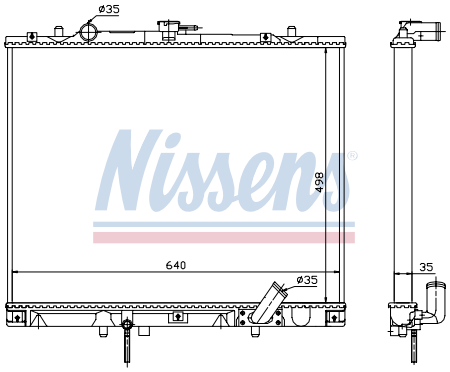

MITSUBISHI L 200 (96-)

62895A

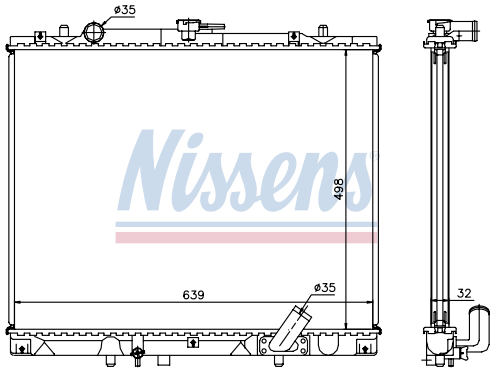

MITSUBISHI L 200 (96-)

62898

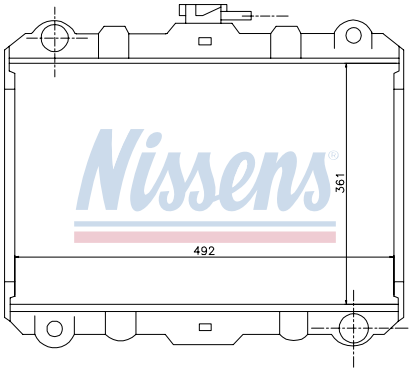

NISSAN TRADE (85-)

62899

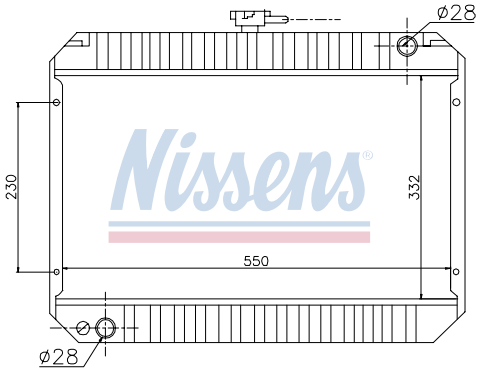

NISSAN VANETTE (86-)

62902A

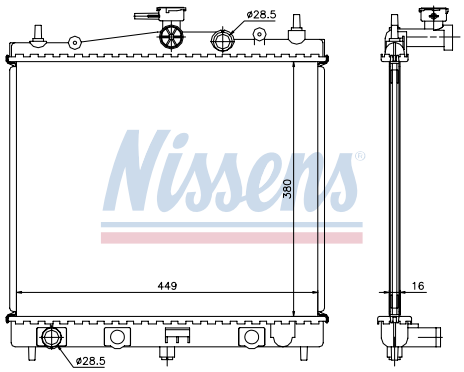

NISSAN	NOTE (06-)
NISSAN	ATLEON (97-)
NISSAN	ECO (97-)

62904

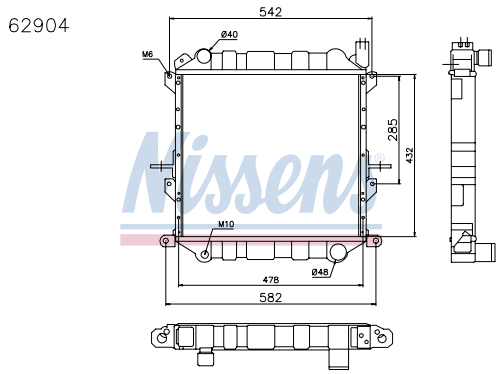

NISSAN	ATLEON (97-)
NISSAN	ECO (97-)

62906

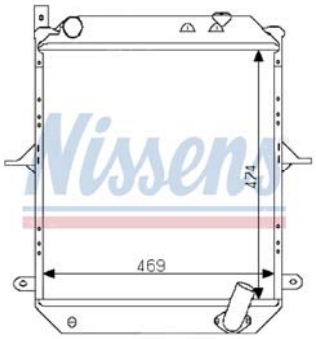

NISSAN	ATLEON (97-)
NISSAN	ECO (97-)

62908A

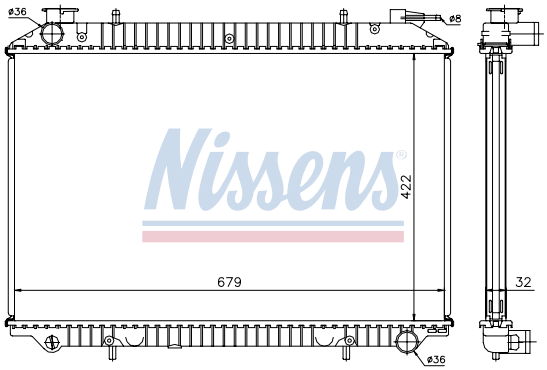

NISSAN	VANETTE (92-)
NISSAN	PATROL (79-)

62911

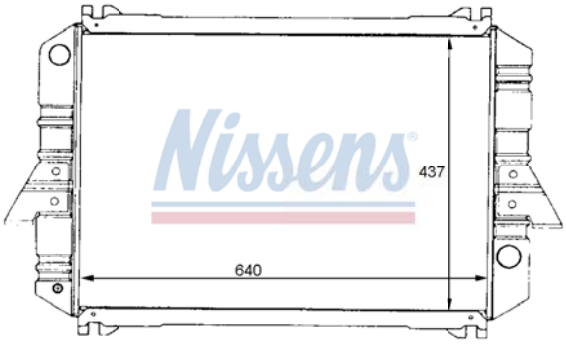

NISSAN	PATROL (79-)

62912

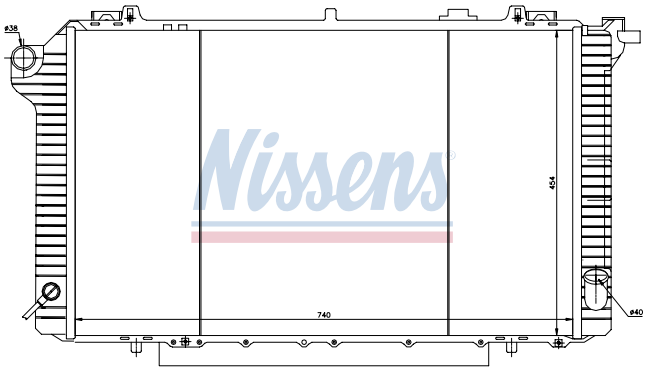

NISSAN	PATROL Y60 (88-)

62913

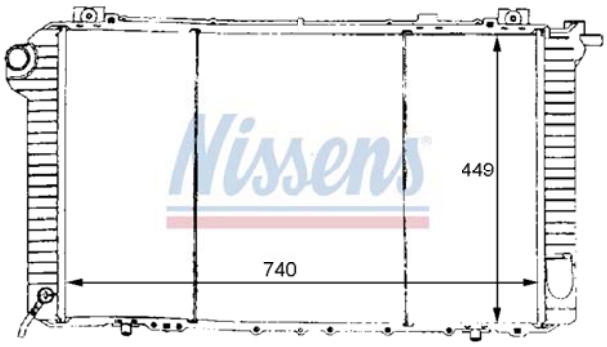

NISSAN PATROL Y60 (88-)

62915

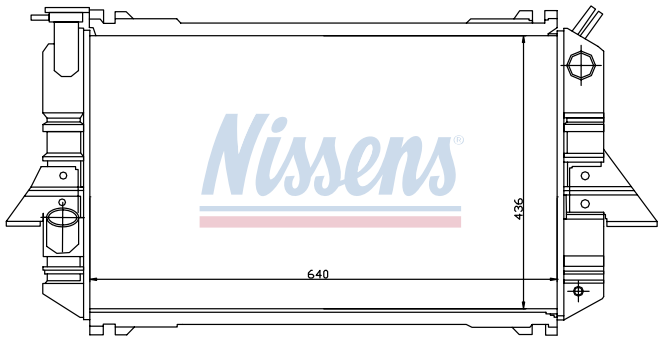

NISSAN PATROL (79-)

62916

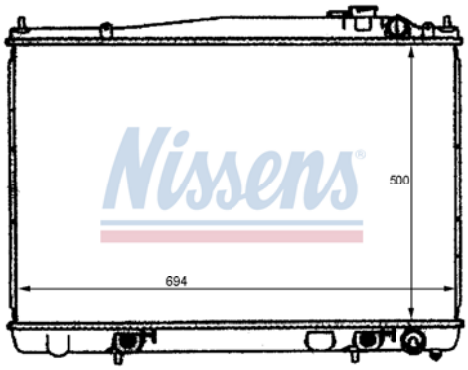

NISSAN PATHFINDER (97-)

62921A

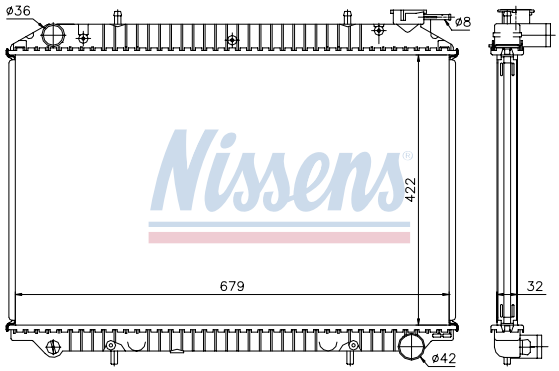

NISSAN VANETTE CARGO (95-)
NISSAN VANETTE (92-)

62929

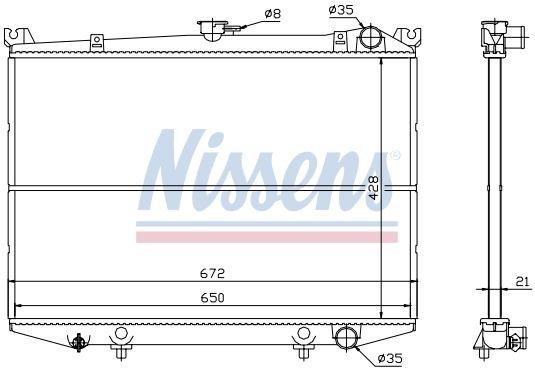

NISSAN KING CAB D21 (85-)
NISSAN PICK UP D21 (85-)
NISSAN TERRANO (86-)
NISSAN TERRANO (87-)

62930

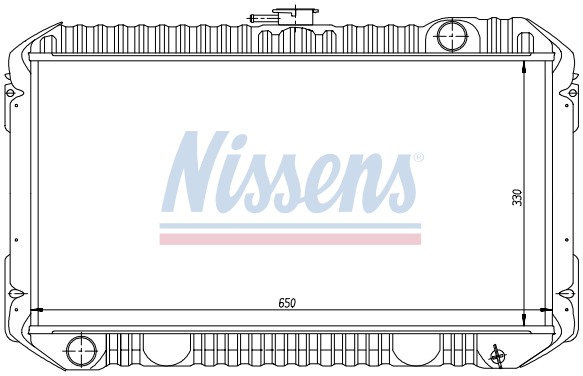

NISSAN KING CAB 720 (82-)
NISSAN PICK UP 720 (82-)

62931

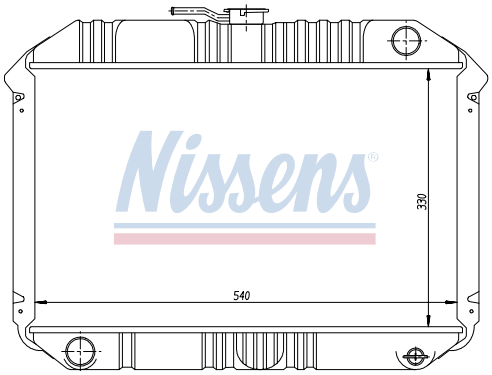

NISSAN KING CAB 720 (82-)
NISSAN PICK UP 720 (82-)

62934

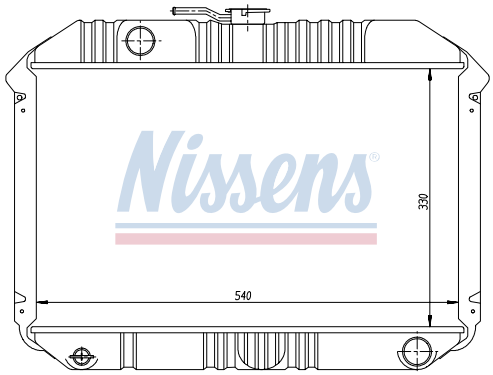

NISSAN KING CAB 720 (82-)
NISSAN PICK UP 720 (82-)

62950

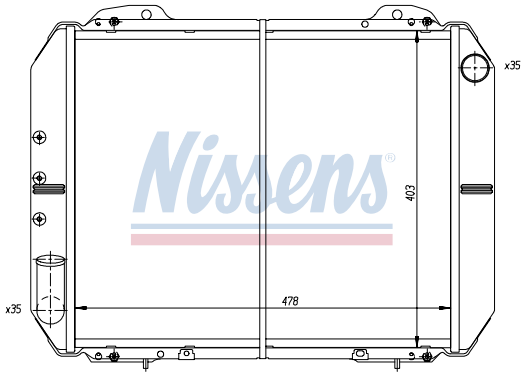

NISSAN VANETTE (86-)

62953A

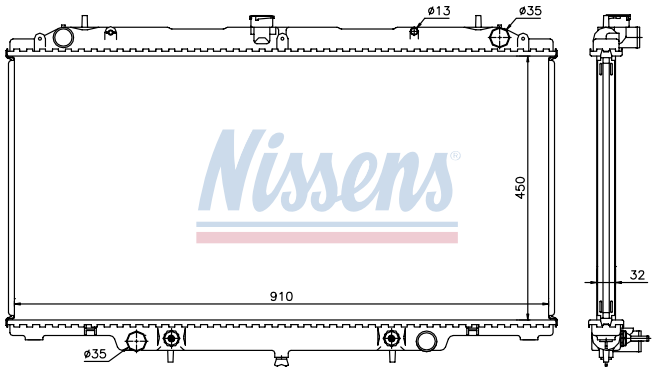

NISSAN PATROL Y61 (97-)
NISSAN SAFARI Y61 (97-)

62958

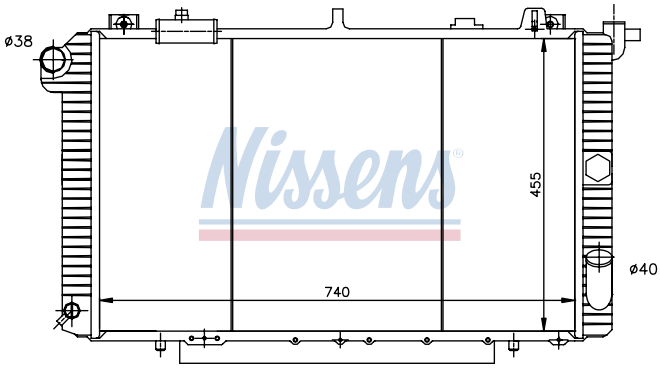

NISSAN PATROL Y60 (88-)

62959

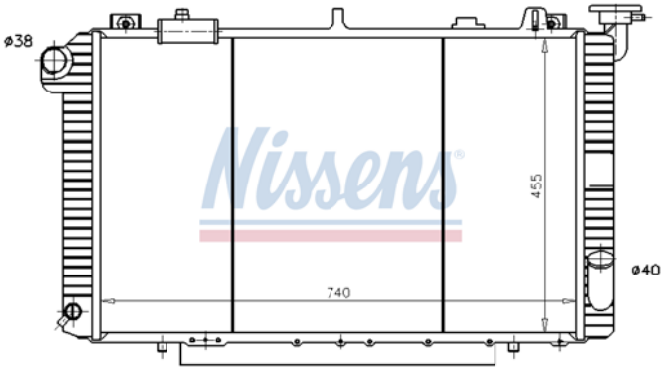

NISSAN PATROL Y60 (88-)

62976A

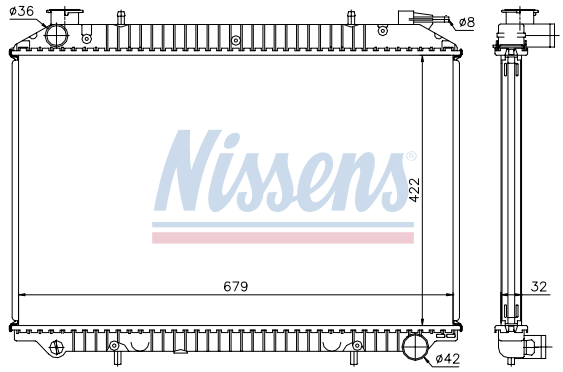

NISSAN	VANETTE CARGO (95-)
NISSAN	VANETTE (92-)

62986

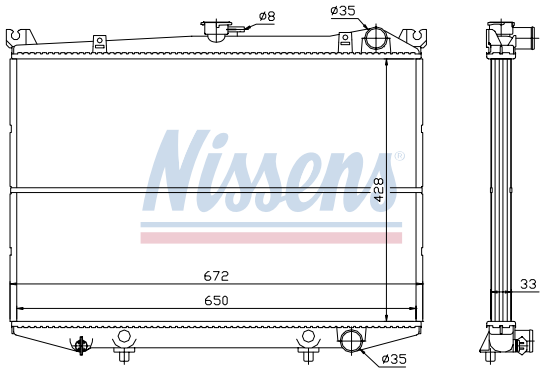

NISSAN	TERRANO (86-)

62988

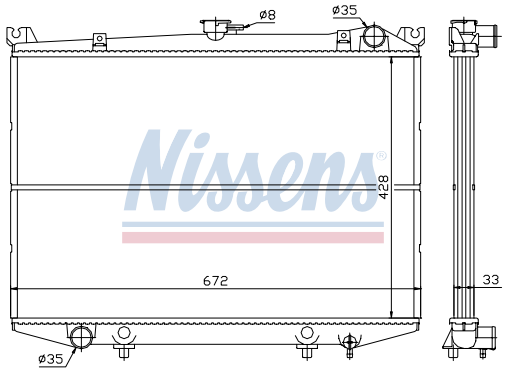

NISSAN	KING CAB D21 (85-)
NISSAN	PICK UP D21 (85-)

63002

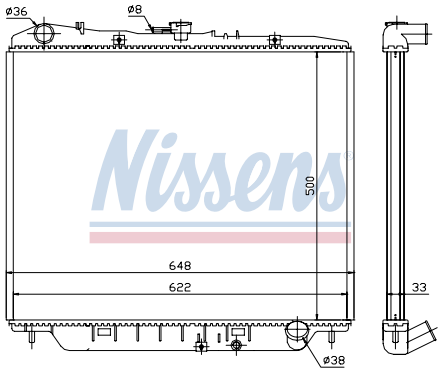

OPEL	MONTEREY (91-)
OPEL	COMBO (00-)

63008A

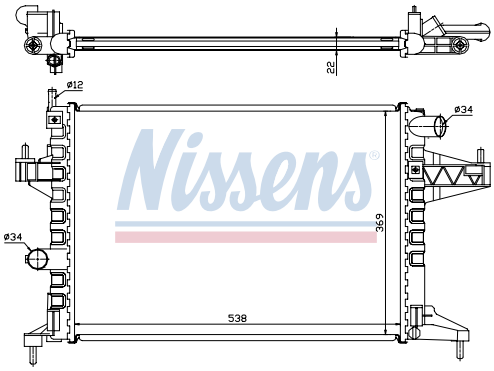

OPEL	COMBO (00-)
OPEL	COMBO (00-)
PONTIAC	G6 (05-)
PONTIAC	G6 (05-)

63023A

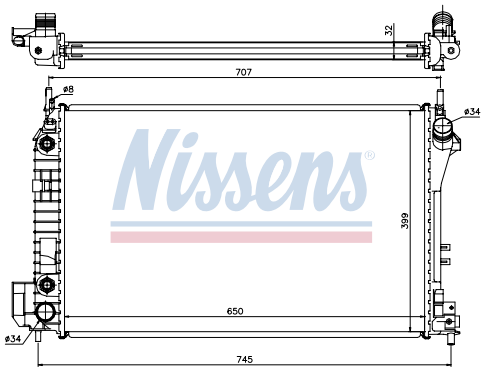

PONTIAC
NISSAN
OPEL
RENAULT

63094

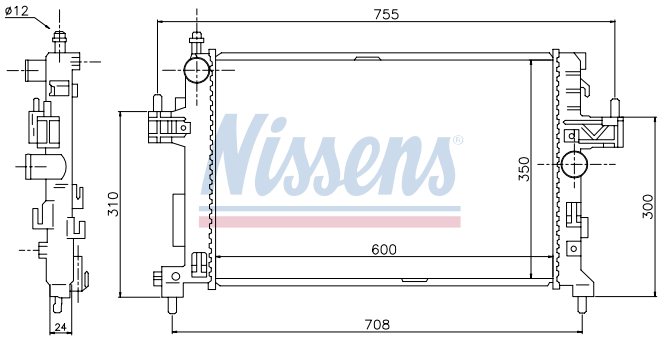

OPEL	COMBO (00-)
PONTIAC	G6 (05-)
PONTIAC	G6 (05-)

63244

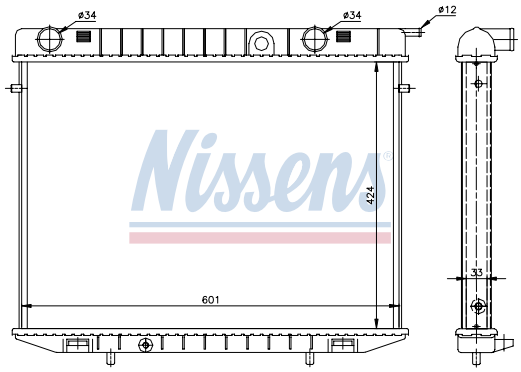

OPEL	FRONTERA A (92-)
OPEL	FRONTERA A (92-)

63254A

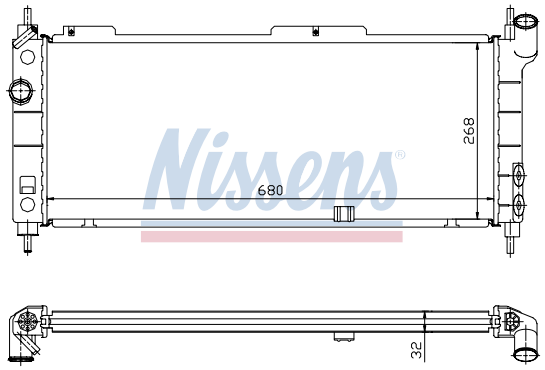

OPEL	COMBO (93-)
LDV (96-)	CONVOY (98-)
OPEL	COMBO (93-)
OPEL	COMBO (93-)

63286

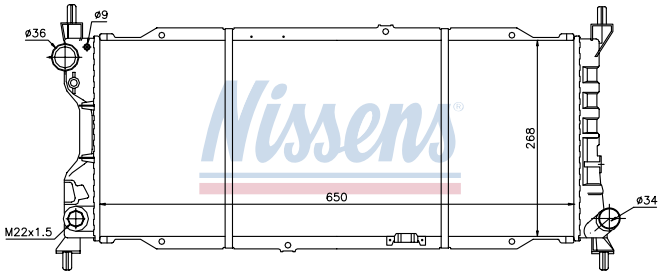

OPEL	COMBO (93-)
OPEL	COMBO (93-)
OPEL	FRONTERA A (92-)

63508A

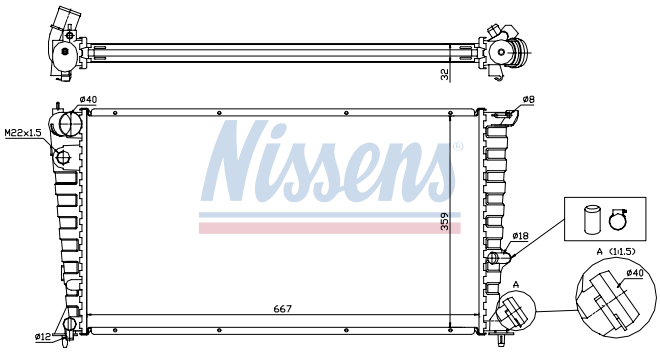

CITROEN	BERLINGO (96-)
PEUGEOT	PARTNER (96-)
CITROEN	BERLINGO (96-)
PEUGEOT	PARTNER (96-)

63546

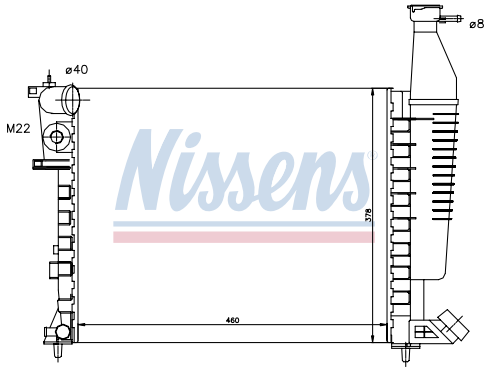

CITROEN	BERLINGO (96-)
PEUGEOT	PARTNER (96-)

63547

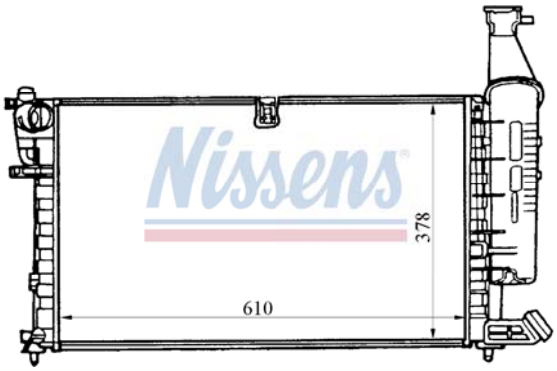

CITROEN	BERLINGO (96-)
PEUGEOT	PARTNER (96-)

63557

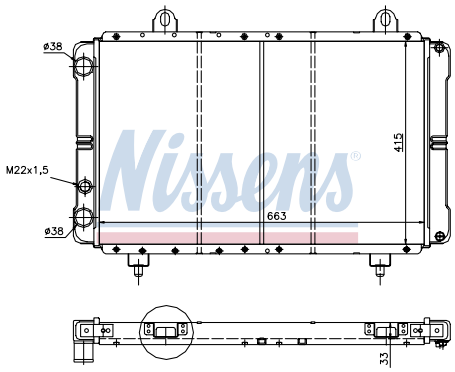

CITROEN	C 25 (81-)
FIAT	DUCATO (81-)
FIAT	TALENTO (89-)
PEUGEOT	J5 (81-)
TALBOT	EXPRESS (81-)

63558

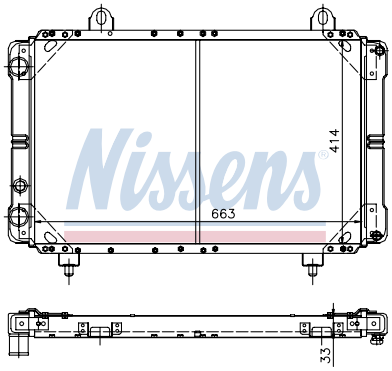

CITROEN	C 25 (81-)
FIAT	DUCATO (81-)
PEUGEOT	J5 (81-)
TALBOT	EXPRESS (81-)
CITROEN	C 25 (81-)
FIAT	DUCATO (81-)

63561

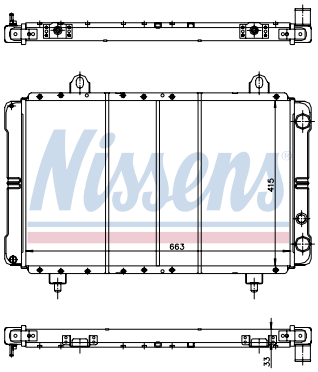

FIAT	TALENTO (89-)
PEUGEOT	J5 (81-)
TALBOT	EXPRESS (81-)
PEUGEOT	J7 (70-)
PEUGEOT	J7 (78-)

63562

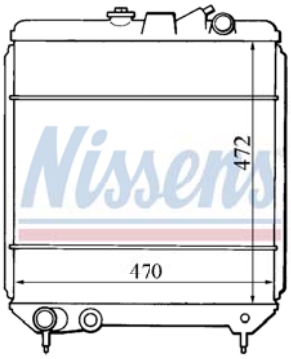

PEUGEOT	J9 (70-)
PEUGEOT	J9 (78-)
CITROEN	C 25 (81-)
FIAT	DUCATO (81-)

63572

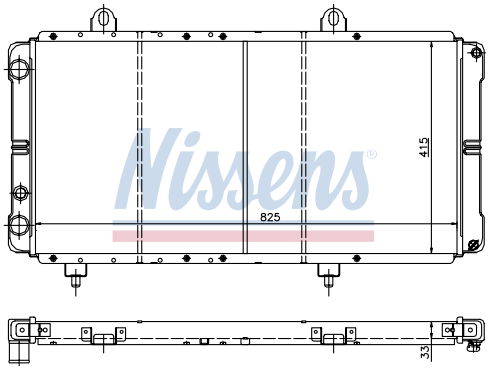

CITROEN	C 25 (81-)
FIAT	DUCATO (81-)
PEUGEOT	J5 (81-)
TALBOT	EXPRESS (81-)
CITROEN	LNA (82-)

63715

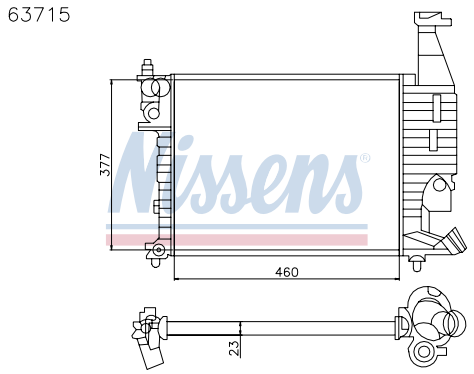

CITROEN	BERLINGO (96-)
PEUGEOT	PARTNER (96-)

63716

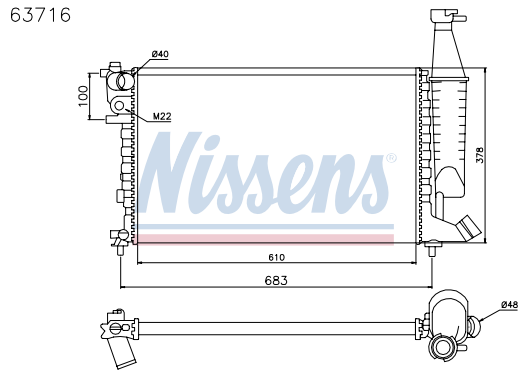

CITROEN	BERLINGO (96-)
PEUGEOT	PARTNER (96-)

63719A

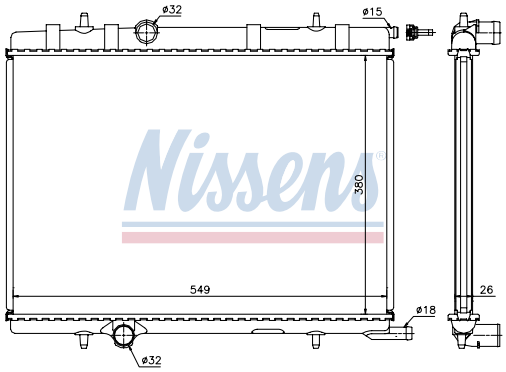

CITROEN	BERLINGO (02-)
PEUGEOT	PARTNER (02-)
VOLKSWAGEN	TOUAREG (02-)
NISSAN	INTERSTAR (02-)
OPEL	ARENA (98-)

63761

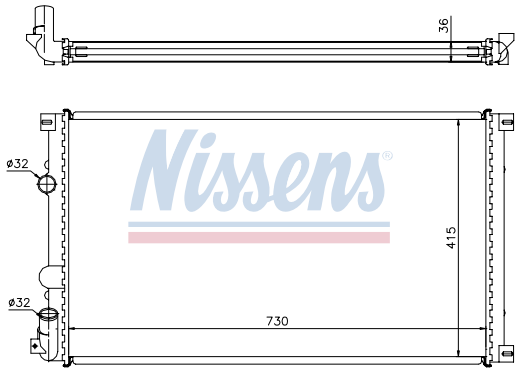

OPEL	MOVANO (98-)
RENAULT	MASTER (98-)
NISSAN	KUBISTAR (03-)
RENAULT	KANGOO (98-)

63763

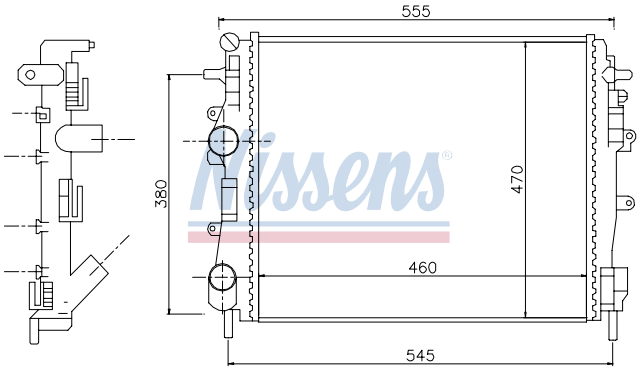

NISSAN	KUBISTAR (03-)
RENAULT	KANGOO (98-)

63768

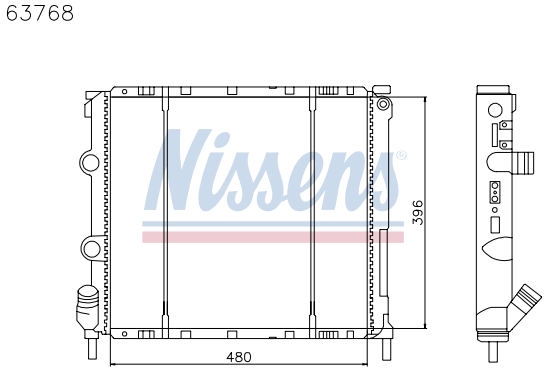

RENAULT	KANGOO (98-)
NISSAN	KUBISTAR (03-)

637931

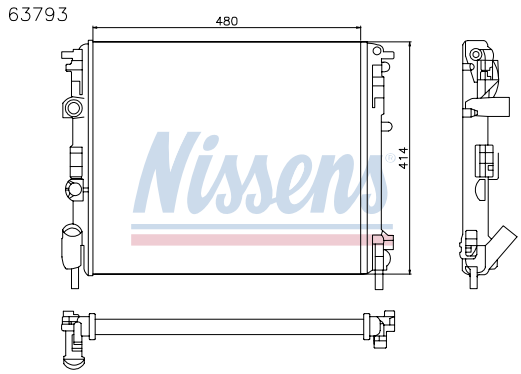

RENAULT
NISSAN

63812A

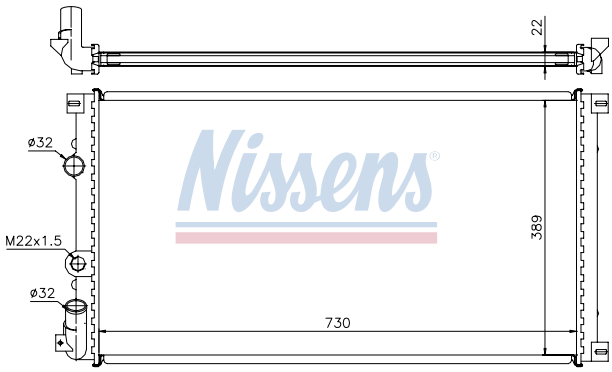

NISSAN
OPEL
OPEL
RENAULT

INTERSTAR (02-)
ARENA (98-)
MOVANO (98-)
MASTER (98-)

63817

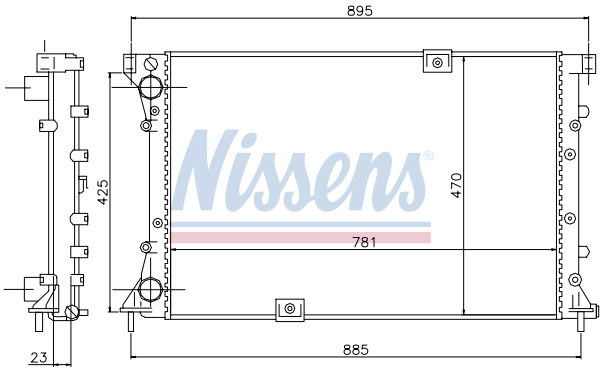

NISSAN
OPEL
RENAULT

PRIMASTAR (02-)
VIVARO (01-)
TRAFIC (01-)

63818

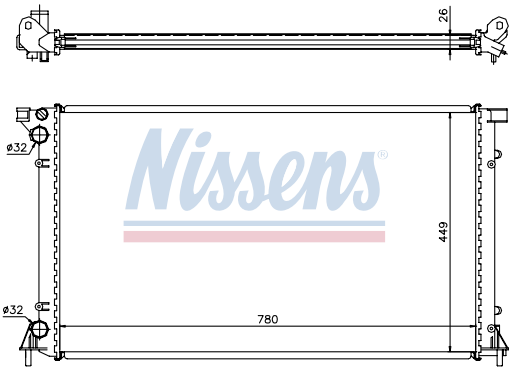

NISSAN
OPEL
RENAULT

PRIMASTAR (02-)
VIVARO (01-)
TRAFIC (01-)

63819

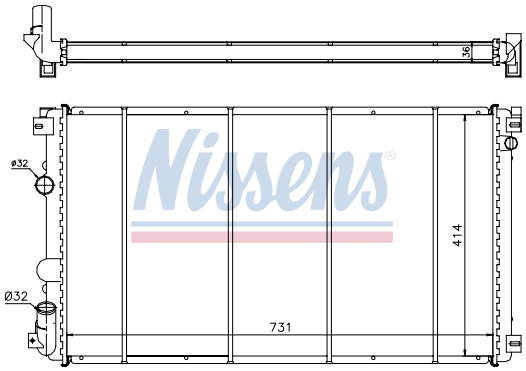

NISSAN
OPEL
RENAULT

INTERSTAR (02-)
MOVANO (98-)
MASTER (98-)

63823

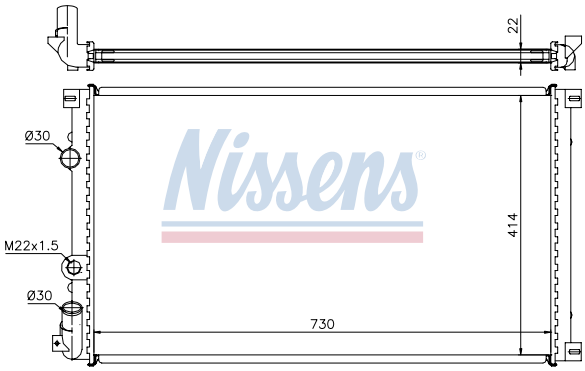

NISSAN
OPEL
OPEL
RENAULT

INTERSTAR (02-)
ARENA (98-)
MOVANO (98-)
MASTER (98-)

63824A

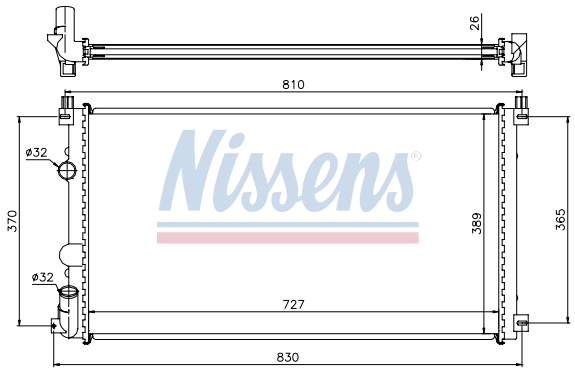

NISSAN	INTERSTAR (02-)
OPEL	ARENA (98-)
OPEL	MOVANO (98-)
RENAULT	MASTER (98-)

63834

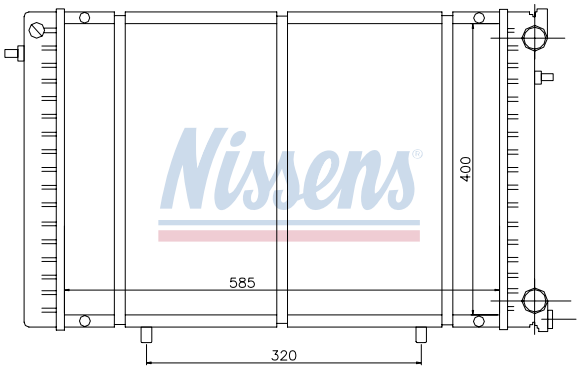

RENAULT	TRAFIC (89-)

63850

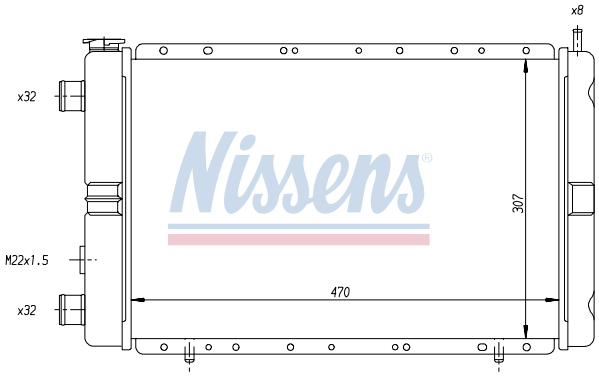

RENAULT	TRAFIC (80-)
NISSAN	KUBISTAR (03-)
RENAULT	KANGOO (98-)

63855A

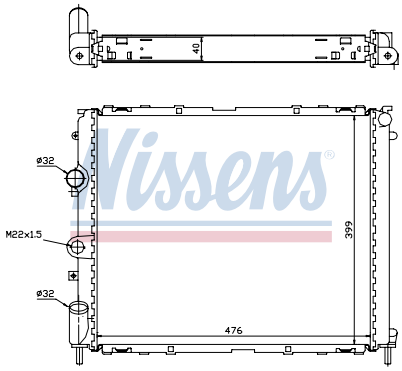

RENAULT	KANGOO (98-)
RENAULT	TRAFIC (80-)
RENAULT	EXPRESS (85-)

63867

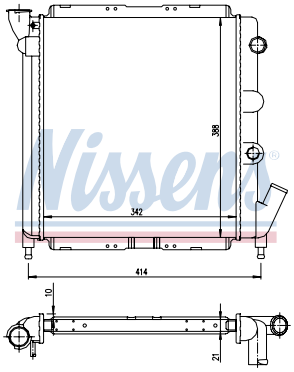

RENAULT	EXTRA (85-)
RENAULT	RAPID (85-)
RENAULT	TRAFIC (80-)
NISSAN	KUBISTAR (03-)
RENAULT	KANGOO (98-)

63886

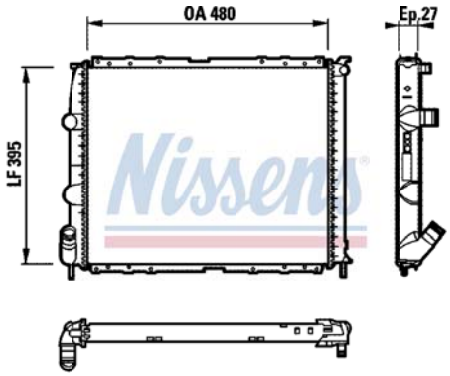

RENAULT	KANGOO (98-)
RENAULT	TRAFIC (89-)

63892

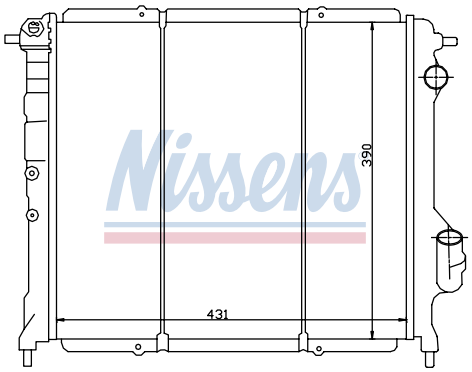

RENAULT	EXPRESS (91-)
RENAULT	EXTRA (91-)
RENAULT	RAPID (91-)

63894

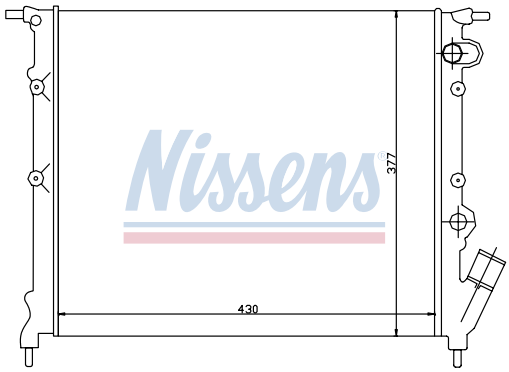

RENAULT	EXPRESS (91-)
RENAULT	EXTRA (91-)
RENAULT	RAPID (91-)

63900

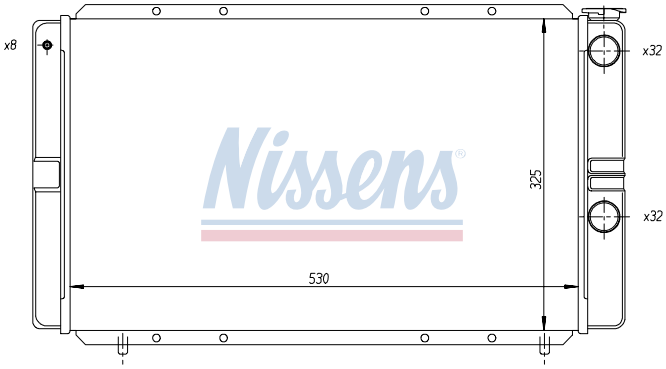

RENAULT	TRAFIC (80-)

63906

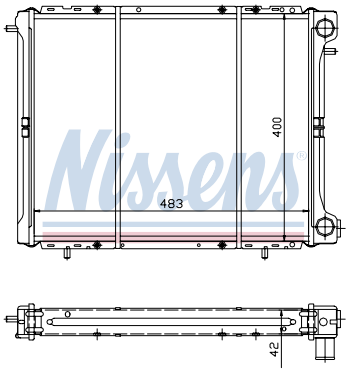

RENAULT	TRAFIC (89-)
RENAULT	TRAFIC (89-)

63912A

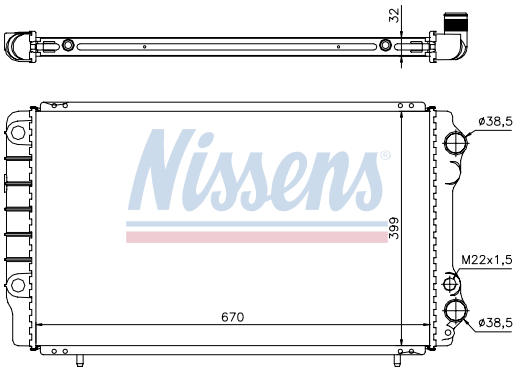

RENAULT	TRAFIC (97-)
RENAULT	RAPID (91-)

63922

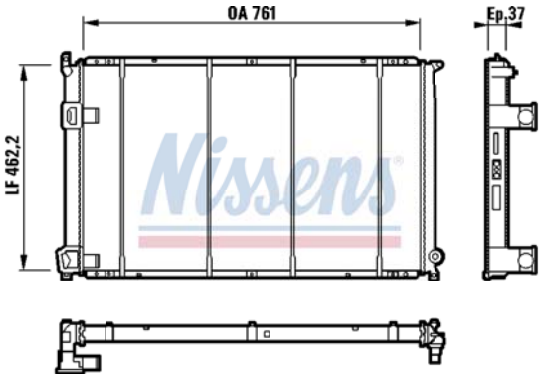

OPEL	ARENA (98-)
OPEL	MOVANO (98-)
RENAULT	MASTER (98-)

63924A

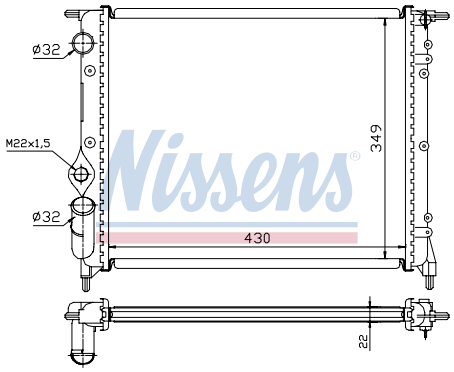

RENAULT	EXPRESS (91-)
RENAULT	EXTRA (91-)
RENAULT	RAPID (91-)
RENAULT	EXPRESS (91-)
RENAULT	EXTRA (91-)

63934A

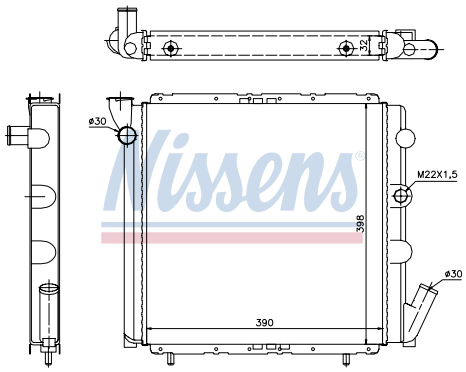

RENAULT	EXPRESS (85-)
RENAULT	EXTRA (85-)
RENAULT	RAPID (85-)
RENAULT	MASTER (98-)
NISSAN	INTERSTAR (02-)

63936A

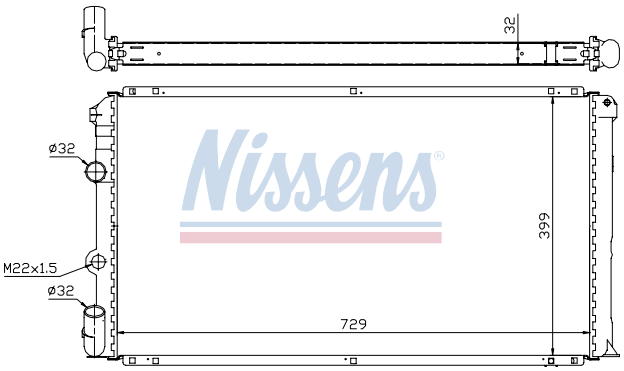

OPEL	ARENA (98-)
OPEL	MOVANO (98-)
RENAULT	MASTER (98-)
NISSAN	KUBISTAR (03-)

639371

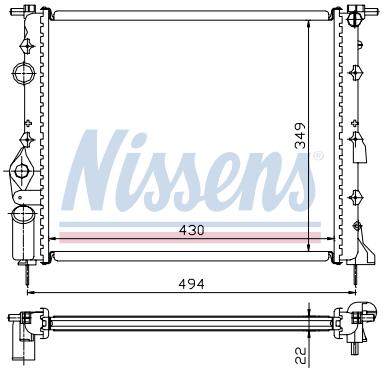

RENAULT	
NISSAN	

63968A

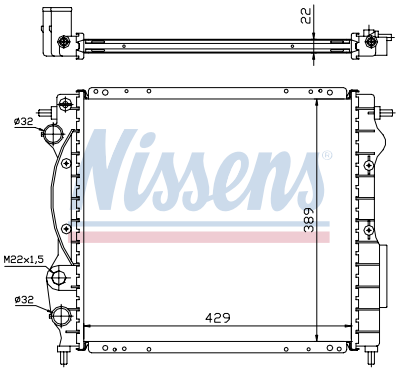

RENAULT	EXPRESS (91-)
RENAULT	EXTRA (91-)
RENAULT	RAPID (91-)
NISSAN	KUBISTAR (03-)

63985

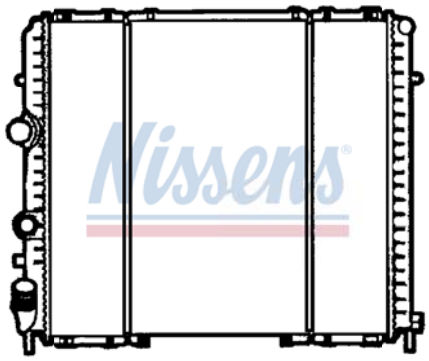

RENAULT	KANGOO (98-)
RENAULT	B (83-)

63990

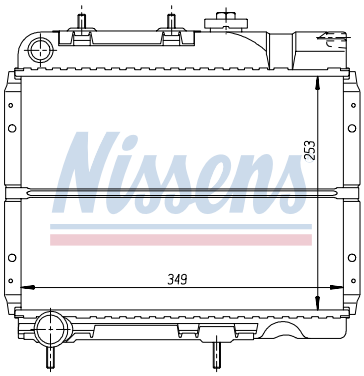

RENAULT	RODEO (70-)
SEAT	INCA (95-)
VOLKSWAGEN	CADDY (95-)

63995A

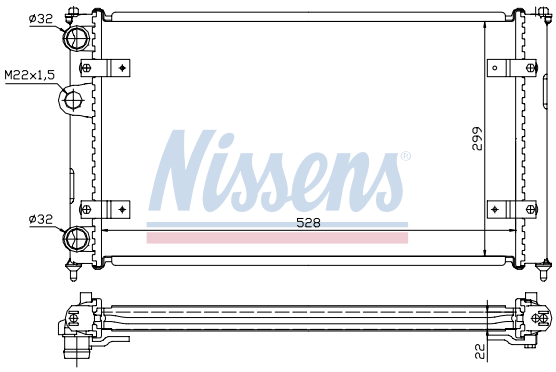

SEAT	INCA (95-)
VOLKSWAGEN	CADDY (95-)
SEAT	INCA (95-)
VOLKSWAGEN	CADDY (95-)
SEAT	INCA (95-)
VOLKSWAGEN	CADDY (95-)

64613

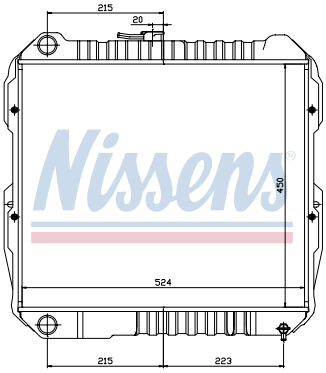

TOYOTA	HI-LUX (84-)

64622A

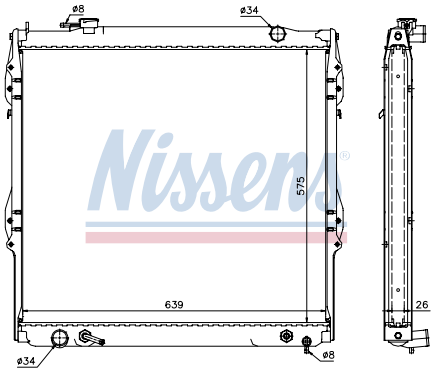

TOYOTA	TACOMA (95-)

64623A

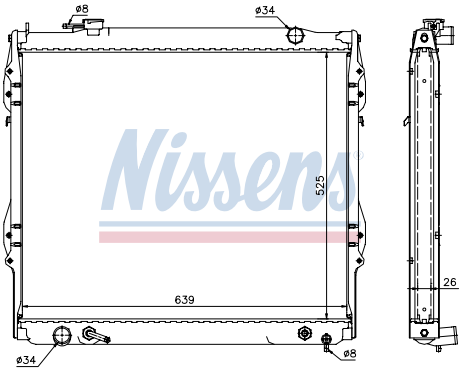

TOYOTA	TACOMA (95-)

64624A

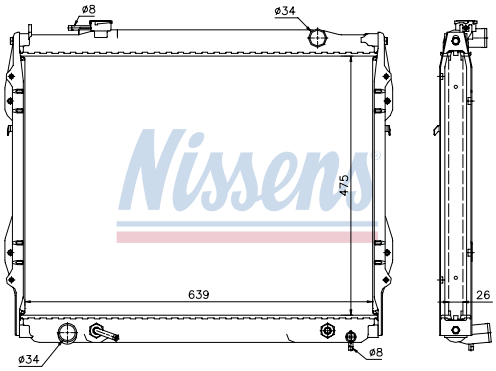

TOYOTA	TACOMA (95-)

64626A

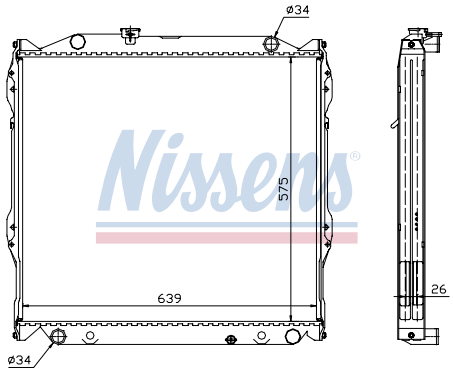

TOYOTA 4 RUNNER (95-)
TOYOTA LAND CRUISER 90 (96-)

64627A

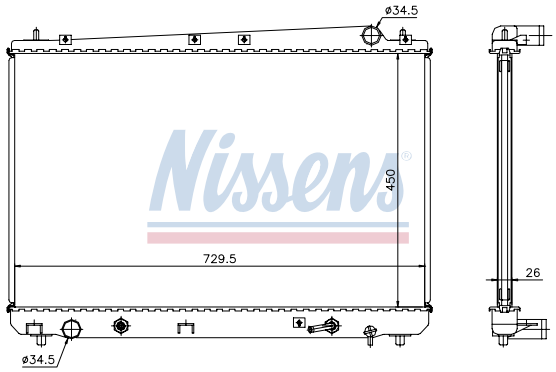

TOYOTA SIENNA (97-)

64636A

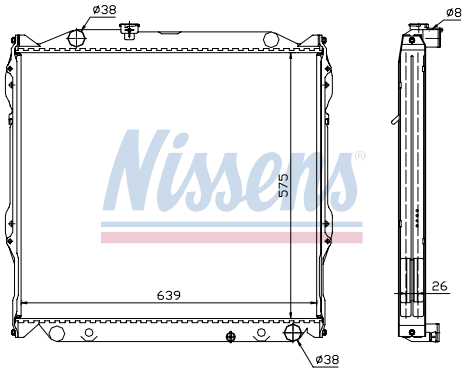

TOYOTA LAND CRUISER 90 (96-)

64637A

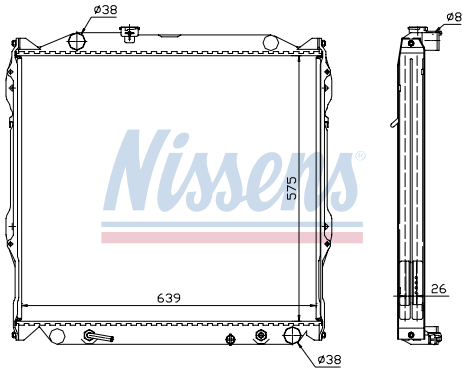

TOYOTA LAND CRUISER 90 (96-)

64649A

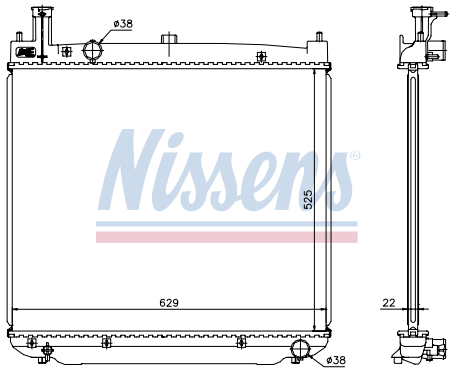

TOYOTA HI-ACE (01-)

64650

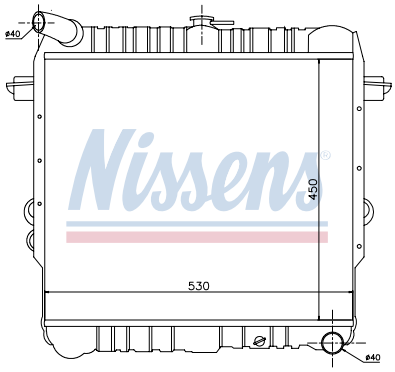

TOYOTA LAND CRUISER 70 (84-)

64698

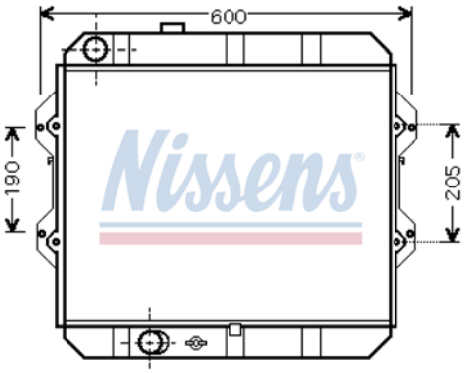

TOYOTA HI-LUX (97-)

64707

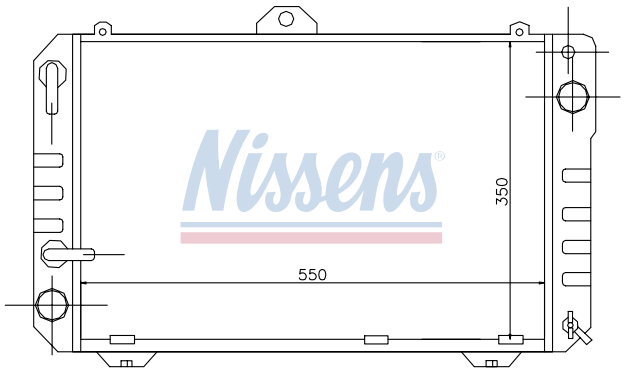

TOYOTA LITE-ACE (92-)

64708

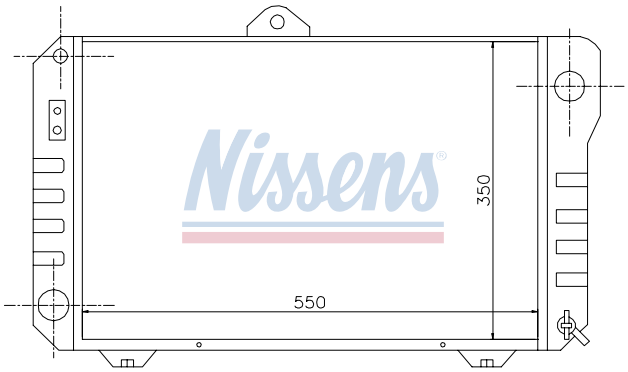

TOYOTA LITE-ACE (85-)

64709

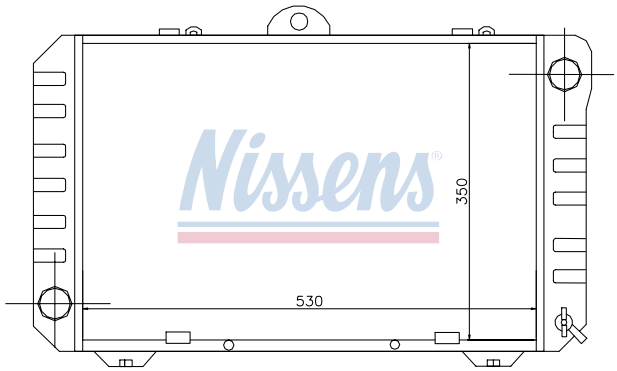

TOYOTA LITE-ACE (85-)

64728

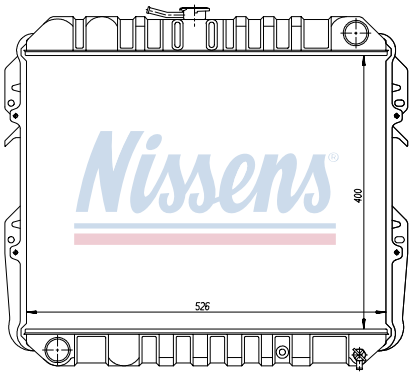

TOYOTA 4 RUNNER (85-)
TOYOTA HI-LUX (84-)
TOYOTA HI-LUX (88-)

64733

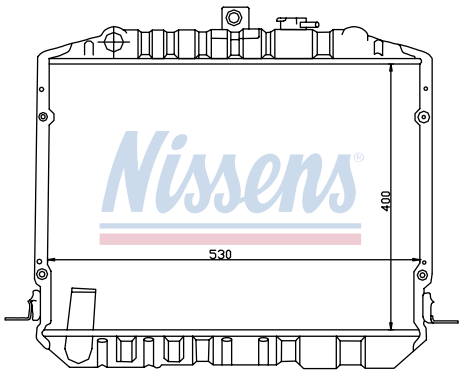

TOYOTA HI-ACE (84-)

64737

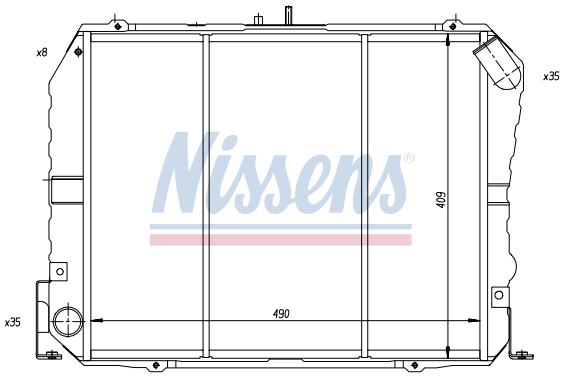

TOYOTA HI-ACE (89-)

64751

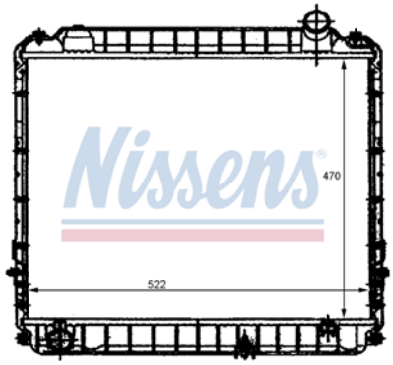

TOYOTA DYNA 200 (95-)

64752

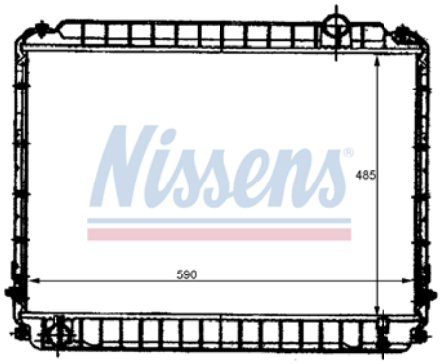

TOYOTA DYNA 200 (95-)

647551

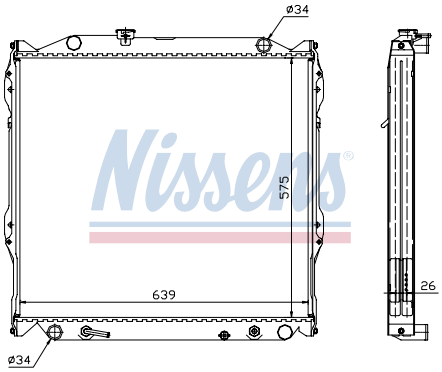

TOYOTA 4 RUNNER (95-)
TOYOTA LAND CRUISER 90 (96-)

64755A

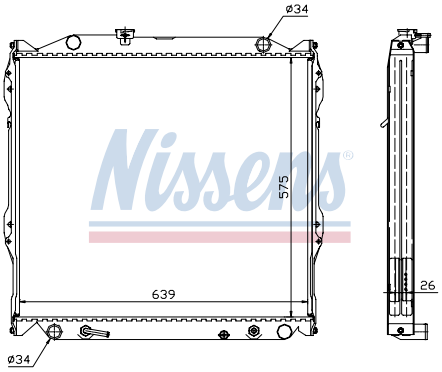

TOYOTA 4 RUNNER (95-)
TOYOTA LAND CRUISER 90 (96-)

64774

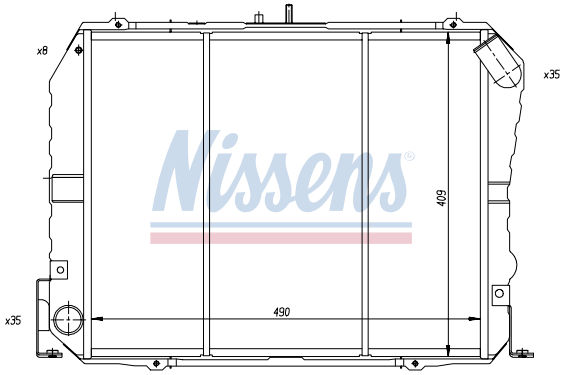

TOYOTA HI-ACE (89-)

64778

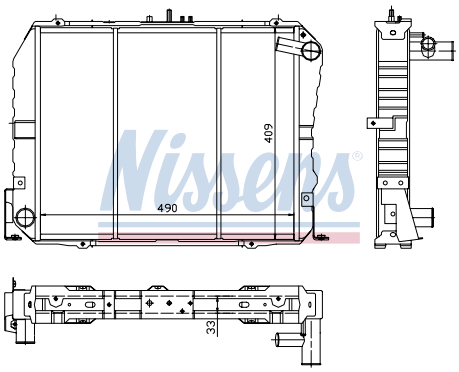

TOYOTA HI-ACE (89-)

64817

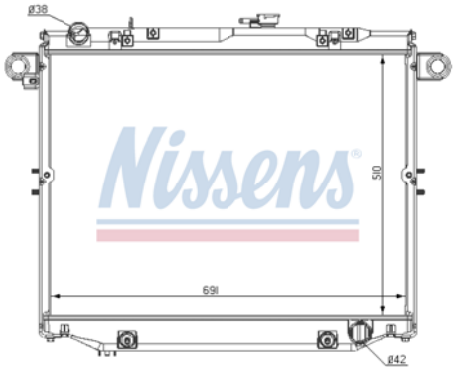

TOYOTA LAND CRUISER 100 (98-)

64818

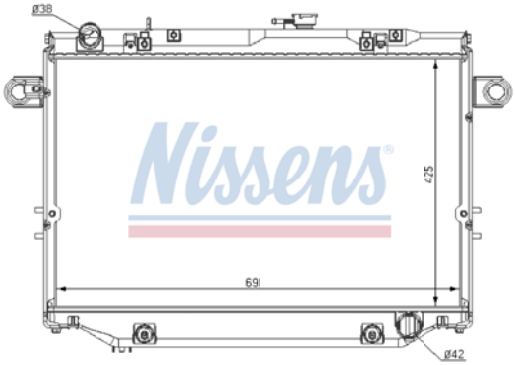

TOYOTA LAND CRUISER 100 (98-)

64844

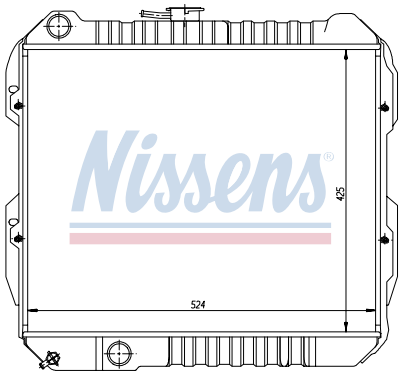

TOYOTA 4 RUNNER (85-)

64845

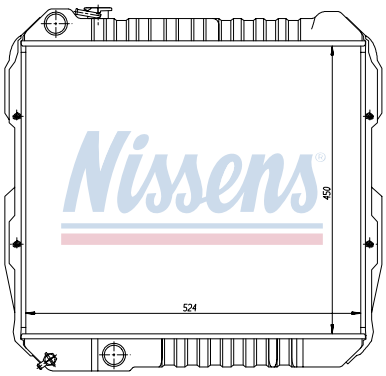

TOYOTA HI-LUX (88-)
VOLKSWAGEN TARO (89-)

64846

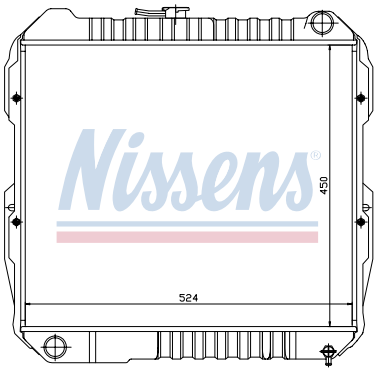

TOYOTA 4 RUNNER (85-)
TOYOTA HI-LUX (88-)

64847

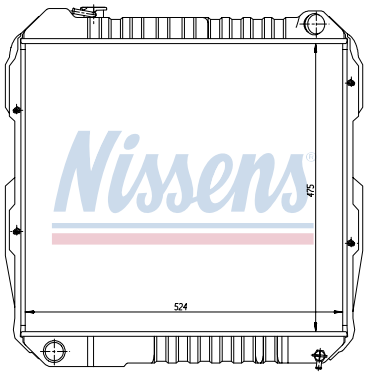

TOYOTA 4 RUNNER (85-)
TOYOTA HI-LUX (88-)

64848

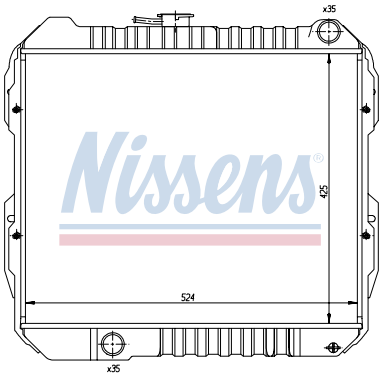

TOYOTA 4 RUNNER (85-)

64857A

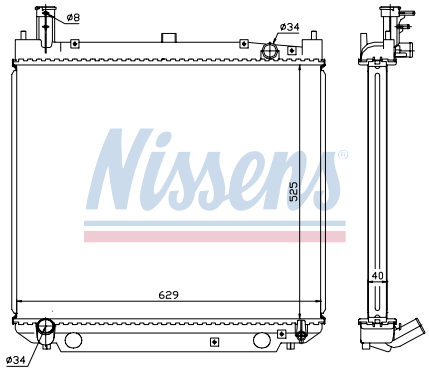

TOYOTA HI-ACE (95-)

64858A

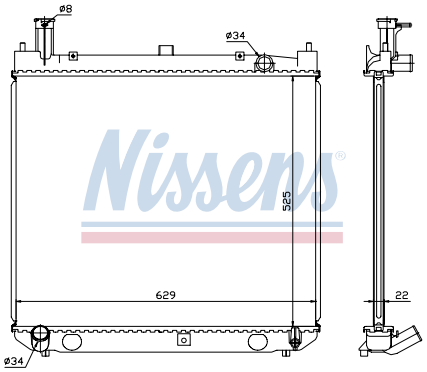

TOYOTA HI-ACE (95-)

64859A

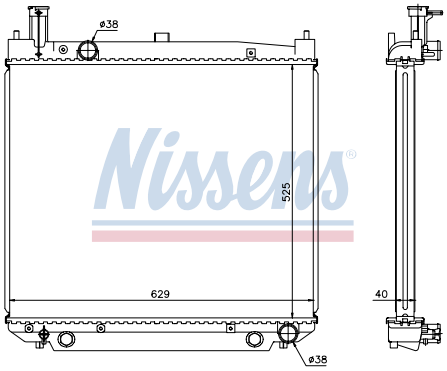

TOYOTA HI-ACE (95-)

64861

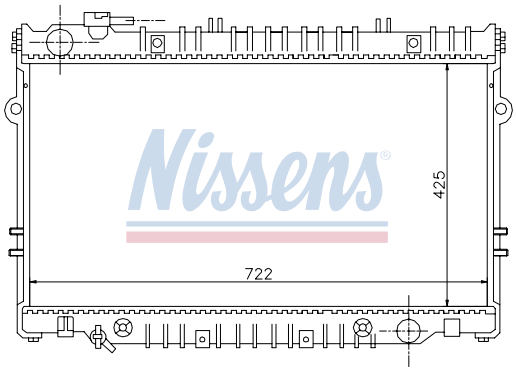

TOYOTA LAND CRUISER 80 (90-)

64862

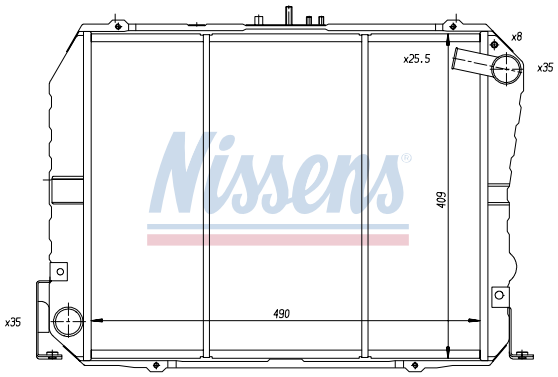

TOYOTA HI-ACE (89-)

64869

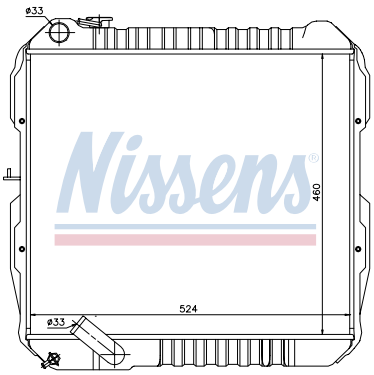

TOYOTA 4 RUNNER (85-)

64882

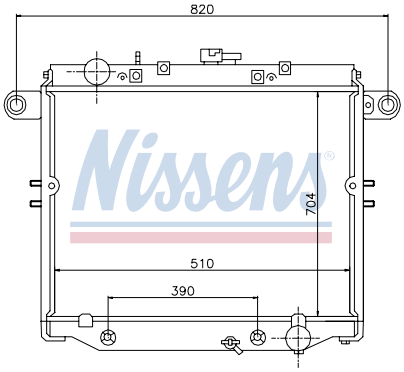

TOYOTA LAND CRUISER 100 (98-)

651511

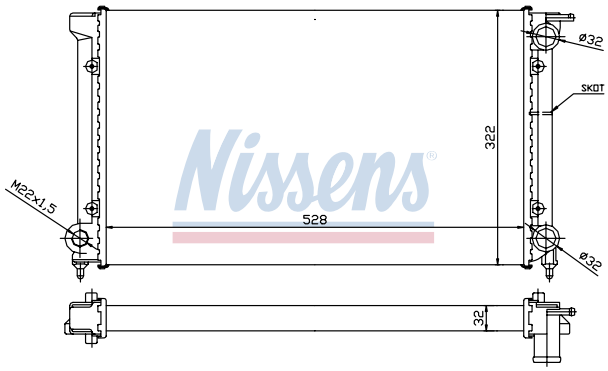

VOLKSWAGEN

65231A

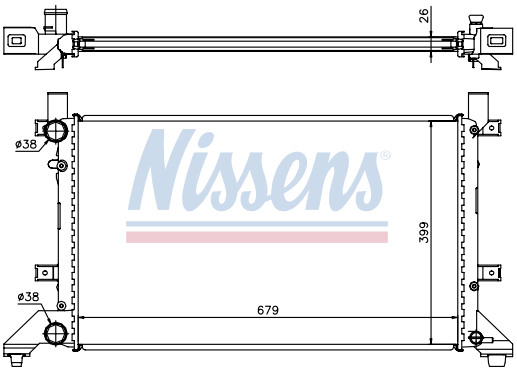

VOLKSWAGEN LT (03-)
VOLKSWAGEN TRANSPORTER T4 (90-)

65239

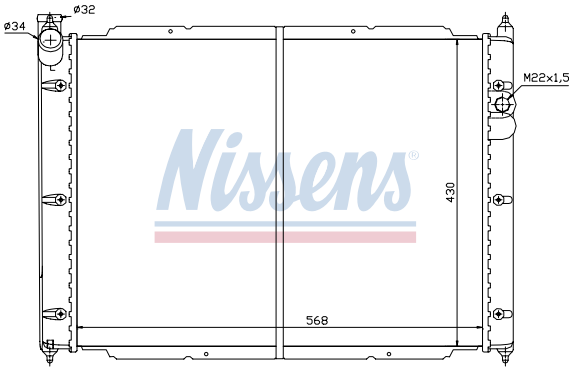

VOLKSWAGEN TRANSPORTER T3 (79-)

65242A

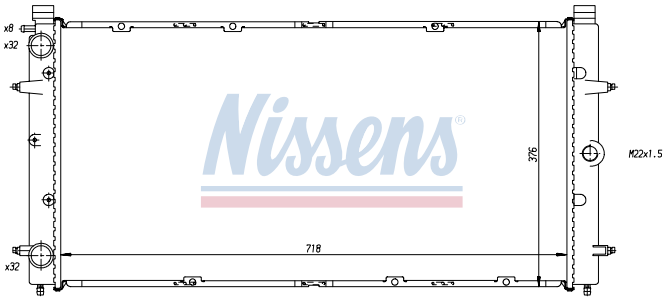

VOLKSWAGEN	TRANSPORTER T4 (90-)

65244A

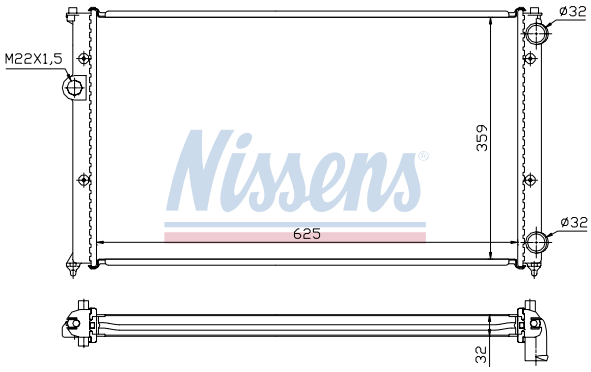

SEAT	INCA (95-)
VOLKSWAGEN	CADDY (95-)
SEAT	INCA (95-)
VOLKSWAGEN	CADDY (95-)
SEAT	INCA (95-)
VOLKSWAGEN	CADDY (95-)

652551

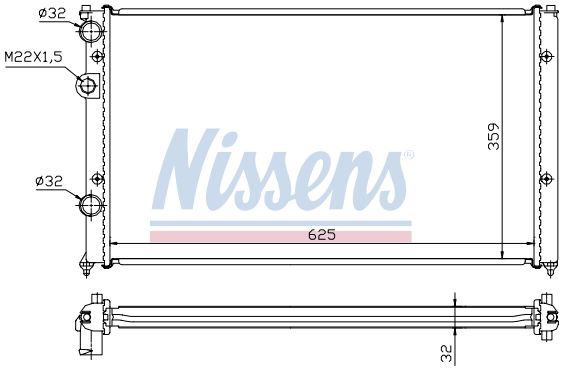

SEAT	INCA (95-)
VOLKSWAGEN	CADDY (95-)
SEAT	INCA (95-)
VOLKSWAGEN	CADDY (95-)
VOLKSWAGEN	CADDY (82-)
SEAT	INCA (95-)
VOLKSWAGEN	CADDY (95-)

65268A

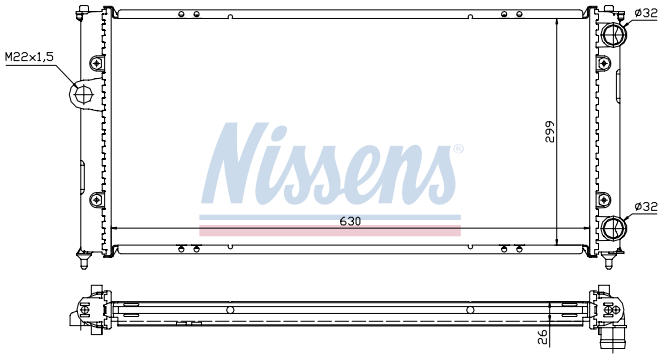

SEAT	INCA (95-)
VOLKSWAGEN	CADDY (95-)
VOLKSWAGEN	TRANSPORTER T4 (90-)
VOLKSWAGEN	TOUAREG (02-)
VOLKSWAGEN	TOUAREG (02-)
VOLKSWAGEN	CADDY (04-)

65277

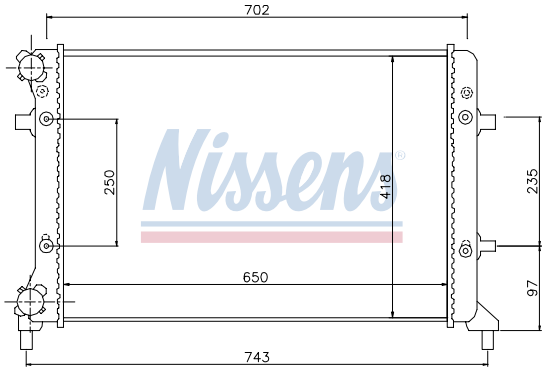

VOLKSWAGEN	TOURAN (03-)
VOLKSWAGEN	TOURAN (03-)
VOLKSWAGEN	TOURAN (03-)
SEAT	INCA (95-)
VOLKSWAGEN	CADDY (95-)
KIA	K-SERIE (01-)
KIA	K-SERIE (01-)

67015

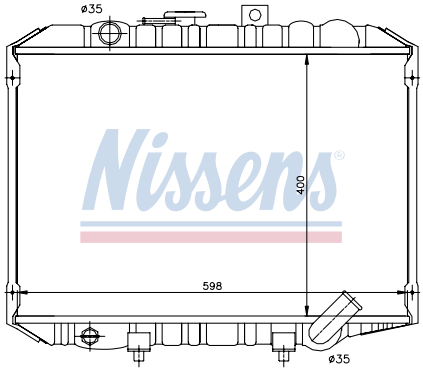

HYUNDAI	H-100 PORTER (93-)
HYUNDAI	GALLOPER (91-)

67018

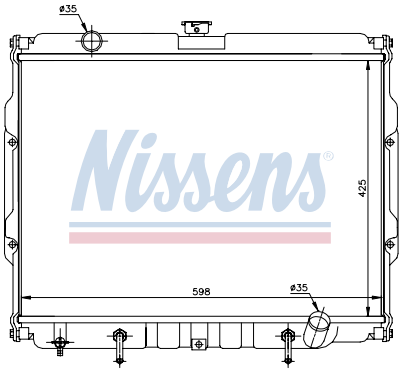

HYUNDAI GALLOPER (91-)

67034

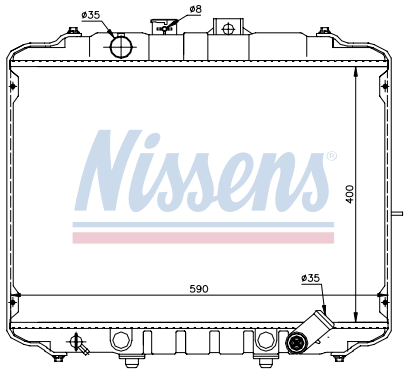

HYUNDAI H-100 MINI BUS (93-)
HYUNDAI H-100 MINI BUS (93-)

67037

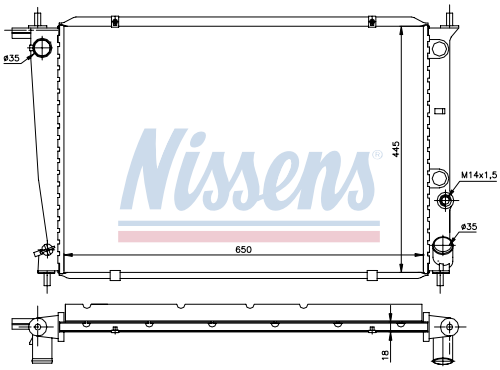

HYUNDAI H-200 (97-)
HYUNDAI H1 (97-)

67038

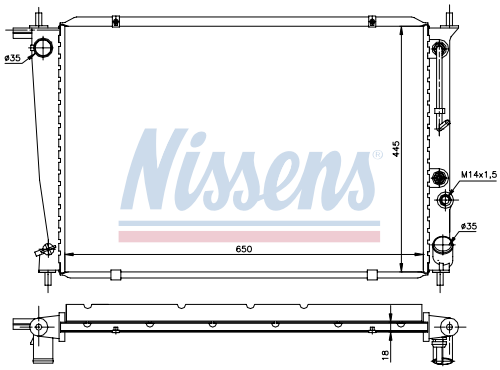

HYUNDAI H-200 (97-)
HYUNDAI H1 (97-)

670381

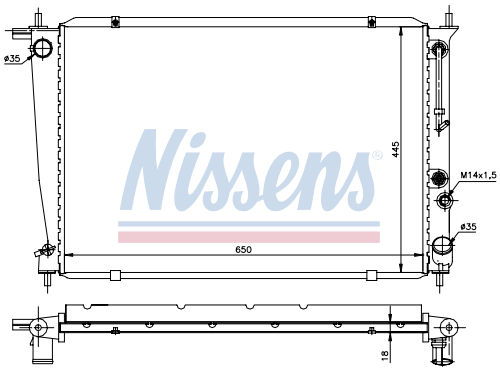

HYUNDAI H1 (97-)

67039

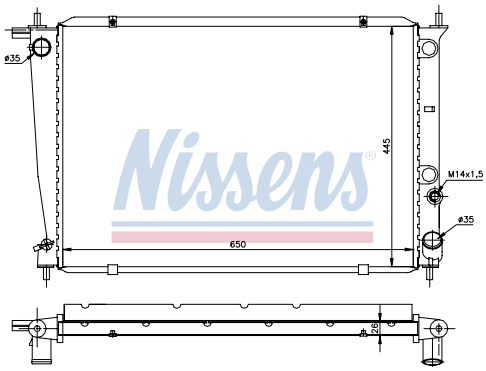

HYUNDAI H-200 (97-)
HYUNDAI H1 (97-)

67040

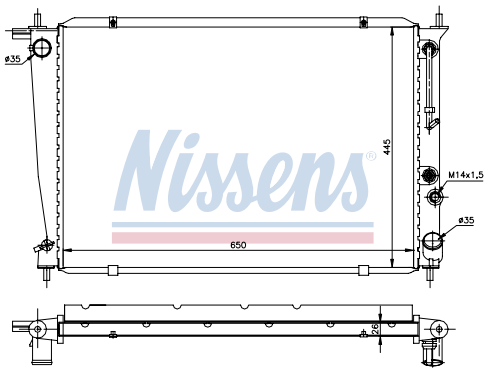

HYUNDAI H-200 (97-)
HYUNDAI H1 (97-)

670401

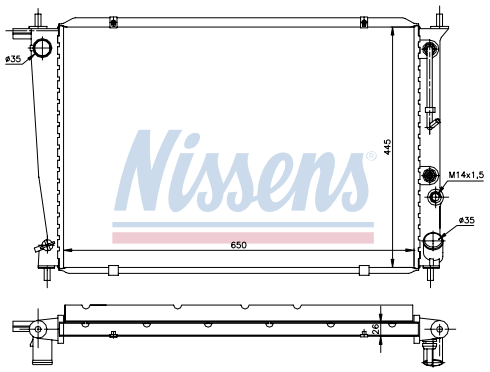

HYUNDAI H1 (97-)

67041

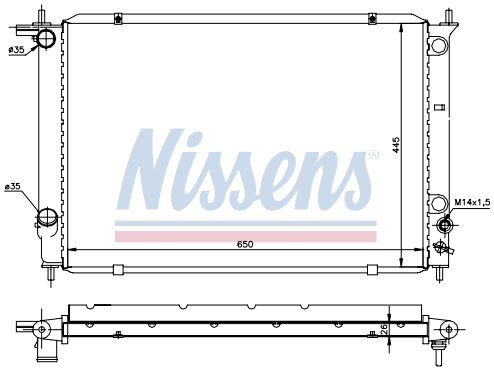

HYUNDAI H-200 (97-)

67042

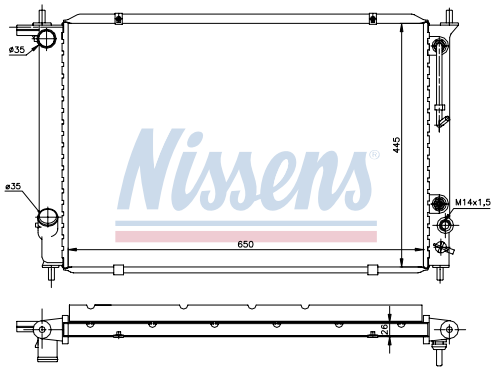

HYUNDAI H-200 (97-)

67043

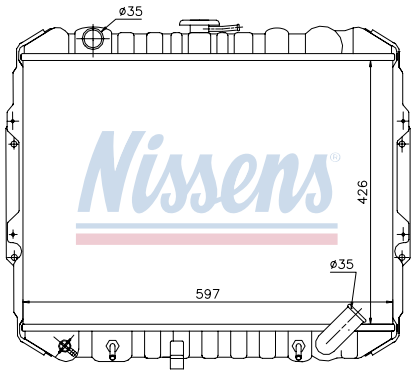

HYUNDAI GALLOPER (91-)

67046

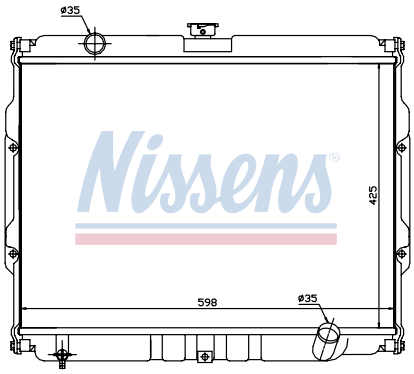

HYUNDAI GALLOPER (91-)
HYUNDAI GALLOPER (98-)

67047

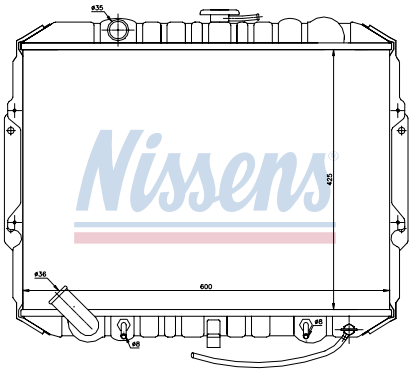

HYUNDAI	GALLOPER (91-)

673001

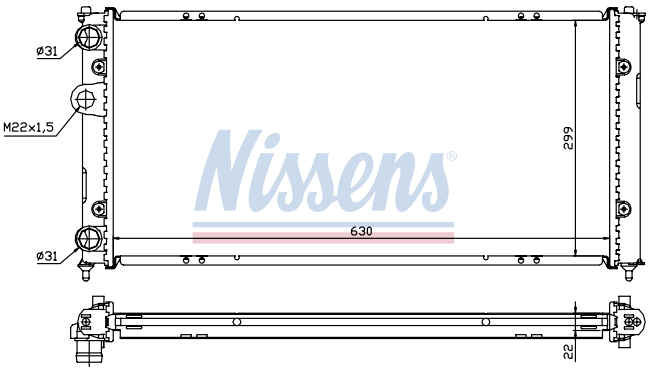

VOLKSWAGEN	CADDY (95-)
VOLKSWAGEN	CADDY (95-)
SEAT	INCA (95-)
VOLKSWAGEN	CADDY (95-)
SEAT	INCA (95-)
VOLKSWAGEN	CADDY (95-)

67327

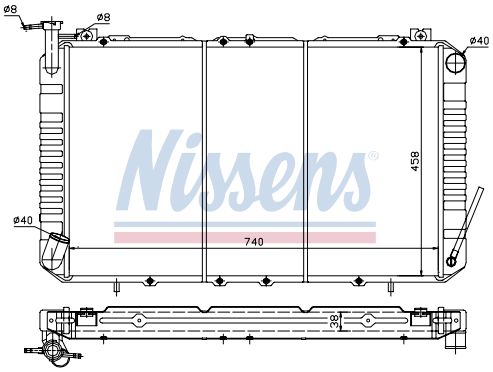

NISSAN	PATROL Y60 (88-)

67353

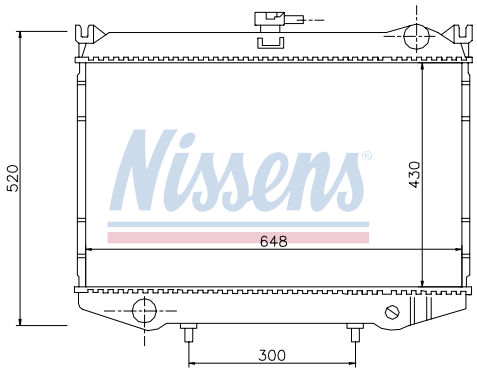

NISSAN	KING CAB D21 (85-)
NISSAN	PICK UP D21 (85-)
NISSAN	TERRANO (87-)

67354A

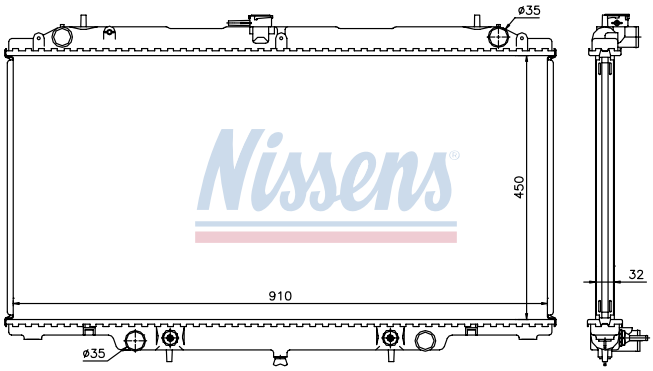

NISSAN	PATROL Y61 (97-)
NISSAN	SAFARI Y61 (97-)

67356

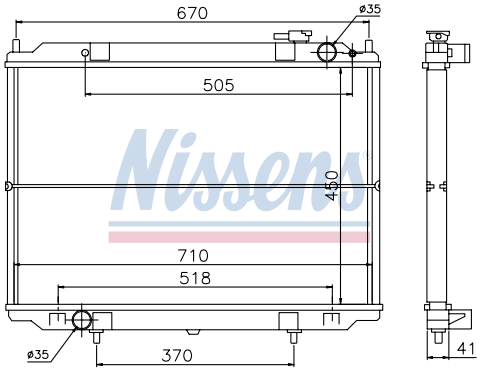

NISSAN	KING CAB D22 (98-)
NISSAN	PICK UP D22 (98-)

67357

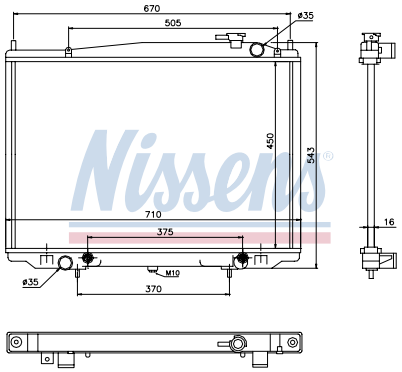

NISSAN — KING CAB D22 (98-)
NISSAN — PICK UP D22 (98-)

67358

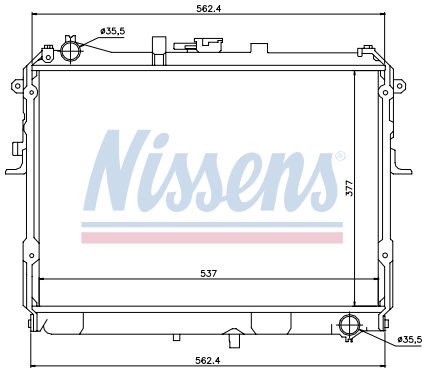

MAZDA — E 2000 D (99-)
MAZDA — E 2200 D (99-)

67490

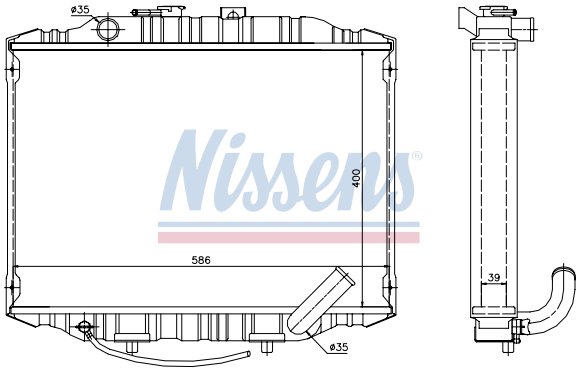

HYUNDAI — STAREX (93-)
HYUNDAI — H-100 PORTER (97-)

67497

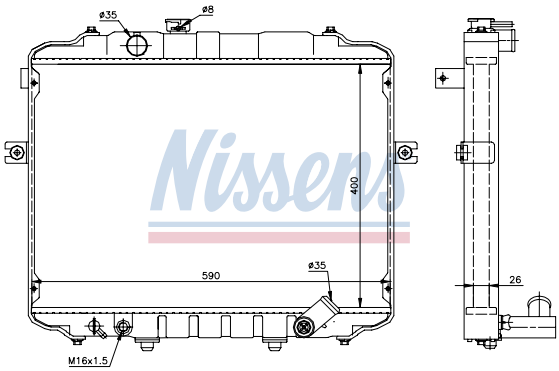

HYUNDAI — STAREX (93-)
HYUNDAI — H-100 PORTER (97-)

67498

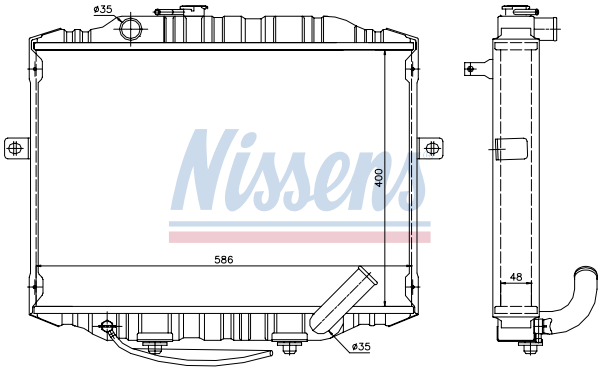

HYUNDAI — STAREX (93-)
HYUNDAI — H-100 MINI BUS (93-)

67499

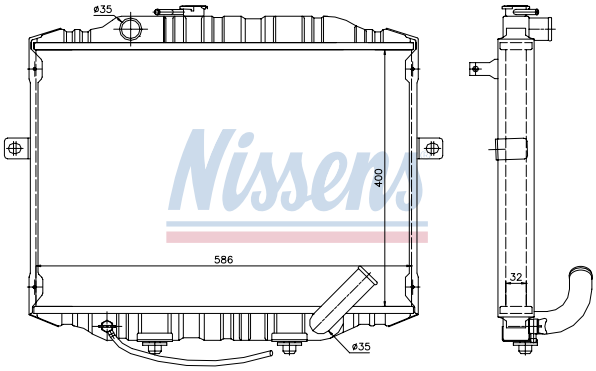

HYUNDAI — H-100 PORTER (97-)
HYUNDAI — H-100 MINI BUS (93-)

67501

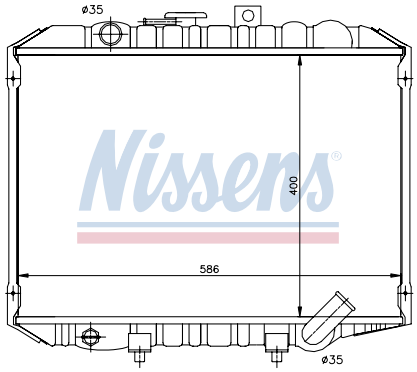

HYUNDAI	STAREX (93-)
MITSUBISHI	L 300 (86-)
MAZDA	B 1600 (84-)
MAZDA	B 2000 (84-)

68130

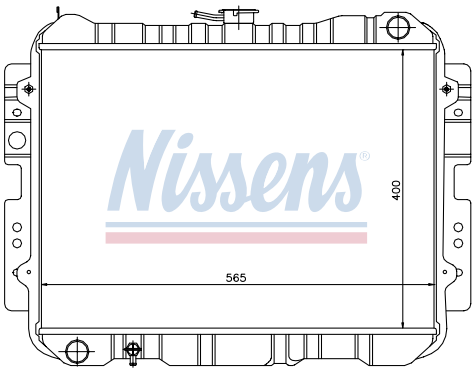

MAZDA	B 2200 (84-)
MITSUBISHI	MONTERO SPORT (98-)
MITSUBISHI	PAJERO SPORT (98-)

68155

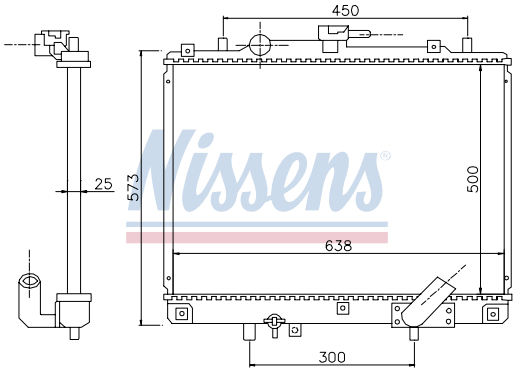

MITSUBISHI	MONTERO SPORT (98-)
MITSUBISHI	PAJERO SPORT (98-)

68156

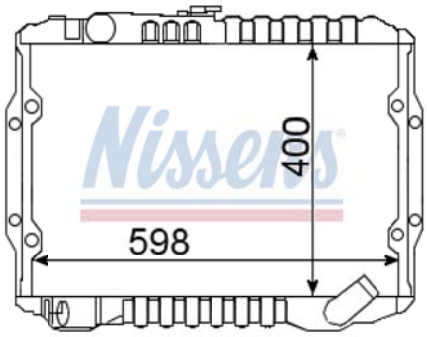

MITSUBISHI	L 200 (87-)

68157

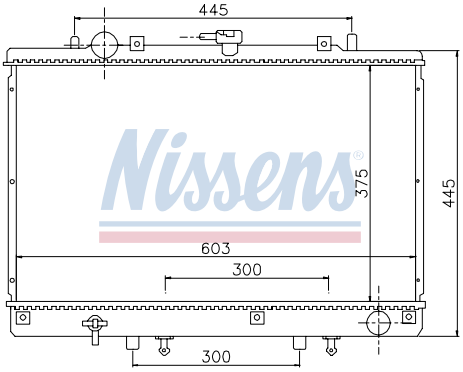

MITSUBISHI	PAJERO (90-)
MITSUBISHI	SHOGUN (90-)

68700A

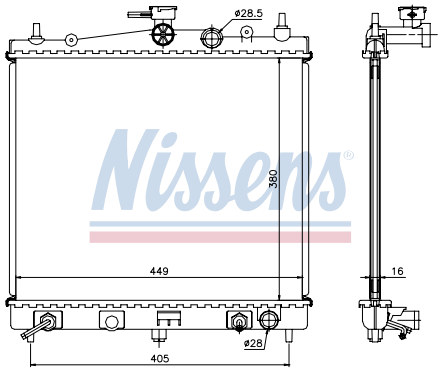

NISSAN	NOTE (06-)
NISSAN	X-TRAIL T30 (01-)
NISSAN	X-TRAIL T30 (01-)

68706A

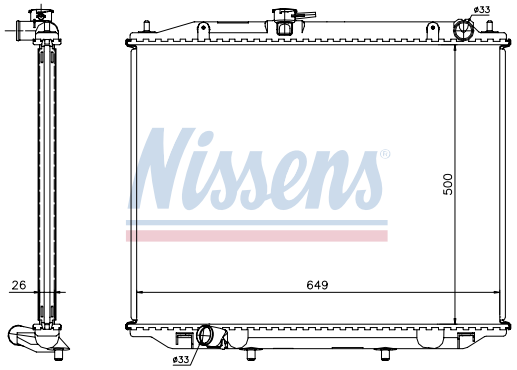

NISSAN TERRANO (02-)

68707A

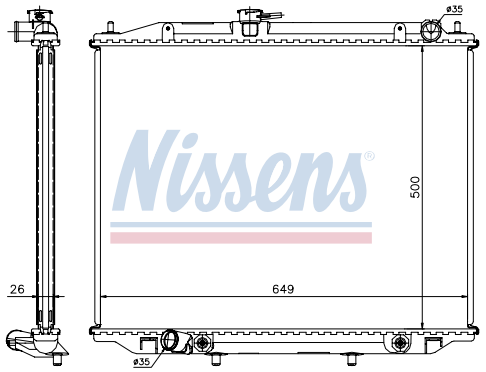

NISSAN TERRANO (02-)

68708A

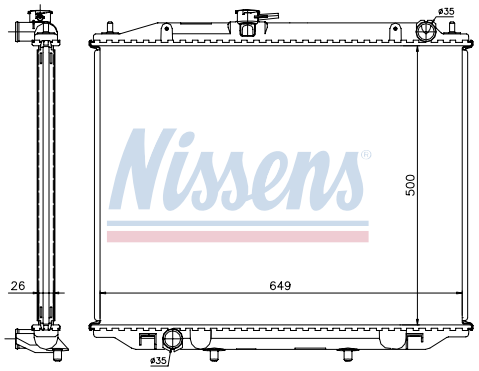

FORD MAVERICK (96-)
NISSAN TERRANO (96-)
NISSAN TERRANO (02-)

68709A

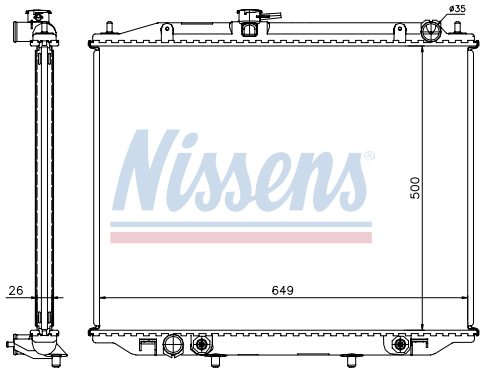

FORD MAVERICK (96-)
NISSAN TERRANO (96-)
NISSAN TERRANO (02-)

68715

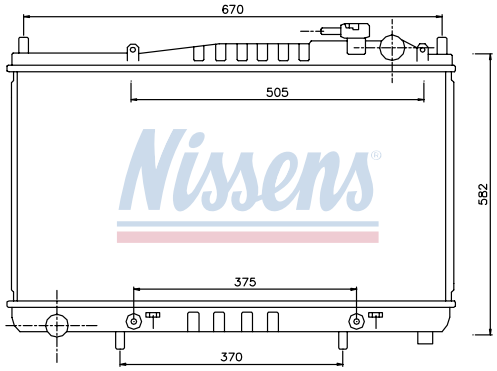

NISSAN PATHFINDER (97-)

69195A

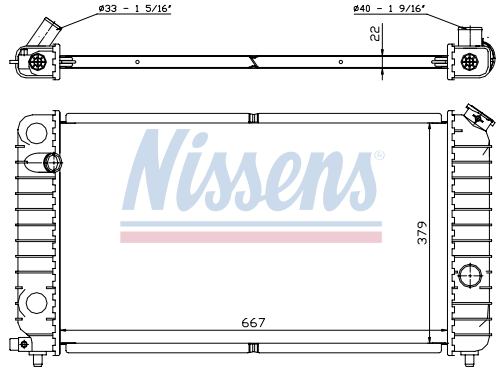

CHEVROLET PICKUP S10

69205

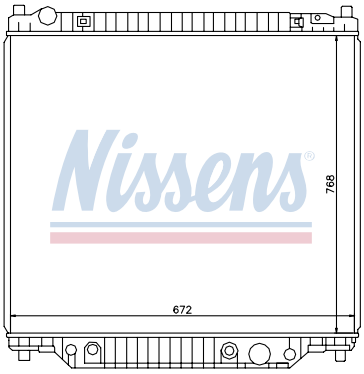

FORD USA	F250 SUPER DUTY (99-)
FORD USA	F350 SUPER DUTY (99-)
FORD USA	F450 SUPER DUTY (99-)
FORD USA	F550 SUPER DUTY (99-)
FORD USA	F250 SUPER DUTY (99-)
FORD USA	F350 SUPER DUTY (99-)

70228

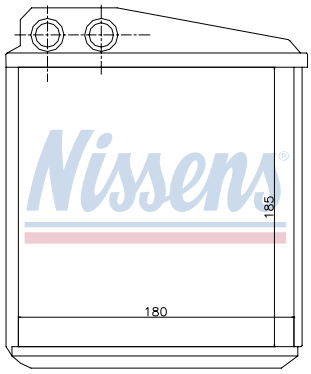

VOLKSWAGEN
CITROEN
FIAT
PEUGEOT
TALBOT

71147

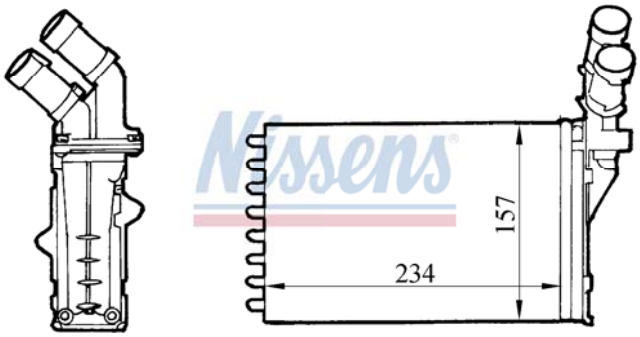

PEUGEOT	PARTNER (96-)
CITROEN	C 25 (81-)
FIAT	DUCATO (81-)
FIAT	TALENTO (89-)
PEUGEOT	J5 (81-)
TALBOT	EXPRESS (81-)
CITROEN	DISPATCH (95-)

71149

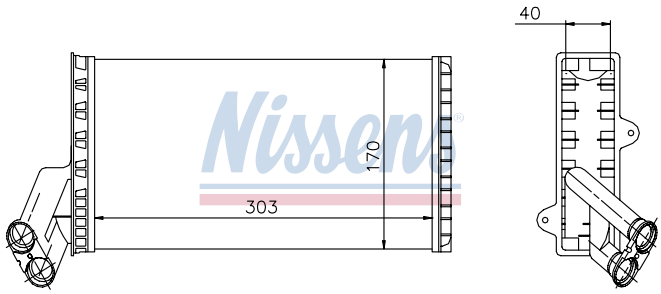

CITROEN
FIAT
PEUGEOT

71443

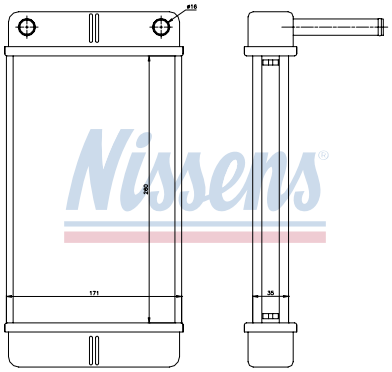

CITROEN	RELAY (94-)
FIAT	DUCATO (94-)
PEUGEOT	BOXER (94-)
FIAT	DOBLO (01-)

71740

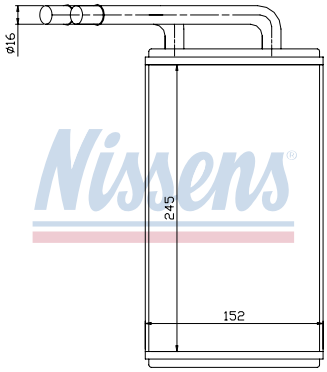

FORD TRANSIT (94-)

71741

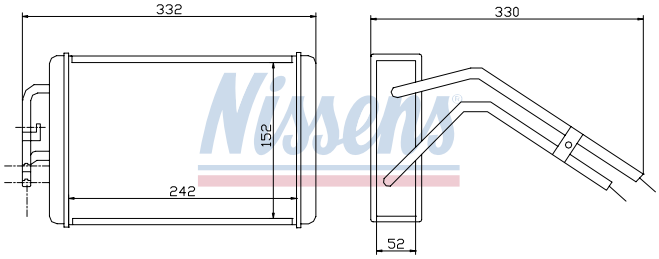

FORD TRANSIT (94-)

71747

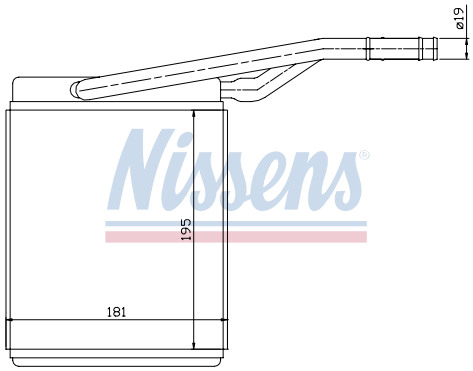

FORD TRANSIT CONNECT (02-)
FORD TRANSIT (86-)

71758

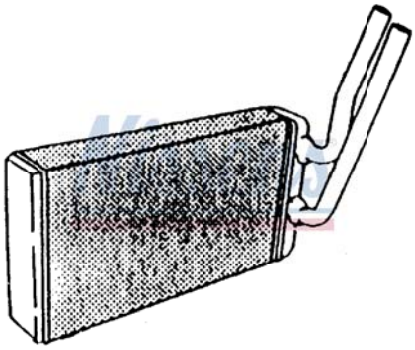

FORD TRANSIT (92-)

71759

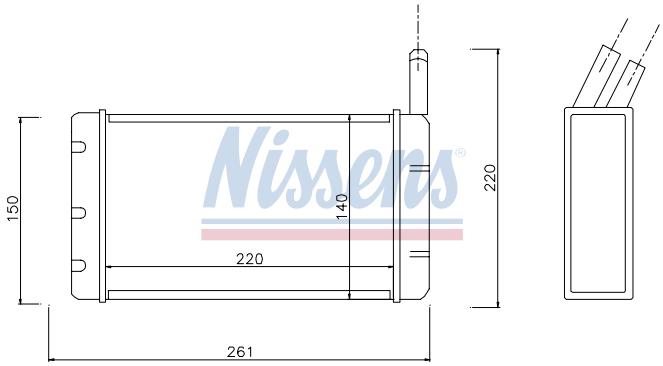

FORD TRANSIT (78-)

71761

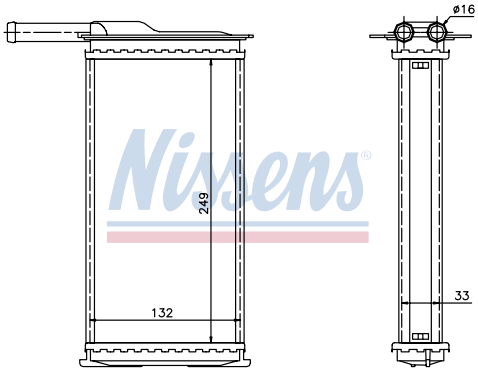

FORD
MAZDA

71769

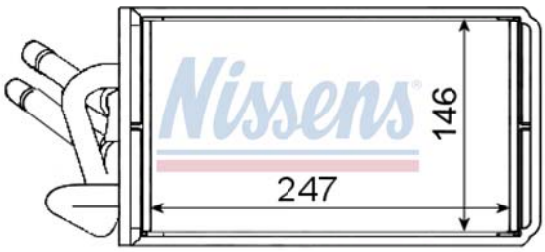

FORD TRANSIT (00-)

72004

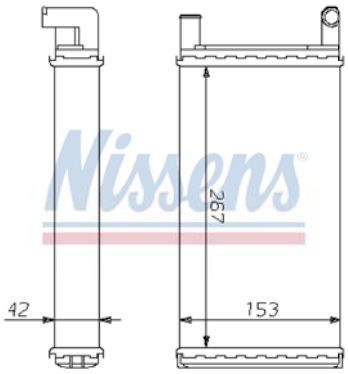

MERCEDES
FORD

72050

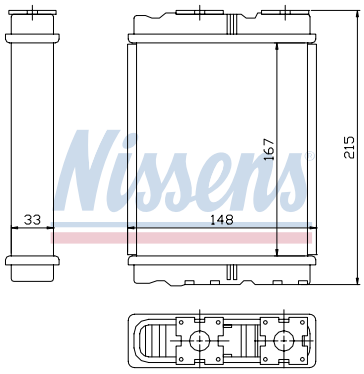

FORD
NISSAN
OPEL
CITROEN

72980

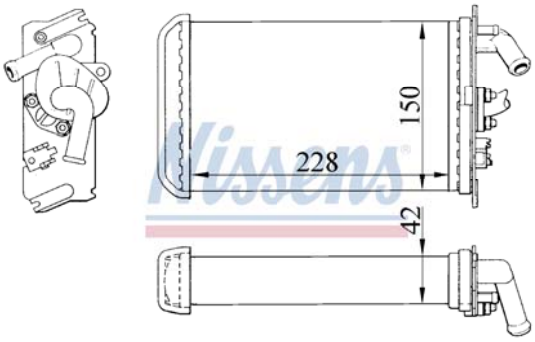

FIAT	DUCATO (81-)
FIAT	TALENTO (89-)
PEUGEOT	J5 (81-)
TALBOT	EXPRESS (81-)
NISSAN	KUBISTAR (03-)
RENAULT	KANGOO (98-)

73252

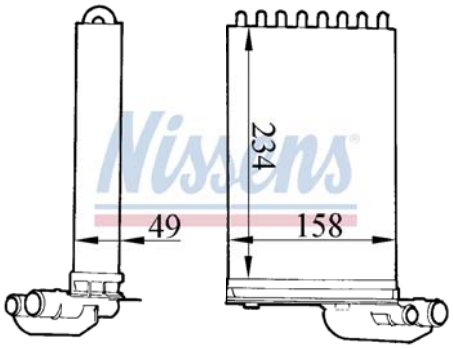

RENAULT	KANGOO (98-)
RENAULT	TRAFIC (80-)
RENAULT	TRAFIC (89-)
RENAULT	TRAFIC (97-)

73358

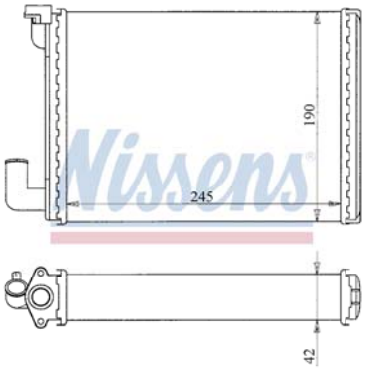

RENAULT MASTER (80-)

73359

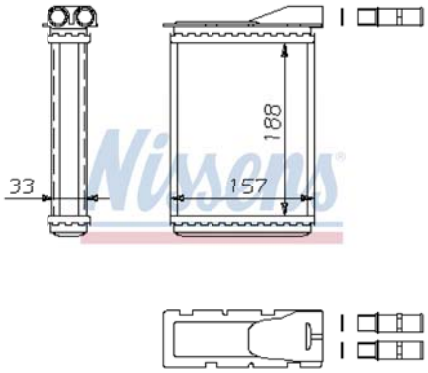

RENAULT

73361

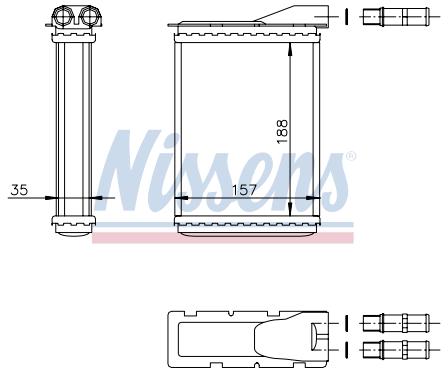

RENAULT
NISSAN
OPEL
PONTIAC
TOYOTA

73457

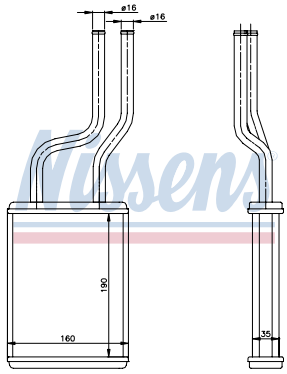

TOYOTA HI-ACE (95-)
TOYOTA HI-ACE (01-)

73940

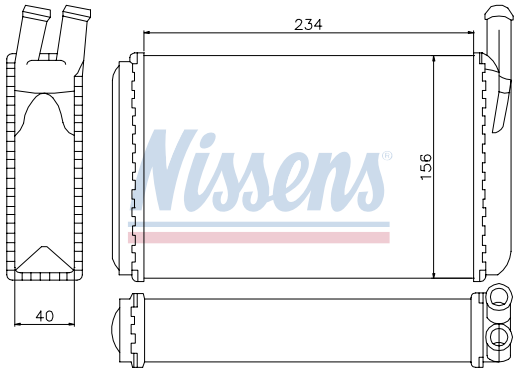

VOLKSWAGEN
SEAT
CITROEN
FIAT
PEUGEOT

73986

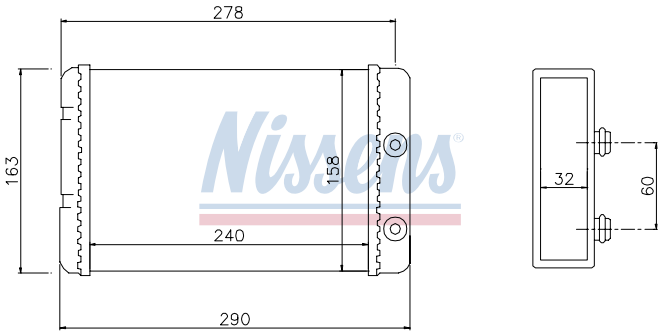

FIAT
PEUGEOT
CITROEN

73988

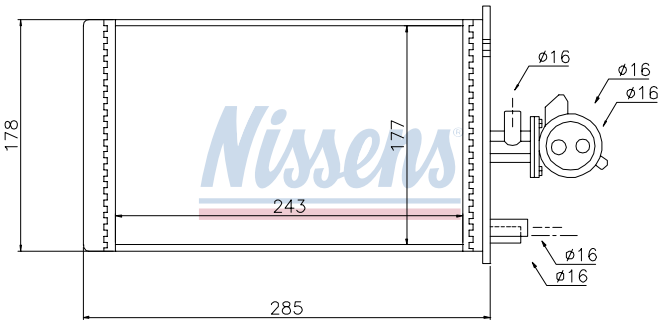

FIAT TALENTO (89-)
PEUGEOT J5 (81-)
TALBOT EXPRESS (81-)
KIA K-SERIE (01-)

77608

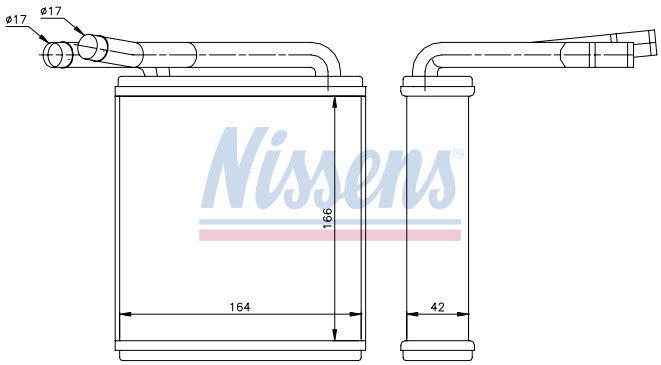

HYUNDAI H-100 MINI BUS (93-)
HYUNDAI H-100 PORTER (93-)
HYUNDAI H-200 (97-)

77610

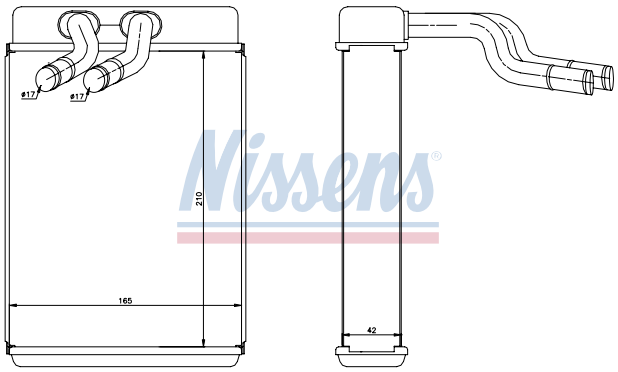

HYUNDAI	H1 (97-)
HYUNDAI	STAREX (93-)
HYUNDAI	H-100 MINI BUS (93-)

77617

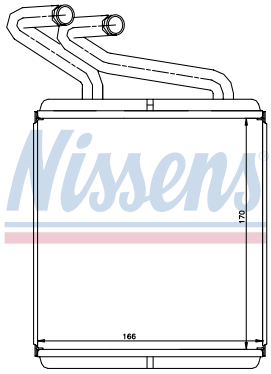

HYUNDAI	H-100 PORTER (97-)

77618

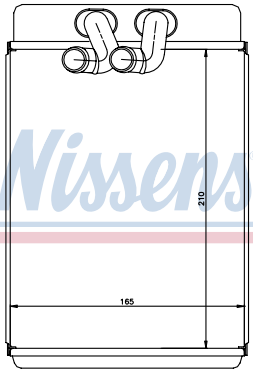

HYUNDAI	STAREX (93-)

85003

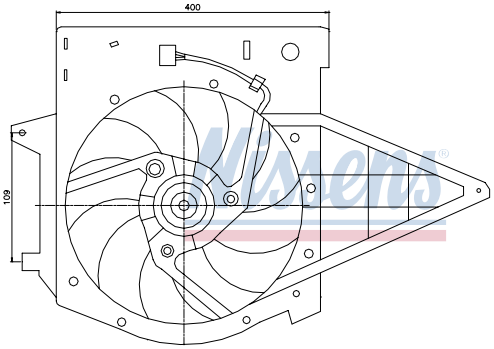

FAN FOR:
☐ A/C
☒ RADIATOR

CONNECTION:
☐ MULTI
☒ WIRE

VOLT:
☒ 12
☐ 24

WATT: 120 W

DIAMETER: 320 MM

OE BRAND: 1308.J2

FIAT	SCUDO (96-)
PEUGEOT	EXPERT (95-)
CITROEN	DISPATCH (95-)
CITROEN	JUMPY (95-)
FIAT	SCUDO (96-)
PEUGEOT	EXPERT (95-)
OPEL	COMBO (93-)

85006

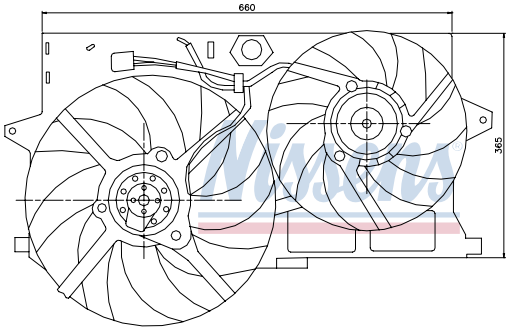

FAN FOR:
☐ A/C
☒ RADIATOR

CONNECTION:
☐ MULTI
☒ WIRE

VOLT:
☒ 12
☐ 24

WATT: 450/180 W

DIAMETER: 1x290/385 MM

OE BRAND: 1308.J1

CITROEN
FIAT
PEUGEOT

85020

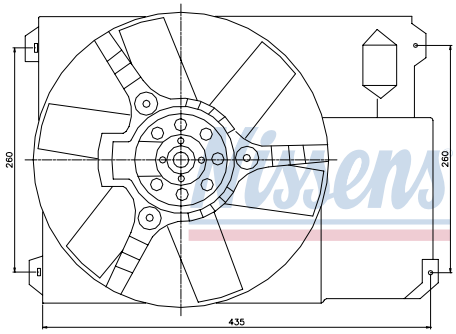

FAN FOR:
☐ A/C
☒ RADIATOR

CONNECTION:
☒ MULTI
☐ WIRE

VOLT:
☒ 12
☐ 24

WATT: W

DIAMETER: 303 MM

OE BRAND: 1305559080

FIAT
PEUGEOT
CITROEN

85074

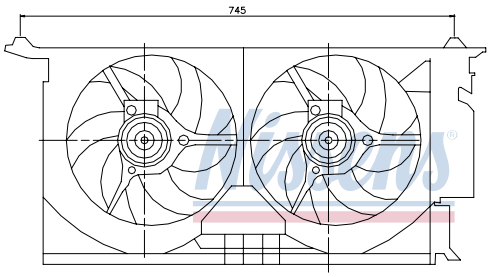

FAN FOR:
☐ A/C
☒ RADIATOR

CONNECTION:
☒ MULTI
☐ WIRE

VOLT:
☒ 12
☐ 24

WATT: W

DIAMETER: 335 MM

OE BRAND:

CITROEN	BERLINGO (96-)
PEUGEOT	PARTNER (96-)
MERCEDES	VANEO (02-)
CITROEN	BERLINGO (96-)
PEUGEOT	PARTNER (96-)

85084

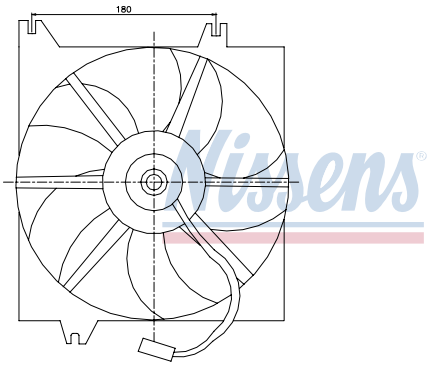

FAN FOR:
☐ A/C
☐ RADIATOR

CONNECTION:
☒ MULTI
☒ WIRE

VOLT:
☐ 12
☐ 24

WATT: W

DIAMETER: 325 MM

OE BRAND:

CITROEN	BERLINGO (96-)
PEUGEOT	PARTNER (96-)

85126

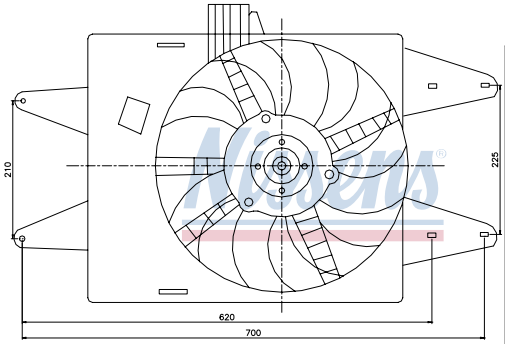

FAN FOR:
☐ A/C
☒ RADIATOR

CONNECTION:
☒ MULTI
☐ WIRE

VOLT:
☒ 12
☐ 24

WATT: W

DIAMETER: 385 MM

OE BRAND:

FIAT DOBLO (01-)

85127

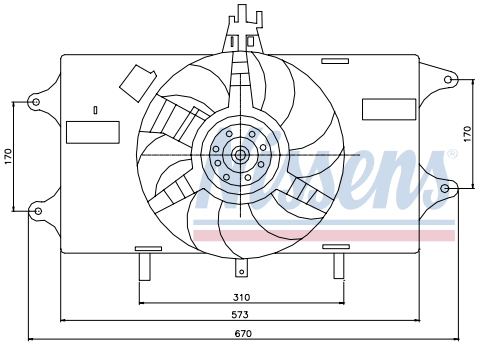

FAN FOR:
☐ A/C
☒ RADIATOR

CONNECTION:
☒ MULTI
☐ WIRE

VOLT:
☒ 12
☐ 24

WATT: W

DIAMETER: 310 MM

OE BRAND: 46737731

FIAT DOBLO (01-)

85128

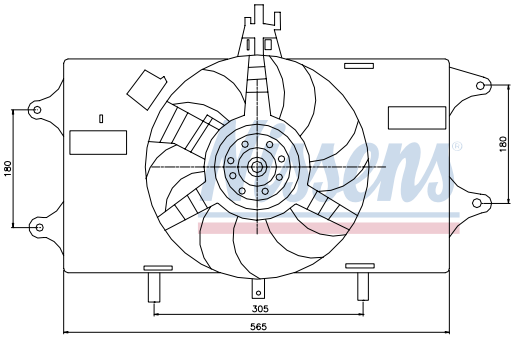

FAN FOR:
☐ A/C
☒ RADIATOR

CONNECTION:
☒ MULTI
☐ WIRE

VOLT:
☒ 12
☐ 24

WATT: W

DIAMETER: 310 MM

OE BRAND: 46737732

FIAT DOBLO (01-)

85129

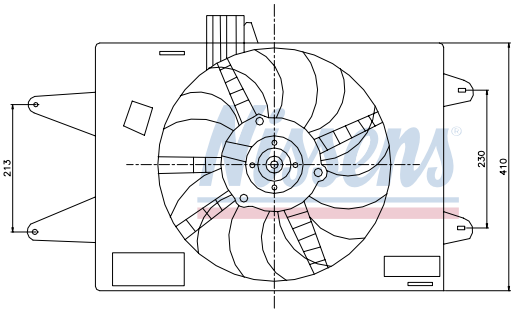

FAN FOR:
☐ A/C
☒ RADIATOR

CONNECTION:
☒ MULTI
☐ WIRE

VOLT:
☒ 12
☐ 24

WATT: W

DIAMETER: 385 MM

OE BRAND: 46767294

FIAT DOBLO (01-)

85130

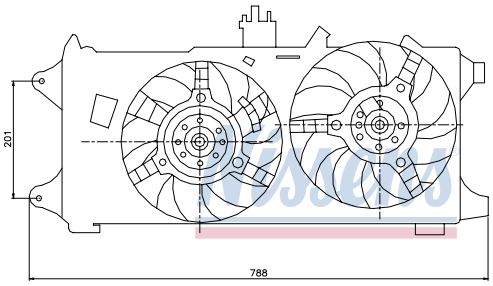

FAN FOR:
☐ A/C
☒ RADIATOR

CONNECTION:
☒ MULTI
☐ WIRE

VOLT:
☒ 12
☐ 24

WATT: W

DIAMETER: 280 MM

OE BRAND: 46821264

FIAT **DOBLO (01-)**

85131

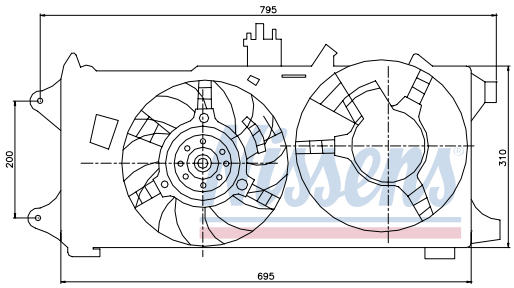

FAN FOR:
☐ A/C
☒ RADIATOR

CONNECTION:
☒ MULTI
☐ WIRE

VOLT:
☒ 12
☐ 24

WATT: W

DIAMETER: 277 MM

OE BRAND: 51718487

FIAT **DOBLO (01-)**

85133

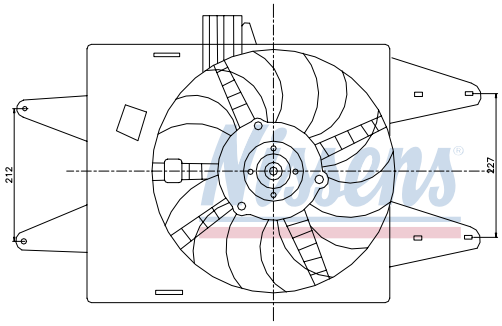

FAN FOR:
☐ A/C
☒ RADIATOR

CONNECTION:
☒ MULTI
☐ WIRE

VOLT:
☒ 12
☐ 24

WATT: W

DIAMETER: 383 MM

OE BRAND: 46737733

FIAT **DOBLO (01-)**

85190

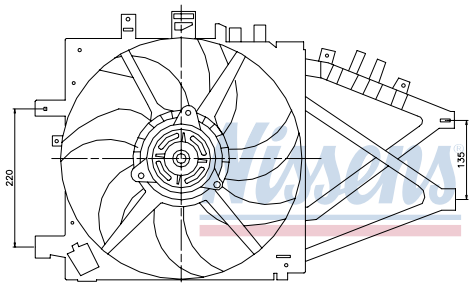

FAN FOR:
☐ A/C
☒ RADIATOR

CONNECTION:
☐ MULTI
☒ WIRE

VOLT:
☒ 12
☐ 24

WATT: W

DIAMETER: 380 MM

OE BRAND:

OPEL **COMBO (00-)**
OPEL **COMBO (93-)**
OPEL **COMBO (93-)**

85196

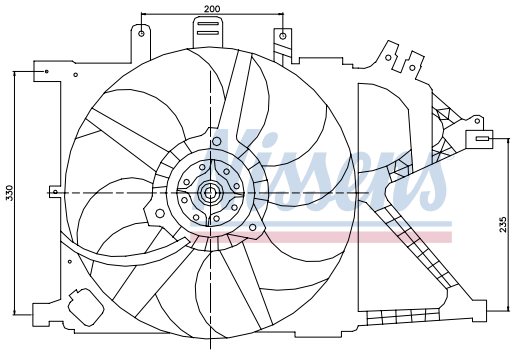

FAN FOR:
☐ A/C
☐ RADIATOR

CONNECTION:
☒ MULTI
☐ WIRE

VOLT:
☒ 12
☐ 24

WATT: W

DIAMETER: 395 MM

OE BRAND:

OPEL **COMBO (00-)**
OPEL **COMBO (00-)**

85243

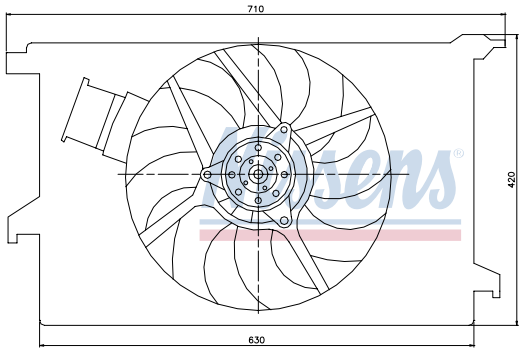

FAN FOR:
☐ A/C
☒ RADIATOR

CONNECTION:
☒ MULTI
☐ WIRE

VOLT:
☒ 12
☐ 24

WATT: W

DIAMETER: 365 MM

OE BRAND: 6341153

PONTIAC **G6 (05-)**
NISSAN **INTERSTAR (02-)**
OPEL **ARENA (98-)**
OPEL **MOVANO (98-)**
RENAULT **MASTER (98-)**
NISSAN **INTERSTAR (02-)**

85245

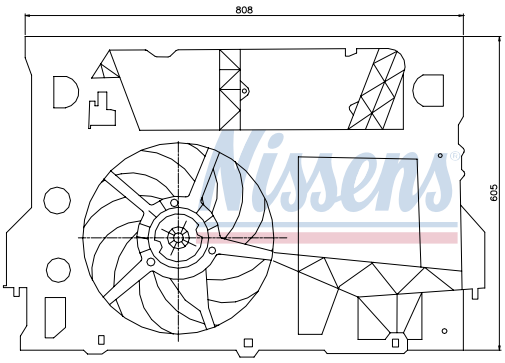

FAN FOR:
☐ A/C
☒ RADIATOR

CONNECTION:
☒ MULTI
☐ WIRE

VOLT:
☒ 12
☐ 24

WATT: 450 W

DIAMETER: 385 MM

OE BRAND: 4402604

OPEL	ARENA (98-)
OPEL	MOVANO (98-)
RENAULT	MASTER (98-)
VOLKSWAGEN	TRANSPORTER T4 (90-)

85253

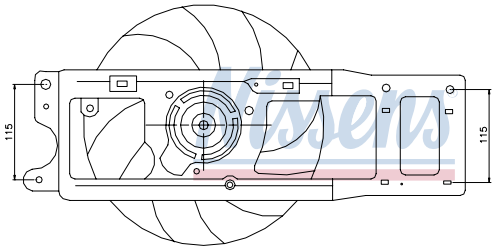

FAN FOR:
☐ A/C
☒ RADIATOR

CONNECTION:
☒ MULTI
☐ WIRE

VOLT:
☒ 12
☐ 24

WATT: W

DIAMETER: 300 MM

OE BRAND:

NISSAN	KUBISTAR (03-)
RENAULT	KANGOO (98-)
FORD	TRANSIT CONNECT (02-)
FORD	TRANSIT CONNECT (02-)
FORD	TRANSIT CONNECT (02-)

85264

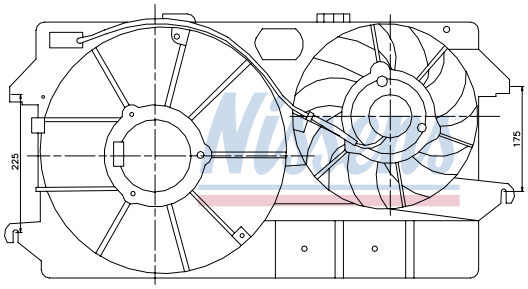

FAN FOR:
☐ A/C
☒ RADIATOR

CONNECTION:
☐ MULTI
☒ WIRE

VOLT:
☒ 12
☐ 24

WATT: W

DIAMETER: 280 MM

OE BRAND:

FORD	TRANSIT CONNECT (02-)

85276

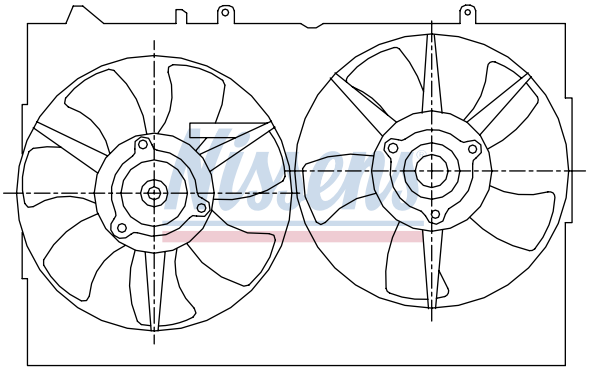

MITSUBISHI	OUTLANDER (03-)

85277

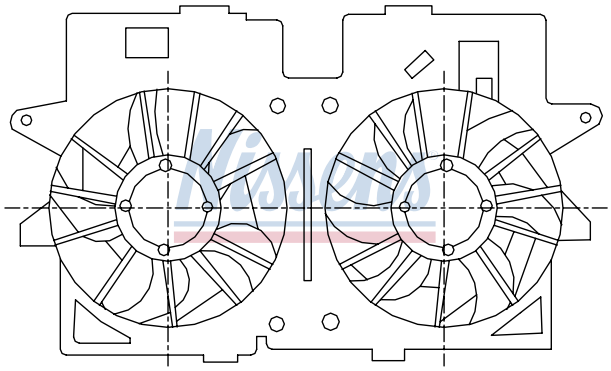

FORD	MAVERICK (02-)
MAZDA	TRIBUTE (02-)
FORD	MAVERICK (02-)
MAZDA	TRIBUTE (02-)

85279

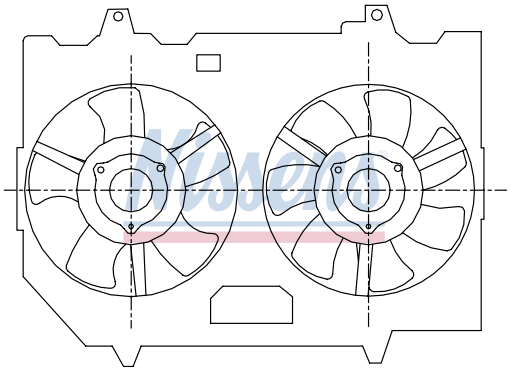

NISSAN	X-TRAIL T30 (01-)

85383

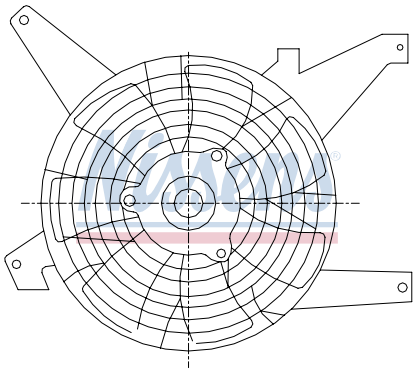

MITSUBISHI	MONTERO (00-)
MITSUBISHI	PAJERO (00-)
MITSUBISHI	SHOGUN (00-)

85384

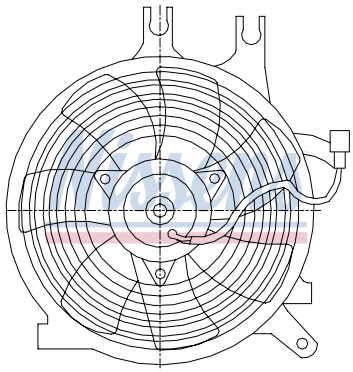

MITSUBISHI	MONTERO SPORT (98-)
MITSUBISHI	PAJERO SPORT (98-)

85403

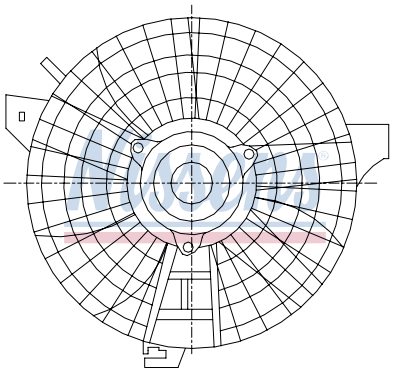

MERCEDES	VITO W 638 (96-)
CHEVROLET	LUMINA APV (97-)

85408

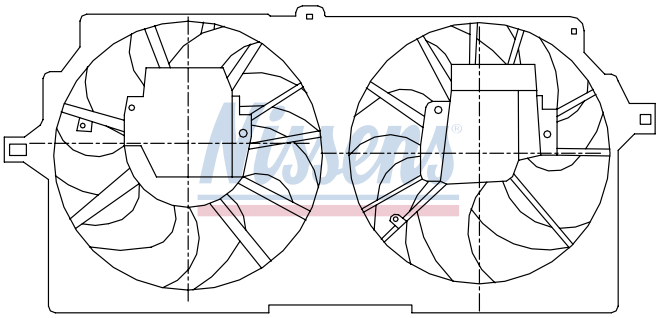

CHEVROLET
OLDSMOBILE
PONTIAC

85409

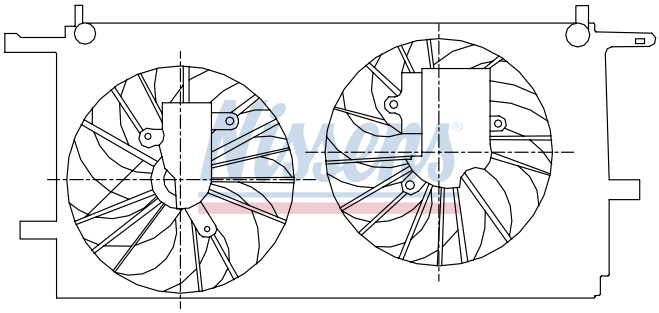

CHEVROLET	MONTANA (97-)
CHEVROLET	TRANS SPORT (97-)
CHEVROLET	VENTURE (97-)
OLDSMOBILE	SILHOUETTE (97-)
PONTIAC	TRANS SPORT (97-)
PONTIAC	VENTURE (97-)
OPEL	FRONTERA A (92-)

85425

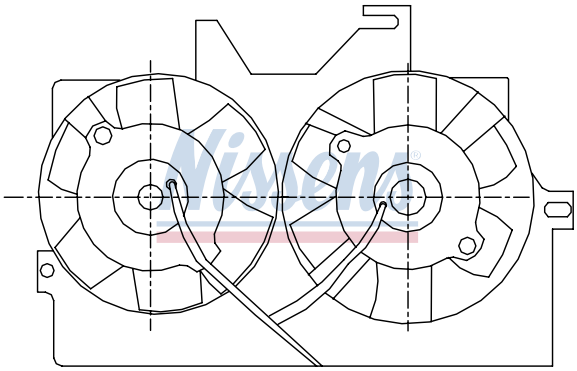

FORD	TRANSIT (94-)

85433

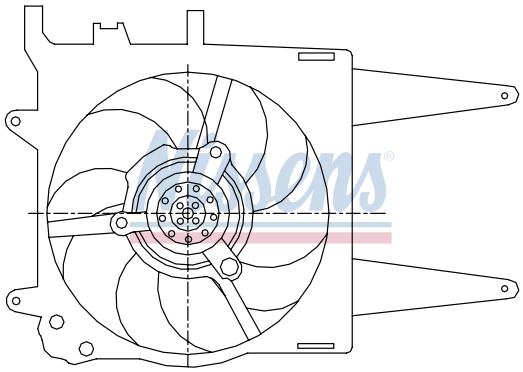

FIAT	FIORINO (04-)
OPEL	FRONTERA B (98-)
SEAT	INCA (95-)
VOLKSWAGEN	CADDY (95-)

85469

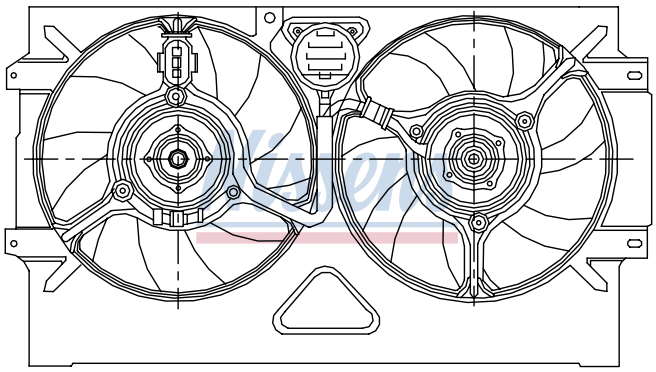

SEAT	INCA (95-)
VOLKSWAGEN	CADDY (95-)
SEAT	INCA (95-)
VOLKSWAGEN	CADDY (95-)
NISSAN	VANETTE CARGO (95-)

85480

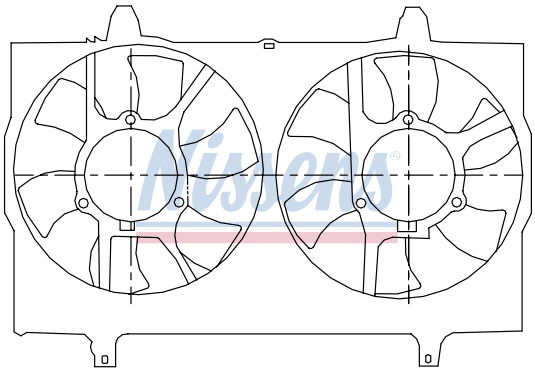

NISSAN	VANETTE CARGO (95-)
FORD	TRANSIT (94-)
MERCEDES	209 D (76-)

90519

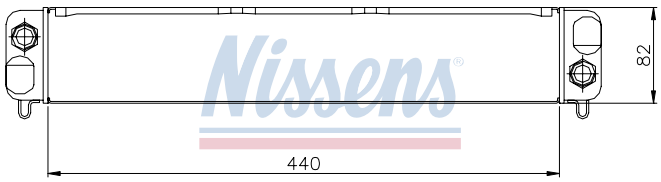

MERCEDES	309 D (68-)
MERCEDES	407 D (81-)
MERCEDES	409 D (77-)
MERCEDES	209 D (76-)
MERCEDES	309 D (68-)

90521

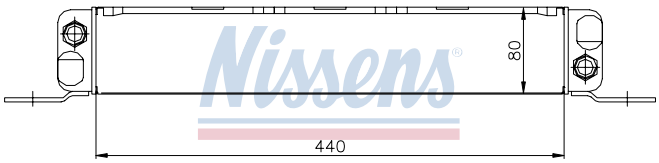

MERCEDES	409 D (77-)
RENAULT	TRAFIC (89-)
RENAULT	TRAFIC (97-)

90583

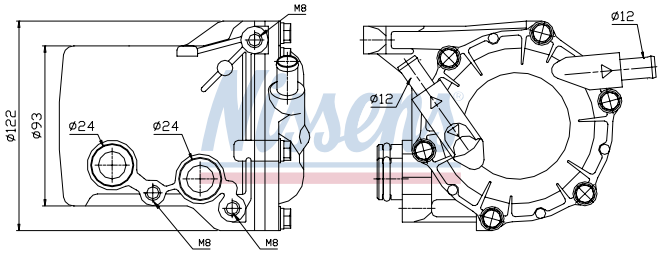

MERCEDES	VITO W 638 (96-)
CITROEN	JUMPER (94-)
CITROEN	RELAY (94-)

90606

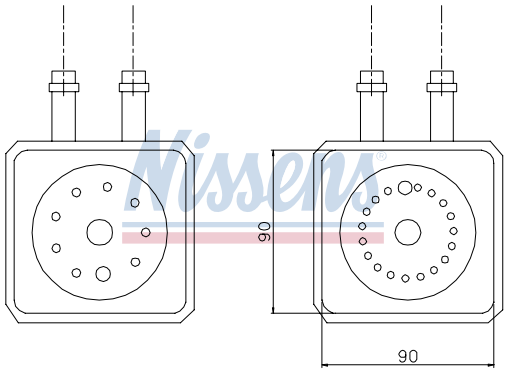

VOLKSWAGEN
SEAT
HYUNDAI
MERCEDES
MAZDA
FORD
NISSAN

92112

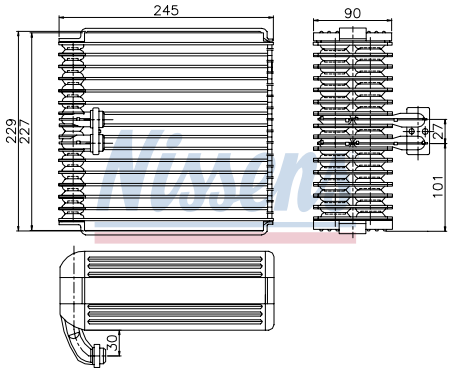

TOYOTA — 4 RUNNER (85-)
TOYOTA — HI-LUX (88-)

92124

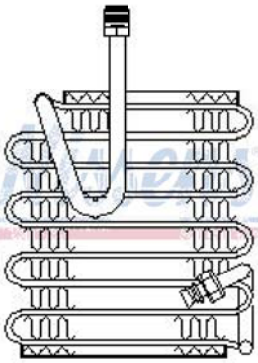

TOYOTA — 4 RUNNER (85-)
TOYOTA — HI-LUX (88-)

92133

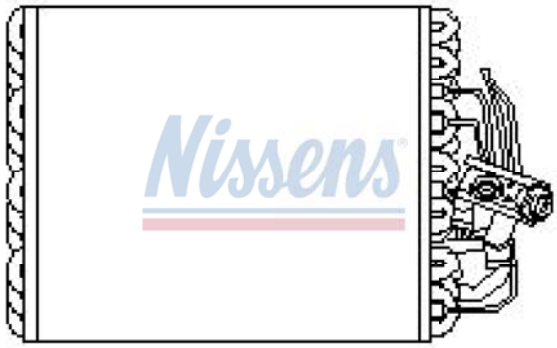

VOLKSWAGEN — TRANSPORTER T4 (90-)

92135

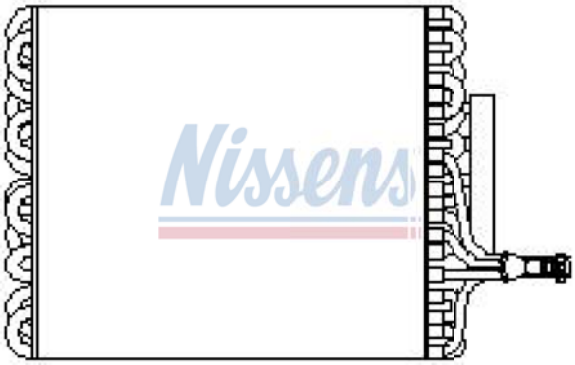

SEAT
VOLKSWAGEN
OPEL
MERCEDES
CITROEN

92170

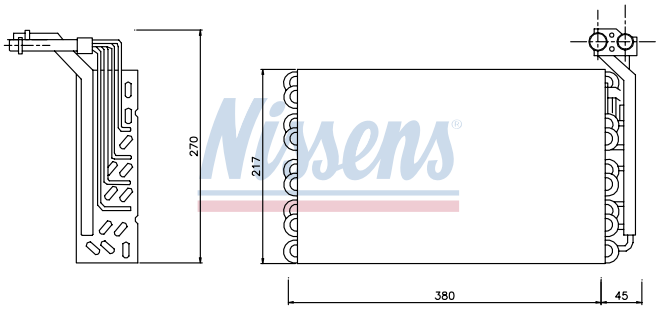

CITROEN
FIAT
PEUGEOT
OPEL
FORD

92206

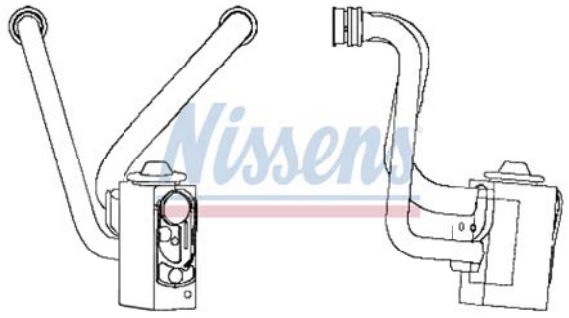

FIAT	DOBLO (01-)
NISSAN	KUBISTAR (03-)
RENAULT	KANGOO (98-)

94024

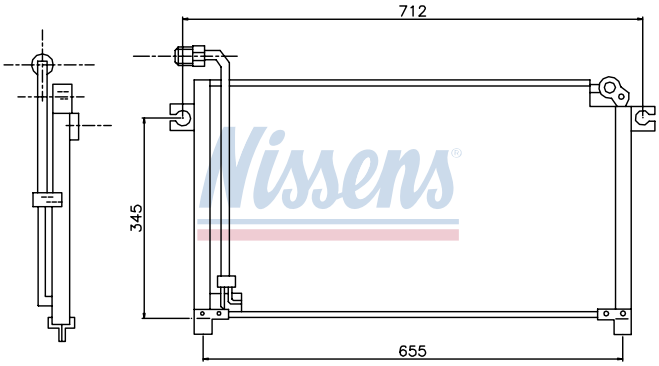

NISSAN	KING CAB D21 (85-)
NISSAN	PICK UP D21 (85-)
NISSAN	TERRANO (86-)
NISSAN	TERRANO (87-)

94029

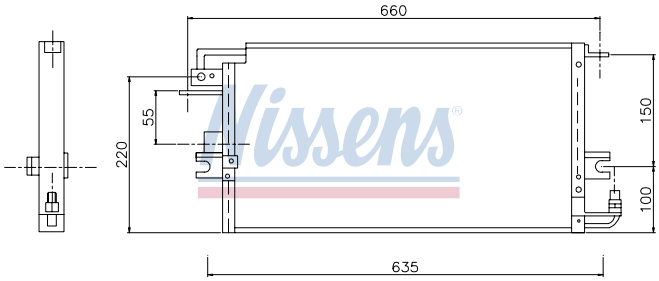

TOYOTA	HI-LUX (88-)

94038

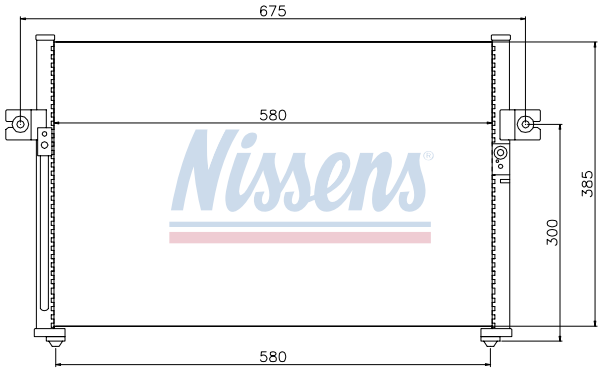

HYUNDAI	H-100 MINI BUS (93-)
HYUNDAI	H-100 PORTER (97-)
HYUNDAI	H1 (97-)
HYUNDAI	STAREX (93-)
HYUNDAI	GALLOPER (91-)

94050

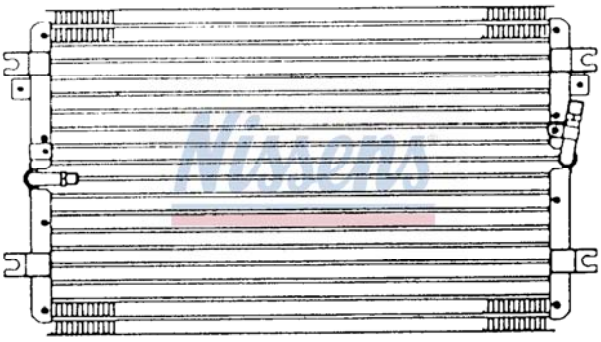

TOYOTA	LANDCRUISER

94052

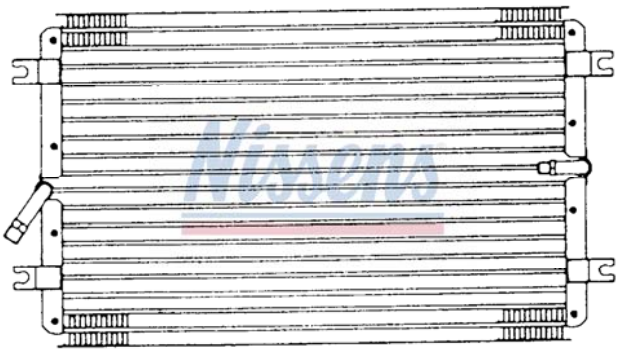

TOYOTA	LAND CRUISER 60 (84-)

94053

TOYOTA — LAND CRUISER 100 (98-)

94117

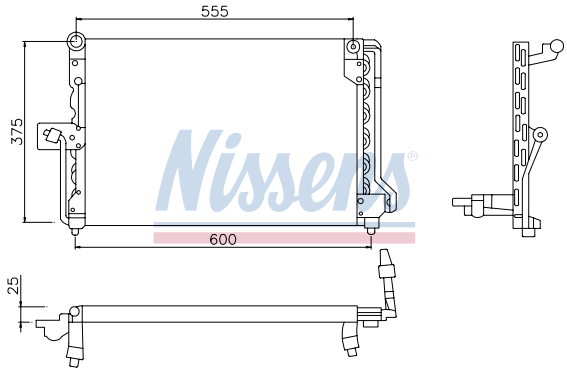

LDV (96-) — CONVOY (98-)
RENAULT — EXPRESS (91-)
RENAULT — EXTRA (91-)

94132

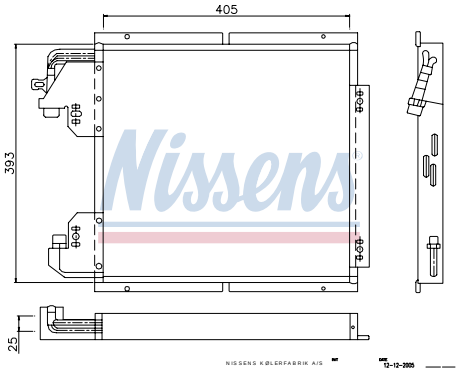

RENAULT — RAPID (91-)
TOYOTA — LAND CRUISER 80 (94-)
TOYOTA — LAND CRUISER 80 (90-)
CITROEN — BERLINGO (96-)

94200

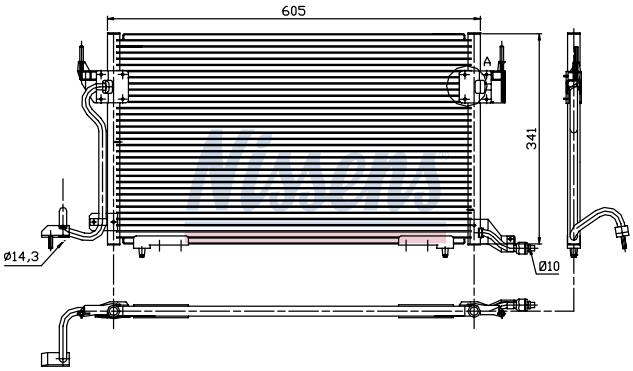

PEUGEOT — PARTNER (96-)
SEAT — INCA (95-)
VOLKSWAGEN — CADDY (95-)
CITROEN — DISPATCH (95-)

94210

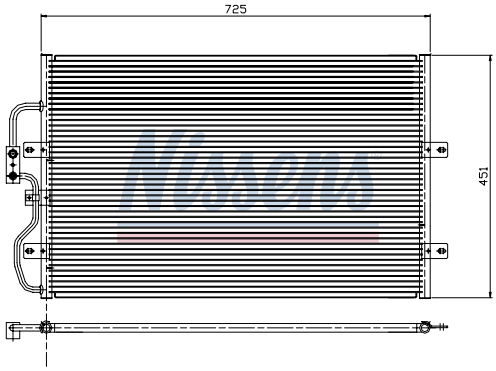

CITROEN
FIAT
PEUGEOT
MERCEDES
OPEL
VAUXHALL

94243

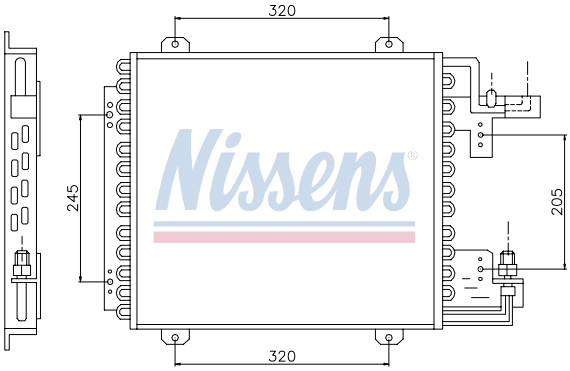

RENAULT — EXPRESS (91-)
RENAULT — EXTRA (91-)
RENAULT — RAPID (91-)
VOLKSWAGEN — LT (96-)

94258

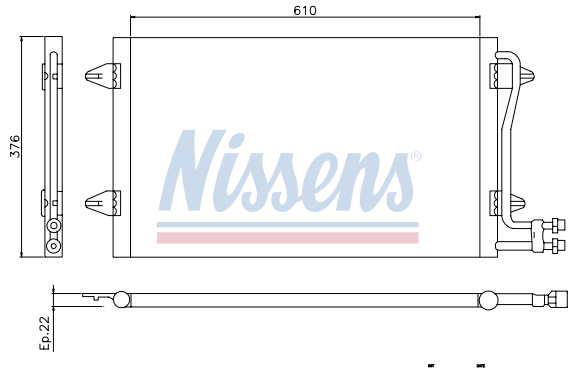

VOLKSWAGEN	LT (03-)
CITROEN	BERLINGO (96-)

94276

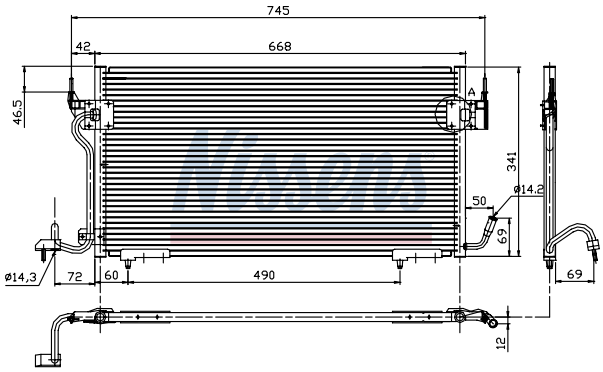

PEUGEOT	PARTNER (96-)
VOLKSWAGEN	TRANSPORTER T4 (90-)
CITROEN	BERLINGO (96-)
PEUGEOT	PARTNER (96-)

94324

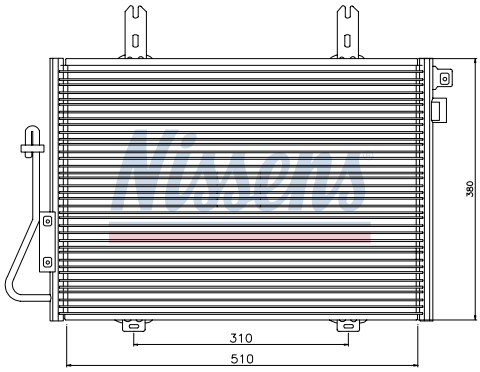

NISSAN	KUBISTAR (03-)
RENAULT	KANGOO (98-)

94325

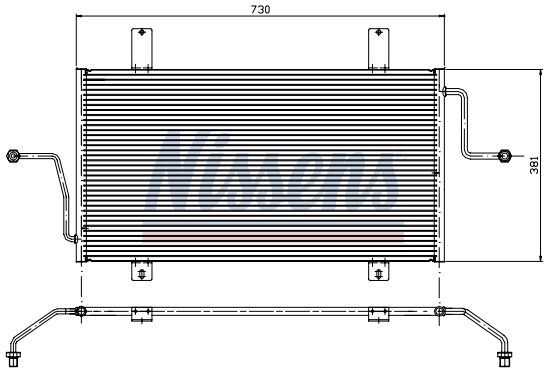

OPEL	ARENA (98-)
OPEL	MOVANO (98-)
RENAULT	MASTER (98-)

94326

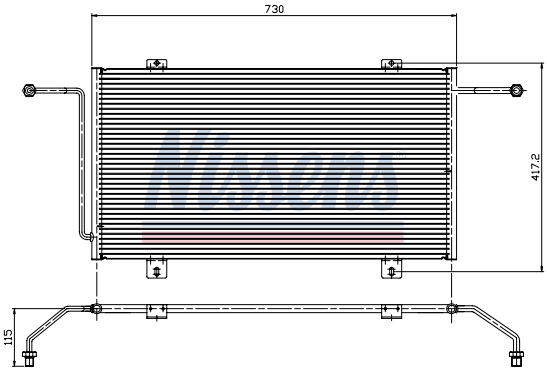

OPEL	ARENA (98-)
OPEL	MOVANO (98-)
RENAULT	MASTER (98-)

94352

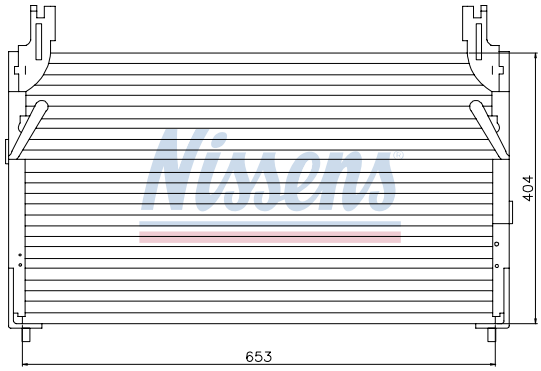

MAZDA	MPV LV52

94383

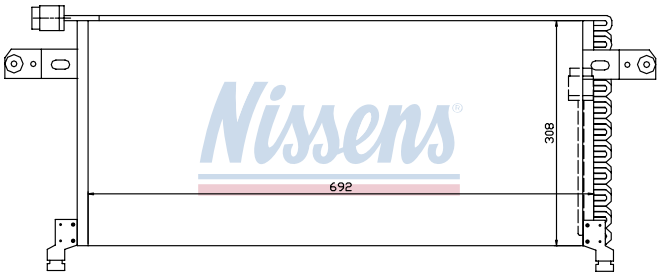

NISSAN	PATROL (79-)
NISSAN	PATROL Y60 (88-)

94393

CHEVROLET
OLDSMOBILE
PONTIAC

94394

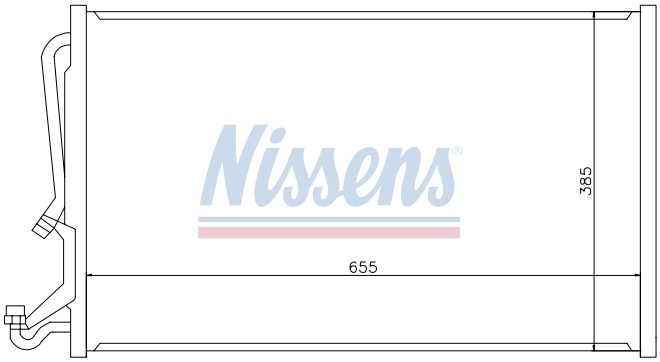

CHEVROLET
OLDSMOBILE
PONTIAC

94396

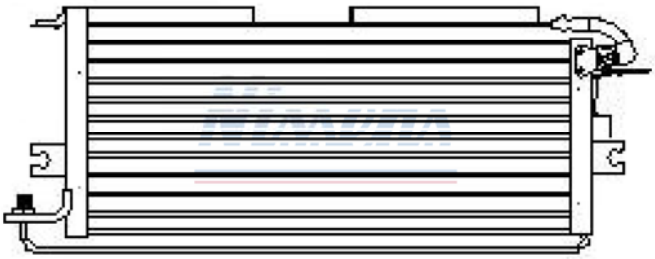

TOYOTA	HI-LUX (88-)

94439

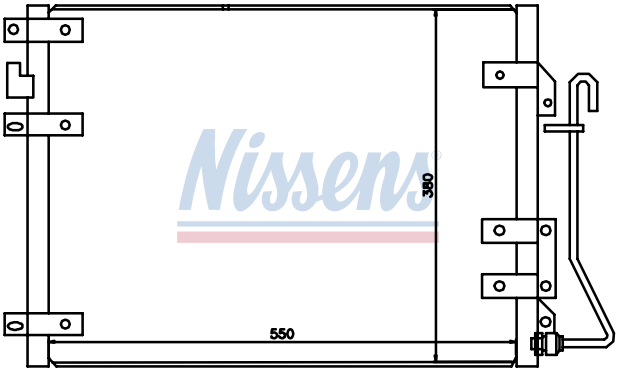

NISSAN	KUBISTAR (03-)
RENAULT	KANGOO (98-)
FORD	WINDSTAR (94-)
FORD USA	AEROSTAR (85-)
FORD	EXPLORER (91-)
FORD USA	BRONCO (85-)

94472

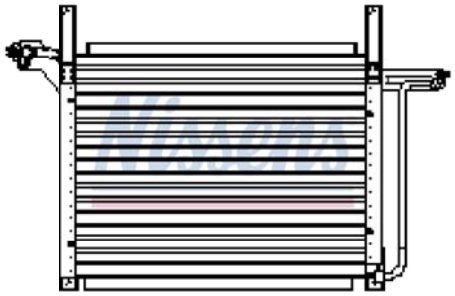

FORD USA	RANGER (85-)
FORD USA	RANGER PICKUP (93-)
FORD	EXPLORER (91-)
FORD	PICKUP F-SER (85-)

94475

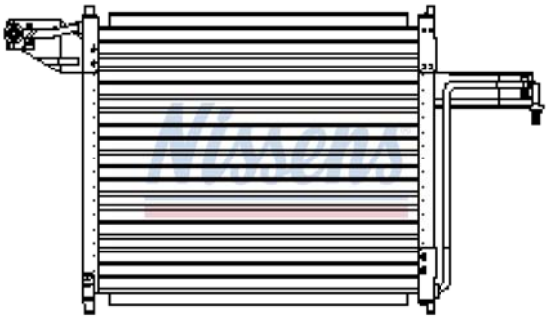

FORD USA — RANGER PICKUP (93-)

94476

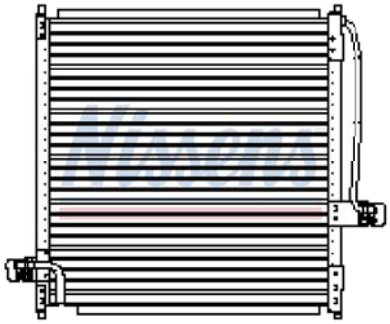

FORD USA — RANGER PICKUP (98-)

94483

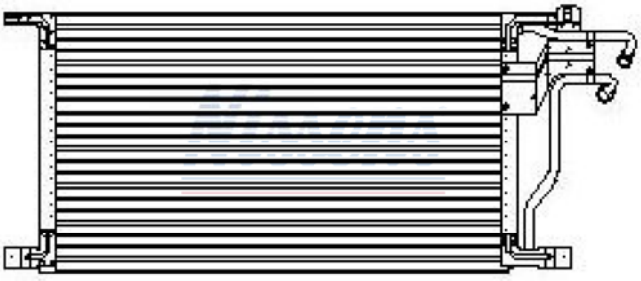

FORD — TRANSIT (94-)

94493

MITSUBISHI — L 300 (86-)
NISSAN — PATHFINDER (97-)
FORD — MAVERICK (96-)

94501

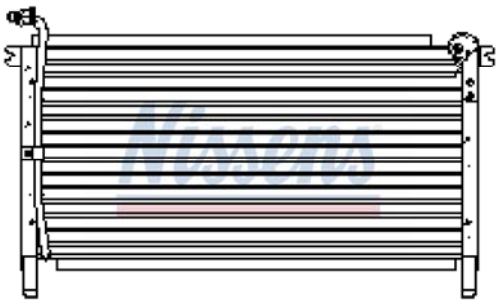

NISSAN — TERRANO (93-)
NISSAN — TERRANO (96-)
TOYOTA — 4 RUNNER (95-)

94512

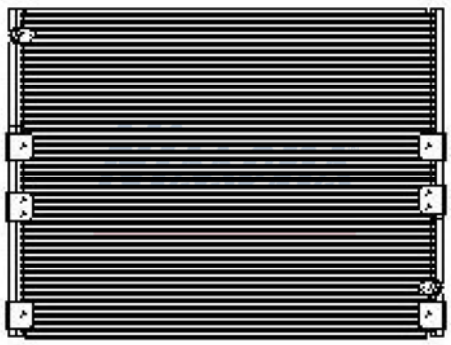

TOYOTA — LAND CRUISER 90 (96-)
TOYOTA — 4 RUNNER (85-)

94513

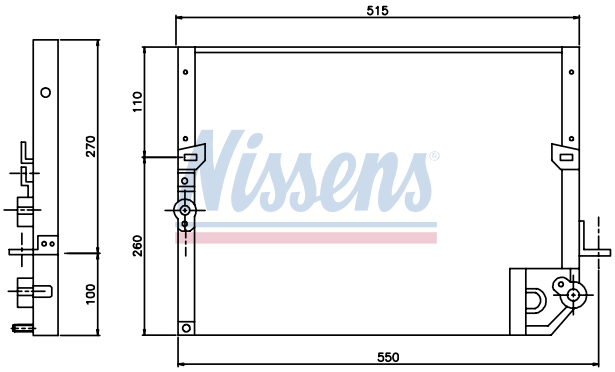

TOYOTA HI-LUX (88-)
TOYOTA HI-LUX (97-)

94518

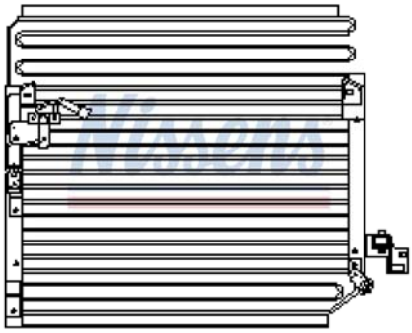

TOYOTA HI-LUX (97-)

94524

VOLKSWAGEN TRANSPORTER T4 (90-)

94542

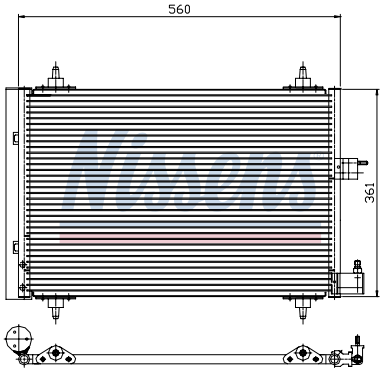

CITROEN BERLINGO (02-)
PEUGEOT PARTNER (02-)
OPEL COMBO (00-)
OPEL COMBO (00-)

94548

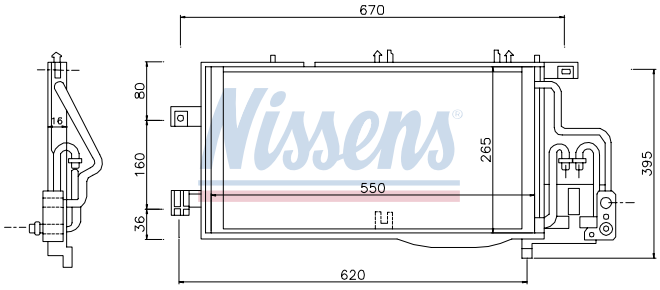

OPEL COMBO (00-)
FORD TRANSIT (00-)

94588

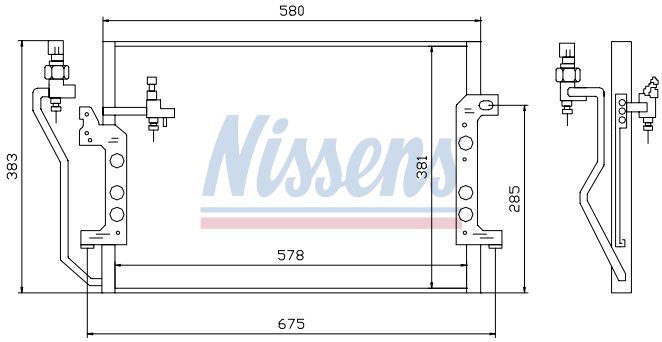

MERCEDES VANEO (02-)
VOLKSWAGEN TRANSPORTER T5 (03-)

94611

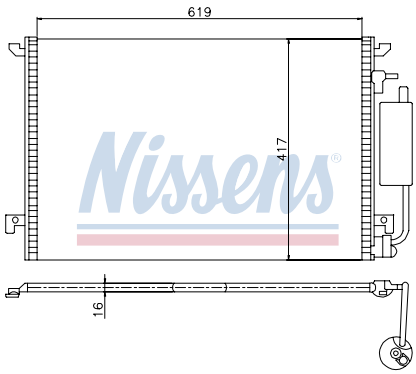

PONTIAC	G6 (05-)
MERCEDES	VANEO (02-)
FIAT	DOBLO (01-)
FIAT	DOBLO (01-)
FIAT	DOBLO (01-)
NISSAN	KUBISTAR (03-)
RENAULT	KANGOO (98-)

94659

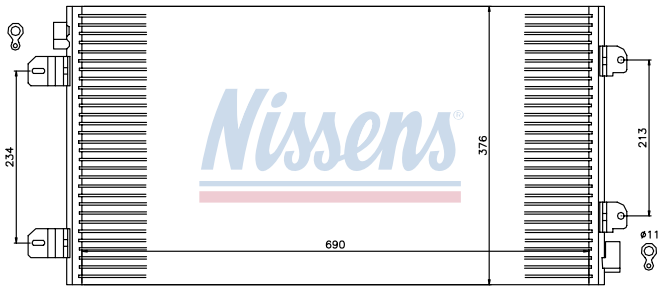

NISSAN	INTERSTAR (02-)
OPEL	ARENA (98-)
OPEL	MOVANO (98-)
RENAULT	MASTER (98-)

94660

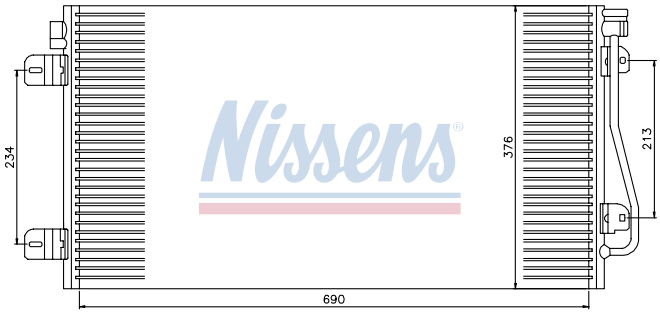

NISSAN	INTERSTAR (02-)
OPEL	ARENA (98-)
OPEL	MOVANO (98-)
RENAULT	MASTER (98-)

94664

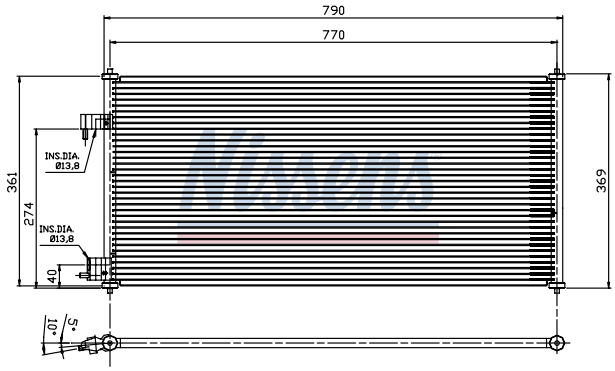

FORD	TRANSIT CONNECT (02-)

94667

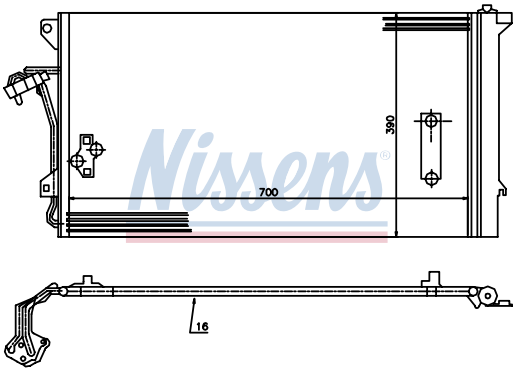

VOLKSWAGEN	TOUAREG (02-)
NISSAN	PRIMASTAR (02-)

94671

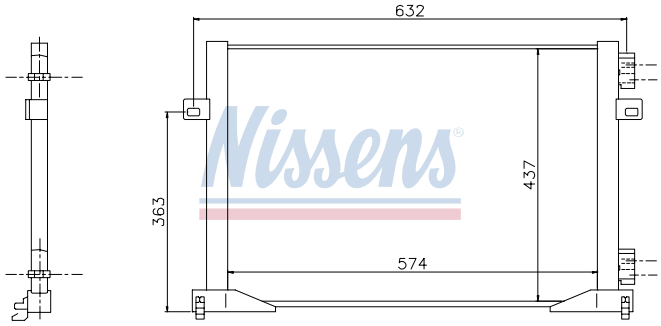

OPEL	VIVARO (01-)
RENAULT	TRAFIC (01-)
NISSAN	PRIMASTAR (02-)

94672

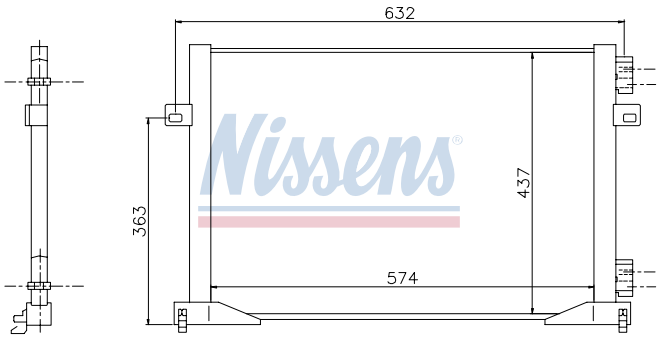

OPEL
RENAULT
MERCEDES

VIVARO (01-)
TRAFIC (01-)
VIANO W 639 (03-)

94674

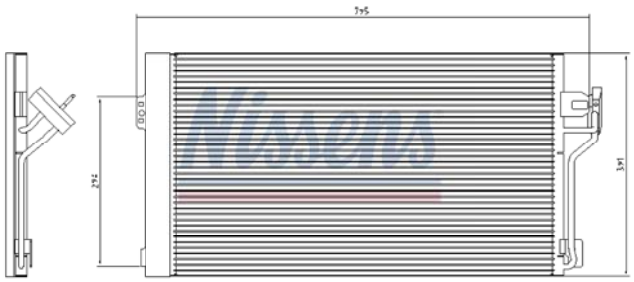

MERCEDES
PONTIAC

VITO W 639 (03-)
G6 (05-)

94676

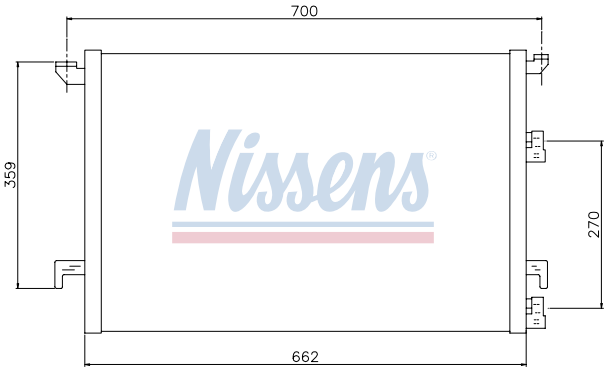

PONTIAC
NISSAN
OPEL
RENAULT

G6 (05-)
PRIMASTAR (02-)
VIVARO (01-)
TRAFIC (01-)

94684

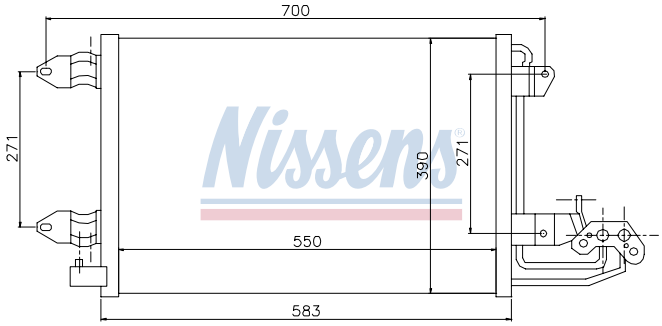

VOLKSWAGEN
OPEL
CITROEN
FIAT
PEUGEOT
MITSUBISHI

94703

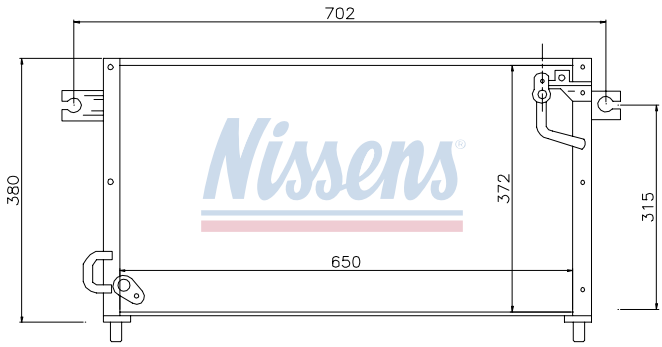

MITSUBISHI
OPEL

SHOGUN (90-)
COMBO (00-)

94722

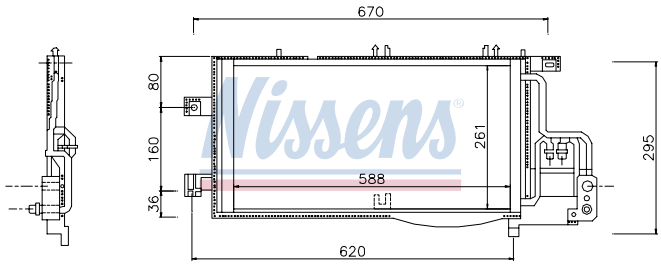

OPEL
FIAT
FORD

COMBO (00-)
DOBLO (01-)
MAVERICK (02-)

94731

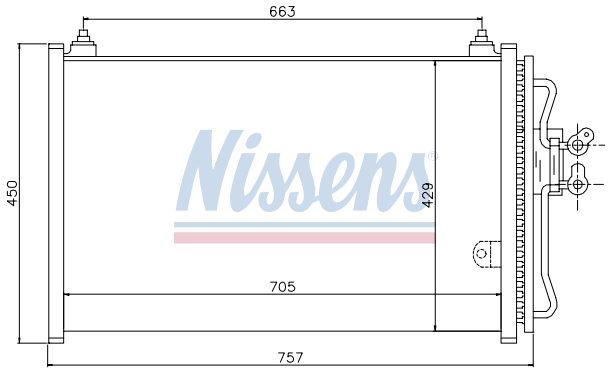

MAZDA	TRIBUTE (02-)
NISSAN	KUBISTAR (03-)
RENAULT	KANGOO (98-)
MITSUBISHI	PAJERO (90-)

94749

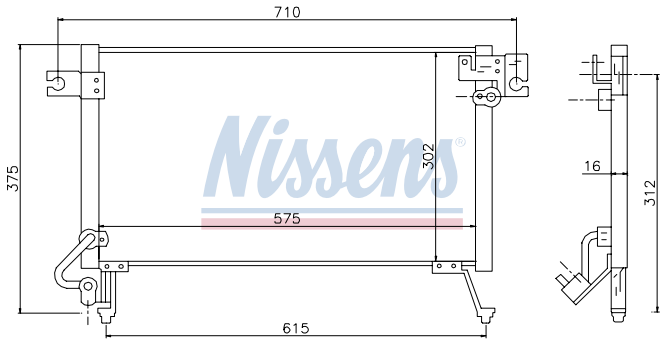

MITSUBISHI	SHOGUN (90-)
NISSAN	KING CAB D22 (98-)

94759

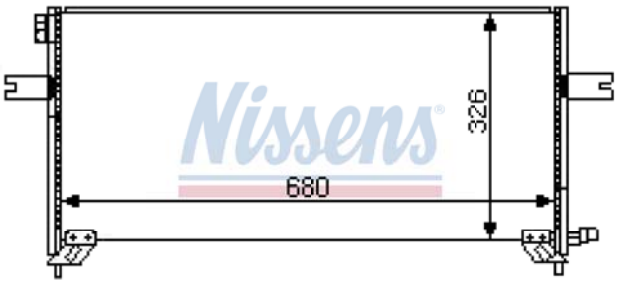

NISSAN	PICK UP D22 (98-)
MITSUBISHI	PAJERO (90-)

94784

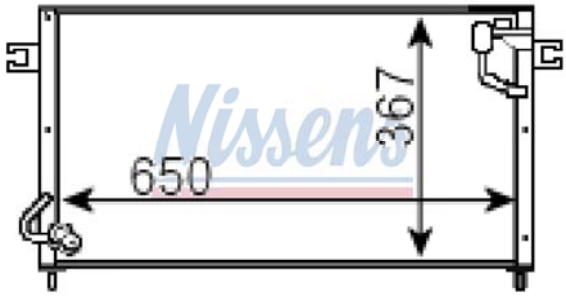

MITSUBISHI	SHOGUN (90-)
NISSAN	VANETTE CARGO (95-)

94787

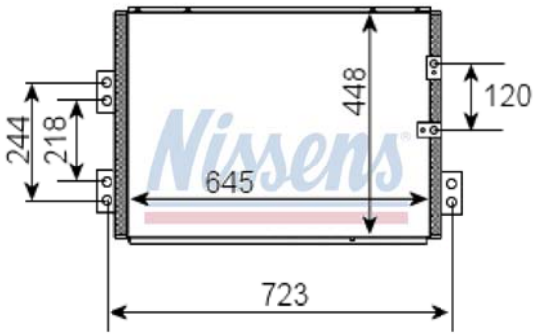

TOYOTA	HI-ACE (95-)
TOYOTA	HI-ACE (01-)

94790

94790

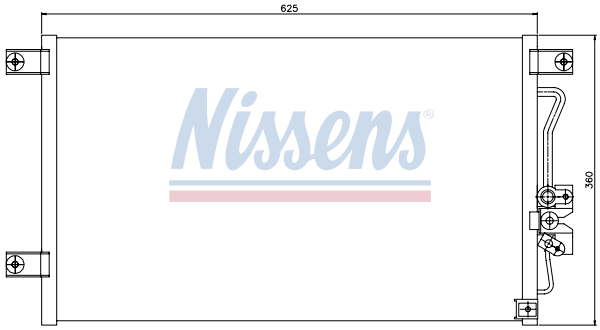

MITSUBISHI	MONTERO SPORT (98-)
MITSUBISHI	PAJERO SPORT (98-)

94797

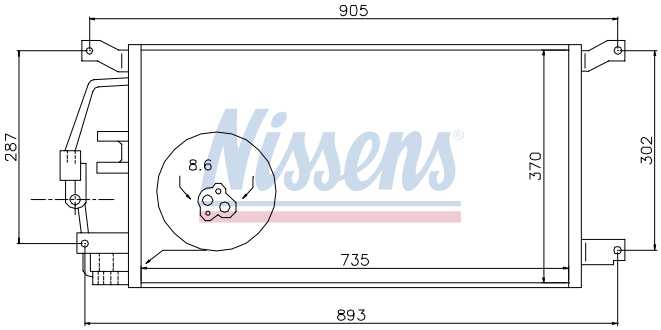

CHEVROLET
OLDSMOBILE
PONTIAC

94819

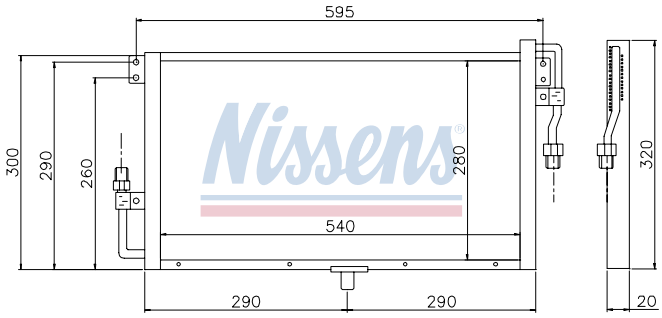

OPEL FRONTERA A (92-)

94836

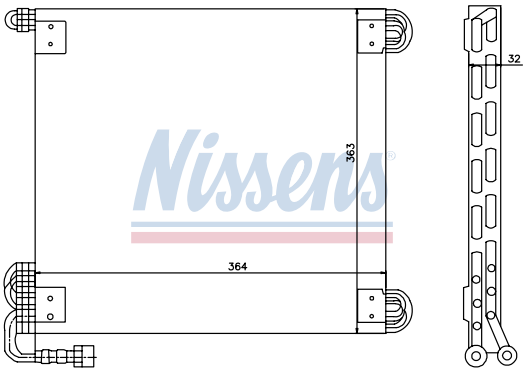

NISSAN ATLEON (97-)
NISSAN ECO (97-)

94843

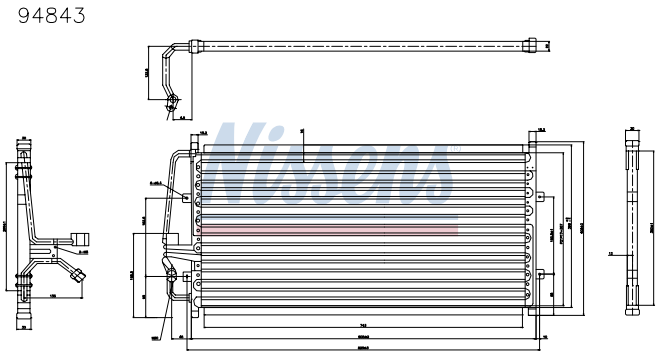

CHEVROLET
OLDSMOBILE
PONTIAC

95010

CITROEN
FIAT
PEUGEOT
LDV (96-)
OPEL

95031

OPEL MOVANO (98-)
RENAULT MASTER (98-)
RENAULT EXPRESS (91-)
RENAULT EXTRA (85-)
RENAULT EXTRA (91-)
RENAULT RAPID (85-)

95035

RENAULT	RAPID (91-)
MITSUBISHI	PAJERO (90-)
MITSUBISHI	SHOGUN (90-)
OPEL	COMBO (93-)
VAUXHALL	COMBO
TOYOTA	4 RUNNER (95-)
TOYOTA	DYNA (00-)

95063

TOYOTA
MITSUBISHI
CITROEN
PEUGEOT
FIAT

95170

FIAT
PEUGEOT
MAZDA
VOLKSWAGEN
CITROEN
MERCEDES
NISSAN

96729

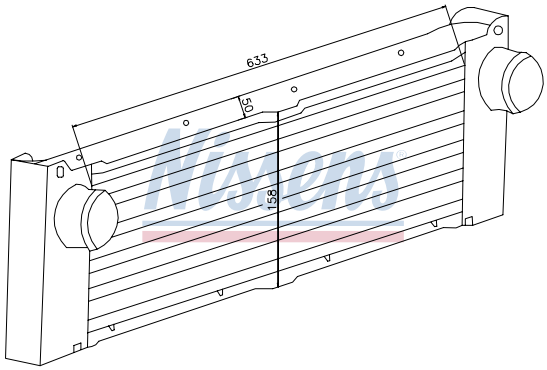

MERCEDES	VITO W 639 (03-)
MERCEDES	VIANO W 639 (03-)

96730

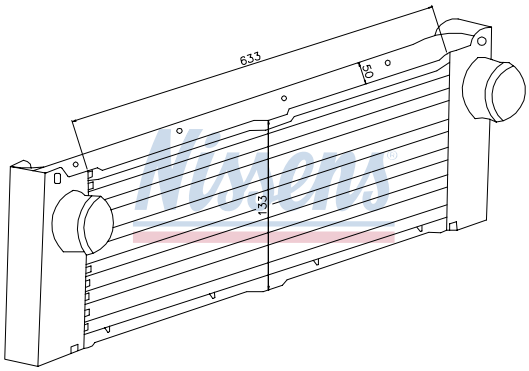

MERCEDES	VITO W 639 (03-)
FORD	TRANSIT (00-)

96733

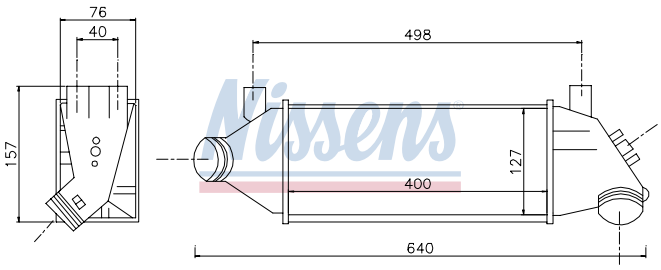

FORD	TRANSIT (00-)

96736

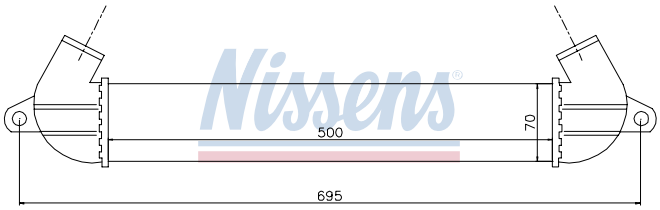

FIAT — DOBLO (01-)

96755

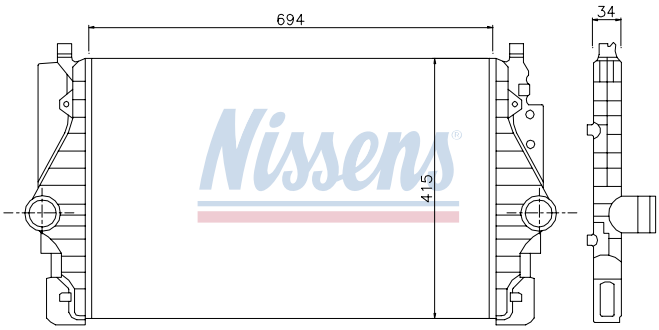

VOLKSWAGEN — TRANSPORTER T4 (90-)

96762

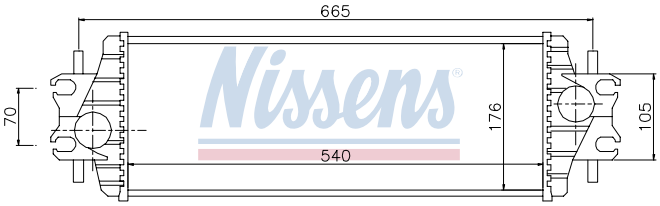

NISSAN — PRIMASTAR (02-)
OPEL — VIVARO (01-)
RENAULT — TRAFIC (01-)

96769

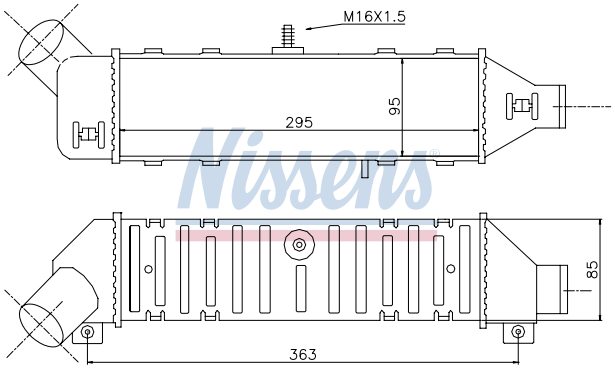

VOLKSWAGEN — CADDY (95-)
NISSAN — PRIMASTAR (02-)
OPEL — VIVARO (01-)
RENAULT — TRAFIC (01-)

96782

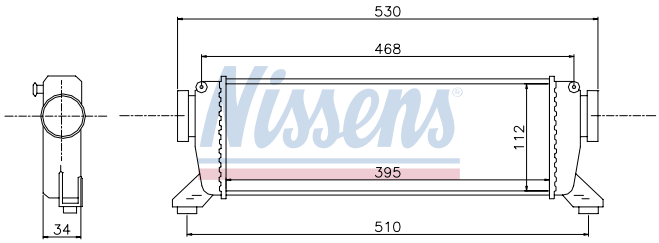

MERCEDES — VANEO (02-)
CITROEN — BERLINGO (02-)

96790

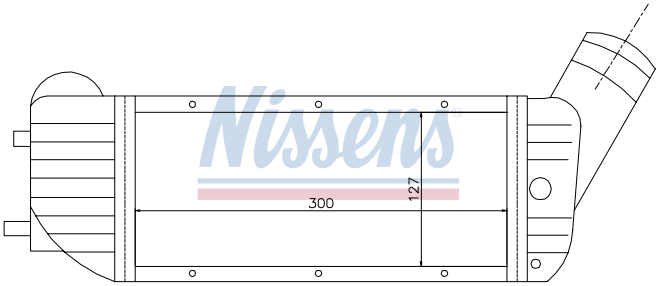

PEUGEOT — PARTNER (02-)
VOLKSWAGEN — CADDY (95-)
MERCEDES — SPRINTER (95-)
VOLKSWAGEN — LT (96-)

96842

VOLKSWAGEN	LT (03-)
MERCEDES	VITO W 638 (96-)
CITROEN	DISPATCH (95-)
CITROEN	JUMPY (95-)

96849

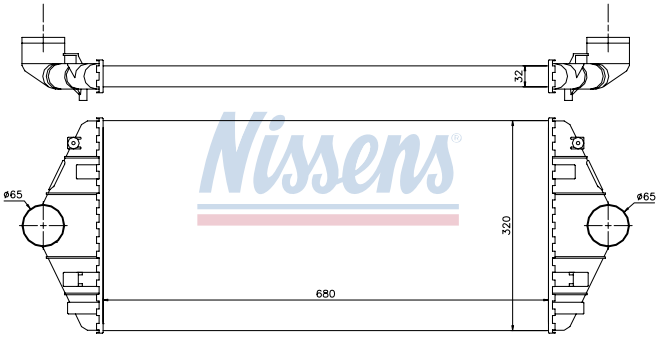

FIAT
PEUGEOT
CITROEN

96889

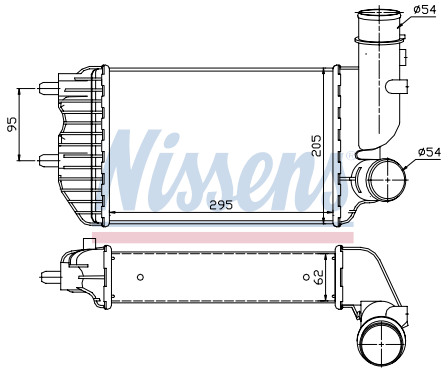

PEUGEOT
NISSAN
OPEL
RENAULT
MERCEDES
LDV (96-)

4 Cross reference list
Krydsreferenceliste
Umschlüsselungsliste
Liste de correspondances

OE ➡ Nissens

CHEVROLET LIGHT VAN	195	HYUNDAI LIGHT VAN	216	OLDSMOBILE LIGHT VAN	222	TALBOT LIGHT VAN	228
CITROEN LIGHT VAN	199	LDV (96-) LIGHT VAN	217	OPEL LIGHT VAN	222	TOYOTA LIGHT VAN	228
FIAT LIGHT VAN	201	MAZDA LIGHT VAN	217	PEUGEOT LIGHT VAN	224	VAUXHALL LIGHT VAN	229
FORD LIGHT VAN	203	MERCEDES LIGHT VAN	218	PONTIAC LIGHT VAN	225	VOLKSWAGEN LIGHT VAN	229
FORD USA LIGHT VAN	206	MITSUBISHI LIGHT VAN	220	RENAULT LIGHT VAN	226		
GMC LIGHT VAN	213	NISSAN LIGHT VAN	220	SEAT LIGHT VAN	227		

NOTES

CROSS REFERENCE LIST

O.E	Nissens	DRAW.	
CHEVROLET LIGHT VAN			
10312887	85409	B0409	LUMINA APV (97-)
10312887	85409	B0409	MONTANA (97-)
10312887	85409	B0409	TRANS SPORT (97-)
10312887	85409	B0409	VENTURE (97-)
10326292	94797	C0797	LUMINA APV (97-)
10326292	94797	C0797	MONTANA (97-)
10326292	94797	C0797	TRANS SPORT (97-)
10326292	94797	C0797	VENTURE (97-)
10339103	94797	C0797	LUMINA APV (97-)
10339103	94797	C0797	MONTANA (97-)
10339103	94797	C0797	TRANS SPORT (97-)
10339103	94797	C0797	VENTURE (97-)
10427834	85409	B0409	LUMINA APV (97-)
10427834	85409	B0409	MONTANA (97-)
10427834	85409	B0409	TRANS SPORT (97-)
10427834	85409	B0409	VENTURE (97-)
10427835	85409	B0409	LUMINA APV (97-)
10427835	85409	B0409	MONTANA (97-)
10427835	85409	B0409	TRANS SPORT (97-)
10427835	85409	B0409	VENTURE (97-)
10427836	85409	B0409	LUMINA APV (97-)
10427836	85409	B0409	MONTANA (97-)
10427836	85409	B0409	TRANS SPORT (97-)
10427836	85409	B0409	VENTURE (97-)
10427837	85409	B0409	LUMINA APV (97-)
10427837	85409	B0409	MONTANA (97-)
10427837	85409	B0409	TRANS SPORT (97-)
10427837	85409	B0409	VENTURE (97-)
10427858	85409	B0409	LUMINA APV (97-)
10427858	85409	B0409	MONTANA (97-)
10427858	85409	B0409	TRANS SPORT (97-)
10427858	85409	B0409	VENTURE (97-)
10430003	94797	C0797	LUMINA APV (97-)
10430003	94797	C0797	MONTANA (97-)
10430003	94797	C0797	TRANS SPORT (97-)
10430003	94797	C0797	VENTURE (97-)
12362508	85408	B0408	LUMINA APV (97-)
12362508	85408	B0408	MONTANA (97-)
12362508	85408	B0408	TRANS SPORT (97-)
12362508	85408	B0408	VENTURE (97-)
12365300	85408	B0408	LUMINA APV (97-)
12365300	85408	B0408	MONTANA (97-)
12365300	85408	B0408	TRANS SPORT (97-)
12365300	85408	B0408	VENTURE (97-)
12367289	85408	B0408	LUMINA APV (97-)
12367289	85408	B0408	MONTANA (97-)
12367289	85408	B0408	TRANS SPORT (97-)
12367289	85408	B0408	VENTURE (97-)
12367291	85408	B0408	LUMINA APV (97-)
12367291	85408	B0408	MONTANA (97-)
12367291	85408	B0408	TRANS SPORT (97-)
12367291	85408	B0408	VENTURE (97-)

O.E	Nissens	DRAW.	
(../..) CHEVROLET LIGHT VAN			
12368622	85408	B0408	LUMINA APV (97-)
12368622	85408	B0408	MONTANA (97-)
12368622	85408	B0408	TRANS SPORT (97-)
12368622	85408	B0408	VENTURE (97-)
12368634	85408	B0408	LUMINA APV (97-)
12368634	85408	B0408	MONTANA (97-)
12368634	85408	B0408	TRANS SPORT (97-)
12368634	85408	B0408	VENTURE (97-)
22136414	85408	B0408	LUMINA APV (97-)
22136414	85408	B0408	MONTANA (97-)
22136414	85408	B0408	TRANS SPORT (97-)
22136414	85408	B0408	VENTURE (97-)
3043390	60940	R0461	VAN G-SERIE (81-)
3043393	60940	R0461	VAN G-SERIE (81-)
3043394	60940	R0461	VAN G-SERIE (81-)
3043869	60940	R0461	VAN G-SERIE (81-)
3043870	60940	R0461	VAN G-SERIE (81-)
3043872	60940	R0461	VAN G-SERIE (81-)
3043873	60940	R0461	VAN G-SERIE (81-)
3043874	60970	R2091	BLAZER (82-)
3043874	60970A	R2091	BLAZER (82-)
3043874	60970	R2091	PICKUP R/V
3043874	60970A	R2091	PICKUP R/V
3043874	60970	R2091	SUBURBAN (81-)
3043874	60970A	R2091	SUBURBAN (81-)
3043874	60970	R2091	VAN G-SERIE (81-)
3043874	60970A	R2091	VAN G-SERIE (81-)
3043874	60970	R2091	VAN P-SERIE (81-)
3043874	60970A	R2091	VAN P-SERIE (81-)
3043875	60970	R2091	BLAZER (82-)
3043875	60970A	R2091	BLAZER (82-)
3043875	60970	R2091	PICKUP R/V
3043875	60970A	R2091	PICKUP R/V
3043875	60970	R2091	SUBURBAN (81-)
3043875	60970A	R2091	SUBURBAN (81-)
3043875	60970	R2091	VAN G-SERIE (81-)
3043875	60970A	R2091	VAN G-SERIE (81-)
3043875	60970	R2091	VAN P-SERIE (81-)
3043875	60970A	R2091	VAN P-SERIE (81-)
3043877	60971	R2092	BLAZER (82-)
3043877	60971	R2092	PICKUP C/K
3043877	60971	R2092	PICKUP R/V
3043877	60971	R2092	SUBURBAN (81-)
3043877	60971	R2092	VAN P-SERIE (81-)
3043881	60971	R2092	BLAZER (82-)
3043881	60971	R2092	PICKUP C/K
3043881	60971	R2092	PICKUP R/V
3043881	60971	R2092	SUBURBAN (81-)
3043881	60971	R2092	VAN P-SERIE (81-)
3043882	60971	R2092	BLAZER (82-)
3043882	60971	R2092	PICKUP C/K
3043882	60971	R2092	PICKUP R/V

CROSS REFERENCE LIST

(../..) CHEVROLET LIGHT VAN

O.E	Nissens	DRAW.	
3043882	60971	R2092	SUBURBAN (81-)
3043882	60971	R2092	VAN P-SERIE (81-)
3046774	60970	R2091	BLAZER (82-)
3046774	60970A	R2091	BLAZER (82-)
3046774	60970	R2091	PICKUP R/V
3046774	60970A	R2091	PICKUP R/V
3046774	60970	R2091	SUBURBAN (81-)
3046774	60970A	R2091	SUBURBAN (81-)
3046774	60970	R2091	VAN G-SERIE (81-)
3046774	60970A	R2091	VAN G-SERIE (81-)
3046774	60970	R2091	VAN P-SERIE (81-)
3046774	60970A	R2091	VAN P-SERIE (81-)
3046775	60970	R2091	BLAZER (82-)
3046775	60970A	R2091	BLAZER (82-)
3046775	60970	R2091	PICKUP R/V
3046775	60970A	R2091	PICKUP R/V
3046775	60970	R2091	SUBURBAN (81-)
3046775	60970A	R2091	SUBURBAN (81-)
3046775	60970	R2091	VAN G-SERIE (81-)
3046775	60970A	R2091	VAN G-SERIE (81-)
3046775	60970	R2091	VAN P-SERIE (81-)
3046775	60970A	R2091	VAN P-SERIE (81-)
3046776	60970	R2091	BLAZER (82-)
3046776	60970A	R2091	BLAZER (82-)
3046776	60970	R2091	PICKUP R/V
3046776	60970A	R2091	PICKUP R/V
3046776	60970	R2091	SUBURBAN (81-)
3046776	60970A	R2091	SUBURBAN (81-)
3046776	60970	R2091	VAN G-SERIE (81-)
3046776	60970A	R2091	VAN G-SERIE (81-)
3046776	60970	R2091	VAN P-SERIE (81-)
3046776	60970A	R2091	VAN P-SERIE (81-)
3046777	60971	R2092	BLAZER (82-)
3046777	60971	R2092	PICKUP C/K
3046777	60971	R2092	PICKUP R/V
3046777	60971	R2092	SUBURBAN (81-)
3046777	60971	R2092	VAN P-SERIE (81-)
3047098	60940	R0461	VAN G-SERIE (81-)
3047100	60940	R0461	VAN G-SERIE (81-)
3047101	60940	R0461	VAN G-SERIE (81-)
3047102	60940	R0461	VAN G-SERIE (81-)
3047103	60940	R0461	VAN G-SERIE (81-)
3047932	60940	R0461	VAN G-SERIE (81-)
3048771	60960	R2095	BLAZER (82-)
3048771	60960	R2095	PICKUP S/T
3048772	60960	R2095	BLAZER (82-)
3048772	60960	R2095	PICKUP S/T
3049127	60974	R2104	BLAZER (82-)
3049127	60974	R2104	PICKUP C/K
3049127	60974	R2104	PICKUP R/V
3049127	60974	R2104	SUBURBAN (81-)
3049127	60974	R2104	VAN G-SERIE (81-)

(../..) CHEVROLET LIGHT VAN

O.E	Nissens	DRAW.	
3049127	60974	R2104	VAN P-SERIE (81-)
3049170	60940	R0461	VAN G-SERIE (81-)
3049171	60940	R0461	VAN G-SERIE (81-)
3049774	60970	R2091	PICKUP R/V
3049774	60970A	R2091	PICKUP R/V
3052724	60974	R2104	BLAZER (82-)
3052724	60974	R2104	PICKUP C/K
3052724	60974	R2104	PICKUP R/V
3052724	60974	R2104	SUBURBAN (81-)
3052724	60974	R2104	VAN G-SERIE (81-)
3052724	60974	R2104	VAN P-SERIE (81-)
3053701	60974	R2104	BLAZER (82-)
3053701	60974	R2104	PICKUP C/K
3053701	60974	R2104	PICKUP R/V
3053701	60974	R2104	SUBURBAN (81-)
3053701	60974	R2104	VAN G-SERIE (81-)
3053701	60974	R2104	VAN P-SERIE (81-)
3054215	60960	R2095	BLAZER (82-)
3054215	60960	R2095	PICKUP S/T
3055259	60974	R2104	BLAZER (82-)
3055259	60974	R2104	PICKUP C/K
3055259	60974	R2104	PICKUP R/V
3055259	60974	R2104	SUBURBAN (81-)
3055259	60974	R2104	VAN G-SERIE (81-)
3055259	60974	R2104	VAN P-SERIE (81-)
3055364	60971	R2092	BLAZER (82-)
3055364	60971	R2092	PICKUP C/K
3055364	60971	R2092	PICKUP R/V
3055364	60971	R2092	SUBURBAN (81-)
3055364	60971	R2092	VAN P-SERIE (81-)
3055365	60971	R2092	BLAZER (82-)
3055365	60971	R2092	PICKUP C/K
3055365	60971	R2092	PICKUP R/V
3055365	60971	R2092	SUBURBAN (81-)
3055365	60971	R2092	VAN P-SERIE (81-)
3055366	60971	R2092	BLAZER (82-)
3055366	60971	R2092	PICKUP C/K
3055366	60971	R2092	PICKUP R/V
3055366	60971	R2092	SUBURBAN (81-)
3055366	60971	R2092	VAN P-SERIE (81-)
3055694	60960	R2095	BLAZER (82-)
3055694	60960	R2095	PICKUP S/T
3057965	60974	R2104	BLAZER (82-)
3057965	60974	R2104	PICKUP C/K
3057965	60974	R2104	PICKUP R/V
3057965	60974	R2104	SUBURBAN (81-)
3057965	60974	R2104	VAN G-SERIE (81-)
3057965	60974	R2104	VAN P-SERIE (81-)
3057966	60974	R2104	BLAZER (82-)
3057966	60974	R2104	PICKUP C/K
3057966	60974	R2104	PICKUP R/V
3057966	60974	R2104	SUBURBAN (81-)

CROSS REFERENCE LIST

O.E	Nissens	DRAW.	
(../..) CHEVROLET LIGHT VAN			
3057966	60974	R2104	VAN G-SERIE (81-)
3057966	60974	R2104	VAN P-SERIE (81-)
3057969	60940	R0461	VAN G-SERIE (81-)
3057976	60940	R0461	VAN G-SERIE (81-)
3057977	60940	R0461	VAN G-SERIE (81-)
3057978	60974	R2104	BLAZER (82-)
3057978	60974	R2104	PICKUP C/K
3057978	60974	R2104	PICKUP R/V
3057978	60974	R2104	SUBURBAN (81-)
3057978	60974	R2104	VAN G-SERIE (81-)
3057978	60974	R2104	VAN P-SERIE (81-)
3057983	60974	R2104	BLAZER (82-)
3057983	60974	R2104	PICKUP C/K
3057983	60974	R2104	PICKUP R/V
3057983	60974	R2104	SUBURBAN (81-)
3057983	60974	R2104	VAN G-SERIE (81-)
3057983	60974	R2104	VAN P-SERIE (81-)
3058768	609691	R2099	PICKUP C/K
3058970	60971	R2092	BLAZER (82-)
3058970	60971	R2092	PICKUP C/K
3058970	60971	R2092	PICKUP R/V
3058970	60971	R2092	SUBURBAN (81-)
3058970	60971	R2092	VAN P-SERIE (81-)
3058989	60970	R2091	BLAZER (82-)
3058989	60970A	R2091	BLAZER (82-)
3058989	60970	R2091	PICKUP R/V
3058989	60970A	R2091	PICKUP R/V
3058989	60970	R2091	SUBURBAN (81-)
3058989	60970A	R2091	SUBURBAN (81-)
3058989	60970	R2091	VAN G-SERIE (81-)
3058989	60970A	R2091	VAN G-SERIE (81-)
3058989	60970	R2091	VAN P-SERIE (81-)
3058989	60970A	R2091	VAN P-SERIE (81-)
3058993	60970	R2091	BLAZER (82-)
3058993	60970A	R2091	BLAZER (82-)
3058993	60970	R2091	PICKUP R/V
3058993	60970A	R2091	PICKUP R/V
3058993	60970	R2091	SUBURBAN (81-)
3058993	60970A	R2091	SUBURBAN (81-)
3058993	60970	R2091	VAN G-SERIE (81-)
3058993	60970A	R2091	VAN G-SERIE (81-)
3058993	60970	R2091	VAN P-SERIE (81-)
3058993	60970A	R2091	VAN P-SERIE (81-)
3058995	60971	R2092	BLAZER (82-)
3058995	60971	R2092	PICKUP C/K
3058995	60971	R2092	PICKUP R/V
3058995	60971	R2092	SUBURBAN (81-)
3058995	60971	R2092	VAN P-SERIE (81-)
52450025	60968A	R2090	BLAZER (82-)
52450025	60968A	R2090	PICKUP S/T
52450026	60968A	R2090	BLAZER (82-)
52450026	60968A	R2090	PICKUP S/T

O.E	Nissens	DRAW.	
(../..) CHEVROLET LIGHT VAN			
52450273	60972	R2096	PICKUP R/V
52450273	60972	R2096	SUBURBAN (81-)
52450274	60972	R2096	PICKUP R/V
52450274	60972	R2096	SUBURBAN (81-)
52450275	60972	R2096	PICKUP R/V
52450275	60972	R2096	SUBURBAN (81-)
52451292	60962	R2094	LUMINA APV (89-)
52451293	60962	R2094	LUMINA APV (89-)
52452672	60962	R2094	LUMINA APV (89-)
52452673	60962	R2094	LUMINA APV (89-)
52452682	60968A	R2090	BLAZER (82-)
52452682	60968A	R2090	PICKUP S/T
52452954	60968A	R2090	BLAZER (82-)
52452954	60968A	R2090	PICKUP S/T
52453114	94393	C0439	LUMINA APV (89-)
52453114	94393	C0439	MONTANA (89-)
52453114	94393	C0439	TRANS SPORT (89-)
52453114	94393	C0439	VENTURE (89-)
52453959	94393	C0439	LUMINA APV (89-)
52453959	94393	C0439	MONTANA (89-)
52453959	94393	C0439	TRANS SPORT (89-)
52453959	94393	C0439	VENTURE (89-)
52457626	60967	R2093	PICKUP C/K
52457627	60967	R2093	PICKUP C/K
52457628	60967	R2093	PICKUP C/K
52457635	60971	R2092	BLAZER (82-)
52457635	60971	R2092	PICKUP C/K
52457635	60971	R2092	PICKUP R/V
52457635	60971	R2092	SUBURBAN (81-)
52457635	60971	R2092	VAN P-SERIE (81-)
52457636	60971	R2092	BLAZER (82-)
52457636	60971	R2092	PICKUP C/K
52457636	60971	R2092	PICKUP R/V
52457636	60971	R2092	SUBURBAN (81-)
52457636	60971	R2092	VAN P-SERIE (81-)
52457637	60971	R2092	BLAZER (82-)
52457637	60971	R2092	PICKUP C/K
52457637	60971	R2092	PICKUP R/V
52457637	60971	R2092	SUBURBAN (81-)
52457637	60971	R2092	VAN P-SERIE (81-)
52457638	60971	R2092	BLAZER (82-)
52457638	60971	R2092	PICKUP C/K
52457638	60971	R2092	PICKUP R/V
52457638	60971	R2092	SUBURBAN (81-)
52457638	60971	R2092	VAN P-SERIE (81-)
52457639	60972	R2096	PICKUP R/V
52457639	60972	R2096	SUBURBAN (81-)
52457640	60972	R2096	PICKUP R/V
52457640	60972	R2096	SUBURBAN (81-)
52457641	60949	R2105	BLAZER (82-)
52457641	60949	R2105	PICKUP C/K
52457641	60949	R2105	PICKUP R/V

CROSS REFERENCE LIST

(../..) CHEVROLET LIGHT VAN

O.E	Nissens	DRAW.	
52457641	60949	R2105	SUBURBAN (81-)
52457641	60949	R2105	VAN P-SERIE (81-)
52457642	60949	R2105	BLAZER (82-)
52457642	60949	R2105	PICKUP C/K
52457642	60949	R2105	PICKUP R/V
52457642	60949	R2105	SUBURBAN (81-)
52457642	60949	R2105	VAN P-SERIE (81-)
52457643	60949	R2105	BLAZER (82-)
52457643	60949	R2105	PICKUP C/K
52457643	60949	R2105	PICKUP R/V
52457643	60949	R2105	SUBURBAN (81-)
52457643	60949	R2105	VAN P-SERIE (81-)
52457645	60970	R2091	BLAZER (82-)
52457645	60970A	R2091	BLAZER (82-)
52457645	60970	R2091	PICKUP R/V
52457645	60970A	R2091	PICKUP R/V
52457645	60970	R2091	SUBURBAN (81-)
52457645	60970A	R2091	SUBURBAN (81-)
52457645	60970	R2091	VAN G-SERIE (81-)
52457645	60970A	R2091	VAN G-SERIE (81-)
52457645	60970	R2091	VAN P-SERIE (81-)
52457645	60970A	R2091	VAN P-SERIE (81-)
52457646	60970	R2091	BLAZER (82-)
52457646	60970A	R2091	BLAZER (82-)
52457646	60970	R2091	PICKUP R/V
52457646	60970A	R2091	PICKUP R/V
52457646	60970	R2091	SUBURBAN (81-)
52457646	60970A	R2091	SUBURBAN (81-)
52457646	60970	R2091	VAN G-SERIE (81-)
52457646	60970A	R2091	VAN G-SERIE (81-)
52457646	60970	R2091	VAN P-SERIE (81-)
52457646	60970A	R2091	VAN P-SERIE (81-)
52457702	60946	R3274	BLAZER (82-)
52457702	60946A		BLAZER (82-)
52457702	60946	R3274	PICKUP C/K
52457702	60946A		PICKUP C/K
52457702	60946	R3274	SUBURBAN (92-)
52457702	60946A		SUBURBAN (92-)
52457840	609691	R2099	PICKUP C/K
52457841	609691	R2099	PICKUP C/K
52457842	609691	R2099	PICKUP C/K
52457843	609691	R2099	PICKUP C/K
52458331	609691	R2099	PICKUP C/K
52458334	609691	R2099	PICKUP C/K
52458845	60946	R3274	BLAZER (82-)
52458845	60946A		BLAZER (82-)
52458845	60946	R3274	PICKUP C/K
52458845	60946A		PICKUP C/K
52458845	60946	R3274	SUBURBAN (92-)
52458845	60946A		SUBURBAN (92-)
52458924	60946	R3274	BLAZER (82-)
52458924	60946A		BLAZER (82-)

(../..) CHEVROLET LIGHT VAN

O.E	Nissens	DRAW.	
52458924	60946	R3274	PICKUP C/K
52458924	60946A		PICKUP C/K
52458924	60946	R3274	SUBURBAN (92-)
52458924	60946A		SUBURBAN (92-)
52458925	60946	R3274	BLAZER (82-)
52458925	60946A		BLAZER (82-)
52458925	60946	R3274	PICKUP C/K
52458925	60946A		PICKUP C/K
52458925	60946	R3274	SUBURBAN (92-)
52458925	60946A		SUBURBAN (92-)
52458927	60946	R3274	BLAZER (82-)
52458927	60946A		BLAZER (82-)
52458927	60946	R3274	PICKUP C/K
52458927	60946A		PICKUP C/K
52458927	60946	R3274	SUBURBAN (92-)
52458927	60946A		SUBURBAN (92-)
52458928	60946	R3274	BLAZER (82-)
52458928	60946A		BLAZER (82-)
52458928	60946	R3274	PICKUP C/K
52458928	60946A		PICKUP C/K
52458928	60946	R3274	SUBURBAN (92-)
52458928	60946A		SUBURBAN (92-)
52458931	60959	R2098	BLAZER (82-)
52458931	60959	R2098	PICKUP C/K
52458932	60959	R2098	BLAZER (82-)
52458932	60959	R2098	PICKUP C/K
52458933	60959	R2098	BLAZER (82-)
52458933	60959	R2098	PICKUP C/K
52458934	60959	R2098	BLAZER (82-)
52458934	60959	R2098	PICKUP C/K
52458935	60959	R2098	BLAZER (82-)
52458935	60959	R2098	PICKUP C/K
52459535	60946	R3274	BLAZER (82-)
52459535	60946A		BLAZER (82-)
52459535	60946	R3274	PICKUP C/K
52459535	60946A		PICKUP C/K
52459535	60946	R3274	SUBURBAN (92-)
52459535	60946A		SUBURBAN (92-)
52459679	609691	R2099	PICKUP C/K
52461229	94394	C0440	LUMINA APV (89-)
52461229	94394	C0440	MONTANA (89-)
52461229	94394	C0440	TRANS SPORT (89-)
52461229	94394	C0440	VENTURE (89-)
52461601	608911	R2431	VAN G-SERIE (81-)
52461782	60946	R3274	BLAZER (82-)
52461782	60946A		BLAZER (82-)
52461782	60946	R3274	PICKUP C/K
52461782	60946A		PICKUP C/K
52461782	60946	R3274	SUBURBAN (92-)
52461782	60946A		SUBURBAN (92-)
52462547	60915A	R2546	BLAZER (94-)
52462547	60915A	R2546	BRAVADA (94-)

CROSS REFERENCE LIST

O.E	Nissens	DRAW.	
(../..) CHEVROLET LIGHT VAN			
52462547	60915A	R2546	PICKUP S/T
52462548	60915A	R2546	BLAZER (94-)
52462548	60915A	R2546	BRAVADA (94-)
52462548	60915A	R2546	PICKUP S/T
52465218	60946	R3274	BLAZER (82-)
52465218	60946A		BLAZER (82-)
52465218	60946	R3274	PICKUP C/K
52465218	60946A		PICKUP C/K
52465218	60946	R3274	SUBURBAN (92-)
52465218	60946A		SUBURBAN (92-)
52465219	60945	R2109	PICKUP C/K
52465219	60945	R2109	SUBURBAN (92-)
52465849	609691	R2099	PICKUP C/K
52465850	609691	R2099	PICKUP C/K
52467213	609691	R2099	PICKUP C/K
52470366	608911	R2431	VAN G-SERIE (81-)
52470376	608911	R2431	VAN G-SERIE (81-)
52472963	609361	R2439	BLAZER (94-)
52472963	60936A	R2439	BLAZER (94-)
52472963	609361	R2439	BRAVADA (94-)
52472963	60936A	R2439	BRAVADA (94-)
52472963	609361	R2439	PICKUP S/T
52472963	60936A	R2439	PICKUP S/T
52473484	69195A	R2800	PICKUP S10
52477222	60962	R2094	LUMINA APV (89-)
52477673	94843	C0843	LUMINA APV (97-)
52477673	94843	C0843	MONTANA (97-)
52477673	94843	C0843	TRANS SPORT (97-)
52477673	94843	C0843	VENTURE (97-)
52481751	60945	R2109	SUBURBAN (92-)
52486810	94843	C0843	LUMINA APV (97-)
52486810	94843	C0843	MONTANA (97-)
52486810	94843	C0843	TRANS SPORT (97-)
52486810	94843	C0843	VENTURE (97-)
CITROEN LIGHT VAN			
0384.E4	96889	I0142	JUMPER (94-)
0384.E4	96889	I0142	JUMPER (02-)
0384.E4	96889	I0142	RELAY (02-)
0384.E4	96889	I0142	RELAY (94-)
0384.E7	96849	I0107	DISPATCH (95-)
0384.E7	96849	I0107	JUMPY (95-)
0384.F6	96790	I0340	BERLINGO (02-)
1103.E8	90604	0000	JUMPER (94-)
1103.E8	90604	0000	RELAY (94-)
1250.E9	85074	B0074	BERLINGO (96-)
1250.F1	85083	B0083	BERLINGO (96-)
1253.41	85004	B0004	DISPATCH (95-)
1253.41	85004	B0004	JUMPY (95-)
1253.42	85004	B0004	DISPATCH (95-)
1253.42	85006	B0006	DISPATCH (95-)
1253.42	85004	B0004	JUMPY (95-)

O.E	Nissens	DRAW.	
(../..) CITROEN LIGHT VAN			
1253.42	85006	B0006	JUMPY (95-)
1253.47	85006	B0006	DISPATCH (95-)
1253.47	85006	B0006	JUMPY (95-)
1253.51	85317	B0317	BERLINGO (96-)
1253.63	85318	B0318	BERLINGO (96-)
1253.87	85084	B0085	BERLINGO (96-)
1253.A7	85316	B0316	BERLINGO (02-)
1254.68	85317	B0317	BERLINGO (96-)
1254.69	85004	B0004	DISPATCH (95-)
1254.69	85006	B0006	DISPATCH (95-)
1254.69	85004	B0004	JUMPY (95-)
1254.69	85006	B0006	JUMPY (95-)
1254.70	85318	B0318	BERLINGO (96-)
1254.71	85004	B0004	DISPATCH (95-)
1254.71	85006	B0006	DISPATCH (95-)
1254.71	85004	B0004	JUMPY (95-)
1254.71	85006	B0006	JUMPY (95-)
1254.74	85074	B0074	BERLINGO (96-)
1254.74	85083	B0083	BERLINGO (96-)
1254.85	85084	B0085	BERLINGO (96-)
1300.F7	63572	R0776	C 25 (81-)
1300.F8	63572	R0776	C 25 (81-)
1300.G0	63561	R0774	C 25 (81-)
1300.K1	63561	R0774	C 25 (81-)
1301.HQ	61390A	R1294	JUMPER (94-)
1301.HQ	61390A	R1294	RELAY (94-)
1301.HS	61390A	R1294	JUMPER (94-)
1301.HS	61390A	R1294	RELAY (94-)
1301.JK	61862	R1427	JUMPER (94-)
1301.JK	61862	R1427	RELAY (94-)
1301.N0	61390A	R1294	JUMPER (94-)
1301.N0	61390A	R1294	RELAY (94-)
1301.N2	61390A	R1294	JUMPER (94-)
1301.N2	61390A	R1294	RELAY (94-)
1301.N3	61390A	R1294	JUMPER (94-)
1301.N3	61390A	R1294	RELAY (94-)
1301.N6	61393	R1435	JUMPER (94-)
1301.N6	61393	R1435	RELAY (94-)
1301.NO	61390A	R1294	JUMPER (94-)
1301.NO	61390A	R1294	RELAY (94-)
1301.P3	61875A	R1606	DISPATCH (95-)
1301.P3	61875A	R1606	JUMPY (95-)
1301.P6	61390A	R1294	JUMPER (94-)
1301.P6	61390A	R1294	RELAY (94-)
1301.Y2	61337	R1889	C 15 (84-)
1301.Y4	61875A	R1606	DISPATCH (95-)
1301.Y4	61875A	R1606	JUMPY (95-)
1301.Y7	61875A	R1606	DISPATCH (95-)
1301.Y7	61875A	R1606	JUMPY (95-)
1301.Z0	61875A	R1606	DISPATCH (95-)
1301.Z0	61875A	R1606	JUMPY (95-)
1305.51	63561	R0774	C 25 (81-)

CROSS REFERENCE LIST

O.E	Nissens	DRAW.	
(../..) CITROEN LIGHT VAN			
1305199080	85021	B0021	JUMPER (02-)
1305199080	85021	B0021	RELAY (02-)
1305559080	85020	B0020	JUMPER (94-)
1305559080	85020	B0020	JUMPER (02-)
1305559080	85020	B0020	RELAY (02-)
1305559080	85020	B0020	RELAY (94-)
1307156080	73984	H0228	JUMPER (94-)
1307156080	73987	H0462	JUMPER (94-)
1307156080	73984	H0228	RELAY (94-)
1307156080	73987	H0462	RELAY (94-)
1307390080	61390A	R1294	JUMPER (94-)
1307390080	61390A	R1294	RELAY (94-)
1307394080	61390A	R1294	JUMPER (94-)
1307394080	61390A	R1294	RELAY (94-)
1308.H2	85318	B0318	BERLINGO (96-)
1308.J1	85004	B0004	DISPATCH (95-)
1308.J1	85006	B0006	DISPATCH (95-)
1308.J1	85004	B0004	JUMPY (95-)
1308.J1	85006	B0006	JUMPY (95-)
1308.N9	85084	B0085	BERLINGO (96-)
1308.P3	85074	B0074	BERLINGO (96-)
1308.P4	85083	B0083	BERLINGO (96-)
1308.V7	85316	B0316	BERLINGO (02-)
1311004080	61390A	R1294	JUMPER (94-)
1311004080	61390A	R1294	RELAY (94-)
1317828080	61390A	R1294	JUMPER (94-)
1317828080	61390A	R1294	RELAY (94-)
1321310080	73987	H0462	JUMPER (94-)
1321310080	73987	H0462	RELAY (94-)
1328088080	85020	B0020	JUMPER (94-)
1328088080	85020	B0020	JUMPER (02-)
1328088080	85021	B0021	JUMPER (02-)
1328088080	85020	B0020	RELAY (02-)
1328088080	85021	B0021	RELAY (02-)
1328088080	85020	B0020	RELAY (94-)
1329227080	61390A	R1294	JUMPER (02-)
1329227080	61390A	R1294	RELAY (02-)
1330.07	63546	R1853	BERLINGO (96-)
1330.08	63547	R1854	BERLINGO (96-)
1330.09	63508A	R2004	BERLINGO (96-)
1330.10	63509A	R2145	BERLINGO (96-)
1330.17	61390A	R1294	JUMPER (94-)
1330.17	61390A	R1294	RELAY (94-)
1330.24	63508A	R2004	BERLINGO (96-)
1330.41	61315A	R2298	BERLINGO (96-)
1330.42	61326A	R2294	BERLINGO (96-)
1330.47	63716	R2640	BERLINGO (96-)
1330.52	63715	R2641	BERLINGO (96-)
1330.55	61326A	R2294	BERLINGO (96-)
1330.57	61326A	R2294	BERLINGO (96-)
1330.58	61326A	R2294	BERLINGO (96-)
1330.82	63719A	R2689	BERLINGO (02-)

O.E	Nissens	DRAW.	
(../..) CITROEN LIGHT VAN			
1330.97	61390A	R1294	JUMPER (02-)
1330.97	61390A	R1294	RELAY (02-)
1330.98	61390A	R1294	JUMPER (02-)
1330.98	61390A	R1294	RELAY (02-)
1330.C9	61326A	R2294	BERLINGO (96-)
1330.F4	63719A	R2689	BERLINGO (02-)
1330.G3	63719A	R2689	BERLINGO (02-)
1330.K6	61337	R1889	C 15 (84-)
1330.N7	63719A	R2689	BERLINGO (02-)
1331.CP	63715	R2641	BERLINGO (96-)
1331.CT	63716	R2640	BERLINGO (96-)
1331.CW	61326A	R2294	BERLINGO (96-)
1331.FG	61326A	R2294	BERLINGO (96-)
1331.PY	61351	R0727	C 15 (84-)
1331.Q4	61390A	R1294	JUMPER (94-)
1331.Q4	61390A	R1294	RELAY (94-)
1331.Q7	63508A	R2004	BERLINGO (96-)
1331.QH	61357	R0794	C 15 (84-)
1331.QJ	61353	R0795	C 15 (84-)
1331.QT	63561	R0774	C 25 (81-)
1331.RT	61390A	R1294	JUMPER (94-)
1331.RV	61393	R1435	JUMPER (94-)
1331.RV	61393	R1435	RELAY (94-)
1333.48	61390A	R1294	JUMPER (94-)
1471087080	85004	B0004	DISPATCH (95-)
1471087080	85006	B0006	DISPATCH (95-)
1471087080	85004	B0004	JUMPY (95-)
1471087080	85006	B0006	JUMPY (95-)
1474411080	85004	B0004	DISPATCH (95-)
1474411080	85004	B0004	JUMPY (95-)
1474412080	85004	B0004	DISPATCH (95-)
1474412080	85006	B0006	DISPATCH (95-)
1474412080	85004	B0004	JUMPY (95-)
1474412080	85006	B0006	JUMPY (95-)
1474413080	85004	B0004	DISPATCH (95-)
1474413080	85006	B0006	DISPATCH (95-)
1474413080	85004	B0004	JUMPY (95-)
1474413080	85006	B0006	JUMPY (95-)
1474414080	85004	B0004	DISPATCH (95-)
1474414080	85006	B0006	DISPATCH (95-)
1474414080	85004	B0004	JUMPY (95-)
1474414080	85006	B0006	JUMPY (95-)
1475844080	61875A	R1606	DISPATCH (95-)
1475844080	61875A	R1606	JUMPY (95-)
1475845080	61875A	R1606	DISPATCH (95-)
1475845080	61875A	R1606	JUMPY (95-)
1475974080	85006	B0006	DISPATCH (95-)
1475974080	85006	B0006	JUMPY (95-)
1711.7.559.273	95109	F0045	BERLINGO (96-)
46722710	71443	H0371	JUMPER (94-)
46722710	73987	H0462	JUMPER (94-)
46722710	71443	H0371	RELAY (94-)

CROSS REFERENCE LIST

O.E	Nissens	DRAW.	
(../..) CITROEN LIGHT VAN			
46722710	73987	H0462	RELAY (94-)
5699172	63572	R0776	C 25 (81-)
5947797	71148	H0146	C 25 (81-)
5969174	63561	R0774	C 25 (81-)
5981189	63569	R0775	C 25 (81-)
6444.B9	92205	K0160	BERLINGO (96-)
6444.B9	92205	K0160	BERLINGO (02-)
6448.48	71148	H0146	C 25 (81-)
6448.78	71156	H0235	BERLINGO (96-)
6448.78	71156	H0235	BERLINGO (02-)
6448.80	71147	H0091	BERLINGO (96-)
6448.80	71156	H0235	BERLINGO (96-)
6448.81	71156	H0235	BERLINGO (96-)
6448.81	71156	H0235	BERLINGO (02-)
6448.93	73984	H0228	JUMPER (94-)
6448.93	73987	H0462	JUMPER (94-)
6448.93	73984	H0228	RELAY (94-)
6448.93	73987	H0462	RELAY (94-)
6448.A7	71149	H0254	DISPATCH (95-)
6448.A7	71149	H0254	JUMPY (95-)
6448.F9	73984	H0228	JUMPER (94-)
6448.F9	73987	H0462	JUMPER (94-)
6448.F9	73984	H0228	RELAY (94-)
6448.F9	73987	H0462	RELAY (94-)
6448.H8	73986	H0403	JUMPER (94-)
6448.H8	73987	H0462	JUMPER (94-)
6448.H8	73986	H0403	JUMPER (02-)
6448.H8	73986	H0403	RELAY (02-)
6448.H8	73986	H0403	RELAY (94-)
6448.H8	73987	H0462	RELAY (94-)
6453.P8	95011	F0005	BERLINGO (96-)
6455.AH	95346	F0279	BERLINGO (02-)
6455.AJ	95346	F0279	BERLINGO (02-)
6455.AK	95346	F0279	BERLINGO (02-)
6455.AT	94542	C0544	BERLINGO (02-)
6455.AV	94313	C0321	BERLINGO (96-)
6455.CV	94542	C0544	BERLINGO (02-)
6455.Q6	94210	C0192	DISPATCH (95-)
6455.Q6	94210	C0192	JUMPY (95-)
6455.Q7	95010	F0039	DISPATCH (95-)
6455.Q7	95010	F0039	JUMPY (95-)
6455.Q9	94200	C0209	BERLINGO (96-)
6455.T3	94700	C0700	JUMPER (94-)
6455.T3	94700	C0700	RELAY (94-)
6455.T4	95105	F0287	JUMPER (94-)
6455.T4	95105	F0287	RELAY (94-)
6455.V8	94218	C0221	BERLINGO (96-)
6455.V9	94313	C0321	BERLINGO (96-)
6455.W4	94276	C0291	BERLINGO (96-)
6455.X7	95202	F0046	BERLINGO (96-)
6455.X8	95109	F0045	BERLINGO (96-)
6455.Y2	94276	C0291	BERLINGO (96-)

O.E	Nissens	DRAW.	
(../..) CITROEN LIGHT VAN			
6455.Y9	94542	C0544	BERLINGO (02-)
7.559.273	95109	F0045	BERLINGO (96-)
75515461	71130	H0187	C 15 (84-)
91513957	63600	R0385	LNA (82-)
92512385	72960	H0041	LNA (82-)
95496528	61351	R0727	C 15 (84-)
95606691	61220	R0042	C 15 (84-)
95606692	61190	R0040	C 15 (84-)
9566945280	92170	K0143	DISPATCH (95-)
9566945280	92170	K0143	JUMPY (95-)
96029201	61357	R0794	C 15 (84-)
96029202	61353	R0795	C 15 (84-)
96103384	71156	H0235	BERLINGO (96-)
96103384	71156	H0235	BERLINGO (02-)
9610829080	95011	F0005	BERLINGO (96-)
96275074	63508A	R2004	BERLINGO (96-)
96347974	61326A	R2294	BERLINGO (96-)
9636622980	95202	F0046	BERLINGO (96-)
9636635380	96790	I0340	BERLINGO (02-)
9637416580	94542	C0544	BERLINGO (02-)
ZF05931556	63572	R0776	C 25 (81-)
ZF05969174	63561	R0774	C 25 (81-)
ZF05981189	63558	R0359	C 25 (81-)
ZF07555444	63557	R0354	C 25 (81-)
ZF07555802	63561	R0774	C 25 (81-)
ZF07619387	71144	H0123	C 25 (81-)
ZF5929122	72980	H0043	C 25 (81-)
FIAT LIGHT VAN			
0384.E4	96889	I0142	DUCATO (02-)
1103.E8	90604	0000	DUCATO (94-)
1253.41	85004	B0004	SCUDO (96-)
1253.42	85004	B0004	SCUDO (96-)
1253.42	85006	B0006	SCUDO (96-)
1253.45	85003	B0003	SCUDO (96-)
1253.47	85006	B0006	SCUDO (96-)
1254.69	85004	B0004	SCUDO (96-)
1254.69	85006	B0006	SCUDO (96-)
1254.70	85003	B0003	SCUDO (96-)
1254.71	85004	B0004	SCUDO (96-)
1254.71	85006	B0006	SCUDO (96-)
1300.F7	63572	R0776	DUCATO (81-)
1300.F8	63572	R0776	DUCATO (81-)
1300.G0	63561	R0774	DUCATO (81-)
1300.G0	63561	R0774	TALENTO (89-)
1300.J9	63557	R0354	DUCATO (81-)
1300.J9	63557	R0354	TALENTO (89-)
1300.K1	63561	R0774	DUCATO (81-)
1300.K1	63561	R0774	TALENTO (89-)
1301.N0	61390A	R1294	DUCATO (94-)
1301.N2	61390A	R1294	DUCATO (94-)
1301.N3	61390A	R1294	DUCATO (94-)

CROSS REFERENCE LIST

O.E	Nissens	DRAW.	
(../..) FIAT LIGHT VAN			
1301.NO	61390A	R1294	DUCATO (94-)
1301.P6	61390A	R1294	DUCATO (94-)
1301.Y4	61875A	R1606	SCUDO (96-)
1301.Y7	61875A	R1606	SCUDO (96-)
1305.51	63561	R0774	DUCATO (81-)
1305.51	63561	R0774	TALENTO (89-)
1305199080	85021	B0021	DUCATO (02-)
1305559080	85020	B0020	DUCATO (94-)
1305559080	85020	B0020	DUCATO (02-)
1307012080	96889	I0142	DUCATO (94-)
1307156080	73984	H0228	DUCATO (94-)
1307156080	73987	H0462	DUCATO (94-)
1307390080	61390A	R1294	DUCATO (94-)
1307392080	61862	R1427	DUCATO (94-)
1307394080	61390A	R1294	DUCATO (94-)
1308.J1	85004	B0004	SCUDO (96-)
1308.J1	85006	B0006	SCUDO (96-)
1308.J2	85003	B0003	SCUDO (96-)
1311003080	61390A	R1294	DUCATO (94-)
1311004080	61390A	R1294	DUCATO (94-)
1311521080	61393	R1435	DUCATO (94-)
1312857080	94700	C0700	DUCATO (94-)
1317828080	61390A	R1294	DUCATO (94-)
1321310080	73987	H0462	DUCATO (94-)
1327478080	61390A	R1294	DUCATO (94-)
1327478080	61390A	R1294	DUCATO (02-)
1328088080	85020	B0020	DUCATO (94-)
1328088080	85020	B0020	DUCATO (02-)
1328088080	85021	B0021	DUCATO (02-)
1329225080	61390A	R1294	DUCATO (02-)
1329227080	61390A	R1294	DUCATO (02-)
1330.17	61390A	R1294	DUCATO (94-)
1330.97	61390A	R1294	DUCATO (02-)
1330.98	61390A	R1294	DUCATO (02-)
1331.Q4	61390A	R1294	DUCATO (94-)
1331.QT	63561	R0774	DUCATO (81-)
1331.QT	63561	R0774	TALENTO (89-)
1331.RV	61393	R1435	DUCATO (94-)
1340934080	96889	I0142	DUCATO (94-)
1341514080	61390A	R1294	DUCATO (02-)
1341515080	61390A	R1294	DUCATO (94-)
1341515080	61390A	R1294	DUCATO (02-)
1471087080	85004	B0004	SCUDO (96-)
1471087080	85006	B0006	SCUDO (96-)
1471463080	61396	R1431	SCUDO (96-)
1472059080	96849	I0107	SCUDO (96-)
1474080080	94210	C0192	SCUDO (96-)
1474401080	61875A	R1606	SCUDO (96-)
1474411080	85004	B0004	SCUDO (96-)
1474412080	85004	B0004	SCUDO (96-)
1474412080	85006	B0006	SCUDO (96-)
1474413080	85004	B0004	SCUDO (96-)

O.E	Nissens	DRAW.	
(../..) FIAT LIGHT VAN			
1474413080	85006	B0006	SCUDO (96-)
1474414080	85004	B0004	SCUDO (96-)
1474414080	85006	B0006	SCUDO (96-)
1475445080	85003	B0003	SCUDO (96-)
1475594080	85003	B0003	SCUDO (96-)
1475844080	61875A	R1606	SCUDO (96-)
1475845080	61875A	R1606	SCUDO (96-)
1475974080	85006	B0006	SCUDO (96-)
1476529080	61875A	R1606	SCUDO (96-)
46521840	95170	F0042	DOBLO (01-)
46527180	95170	F0042	DUCATO (94-)
46527180	95170	F0042	DUCATO (02-)
46722710	71443	H0371	DUCATO (94-)
46722710	73987	H0462	DUCATO (94-)
46722710	73986	H0403	DUCATO (02-)
46722928	71451	H0405	DOBLO (01-)
46722950	71451	H0405	DOBLO (01-)
46722960	92206	K0161	DOBLO (01-)
46723042	71451	H0405	DOBLO (01-)
46736891	94632	C0632	DOBLO (01-)
46737731	85127	B0127	DOBLO (01-)
46737732	85128	B0128	DOBLO (01-)
46737733	85126	B0126	DOBLO (01-)
46745058	95323	F0234	DOBLO (01-)
46749000	61769	R1529	DOBLO (01-)
46749003	61768	R1438	DOBLO (01-)
46749005	61767	R2876	DOBLO (01-)
46749018	61766	R3177	DOBLO (01-)
46761800	95170	F0042	DOBLO (01-)
46767294	85129	B0129	DOBLO (01-)
46770820	92206	K0161	DOBLO (01-)
46777298	85433	B0433	FIORINO (04-)
46779532	96736	I0320	DOBLO (01-)
46786099	85133	B0133	DOBLO (01-)
46803031	61768	R1438	DOBLO (01-)
46803033	94631	C0631	DOBLO (01-)
46803035	61766	R3177	DOBLO (01-)
46803039	61767	R2876	DOBLO (01-)
46807378	61765	R3242	DOBLO (01-)
46820833	94727	C0727	DOBLO (01-)
46821270	94633	C0633	DOBLO (01-)
46849068	96736	I0320	DOBLO (01-)
50010242	61873	R1244	FIORINO (88-)
51718487	85131	B0131	DOBLO (01-)
51718489	85130	B0130	DOBLO (01-)
51718953	96736	I0320	DOBLO (01-)
51738718	85128	B0128	DOBLO (01-)
51738720	85129	B0129	DOBLO (01-)
51738798	85133	B0133	DOBLO (01-)
51738799	85131	B0131	DOBLO (01-)
51746102	85433	B0433	FIORINO (04-)
51753828	85130	B0130	DOBLO (01-)

CROSS REFERENCE LIST

O.E	Nissens	DRAW.	
(../..) FIAT LIGHT VAN			
576670200	95170	F0042	DUCATO (94-)
576670200	95170	F0042	DUCATO (02-)
5929122	72980	H0043	DUCATO (81-)
5947797	71148	H0146	DUCATO (81-)
5969172	63572	R0776	DUCATO (81-)
5969174	63561	R0774	DUCATO (81-)
5969174	63561	R0774	TALENTO (89-)
5975062	61880	R0068	FIORINO (79-)
5981189	63558	R0359	DUCATO (81-)
5981189	63569	R0775	DUCATO (81-)
6448.46	72980	H0043	DUCATO (81-)
6448.48	71148	H0146	DUCATO (81-)
6448.62	73988	H0413	DUCATO (81-)
6448.93	73984	H0228	DUCATO (94-)
6448.93	73987	H0462	DUCATO (94-)
6448.F9	73984	H0228	DUCATO (94-)
6448.F9	73987	H0462	DUCATO (94-)
6448.H8	73986	H0403	DUCATO (94-)
6448.H8	73987	H0462	DUCATO (94-)
6455.Q6	94210	C0192	SCUDO (96-)
6455.Q7	95010	F0039	SCUDO (96-)
71735356	61873	R1244	FIORINO (88-)
7500726	61860	R0066	FIORINO (79-)
7503277	61670	R0082	FIORINO (79-)
7586746	61848	R0463	FIORINO (88-)
7619387	71144	H0123	DUCATO (81-)
7652127	61853	R1309	FIORINO (88-)
7661840	73988	H0413	DUCATO (81-)
7685063	61852	R1310	FIORINO (88-)
7693062	61931	R0348	FIORINO (88-)
7742746	95170	F0042	DUCATO (94-)
7742746	95170	F0042	DUCATO (02-)
7742746	95170	F0042	FIORINO (04-)
7754055	71429	H0098	FIORINO (88-)
9566944680	71149	H0254	SCUDO (96-)
9566945280	92170	K0143	SCUDO (96-)
9617682080	95010	F0039	SCUDO (96-)
ZF05969174	63561	R0774	TALENTO (89-)
ZF07555802	63561	R0774	TALENTO (89-)
FORD LIGHT VAN			
1002142	95353	F0264	TRANSIT (94-)
1013004	85425	B0425	TRANSIT (94-)
1023920	62080A	R2182	TRANSIT (94-)
1030491	62049	R2732	TRANSIT (94-)
1040077	62177A	R1099	TRANSIT (92-)
1041092	71761	H0162	SIERRA PICKUP (87-)
1041092	71762	H0191	SIERRA PICKUP (87-)
1055288	94483	C0489	TRANSIT (94-)
1062254	71747	H0278	TRANSIT CONNECT (02-)
1062481	92193	K0181	TRANSIT CONNECT (02-)
1068129	92193	K0181	TRANSIT CONNECT (02-)

O.E	Nissens	DRAW.	
(../..) FORD LIGHT VAN			
1068915	62177A	R1099	TRANSIT (92-)
1092721	71740	H0276	TRANSIT (94-)
1102063	85425	B0425	TRANSIT (94-)
1103120	62043A	R2383	TRANSIT (00-)
1104319	62044A	R2381	TRANSIT (00-)
1104320	62043A	R2383	TRANSIT (00-)
1108118	92193	K0181	TRANSIT CONNECT (02-)
1112702	62048	R2733	TRANSIT (94-)
1112703	62057A	R2215	TRANSIT (94-)
1112704	62058A	R2216	TRANSIT (94-)
1113204	62043A	R2383	TRANSIT (00-)
1113206	62043A	R2383	TRANSIT (00-)
1113755	71740	H0276	TRANSIT (94-)
1120156	94483	C0489	TRANSIT (94-)
1122802	92193	K0181	TRANSIT CONNECT (02-)
1158001	85425	B0425	TRANSIT (94-)
1211260	94483	C0489	TRANSIT (94-)
1318991	92194	K0195	TRANSIT (00-)
1575611	62340	R0123	TRANSIT (78-)
1590322	62340	R0123	TRANSIT (78-)
1590323	62340	R0123	TRANSIT (78-)
1641901	62367A	R0748	TRANSIT (86-)
1652501	62178	R1168	SIERRA PICKUP (87-)
1659344	62208	R1367	SIERRA PICKUP (87-)
1659346	62208	R1367	SIERRA PICKUP (87-)
1953239	62069A	R2819	MAVERICK (93-)
1953240	62070A	R2731	MAVERICK (93-)
1956440	94501	C0506	MAVERICK (96-)
1956603	72050	H0271	MAVERICK (93-)
1956603	72050	H0271	MAVERICK (96-)
1958244	72050	H0271	MAVERICK (93-)
1958244	72050	H0271	MAVERICK (96-)
1958982	68708A	R3140	MAVERICK (96-)
1961138	72050	H0271	MAVERICK (93-)
1961138	72050	H0271	MAVERICK (96-)
1961970	94501	C0506	MAVERICK (96-)
1C15 8C607 CD	85426	B0426	TRANSIT (00-)
1C15 8C607 CE	85426	B0426	TRANSIT (00-)
1C15 8C607 CF	85426	B0426	TRANSIT (00-)
1C159L440BA	96733	I0321	TRANSIT (00-)
1C159L440BB	96733	I0321	TRANSIT (00-)
1C159L440BD	96733	I0321	TRANSIT (00-)
1C159L440BE	96732	I0322	TRANSIT (00-)
1C159L440BE	96733	I0321	TRANSIT (00-)
1C1H8005FD	62046A	R2384	TRANSIT (00-)
1C1H8005JA	62046A	R2384	TRANSIT (00-)
1C1H8005JB	62046A	R2384	TRANSIT (00-)
27280-OF000	92084	K0074	MAVERICK (93-)
2T148005AD	62156A	R0094	TRANSIT CONNECT (02-)
2T148C607AD	85261	B0261	TRANSIT CONNECT (02-)
2T148C607BC	85262	B0262	TRANSIT CONNECT (02-)
2T148C607BD	85262	B0262	TRANSIT CONNECT (02-)

CROSS REFERENCE LIST

(../..) FORD LIGHT VAN

O.E	Nissens	DRAW.	
2T148C607EC	85263	B0263	TRANSIT CONNECT (02-)
2T148C607GA	85264	B0264	TRANSIT CONNECT (02-)
2T1H 19710 AB	94664	C0664	TRANSIT CONNECT (02-)
2T1H 19710 AC	94664	C0664	TRANSIT CONNECT (02-)
2T1H19E647AE	95331	F0272	TRANSIT CONNECT (02-)
2T1H19E647AF	95331	F0272	TRANSIT CONNECT (02-)
2T1Q9L440AB	92193	K0181	TRANSIT CONNECT (02-)
2T1Q9L440AC	92193	K0181	TRANSIT CONNECT (02-)
3313267	620671	R2464	EXPLORER (91-)
3313267	62067A	R2464	EXPLORER (91-)
3500417	71766	H0388	EXPLORER (91-)
3513277	94472	C0478	EXPLORER (91-)
3554378	94472	C0478	EXPLORER (91-)
3599738	62246	R3094	RANGER (98-)
3599738	62246A	R3094	RANGER (98-)
3787236	62060	R3171	EXPLORER (91-)
3858115	94473	C0479	EXPLORER (91-)
3892693	94472	C0478	EXPLORER (91-)
3893717	62061	R3243	EXPLORER (91-)
3893906	620671	R2464	EXPLORER (91-)
3893906	62067A	R2464	EXPLORER (91-)
3898970	62061	R3243	EXPLORER (91-)
3902672	62061	R3243	EXPLORER (91-)
3945319	71766	H0388	RANGER (98-)
3955151	62060	R3171	EXPLORER (91-)
3965171	62060	R3171	EXPLORER (91-)
3C1H 19E647 AA	95329	F0263	TRANSIT (00-)
4039231	62060	R3171	EXPLORER (91-)
4039416	620671	R2464	EXPLORER (91-)
4039416	62067A	R2464	EXPLORER (91-)
4039418	62061	R3243	EXPLORER (91-)
4041973	94577	C0577	TRANSIT (00-)
4041976	92194	K0195	TRANSIT (00-)
4042309	96732	I0322	TRANSIT (00-)
4042676	95329	F0263	TRANSIT (00-)
4048124	62060	R3171	EXPLORER (91-)
4053339	95329	F0263	TRANSIT (00-)
4056285	62246	R3094	RANGER (98-)
4056285	62246A	R3094	RANGER (98-)
4067926	62246	R3094	RANGER (98-)
4067926	62246A	R3094	RANGER (98-)
4070925	62046A	R2384	TRANSIT (00-)
4084418	62046A	R2384	TRANSIT (00-)
4095715	71767	H0389	MAVERICK (02-)
4095948	94731	C0731	MAVERICK (02-)
4097906	94731	C0731	MAVERICK (02-)
4098943	62003	R3096	MAVERICK (02-)
4099149	92194	K0195	TRANSIT (00-)
4104714	62046A	R2384	TRANSIT (00-)
4104949	85426	B0426	TRANSIT (00-)
4106727	62003	R3096	MAVERICK (02-)
4108890	62246	R3094	RANGER (98-)

(../..) FORD LIGHT VAN

O.E	Nissens	DRAW.	
4108890	62246A	R3094	RANGER (98-)
4119403	85426	B0426	TRANSIT (00-)
4119589	62004	R3097	MAVERICK (02-)
4126928	96733	I0321	TRANSIT (00-)
4156969	62046A	R2384	TRANSIT (00-)
4189069	96732	I0322	TRANSIT (00-)
4189069	96733	I0321	TRANSIT (00-)
4323785	62044A	R2381	TRANSIT (00-)
4331444	62046A	R2384	TRANSIT (00-)
4367057	94664	C0664	TRANSIT CONNECT (02-)
4367070	95331	F0272	TRANSIT CONNECT (02-)
4367089	62156A	R0094	TRANSIT CONNECT (02-)
4367092	62021A	R3011	TRANSIT CONNECT (02-)
4371780	85261	B0261	TRANSIT CONNECT (02-)
4371783	85262	B0262	TRANSIT CONNECT (02-)
4371786	85263	B0263	TRANSIT CONNECT (02-)
4391617	85262	B0262	TRANSIT CONNECT (02-)
4391619	85263	B0263	TRANSIT CONNECT (02-)
4397252	96732	I0322	TRANSIT (00-)
4397252	96733	I0321	TRANSIT (00-)
4471423	94577	C0577	TRANSIT (00-)
4484464	62044A	R2381	TRANSIT (00-)
4488406	94664	C0664	TRANSIT CONNECT (02-)
4493553	62046A	R2384	TRANSIT (00-)
4500864	95331	F0272	TRANSIT CONNECT (02-)
4510765	95329	F0263	TRANSIT (00-)
4521760	85262	B0262	TRANSIT CONNECT (02-)
4522847	96732	I0322	TRANSIT (00-)
4522847	96733	I0321	TRANSIT (00-)
4523720	62015A	R3010	TRANSIT CONNECT (02-)
4523721	85261	B0261	TRANSIT CONNECT (02-)
4523721	85264	B0264	TRANSIT CONNECT (02-)
4540014	85264	B0264	TRANSIT CONNECT (02-)
4540015	85262	B0262	TRANSIT CONNECT (02-)
4541592	85426	B0426	TRANSIT (00-)
4565285	62246	R3094	RANGER (98-)
4565285	62246A	R3094	RANGER (98-)
4571640	62015A	R3010	TRANSIT CONNECT (02-)
4596701	62044A	R2381	TRANSIT (00-)
4596740	62046A	R2384	TRANSIT (00-)
6041022	62340	R0123	TRANSIT (78-)
6065788	62340	R0123	TRANSIT (78-)
6103493	62370	R0124	TRANSIT (78-)
6124011	62371	R0125	TRANSIT (78-)
6124012	62371	R0125	TRANSIT (78-)
6124014	62371	R0125	TRANSIT (78-)
6160271	62369A	R0989	TRANSIT (86-)
6160272	62367A	R0748	TRANSIT (86-)
6160274	62369A	R0989	TRANSIT (86-)
6176831	62366A	R1399	TRANSIT (86-)
6640239	62177A	R1099	TRANSIT (92-)
6640240	62177A	R1099	TRANSIT (92-)

CROSS REFERENCE LIST

(../..) FORD LIGHT VAN

O.E	Nissens	DRAW.	
6640241	62177A	R1099	TRANSIT (92-)
6640242	62177A	R1099	TRANSIT (92-)
6912241	62249A	R1233	TRANSIT (92-)
7045704	85488	B0488	TRANSIT (94-)
7045709	62049	R2732	TRANSIT (94-)
7045710	62048	R2733	TRANSIT (94-)
7045711	62057A	R2215	TRANSIT (94-)
7045712	62243	R3102	TRANSIT (94-)
7045713	62058A	R2216	TRANSIT (94-)
7045714	62081A	R2184	TRANSIT (94-)
7045715	62241A	R1948	TRANSIT (94-)
7110379	71740	H0276	TRANSIT (94-)
7138207	62177A	R1099	TRANSIT (92-)
7140980	85425	B0425	TRANSIT (94-)
7140985	85425	B0425	TRANSIT (94-)
71VB8005AE	62340	R0123	TRANSIT (78-)
7233398	85488	B0488	TRANSIT (94-)
7242483	62049	R2732	TRANSIT (94-)
7242484	62243	R3102	TRANSIT (94-)
7242485	62081A	R2184	TRANSIT (94-)
7242486	62241A	R1948	TRANSIT (94-)
7332457	95353	F0264	TRANSIT (94-)
73VBK328 BA	71759	H0080	TRANSIT (78-)
78VB8005LA	62340	R0123	TRANSIT (78-)
79VB8005AA	62340	R0123	TRANSIT (78-)
81VB8005CA	62370	R0124	TRANSIT (78-)
84VB8005EB	62371	R0125	TRANSIT (78-)
84VB8005HB	62371	R0125	TRANSIT (78-)
85GG18B539CD	71761	H0162	SIERRA PICKUP (87-)
85GG18B539CD	71762	H0191	SIERRA PICKUP (87-)
86VB8005BB	62369A	R0989	TRANSIT (86-)
86VB8005BC	62369A	R0989	TRANSIT (86-)
86VB8005CB	62367A	R0748	TRANSIT (86-)
86VB8005EB	62369A	R0989	TRANSIT (86-)
86VB8005AA	62366A	R1399	TRANSIT (86-)
87BB8005GB	62178	R1168	SIERRA PICKUP (87-)
88BB8005RA	62208	R1367	SIERRA PICKUP (87-)
88VB8005AA	62366A	R1399	TRANSIT (86-)
88VW18539AB	71758	H0268	TRANSIT (92-)
89VW18476BA	71757	H0267	TRANSIT (86-)
92VB8005BC	62177A	R1099	TRANSIT (92-)
92VB8005BD	62177A	R1099	TRANSIT (92-)
92VB8005BE	62177A	R1099	TRANSIT (92-)
92VB8005CD	62249A	R1233	TRANSIT (92-)
92VB8005EC	62177A	R1099	TRANSIT (92-)
92VB8005FC	62177A	R1099	TRANSIT (92-)
92VB8005HA	62241A	R1948	TRANSIT (94-)
94VB 8005 EC	62243	R3102	TRANSIT (94-)
94VB 8146 AC	85488	B0488	TRANSIT (94-)
94VB 8C607 CD	85425	B0425	TRANSIT (94-)
94VB 8C607 CE	85425	B0425	TRANSIT (94-)
94VB 8C607 CF	85425	B0425	TRANSIT (94-)

(../..) FORD LIGHT VAN

O.E	Nissens	DRAW.	
94VB 8C607 CG	85425	B0425	TRANSIT (94-)
94VB8005 EB	62243	R3102	TRANSIT (94-)
94VB8005AC	62049	R2732	TRANSIT (94-)
94VB8005BB	62048	R2733	TRANSIT (94-)
94VB8005BC	62048	R2733	TRANSIT (94-)
94VB8005DB	62057A	R2215	TRANSIT (94-)
94VB8005DC	62057A	R2215	TRANSIT (94-)
94VB8005FB	62058A	R2216	TRANSIT (94-)
94VB8005GC	62081A	R2184	TRANSIT (94-)
94VB8005HB	62241A	R1948	TRANSIT (94-)
95VW 19C808 AC	95353	F0264	TRANSIT (94-)
95VW 19E647 AC	95353	F0264	TRANSIT (94-)
95VW18476AB	71740	H0276	TRANSIT (94-)
95VW18476AC	71740	H0276	TRANSIT (94-)
95VW18476AE	71740	H0276	TRANSIT (94-)
95VW18476BC	71741	H0323	TRANSIT (94-)
95VW18476BD	71741	H0323	TRANSIT (94-)
95VW18476BE	71741	H0323	TRANSIT (94-)
97VB8005AD	62080A	R2182	TRANSIT (94-)
98VW19710BA	94483	C0489	TRANSIT (94-)
AJ05-15-025F	85278	B0278	MAVERICK (02-)
AJ06-15-025	85278	B0278	MAVERICK (02-)
AJ07-15-025	85278	B0278	MAVERICK (02-)
E3TH8005KA	62071	R2082	F-SERIE (83-)
E3TH8005KA	62071	R2082	PICKUP F-SER (85-)
E3TH8005KB	62071	R2082	PICKUP F-SER (85-)
E3TH8005LA	62071	R2082	PICKUP F-SER (85-)
E3TH8005LB	62071	R2082	PICKUP F-SER (85-)
E3TH8005LC	62071	R2082	PICKUP F-SER (85-)
E5TH8005ABA	62098	R1503	PICKUP F-SER (85-)
E5TH8005ABA	620981	R1503	PICKUP F-SER (85-)
E5TH8005BA	62098	R1503	PICKUP F-SER (85-)
E5TH8005BA	620981	R1503	PICKUP F-SER (85-)
E5TH8005DA	62098	R1503	PICKUP F-SER (85-)
E5TH8005DA	620981	R1503	PICKUP F-SER (85-)
E5TH8005AA	62098	R1503	PICKUP F-SER (85-)
E5TH8005AA	620981	R1503	PICKUP F-SER (85-)
E5TZ8005G	62098	R1503	PICKUP F-SER (85-)
E5TZ8005G	620981	R1503	PICKUP F-SER (85-)
E9TH8005DA	62098	R1503	PICKUP F-SER (85-)
E9TH8005DA	620981	R1503	PICKUP F-SER (85-)
E9TH8005EA	62098	R1503	PICKUP F-SER (85-)
E9TH8005EA	620981	R1503	PICKUP F-SER (85-)
E9TZ8005H	62098	R1503	PICKUP F-SER (85-)
E9TZ8005H	620981	R1503	PICKUP F-SER (85-)
E9TZ8005J	62098	R1503	PICKUP F-SER (85-)
E9TZ8005J	620981	R1503	PICKUP F-SER (85-)
EC-0161-A08	71767	H0389	MAVERICK (02-)
EC161480A	94731	C0731	MAVERICK (02-)
F17H8005CA	620671	R2464	EXPLORER (91-)
F17H8005CA	62067A	R2464	EXPLORER (91-)
F1TZ8005B	620671	R2464	EXPLORER (91-)

CROSS REFERENCE LIST

O.E	Nissens	DRAW.	
(../..) FORD LIGHT VAN			
F1TZ8005B	62067A	R2464	EXPLORER (91-)
F2TH8005LA	62103	R1504	PICKUP F-SER (85-)
F47H19710AA	94472	C0478	EXPLORER (91-)
F47H8005BA	620671	R2464	EXPLORER (91-)
F47H8005BA	62067A	R2464	EXPLORER (91-)
F47H8N150AA	620671	R2464	EXPLORER (91-)
F47H8N150AA	62067A	R2464	EXPLORER (91-)
F47Z8005B	620671	R2464	EXPLORER (91-)
F47Z8005B	62067A	R2464	EXPLORER (91-)
F57H8005NB	62061	R3243	EXPLORER (91-)
F5TZ19712A	94473	C0479	EXPLORER (91-)
F65Z19712AB	94474	C0480	PICKUP F-SER (85-)
F67H19710BA	94473	C0479	EXPLORER (91-)
F67H8N150AA	62061	R3243	EXPLORER (91-)
F6TZ19712BA	94474	C0480	PICKUP F-SER (85-)
F77Z8005BB	62060	R3171	EXPLORER (91-)
F87Z8005KA	62060	R3171	EXPLORER (91-)
XF2Z19712AA	94469	C0475	WINDSTAR (94-)
XL2H8005DA	62060	R3171	EXPLORER (91-)
XM34 19860 BA	71766	H0388	RANGER (98-)
XM34 8005 EA	62246	R3094	RANGER (98-)
XM34 8005 EA	62246A	R3094	RANGER (98-)
XS4H 18476 AB	71747	H0278	TRANSIT CONNECT (02-)
YC159L440BA	96732	I0322	TRANSIT (00-)
YC159L440BD	96732	I0322	TRANSIT (00-)
YC159L440CA	96732	I0322	TRANSIT (00-)
YC1H 19E647 BA	95329	F0263	TRANSIT (00-)
YC1H 19E647 BB	95329	F0263	TRANSIT (00-)
YC1H18B539BA	71769	H0128	TRANSIT (00-)
YC1H18B539BB	71769	H0128	TRANSIT (00-)
YC1H18B539AA	71768	H0127	TRANSIT (00-)
YC1H19710BA	94577	C0577	TRANSIT (00-)
YC1H19710BB	94577	C0577	TRANSIT (00-)
YC1H19850AB	92194	K0195	TRANSIT (00-)
YC1H19850AC	92194	K0195	TRANSIT (00-)
YC1H19850AD	92194	K0195	TRANSIT (00-)
YC1H19850BC	92194	K0195	TRANSIT (00-)
YC1H8005BD	62044A	R2381	TRANSIT (00-)
YC1H8005CD	62043A	R2383	TRANSIT (00-)
YC1H8005CE	62043A	R2383	TRANSIT (00-)
YC1H8005DC	62043A	R2383	TRANSIT (00-)
YC1H8005DD	62043A	R2383	TRANSIT (00-)
YF10-15-025H	85277	B0277	MAVERICK (02-)
YF10-15-025J	85277	B0277	MAVERICK (02-)
YF10-15-025K	85277	B0277	MAVERICK (02-)
YL8418476AA	71767	H0389	MAVERICK (02-)
YL84-8C607-EL	85277	B0277	MAVERICK (02-)
YL84-8C607-GH	85278	B0278	MAVERICK (02-)
YL8H8005KA	62004	R3097	MAVERICK (02-)
YL8H8005KB	62004	R3097	MAVERICK (02-)
YL8H8005LA	62003	R3096	MAVERICK (02-)
YL8H8005LB	62003	R3096	MAVERICK (02-)

O.E	Nissens	DRAW.	
(../..) FORD LIGHT VAN			
YL8H8005LC	62003	R3096	MAVERICK (02-)
YS4H19850BA	92193	K0181	TRANSIT CONNECT (02-)
YS4H19850CA	92193	K0181	TRANSIT CONNECT (02-)
YS4H19850AA	92193	K0181	TRANSIT CONNECT (02-)
FORD USA LIGHT VAN			
52TH8005ZA	62038	R3178	BRONCO (85-)
52TH8005ZA	62098	R1503	BRONCO (85-)
52TH8005ZA	620981	R1503	BRONCO (85-)
52TH8005ZA	62038	R3178	BRONCO (92-)
52TH8005ZA	62098	R1503	BRONCO (92-)
52TH8005ZA	620981	R1503	BRONCO (92-)
52TH8005ZA	62038	R3178	F150 (92-)
52TH8005ZA	62098	R1503	F150 (92-)
52TH8005ZA	620981	R1503	F150 (92-)
52TH8005ZA	62038	R3178	F250 (92-)
52TH8005ZA	62098	R1503	F250 (92-)
52TH8005ZA	620981	R1503	F250 (92-)
52TH8005ZA	62038	R3178	F350 (92-)
52TH8005ZA	62098	R1503	F350 (92-)
52TH8005ZA	620981	R1503	F350 (92-)
52TH8005ZA	62038	R3178	F450 (92-)
52TH8005ZA	62098	R1503	F450 (92-)
52TH8005ZA	620981	R1503	F450 (92-)
52TH8005ZA	62038	R3178	RANGER (85-)
52TH8005ZA	62098	R1503	RANGER (85-)
52TH8005ZA	620981	R1503	RANGER (85-)
E59H8005BA	62109	R1269	AEROSTAR (85-)
E59H8005EA	62109	R1269	AEROSTAR (85-)
E59H8005FA	62109	R1269	AEROSTAR (85-)
E59H8005AA	62109	R1269	AEROSTAR (85-)
E5TH8005ABA	62038	R3178	BRONCO (85-)
E5TH8005ABA	62098	R1503	BRONCO (85-)
E5TH8005ABA	620981	R1503	BRONCO (85-)
E5TH8005ABA	62038	R3178	BRONCO (92-)
E5TH8005ABA	62098	R1503	BRONCO (92-)
E5TH8005ABA	620981	R1503	BRONCO (92-)
E5TH8005ABA	62038	R3178	F150 (92-)
E5TH8005ABA	62098	R1503	F150 (92-)
E5TH8005ABA	620981	R1503	F150 (92-)
E5TH8005ABA	62038	R3178	F250 (92-)
E5TH8005ABA	62098	R1503	F250 (92-)
E5TH8005ABA	620981	R1503	F250 (92-)
E5TH8005ABA	62038	R3178	F350 (92-)
E5TH8005ABA	62098	R1503	F350 (92-)
E5TH8005ABA	620981	R1503	F350 (92-)
E5TH8005ABA	62038	R3178	F450 (92-)
E5TH8005ABA	62098	R1503	F450 (92-)
E5TH8005ABA	620981	R1503	F450 (92-)
E5TH8005ABA	62038	R3178	RANGER (85-)
E5TH8005ABA	62098	R1503	RANGER (85-)
E5TH8005ABA	620981	R1503	RANGER (85-)

CROSS REFERENCE LIST

O.E	Nissens	DRAW.	
(../..) FORD USA LIGHT VAN			
E5TH8005BA	62038	R3178	BRONCO (85-)
E5TH8005BA	62098	R1503	BRONCO (85-)
E5TH8005BA	620981	R1503	BRONCO (85-)
E5TH8005BA	62038	R3178	BRONCO (92-)
E5TH8005BA	62098	R1503	BRONCO (92-)
E5TH8005BA	620981	R1503	BRONCO (92-)
E5TH8005BA	62038	R3178	F150 (92-)
E5TH8005BA	62098	R1503	F150 (92-)
E5TH8005BA	620981	R1503	F150 (92-)
E5TH8005BA	62038	R3178	F250 (92-)
E5TH8005BA	62098	R1503	F250 (92-)
E5TH8005BA	620981	R1503	F250 (92-)
E5TH8005BA	62038	R3178	F350 (92-)
E5TH8005BA	62098	R1503	F350 (92-)
E5TH8005BA	620981	R1503	F350 (92-)
E5TH8005BA	62038	R3178	F450 (92-)
E5TH8005BA	62098	R1503	F450 (92-)
E5TH8005BA	620981	R1503	F450 (92-)
E5TH8005BA	62038	R3178	RANGER (85-)
E5TH8005BA	62098	R1503	RANGER (85-)
E5TH8005BA	620981	R1503	RANGER (85-)
E5TH8005CA	62038	R3178	BRONCO (85-)
E5TH8005CA	62098	R1503	BRONCO (85-)
E5TH8005CA	620981	R1503	BRONCO (85-)
E5TH8005CA	62038	R3178	BRONCO (92-)
E5TH8005CA	62098	R1503	BRONCO (92-)
E5TH8005CA	620981	R1503	BRONCO (92-)
E5TH8005CA	62038	R3178	F150 (92-)
E5TH8005CA	62098	R1503	F150 (92-)
E5TH8005CA	620981	R1503	F150 (92-)
E5TH8005CA	62038	R3178	F250 (92-)
E5TH8005CA	62098	R1503	F250 (92-)
E5TH8005CA	620981	R1503	F250 (92-)
E5TH8005CA	62038	R3178	F350 (92-)
E5TH8005CA	62098	R1503	F350 (92-)
E5TH8005CA	620981	R1503	F350 (92-)
E5TH8005CA	62038	R3178	F450 (92-)
E5TH8005CA	62098	R1503	F450 (92-)
E5TH8005CA	620981	R1503	F450 (92-)
E5TH8005CA	62038	R3178	RANGER (85-)
E5TH8005CA	62098	R1503	RANGER (85-)
E5TH8005CA	620981	R1503	RANGER (85-)
E5TH8005DA	62038	R3178	BRONCO (85-)
E5TH8005DA	62098	R1503	BRONCO (85-)
E5TH8005DA	620981	R1503	BRONCO (85-)
E5TH8005DA	62038	R3178	BRONCO (92-)
E5TH8005DA	62098	R1503	BRONCO (92-)
E5TH8005DA	620981	R1503	BRONCO (92-)
E5TH8005DA	62038	R3178	F150 (92-)
E5TH8005DA	62098	R1503	F150 (92-)
E5TH8005DA	620981	R1503	F150 (92-)
E5TH8005DA	62038	R3178	F250 (92-)

O.E	Nissens	DRAW.	
(../..) FORD USA LIGHT VAN			
E5TH8005DA	62098	R1503	F250 (92-)
E5TH8005DA	620981	R1503	F250 (92-)
E5TH8005DA	62038	R3178	F350 (92-)
E5TH8005DA	62098	R1503	F350 (92-)
E5TH8005DA	620981	R1503	F350 (92-)
E5TH8005DA	62038	R3178	F450 (92-)
E5TH8005DA	62098	R1503	F450 (92-)
E5TH8005DA	620981	R1503	F450 (92-)
E5TH8005DA	62038	R3178	RANGER (85-)
E5TH8005DA	62098	R1503	RANGER (85-)
E5TH8005DA	620981	R1503	RANGER (85-)
E5TH8005G	62038	R3178	BRONCO (85-)
E5TH8005G	62098	R1503	BRONCO (85-)
E5TH8005G	620981	R1503	BRONCO (85-)
E5TH8005G	62038	R3178	BRONCO (92-)
E5TH8005G	62098	R1503	BRONCO (92-)
E5TH8005G	620981	R1503	BRONCO (92-)
E5TH8005G	62038	R3178	F150 (92-)
E5TH8005G	62098	R1503	F150 (92-)
E5TH8005G	620981	R1503	F150 (92-)
E5TH8005G	62038	R3178	F250 (92-)
E5TH8005G	62098	R1503	F250 (92-)
E5TH8005G	620981	R1503	F250 (92-)
E5TH8005G	62038	R3178	F350 (92-)
E5TH8005G	62098	R1503	F350 (92-)
E5TH8005G	620981	R1503	F350 (92-)
E5TH8005G	62038	R3178	F450 (92-)
E5TH8005G	62098	R1503	F450 (92-)
E5TH8005G	620981	R1503	F450 (92-)
E5TH8005G	62038	R3178	RANGER (85-)
E5TH8005G	62098	R1503	RANGER (85-)
E5TH8005G	620981	R1503	RANGER (85-)
E5TH8005AA	62038	R3178	BRONCO (85-)
E5TH8005AA	62098	R1503	BRONCO (85-)
E5TH8005AA	620981	R1503	BRONCO (85-)
E5TH8005AA	62038	R3178	BRONCO (92-)
E5TH8005AA	62098	R1503	BRONCO (92-)
E5TH8005AA	620981	R1503	BRONCO (92-)
E5TH8005AA	62038	R3178	F150 (92-)
E5TH8005AA	62098	R1503	F150 (92-)
E5TH8005AA	620981	R1503	F150 (92-)
E5TH8005AA	62038	R3178	F250 (92-)
E5TH8005AA	62098	R1503	F250 (92-)
E5TH8005AA	620981	R1503	F250 (92-)
E5TH8005AA	62038	R3178	F350 (92-)
E5TH8005AA	62098	R1503	F350 (92-)
E5TH8005AA	620981	R1503	F350 (92-)
E5TH8005AA	62038	R3178	F450 (92-)
E5TH8005AA	62098	R1503	F450 (92-)
E5TH8005AA	620981	R1503	F450 (92-)
E5TH8005AA	62038	R3178	RANGER (85-)
E5TH8005AA	62098	R1503	RANGER (85-)

CROSS REFERENCE LIST

O.E	Nissens	DRAW.	
(../..) FORD USA LIGHT VAN			
E5TH8005AA	620981	R1503	RANGER (85-)
E5TH8005AAB	62038	R3178	BRONCO (85-)
E5TH8005AAB	62098	R1503	BRONCO (85-)
E5TH8005AAB	620981	R1503	BRONCO (85-)
E5TH8005AAB	62038	R3178	BRONCO (92-)
E5TH8005AAB	62098	R1503	BRONCO (92-)
E5TH8005AAB	620981	R1503	BRONCO (92-)
E5TH8005AAB	62038	R3178	F150 (92-)
E5TH8005AAB	62098	R1503	F150 (92-)
E5TH8005AAB	620981	R1503	F150 (92-)
E5TH8005AAB	62038	R3178	F250 (92-)
E5TH8005AAB	62098	R1503	F250 (92-)
E5TH8005AAB	620981	R1503	F250 (92-)
E5TH8005AAB	62038	R3178	F350 (92-)
E5TH8005AAB	62098	R1503	F350 (92-)
E5TH8005AAB	620981	R1503	F350 (92-)
E5TH8005AAB	62038	R3178	F450 (92-)
E5TH8005AAB	62098	R1503	F450 (92-)
E5TH8005AAB	620981	R1503	F450 (92-)
E5TH8005AAB	62038	R3178	RANGER (85-)
E5TH8005AAB	62098	R1503	RANGER (85-)
E5TH8005AAB	620981	R1503	RANGER (85-)
E5TZ8005G	62038	R3178	BRONCO (85-)
E5TZ8005G	62098	R1503	BRONCO (85-)
E5TZ8005G	620981	R1503	BRONCO (85-)
E5TZ8005G	62038	R3178	BRONCO (92-)
E5TZ8005G	62098	R1503	BRONCO (92-)
E5TZ8005G	620981	R1503	BRONCO (92-)
E5TZ8005G	62038	R3178	F150 (92-)
E5TZ8005G	62098	R1503	F150 (92-)
E5TZ8005G	620981	R1503	F150 (92-)
E5TZ8005G	62038	R3178	F250 (92-)
E5TZ8005G	62098	R1503	F250 (92-)
E5TZ8005G	620981	R1503	F250 (92-)
E5TZ8005G	62038	R3178	F350 (92-)
E5TZ8005G	62098	R1503	F350 (92-)
E5TZ8005G	620981	R1503	F350 (92-)
E5TZ8005G	62038	R3178	F450 (92-)
E5TZ8005G	62098	R1503	F450 (92-)
E5TZ8005G	620981	R1503	F450 (92-)
E5TZ8005G	62038	R3178	RANGER (85-)
E5TZ8005G	62098	R1503	RANGER (85-)
E5TZ8005G	620981	R1503	RANGER (85-)
E69Z 19712 B	94470	C0476	AEROSTAR (85-)
E69Z8005D	62109	R1269	AEROSTAR (85-)
E69Z8005E	62109	R1269	AEROSTAR (85-)
E69Z8005F	62109	R1269	AEROSTAR (85-)
E79H8005CA	62109	R1269	AEROSTAR (85-)
E79H8005AA	62109	R1269	AEROSTAR (85-)
E7TZ8005D	62096	R1508	BRONCO (85-)
E7TZ8005D	62096	R1508	RANGER (85-)
E89H8005CA	62109	R1269	AEROSTAR (85-)

O.E	Nissens	DRAW.	
(../..) FORD USA LIGHT VAN			
E89H8005AA	62109	R1269	AEROSTAR (85-)
E89Z8005A	62109	R1269	AEROSTAR (85-)
E9TH8005DA	62038	R3178	BRONCO (85-)
E9TH8005DA	62098	R1503	BRONCO (85-)
E9TH8005DA	620981	R1503	BRONCO (85-)
E9TH8005DA	62038	R3178	BRONCO (92-)
E9TH8005DA	62098	R1503	BRONCO (92-)
E9TH8005DA	620981	R1503	BRONCO (92-)
E9TH8005DA	62038	R3178	F150 (92-)
E9TH8005DA	62098	R1503	F150 (92-)
E9TH8005DA	620981	R1503	F150 (92-)
E9TH8005DA	62038	R3178	F250 (92-)
E9TH8005DA	62098	R1503	F250 (92-)
E9TH8005DA	620981	R1503	F250 (92-)
E9TH8005DA	62038	R3178	F350 (92-)
E9TH8005DA	62098	R1503	F350 (92-)
E9TH8005DA	620981	R1503	F350 (92-)
E9TH8005DA	62038	R3178	F450 (92-)
E9TH8005DA	62098	R1503	F450 (92-)
E9TH8005DA	620981	R1503	F450 (92-)
E9TH8005DA	62038	R3178	RANGER (85-)
E9TH8005DA	62098	R1503	RANGER (85-)
E9TH8005DA	620981	R1503	RANGER (85-)
E9TH8005EA	62038	R3178	BRONCO (85-)
E9TH8005EA	62098	R1503	BRONCO (85-)
E9TH8005EA	620981	R1503	BRONCO (85-)
E9TH8005EA	62038	R3178	BRONCO (92-)
E9TH8005EA	62098	R1503	BRONCO (92-)
E9TH8005EA	620981	R1503	BRONCO (92-)
E9TH8005EA	62038	R3178	F150 (92-)
E9TH8005EA	62098	R1503	F150 (92-)
E9TH8005EA	620981	R1503	F150 (92-)
E9TH8005EA	62038	R3178	F250 (92-)
E9TH8005EA	62098	R1503	F250 (92-)
E9TH8005EA	620981	R1503	F250 (92-)
E9TH8005EA	62038	R3178	F350 (92-)
E9TH8005EA	62098	R1503	F350 (92-)
E9TH8005EA	620981	R1503	F350 (92-)
E9TH8005EA	62038	R3178	F450 (92-)
E9TH8005EA	62098	R1503	F450 (92-)
E9TH8005EA	620981	R1503	F450 (92-)
E9TH8005EA	62038	R3178	RANGER (85-)
E9TH8005EA	62098	R1503	RANGER (85-)
E9TH8005EA	620981	R1503	RANGER (85-)
E9TZ8005H	62038	R3178	BRONCO (85-)
E9TZ8005H	62098	R1503	BRONCO (85-)
E9TZ8005H	620981	R1503	BRONCO (85-)
E9TZ8005H	62038	R3178	BRONCO (92-)
E9TZ8005H	62098	R1503	BRONCO (92-)
E9TZ8005H	620981	R1503	BRONCO (92-)
E9TZ8005H	62038	R3178	F150 (92-)
E9TZ8005H	62098	R1503	F150 (92-)

CROSS REFERENCE LIST

O.E	Nissens	DRAW.	
(../..) FORD USA LIGHT VAN			
E9TZ8005H	620981	R1503	F150 (92-)
E9TZ8005H	62038	R3178	F250 (92-)
E9TZ8005H	62098	R1503	F250 (92-)
E9TZ8005H	620981	R1503	F250 (92-)
E9TZ8005H	62038	R3178	F350 (92-)
E9TZ8005H	62098	R1503	F350 (92-)
E9TZ8005H	620981	R1503	F350 (92-)
E9TZ8005H	62038	R3178	F450 (92-)
E9TZ8005H	62098	R1503	F450 (92-)
E9TZ8005H	620981	R1503	F450 (92-)
E9TZ8005H	62038	R3178	RANGER (85-)
E9TZ8005H	62098	R1503	RANGER (85-)
E9TZ8005H	620981	R1503	RANGER (85-)
E9TZ8005J	62038	R3178	BRONCO (85-)
E9TZ8005J	62098	R1503	BRONCO (85-)
E9TZ8005J	620981	R1503	BRONCO (85-)
E9TZ8005J	62038	R3178	BRONCO (92-)
E9TZ8005J	62098	R1503	BRONCO (92-)
E9TZ8005J	620981	R1503	BRONCO (92-)
E9TZ8005J	62038	R3178	F150 (92-)
E9TZ8005J	62098	R1503	F150 (92-)
E9TZ8005J	620981	R1503	F150 (92-)
E9TZ8005J	62038	R3178	F250 (92-)
E9TZ8005J	62098	R1503	F250 (92-)
E9TZ8005J	620981	R1503	F250 (92-)
E9TZ8005J	62038	R3178	F350 (92-)
E9TZ8005J	62098	R1503	F350 (92-)
E9TZ8005J	620981	R1503	F350 (92-)
E9TZ8005J	62038	R3178	F450 (92-)
E9TZ8005J	62098	R1503	F450 (92-)
E9TZ8005J	620981	R1503	F450 (92-)
E9TZ8005J	62038	R3178	RANGER (85-)
E9TZ8005J	62098	R1503	RANGER (85-)
E9TZ8005J	620981	R1503	RANGER (85-)
F09H8005AA	62108	R1342	AEROSTAR (85-)
F09Z8005A	62108	R1342	AEROSTAR (85-)
F2TH8005LA	62103	R1504	BRONCO (85-)
F2TH8005LA	62103	R1504	BRONCO (92-)
F2TH8005LA	62103	R1504	F150 (92-)
F2TH8005LA	62103	R1504	F250 (92-)
F2TH8005LA	62103	R1504	F350 (92-)
F2TH8005LA	62103	R1504	RANGER (85-)
F2TH8005MA	62103	R1504	BRONCO (85-)
F2TH8005MA	62103	R1504	RANGER (85-)
F2TH8005PA	62103	R1504	BRONCO (85-)
F2TH8005PA	62103	R1504	RANGER (85-)
F2TH8005RA	62103	R1504	BRONCO (85-)
F2TH8005RA	62103	R1504	BRONCO (92-)
F2TH8005RA	62103	R1504	F150 (92-)
F2TH8005RA	62103	R1504	F250 (92-)
F2TH8005RA	62103	R1504	F350 (92-)
F2TH8005RA	62103	R1504	RANGER (85-)

O.E	Nissens	DRAW.	
(../..) FORD USA LIGHT VAN			
F2TH8005TA	62038	R3178	BRONCO (85-)
F2TH8005TA	62098	R1503	BRONCO (85-)
F2TH8005TA	620981	R1503	BRONCO (85-)
F2TH8005TA	62038	R3178	BRONCO (92-)
F2TH8005TA	62098	R1503	BRONCO (92-)
F2TH8005TA	620981	R1503	BRONCO (92-)
F2TH8005TA	62038	R3178	F150 (92-)
F2TH8005TA	62098	R1503	F150 (92-)
F2TH8005TA	620981	R1503	F150 (92-)
F2TH8005TA	62038	R3178	F250 (92-)
F2TH8005TA	62098	R1503	F250 (92-)
F2TH8005TA	620981	R1503	F250 (92-)
F2TH8005TA	62038	R3178	F350 (92-)
F2TH8005TA	62098	R1503	F350 (92-)
F2TH8005TA	620981	R1503	F350 (92-)
F2TH8005TA	62038	R3178	F450 (92-)
F2TH8005TA	62098	R1503	F450 (92-)
F2TH8005TA	620981	R1503	F450 (92-)
F2TH8005TA	62038	R3178	RANGER (85-)
F2TH8005TA	62098	R1503	RANGER (85-)
F2TH8005TA	620981	R1503	RANGER (85-)
F2TH8005UA	62038	R3178	BRONCO (85-)
F2TH8005UA	62098	R1503	BRONCO (85-)
F2TH8005UA	620981	R1503	BRONCO (85-)
F2TH8005UA	62038	R3178	BRONCO (92-)
F2TH8005UA	62098	R1503	BRONCO (92-)
F2TH8005UA	620981	R1503	BRONCO (92-)
F2TH8005UA	62038	R3178	F150 (92-)
F2TH8005UA	62098	R1503	F150 (92-)
F2TH8005UA	620981	R1503	F150 (92-)
F2TH8005UA	62038	R3178	F250 (92-)
F2TH8005UA	62098	R1503	F250 (92-)
F2TH8005UA	620981	R1503	F250 (92-)
F2TH8005UA	62038	R3178	F350 (92-)
F2TH8005UA	62098	R1503	F350 (92-)
F2TH8005UA	620981	R1503	F350 (92-)
F2TH8005UA	62038	R3178	F450 (92-)
F2TH8005UA	62098	R1503	F450 (92-)
F2TH8005UA	620981	R1503	F450 (92-)
F2TH8005UA	62038	R3178	RANGER (85-)
F2TH8005UA	62098	R1503	RANGER (85-)
F2TH8005UA	620981	R1503	RANGER (85-)
F2TH8005VA	62038	R3178	BRONCO (85-)
F2TH8005VA	62098	R1503	BRONCO (85-)
F2TH8005VA	620981	R1503	BRONCO (85-)
F2TH8005VA	62038	R3178	BRONCO (92-)
F2TH8005VA	62098	R1503	BRONCO (92-)
F2TH8005VA	620981	R1503	BRONCO (92-)
F2TH8005VA	62038	R3178	F150 (92-)
F2TH8005VA	62098	R1503	F150 (92-)
F2TH8005VA	620981	R1503	F150 (92-)
F2TH8005VA	62038	R3178	F250 (92-)

CROSS REFERENCE LIST

O.E	Nissens	DRAW.	
(../..) FORD USA LIGHT VAN			
F2TH8005VA	62098	R1503	F250 (92-)
F2TH8005VA	620981	R1503	F250 (92-)
F2TH8005VA	62038	R3178	F350 (92-)
F2TH8005VA	62098	R1503	F350 (92-)
F2TH8005VA	620981	R1503	F350 (92-)
F2TH8005VA	62038	R3178	F450 (92-)
F2TH8005VA	62098	R1503	F450 (92-)
F2TH8005VA	620981	R1503	F450 (92-)
F2TH8005VA	62038	R3178	RANGER (85-)
F2TH8005VA	62098	R1503	RANGER (85-)
F2TH8005VA	620981	R1503	RANGER (85-)
F2TH8005XA	62038	R3178	BRONCO (85-)
F2TH8005XA	62098	R1503	BRONCO (85-)
F2TH8005XA	620981	R1503	BRONCO (85-)
F2TH8005XA	62038	R3178	BRONCO (92-)
F2TH8005XA	62098	R1503	BRONCO (92-)
F2TH8005XA	620981	R1503	BRONCO (92-)
F2TH8005XA	62038	R3178	F150 (92-)
F2TH8005XA	62098	R1503	F150 (92-)
F2TH8005XA	620981	R1503	F150 (92-)
F2TH8005XA	62038	R3178	F250 (92-)
F2TH8005XA	62098	R1503	F250 (92-)
F2TH8005XA	620981	R1503	F250 (92-)
F2TH8005XA	62038	R3178	F350 (92-)
F2TH8005XA	62098	R1503	F350 (92-)
F2TH8005XA	620981	R1503	F350 (92-)
F2TH8005XA	62038	R3178	F450 (92-)
F2TH8005XA	62098	R1503	F450 (92-)
F2TH8005XA	620981	R1503	F450 (92-)
F2TH8005XA	62038	R3178	RANGER (85-)
F2TH8005XA	62098	R1503	RANGER (85-)
F2TH8005XA	620981	R1503	RANGER (85-)
F2TH8005YA	62038	R3178	BRONCO (85-)
F2TH8005YA	62098	R1503	BRONCO (85-)
F2TH8005YA	620981	R1503	BRONCO (85-)
F2TH8005YA	62038	R3178	BRONCO (92-)
F2TH8005YA	62098	R1503	BRONCO (92-)
F2TH8005YA	620981	R1503	BRONCO (92-)
F2TH8005YA	62038	R3178	F150 (92-)
F2TH8005YA	62098	R1503	F150 (92-)
F2TH8005YA	620981	R1503	F150 (92-)
F2TH8005YA	62038	R3178	F250 (92-)
F2TH8005YA	62098	R1503	F250 (92-)
F2TH8005YA	620981	R1503	F250 (92-)
F2TH8005YA	62038	R3178	F350 (92-)
F2TH8005YA	62098	R1503	F350 (92-)
F2TH8005YA	620981	R1503	F350 (92-)
F2TH8005YA	62038	R3178	F450 (92-)
F2TH8005YA	62098	R1503	F450 (92-)
F2TH8005YA	620981	R1503	F450 (92-)
F2TH8005YA	62038	R3178	RANGER (85-)
F2TH8005YA	62098	R1503	RANGER (85-)

O.E	Nissens	DRAW.	
(../..) FORD USA LIGHT VAN			
F2TH8005YA	620981	R1503	RANGER (85-)
F2TZ8005BA	62103	R1504	BRONCO (92-)
F2TZ8005BA	62103	R1504	F150 (92-)
F2TZ8005BA	62103	R1504	F250 (92-)
F2TZ8005BA	62103	R1504	F350 (92-)
F2TZ8005DA	62038	R3178	BRONCO (92-)
F2TZ8005DA	62098	R1503	BRONCO (92-)
F2TZ8005DA	620981	R1503	BRONCO (92-)
F2TZ8005DA	62038	R3178	F150 (92-)
F2TZ8005DA	62098	R1503	F150 (92-)
F2TZ8005DA	620981	R1503	F150 (92-)
F2TZ8005DA	62038	R3178	F250 (92-)
F2TZ8005DA	62098	R1503	F250 (92-)
F2TZ8005DA	620981	R1503	F250 (92-)
F2TZ8005DA	62038	R3178	F350 (92-)
F2TZ8005DA	62098	R1503	F350 (92-)
F2TZ8005DA	620981	R1503	F350 (92-)
F2TZ8005DA	62038	R3178	F450 (92-)
F2TZ8005DA	62098	R1503	F450 (92-)
F2TZ8005DA	620981	R1503	F450 (92-)
F2TZ8005H	62103	R1504	BRONCO (85-)
F2TZ8005H	62103	R1504	BRONCO (92-)
F2TZ8005H	62103	R1504	F150 (92-)
F2TZ8005H	62103	R1504	F250 (92-)
F2TZ8005H	62103	R1504	F350 (92-)
F2TZ8005H	62103	R1504	RANGER (85-)
F2TZ8005J	62103	R1504	BRONCO (85-)
F2TZ8005J	62103	R1504	RANGER (85-)
F2TZ8005KA	62038	R3178	BRONCO (92-)
F2TZ8005KA	62098	R1503	BRONCO (92-)
F2TZ8005KA	620981	R1503	BRONCO (92-)
F2TZ8005KA	62038	R3178	F150 (92-)
F2TZ8005KA	62098	R1503	F150 (92-)
F2TZ8005KA	620981	R1503	F150 (92-)
F2TZ8005KA	62038	R3178	F250 (92-)
F2TZ8005KA	62098	R1503	F250 (92-)
F2TZ8005KA	620981	R1503	F250 (92-)
F2TZ8005KA	62038	R3178	F350 (92-)
F2TZ8005KA	62098	R1503	F350 (92-)
F2TZ8005KA	620981	R1503	F350 (92-)
F2TZ8005KA	62038	R3178	F450 (92-)
F2TZ8005KA	62098	R1503	F450 (92-)
F2TZ8005KA	620981	R1503	F450 (92-)
F2TZ8005L	62103	R1504	BRONCO (85-)
F2TZ8005L	62103	R1504	RANGER (85-)
F2TZ8005M	62103	R1504	BRONCO (85-)
F2TZ8005M	62103	R1504	BRONCO (92-)
F2TZ8005M	62103	R1504	F150 (92-)
F2TZ8005M	62103	R1504	F250 (92-)
F2TZ8005M	62103	R1504	F350 (92-)
F2TZ8005M	62103	R1504	RANGER (85-)
F2TZ8005MA	62103	R1504	BRONCO (92-)

CROSS REFERENCE LIST

O.E	Nissens	DRAW.	
(../..) FORD USA LIGHT VAN			
F2TZ8005MA	62103	R1504	F150 (92-)
F2TZ8005MA	62103	R1504	F250 (92-)
F2TZ8005MA	62103	R1504	F350 (92-)
F2TZ8005P	62038	R3178	BRONCO (85-)
F2TZ8005P	62098	R1503	BRONCO (85-)
F2TZ8005P	620981	R1503	BRONCO (85-)
F2TZ8005P	62038	R3178	BRONCO (92-)
F2TZ8005P	62098	R1503	BRONCO (92-)
F2TZ8005P	620981	R1503	BRONCO (92-)
F2TZ8005P	62038	R3178	F150 (92-)
F2TZ8005P	62098	R1503	F150 (92-)
F2TZ8005P	620981	R1503	F150 (92-)
F2TZ8005P	62038	R3178	F250 (92-)
F2TZ8005P	62098	R1503	F250 (92-)
F2TZ8005P	620981	R1503	F250 (92-)
F2TZ8005P	62038	R3178	F350 (92-)
F2TZ8005P	62098	R1503	F350 (92-)
F2TZ8005P	620981	R1503	F350 (92-)
F2TZ8005P	62038	R3178	F450 (92-)
F2TZ8005P	62098	R1503	F450 (92-)
F2TZ8005P	620981	R1503	F450 (92-)
F2TZ8005P	62038	R3178	RANGER (85-)
F2TZ8005P	62098	R1503	RANGER (85-)
F2TZ8005P	620981	R1503	RANGER (85-)
F2TZ8005R	62038	R3178	BRONCO (85-)
F2TZ8005R	62098	R1503	BRONCO (85-)
F2TZ8005R	620981	R1503	BRONCO (85-)
F2TZ8005R	62038	R3178	BRONCO (92-)
F2TZ8005R	62098	R1503	BRONCO (92-)
F2TZ8005R	620981	R1503	BRONCO (92-)
F2TZ8005R	62038	R3178	F150 (92-)
F2TZ8005R	62098	R1503	F150 (92-)
F2TZ8005R	620981	R1503	F150 (92-)
F2TZ8005R	62038	R3178	F250 (92-)
F2TZ8005R	62098	R1503	F250 (92-)
F2TZ8005R	620981	R1503	F250 (92-)
F2TZ8005R	62038	R3178	F350 (92-)
F2TZ8005R	62098	R1503	F350 (92-)
F2TZ8005R	620981	R1503	F350 (92-)
F2TZ8005R	62038	R3178	F450 (92-)
F2TZ8005R	62098	R1503	F450 (92-)
F2TZ8005R	620981	R1503	F450 (92-)
F2TZ8005R	62038	R3178	RANGER (85-)
F2TZ8005R	62098	R1503	RANGER (85-)
F2TZ8005R	620981	R1503	RANGER (85-)
F2TZ8005S	62038	R3178	BRONCO (85-)
F2TZ8005S	62098	R1503	BRONCO (85-)
F2TZ8005S	620981	R1503	BRONCO (85-)
F2TZ8005S	62038	R3178	BRONCO (92-)
F2TZ8005S	62098	R1503	BRONCO (92-)
F2TZ8005S	620981	R1503	BRONCO (92-)
F2TZ8005S	62038	R3178	F150 (92-)

O.E	Nissens	DRAW.	
(../..) FORD USA LIGHT VAN			
F2TZ8005S	62098	R1503	F150 (92-)
F2TZ8005S	620981	R1503	F150 (92-)
F2TZ8005S	62038	R3178	F250 (92-)
F2TZ8005S	62098	R1503	F250 (92-)
F2TZ8005S	620981	R1503	F250 (92-)
F2TZ8005S	62038	R3178	F350 (92-)
F2TZ8005S	62098	R1503	F350 (92-)
F2TZ8005S	620981	R1503	F350 (92-)
F2TZ8005S	62038	R3178	F450 (92-)
F2TZ8005S	62098	R1503	F450 (92-)
F2TZ8005S	620981	R1503	F450 (92-)
F2TZ8005S	62038	R3178	RANGER (85-)
F2TZ8005S	62098	R1503	RANGER (85-)
F2TZ8005S	620981	R1503	RANGER (85-)
F2TZ8005T	62038	R3178	BRONCO (85-)
F2TZ8005T	62098	R1503	BRONCO (85-)
F2TZ8005T	620981	R1503	BRONCO (85-)
F2TZ8005T	62038	R3178	BRONCO (92-)
F2TZ8005T	62098	R1503	BRONCO (92-)
F2TZ8005T	620981	R1503	BRONCO (92-)
F2TZ8005T	62038	R3178	F150 (92-)
F2TZ8005T	62098	R1503	F150 (92-)
F2TZ8005T	620981	R1503	F150 (92-)
F2TZ8005T	62038	R3178	F250 (92-)
F2TZ8005T	62098	R1503	F250 (92-)
F2TZ8005T	620981	R1503	F250 (92-)
F2TZ8005T	62038	R3178	F350 (92-)
F2TZ8005T	62098	R1503	F350 (92-)
F2TZ8005T	620981	R1503	F350 (92-)
F2TZ8005T	62038	R3178	F450 (92-)
F2TZ8005T	62098	R1503	F450 (92-)
F2TZ8005T	620981	R1503	F450 (92-)
F2TZ8005T	62038	R3178	RANGER (85-)
F2TZ8005T	62098	R1503	RANGER (85-)
F2TZ8005T	620981	R1503	RANGER (85-)
F2TZ8005U	62038	R3178	BRONCO (85-)
F2TZ8005U	62098	R1503	BRONCO (85-)
F2TZ8005U	620981	R1503	BRONCO (85-)
F2TZ8005U	62038	R3178	BRONCO (92-)
F2TZ8005U	62098	R1503	BRONCO (92-)
F2TZ8005U	620981	R1503	BRONCO (92-)
F2TZ8005U	62038	R3178	F150 (92-)
F2TZ8005U	62098	R1503	F150 (92-)
F2TZ8005U	620981	R1503	F150 (92-)
F2TZ8005U	62038	R3178	F250 (92-)
F2TZ8005U	62098	R1503	F250 (92-)
F2TZ8005U	620981	R1503	F250 (92-)
F2TZ8005U	62038	R3178	F350 (92-)
F2TZ8005U	62098	R1503	F350 (92-)
F2TZ8005U	620981	R1503	F350 (92-)
F2TZ8005U	62038	R3178	F450 (92-)
F2TZ8005U	62098	R1503	F450 (92-)

CROSS REFERENCE LIST

O.E	Nissens	DRAW.	
(../..) FORD USA LIGHT VAN			
F2TZ8005U	620981	R1503	F450 (92-)
F2TZ8005U	62038	R3178	RANGER (85-)
F2TZ8005U	62098	R1503	RANGER (85-)
F2TZ8005U	620981	R1503	RANGER (85-)
F2TZ8005V	62038	R3178	BRONCO (85-)
F2TZ8005V	62098	R1503	BRONCO (85-)
F2TZ8005V	620981	R1503	BRONCO (85-)
F2TZ8005V	62038	R3178	BRONCO (92-)
F2TZ8005V	62098	R1503	BRONCO (92-)
F2TZ8005V	620981	R1503	BRONCO (92-)
F2TZ8005V	62038	R3178	F150 (92-)
F2TZ8005V	62098	R1503	F150 (92-)
F2TZ8005V	620981	R1503	F150 (92-)
F2TZ8005V	62038	R3178	F250 (92-)
F2TZ8005V	62098	R1503	F250 (92-)
F2TZ8005V	620981	R1503	F250 (92-)
F2TZ8005V	62038	R3178	F350 (92-)
F2TZ8005V	62098	R1503	F350 (92-)
F2TZ8005V	620981	R1503	F350 (92-)
F2TZ8005V	62038	R3178	F450 (92-)
F2TZ8005V	62098	R1503	F450 (92-)
F2TZ8005V	620981	R1503	F450 (92-)
F2TZ8005V	62038	R3178	RANGER (85-)
F2TZ8005V	62098	R1503	RANGER (85-)
F2TZ8005V	620981	R1503	RANGER (85-)
F39Z8005AA	62109	R1269	AEROSTAR (85-)
F3TH8005BA	62038	R3178	BRONCO (85-)
F3TH8005BA	62098	R1503	BRONCO (85-)
F3TH8005BA	620981	R1503	BRONCO (85-)
F3TH8005BA	62038	R3178	BRONCO (92-)
F3TH8005BA	62098	R1503	BRONCO (92-)
F3TH8005BA	620981	R1503	BRONCO (92-)
F3TH8005BA	62038	R3178	F150 (92-)
F3TH8005BA	62098	R1503	F150 (92-)
F3TH8005BA	620981	R1503	F150 (92-)
F3TH8005BA	62038	R3178	F250 (92-)
F3TH8005BA	62098	R1503	F250 (92-)
F3TH8005BA	620981	R1503	F250 (92-)
F3TH8005BA	62038	R3178	F350 (92-)
F3TH8005BA	62098	R1503	F350 (92-)
F3TH8005BA	620981	R1503	F350 (92-)
F3TH8005BA	62038	R3178	F450 (92-)
F3TH8005BA	62098	R1503	F450 (92-)
F3TH8005BA	620981	R1503	F450 (92-)
F3TH8005BA	62038	R3178	RANGER (85-)
F3TH8005BA	62098	R1503	RANGER (85-)
F3TH8005BA	620981	R1503	RANGER (85-)
F3TH8005FA	62038	R3178	BRONCO (85-)
F3TH8005FA	62098	R1503	BRONCO (85-)
F3TH8005FA	620981	R1503	BRONCO (85-)
F3TH8005FA	62038	R3178	BRONCO (92-)
F3TH8005FA	62098	R1503	BRONCO (92-)

O.E	Nissens	DRAW.	
(../..) FORD USA LIGHT VAN			
F3TH8005FA	620981	R1503	BRONCO (92-)
F3TH8005FA	62038	R3178	F150 (92-)
F3TH8005FA	62098	R1503	F150 (92-)
F3TH8005FA	620981	R1503	F150 (92-)
F3TH8005FA	62038	R3178	F250 (92-)
F3TH8005FA	62098	R1503	F250 (92-)
F3TH8005FA	620981	R1503	F250 (92-)
F3TH8005FA	62038	R3178	F350 (92-)
F3TH8005FA	62098	R1503	F350 (92-)
F3TH8005FA	620981	R1503	F350 (92-)
F3TH8005FA	62038	R3178	F450 (92-)
F3TH8005FA	62098	R1503	F450 (92-)
F3TH8005FA	620981	R1503	F450 (92-)
F3TH8005FA	62038	R3178	RANGER (85-)
F3TH8005FA	62098	R1503	RANGER (85-)
F3TH8005FA	620981	R1503	RANGER (85-)
F3TH8005AA	62038	R3178	BRONCO (85-)
F3TH8005AA	62098	R1503	BRONCO (85-)
F3TH8005AA	620981	R1503	BRONCO (85-)
F3TH8005AA	62038	R3178	BRONCO (92-)
F3TH8005AA	62098	R1503	BRONCO (92-)
F3TH8005AA	620981	R1503	BRONCO (92-)
F3TH8005AA	62038	R3178	F150 (92-)
F3TH8005AA	62098	R1503	F150 (92-)
F3TH8005AA	620981	R1503	F150 (92-)
F3TH8005AA	62038	R3178	F250 (92-)
F3TH8005AA	62098	R1503	F250 (92-)
F3TH8005AA	620981	R1503	F250 (92-)
F3TH8005AA	62038	R3178	F350 (92-)
F3TH8005AA	62098	R1503	F350 (92-)
F3TH8005AA	620981	R1503	F350 (92-)
F3TH8005AA	62038	R3178	F450 (92-)
F3TH8005AA	62098	R1503	F450 (92-)
F3TH8005AA	620981	R1503	F450 (92-)
F3TH8005AA	62038	R3178	RANGER (85-)
F3TH8005AA	62098	R1503	RANGER (85-)
F3TH8005AA	620981	R1503	RANGER (85-)
F3TH8N150DABX	62038	R3178	BRONCO (85-)
F3TH8N150DABX	62098	R1503	BRONCO (85-)
F3TH8N150DABX	620981	R1503	BRONCO (85-)
F3TH8N150DABX	62038	R3178	BRONCO (92-)
F3TH8N150DABX	62098	R1503	BRONCO (92-)
F3TH8N150DABX	620981	R1503	BRONCO (92-)
F3TH8N150DABX	62038	R3178	F150 (92-)
F3TH8N150DABX	62098	R1503	F150 (92-)
F3TH8N150DABX	620981	R1503	F150 (92-)
F3TH8N150DABX	62038	R3178	F250 (92-)
F3TH8N150DABX	62098	R1503	F250 (92-)
F3TH8N150DABX	620981	R1503	F250 (92-)
F3TH8N150DABX	62038	R3178	F350 (92-)
F3TH8N150DABX	62098	R1503	F350 (92-)
F3TH8N150DABX	620981	R1503	F350 (92-)

CROSS REFERENCE LIST

O.E	Nissens	DRAW.	
(../..) FORD USA LIGHT VAN			
F3TH8N150DABX	62038	R3178	F450 (92-)
F3TH8N150DABX	62098	R1503	F450 (92-)
F3TH8N150DABX	620981	R1503	F450 (92-)
F3TH8N150DABX	62038	R3178	RANGER (85-)
F3TH8N150DABX	62098	R1503	RANGER (85-)
F3TH8N150DABX	620981	R1503	RANGER (85-)
F3TZ8005A	62038	R3178	BRONCO (85-)
F3TZ8005A	62098	R1503	BRONCO (85-)
F3TZ8005A	620981	R1503	BRONCO (85-)
F3TZ8005A	62038	R3178	BRONCO (92-)
F3TZ8005A	62098	R1503	BRONCO (92-)
F3TZ8005A	620981	R1503	BRONCO (92-)
F3TZ8005A	62038	R3178	F150 (92-)
F3TZ8005A	62098	R1503	F150 (92-)
F3TZ8005A	620981	R1503	F150 (92-)
F3TZ8005A	62038	R3178	F250 (92-)
F3TZ8005A	62098	R1503	F250 (92-)
F3TZ8005A	620981	R1503	F250 (92-)
F3TZ8005A	62038	R3178	F350 (92-)
F3TZ8005A	62098	R1503	F350 (92-)
F3TZ8005A	620981	R1503	F350 (92-)
F3TZ8005A	62038	R3178	F450 (92-)
F3TZ8005A	62098	R1503	F450 (92-)
F3TZ8005A	620981	R1503	F450 (92-)
F3TZ8005A	62038	R3178	RANGER (85-)
F3TZ8005A	62098	R1503	RANGER (85-)
F3TZ8005A	620981	R1503	RANGER (85-)
F3TZ8005B	62038	R3178	BRONCO (85-)
F3TZ8005B	62098	R1503	BRONCO (85-)
F3TZ8005B	620981	R1503	BRONCO (85-)
F3TZ8005B	62038	R3178	BRONCO (92-)
F3TZ8005B	62098	R1503	BRONCO (92-)
F3TZ8005B	620981	R1503	BRONCO (92-)
F3TZ8005B	62038	R3178	F150 (92-)
F3TZ8005B	62098	R1503	F150 (92-)
F3TZ8005B	620981	R1503	F150 (92-)
F3TZ8005B	62038	R3178	F250 (92-)
F3TZ8005B	62098	R1503	F250 (92-)
F3TZ8005B	620981	R1503	F250 (92-)
F3TZ8005B	62038	R3178	F350 (92-)
F3TZ8005B	62098	R1503	F350 (92-)
F3TZ8005B	620981	R1503	F350 (92-)
F3TZ8005B	62038	R3178	F450 (92-)
F3TZ8005B	62098	R1503	F450 (92-)
F3TZ8005B	620981	R1503	F450 (92-)
F3TZ8005B	62038	R3178	RANGER (85-)
F3TZ8005B	62098	R1503	RANGER (85-)
F3TZ8005B	620981	R1503	RANGER (85-)
F47H19710AA	94472	C0478	BRONCO (85-)
F47H19710AA	94472	C0478	RANGER (85-)
F47H19710AA	94472	C0478	RANGER PICKUP (93-)
F49Z8005BA	62108	R1342	AEROSTAR (85-)

O.E	Nissens	DRAW.	
(../..) FORD USA LIGHT VAN			
F57Z19712A	94475	C0481	RANGER PICKUP (93-)
F81Z8005FA	69206	R3301	F250 SUPER DUTY (99-)
F81Z8005FA	69206	R3301	F350 SUPER DUTY (99-)
F87Z19712BA	94476	C0482	RANGER PICKUP (98-)
YC3Z8005BA	69205	R3305	F250 SUPER DUTY (99-)
YC3Z8005BA	69205	R3305	F350 SUPER DUTY (99-)
YC3Z8005BA	69205	R3305	F450 SUPER DUTY (99-)
YC3Z8005BA	69205	R3305	F550 SUPER DUTY (99-)
YC3Z8005AA	69205	R3305	F250 SUPER DUTY (99-)
YC3Z8005AA	69205	R3305	F350 SUPER DUTY (99-)
YC3Z8005AA	69205	R3305	F450 SUPER DUTY (99-)
YC3Z8005AA	69205	R3305	F550 SUPER DUTY (99-)
YJ322	94472	C0478	RANGER PICKUP (93-)
YJ355	94475	C0481	RANGER PICKUP (93-)
YJ433	94476	C0482	RANGER PICKUP (98-)
GMC LIGHT VAN			
3043874	60970	R2091	JIMMY (82-)
3043874	60970A	R2091	JIMMY (82-)
3043874	60970	R2091	PICKUP R/V
3043874	60970A	R2091	PICKUP R/V
3043874	60970	R2091	SUBURBAN (81-)
3043874	60970A	R2091	SUBURBAN (81-)
3043874	60970	R2091	VAN G-SERIE (81-)
3043874	60970A	R2091	VAN G-SERIE (81-)
3043874	60970	R2091	VAN P-SERIE (81-)
3043874	60970A	R2091	VAN P-SERIE (81-)
3043875	60970	R2091	JIMMY (82-)
3043875	60970A	R2091	JIMMY (82-)
3043875	60970	R2091	PICKUP R/V
3043875	60970A	R2091	PICKUP R/V
3043875	60970	R2091	SUBURBAN (81-)
3043875	60970A	R2091	SUBURBAN (81-)
3043875	60970	R2091	VAN G-SERIE (81-)
3043875	60970A	R2091	VAN G-SERIE (81-)
3043875	60970	R2091	VAN P-SERIE (81-)
3043875	60970A	R2091	VAN P-SERIE (81-)
3043877	60971	R2092	JIMMY (82-)
3043877	60971	R2092	PICKUP C/K
3043877	60971	R2092	PICKUP R/V
3043877	60971	R2092	SUBURBAN (81-)
3043877	60971	R2092	VAN P-SERIE (81-)
3043881	60971	R2092	JIMMY (82-)
3043881	60971	R2092	PICKUP C/K
3043881	60971	R2092	PICKUP R/V
3043881	60971	R2092	SUBURBAN (81-)
3043881	60971	R2092	VAN P-SERIE (81-)
3043882	60971	R2092	JIMMY (82-)
3043882	60971	R2092	PICKUP C/K
3043882	60971	R2092	PICKUP R/V
3043882	60971	R2092	SUBURBAN (81-)
3043882	60971	R2092	VAN P-SERIE (81-)

CROSS REFERENCE LIST

O.E	Nissens	DRAW.	
(../..) GMC LIGHT VAN			
3046774	60970	R2091	JIMMY (82-)
3046774	60970A	R2091	JIMMY (82-)
3046774	60970	R2091	PICKUP R/V
3046774	60970A	R2091	PICKUP R/V
3046774	60970	R2091	SUBURBAN (81-)
3046774	60970A	R2091	SUBURBAN (81-)
3046774	60970	R2091	VAN G-SERIE (81-)
3046774	60970A	R2091	VAN G-SERIE (81-)
3046774	60970	R2091	VAN P-SERIE (81-)
3046774	60970A	R2091	VAN P-SERIE (81-)
3046775	60970	R2091	JIMMY (82-)
3046775	60970A	R2091	JIMMY (82-)
3046775	60970	R2091	PICKUP R/V
3046775	60970A	R2091	PICKUP R/V
3046775	60970	R2091	SUBURBAN (81-)
3046775	60970A	R2091	SUBURBAN (81-)
3046775	60970	R2091	VAN G-SERIE (81-)
3046775	60970A	R2091	VAN G-SERIE (81-)
3046775	60970	R2091	VAN P-SERIE (81-)
3046775	60970A	R2091	VAN P-SERIE (81-)
3046776	60970	R2091	JIMMY (82-)
3046776	60970A	R2091	JIMMY (82-)
3046776	60970	R2091	PICKUP R/V
3046776	60970A	R2091	PICKUP R/V
3046776	60970	R2091	SUBURBAN (81-)
3046776	60970A	R2091	SUBURBAN (81-)
3046776	60970	R2091	VAN G-SERIE (81-)
3046776	60970A	R2091	VAN G-SERIE (81-)
3046776	60970	R2091	VAN P-SERIE (81-)
3046776	60970A	R2091	VAN P-SERIE (81-)
3046777	60971	R2092	JIMMY (82-)
3046777	60971	R2092	PICKUP C/K
3046777	60971	R2092	PICKUP R/V
3046777	60971	R2092	SUBURBAN (81-)
3046777	60971	R2092	VAN P-SERIE (81-)
3048771	60960	R2095	JIMMY (82-)
3048771	60960	R2095	PICKUP S/T
3048771	60960	R2095	SONOMA (91-)
3048772	60960	R2095	JIMMY (82-)
3048772	60960	R2095	PICKUP S/T
3048772	60960	R2095	SONOMA (91-)
3049127	60974	R2104	JIMMY (82-)
3049127	60974	R2104	PICKUP C/K
3049127	60974	R2104	PICKUP R/V
3049127	60974	R2104	SUBURBAN (81-)
3049127	60974	R2104	VAN G-SERIE (81-)
3049127	60974	R2104	VAN P-SERIE (81-)
3052724	60974	R2104	JIMMY (82-)
3052724	60974	R2104	PICKUP C/K
3052724	60974	R2104	PICKUP R/V
3052724	60974	R2104	SUBURBAN (81-)
3052724	60974	R2104	VAN G-SERIE (81-)

O.E	Nissens	DRAW.	
(../..) GMC LIGHT VAN			
3052724	60974	R2104	VAN P-SERIE (81-)
3053701	60974	R2104	JIMMY (82-)
3053701	60974	R2104	PICKUP C/K
3053701	60974	R2104	PICKUP R/V
3053701	60974	R2104	SUBURBAN (81-)
3053701	60974	R2104	VAN G-SERIE (81-)
3053701	60974	R2104	VAN P-SERIE (81-)
3054215	60960	R2095	JIMMY (82-)
3054215	60960	R2095	PICKUP S/T
3054215	60960	R2095	SONOMA (91-)
3055259	60974	R2104	JIMMY (82-)
3055259	60974	R2104	PICKUP C/K
3055259	60974	R2104	PICKUP R/V
3055259	60974	R2104	SUBURBAN (81-)
3055259	60974	R2104	VAN G-SERIE (81-)
3055259	60974	R2104	VAN P-SERIE (81-)
3055364	60971	R2092	JIMMY (82-)
3055364	60971	R2092	PICKUP C/K
3055364	60971	R2092	PICKUP R/V
3055364	60971	R2092	SUBURBAN (81-)
3055364	60971	R2092	VAN P-SERIE (81-)
3055365	60971	R2092	JIMMY (82-)
3055365	60971	R2092	PICKUP C/K
3055365	60971	R2092	PICKUP R/V
3055365	60971	R2092	SUBURBAN (81-)
3055365	60971	R2092	VAN P-SERIE (81-)
3055366	60971	R2092	JIMMY (82-)
3055366	60971	R2092	PICKUP C/K
3055366	60971	R2092	PICKUP R/V
3055366	60971	R2092	SUBURBAN (81-)
3055366	60971	R2092	VAN P-SERIE (81-)
3055694	60960	R2095	JIMMY (82-)
3055694	60960	R2095	PICKUP S/T
3055694	60960	R2095	SONOMA (91-)
3057965	60974	R2104	JIMMY (82-)
3057965	60974	R2104	PICKUP C/K
3057965	60974	R2104	PICKUP R/V
3057965	60974	R2104	SUBURBAN (81-)
3057965	60974	R2104	VAN G-SERIE (81-)
3057965	60974	R2104	VAN P-SERIE (81-)
3057966	60974	R2104	JIMMY (82-)
3057966	60974	R2104	PICKUP C/K
3057966	60974	R2104	PICKUP R/V
3057966	60974	R2104	SUBURBAN (81-)
3057966	60974	R2104	VAN G-SERIE (81-)
3057966	60974	R2104	VAN P-SERIE (81-)
3057978	60974	R2104	JIMMY (82-)
3057978	60974	R2104	PICKUP C/K
3057978	60974	R2104	PICKUP R/V
3057978	60974	R2104	SUBURBAN (81-)
3057978	60974	R2104	VAN G-SERIE (81-)
3057978	60974	R2104	VAN P-SERIE (81-)

CROSS REFERENCE LIST

O.E	Nissens	DRAW.	
(../..) GMC LIGHT VAN			
3057983	60974	R2104	JIMMY (82-)
3057983	60974	R2104	PICKUP C/K
3057983	60974	R2104	PICKUP R/V
3057983	60974	R2104	SUBURBAN (81-)
3057983	60974	R2104	VAN G-SERIE (81-)
3057983	60974	R2104	VAN P-SERIE (81-)
3058768	609691	R2099	PICKUP C/K
3058970	60971	R2092	JIMMY (82-)
3058970	60971	R2092	PICKUP C/K
3058970	60971	R2092	PICKUP R/V
3058970	60971	R2092	SUBURBAN (81-)
3058970	60971	R2092	VAN P-SERIE (81-)
3058989	60970	R2091	JIMMY (82-)
3058989	60970A	R2091	JIMMY (82-)
3058989	60970	R2091	PICKUP R/V
3058989	60970A	R2091	PICKUP R/V
3058989	60970	R2091	SUBURBAN (81-)
3058989	60970A	R2091	SUBURBAN (81-)
3058989	60970	R2091	VAN G-SERIE (81-)
3058989	60970A	R2091	VAN G-SERIE (81-)
3058989	60970	R2091	VAN P-SERIE (81-)
3058989	60970A	R2091	VAN P-SERIE (81-)
3058993	60970	R2091	JIMMY (82-)
3058993	60970A	R2091	JIMMY (82-)
3058993	60970	R2091	PICKUP R/V
3058993	60970A	R2091	PICKUP R/V
3058993	60970	R2091	SUBURBAN (81-)
3058993	60970A	R2091	SUBURBAN (81-)
3058993	60970	R2091	VAN G-SERIE (81-)
3058993	60970A	R2091	VAN G-SERIE (81-)
3058993	60970	R2091	VAN P-SERIE (81-)
3058993	60970A	R2091	VAN P-SERIE (81-)
3058995	60971	R2092	JIMMY (82-)
3058995	60971	R2092	PICKUP C/K
3058995	60971	R2092	PICKUP R/V
3058995	60971	R2092	SUBURBAN (81-)
3058995	60971	R2092	VAN P-SERIE (81-)
52450025	60968A	R2090	JIMMY (82-)
52450025	60968A	R2090	PICKUP S/T
52450025	60968A	R2090	SONOMA (91-)
52450026	60968A	R2090	JIMMY (82-)
52450026	60968A	R2090	PICKUP S/T
52450026	60968A	R2090	SONOMA (91-)
52452682	60968A	R2090	JIMMY (82-)
52452682	60968A	R2090	PICKUP S/T
52452682	60968A	R2090	SONOMA (91-)
52452954	60968A	R2090	JIMMY (82-)
52452954	60968A	R2090	PICKUP S/T
52452954	60968A	R2090	SONOMA (91-)
52457626	60967	R2093	PICKUP C/K
52457627	60967	R2093	PICKUP C/K
52457628	60967	R2093	PICKUP C/K

O.E	Nissens	DRAW.	
(../..) GMC LIGHT VAN			
52457635	60971	R2092	JIMMY (82-)
52457635	60971	R2092	PICKUP C/K
52457635	60971	R2092	PICKUP R/V
52457635	60971	R2092	SUBURBAN (81-)
52457635	60971	R2092	VAN P-SERIE (81-)
52457636	60971	R2092	JIMMY (82-)
52457636	60971	R2092	PICKUP C/K
52457636	60971	R2092	PICKUP R/V
52457636	60971	R2092	SUBURBAN (81-)
52457636	60971	R2092	VAN P-SERIE (81-)
52457637	60971	R2092	JIMMY (82-)
52457637	60971	R2092	PICKUP C/K
52457637	60971	R2092	PICKUP R/V
52457637	60971	R2092	SUBURBAN (81-)
52457637	60971	R2092	VAN P-SERIE (81-)
52457638	60971	R2092	JIMMY (82-)
52457638	60971	R2092	PICKUP C/K
52457638	60971	R2092	PICKUP R/V
52457638	60971	R2092	SUBURBAN (81-)
52457638	60971	R2092	VAN P-SERIE (81-)
52457640	60972	R2096	PICKUP R/V
52457641	60949	R2105	JIMMY (82-)
52457641	60949	R2105	PICKUP C/K
52457641	60949	R2105	PICKUP R/V
52457641	60949	R2105	SUBURBAN (81-)
52457641	60949	R2105	VAN P-SERIE (81-)
52457642	60949	R2105	JIMMY (82-)
52457642	60949	R2105	PICKUP C/K
52457642	60949	R2105	PICKUP R/V
52457642	60949	R2105	SUBURBAN (81-)
52457642	60949	R2105	VAN P-SERIE (81-)
52457643	60949	R2105	JIMMY (82-)
52457643	60949	R2105	PICKUP C/K
52457643	60949	R2105	PICKUP R/V
52457643	60949	R2105	SUBURBAN (81-)
52457643	60949	R2105	VAN P-SERIE (81-)
52457645	60970	R2091	JIMMY (82-)
52457645	60970A	R2091	JIMMY (82-)
52457645	60970	R2091	PICKUP R/V
52457645	60970A	R2091	PICKUP R/V
52457645	60970	R2091	SUBURBAN (81-)
52457645	60970A	R2091	SUBURBAN (81-)
52457645	60970	R2091	VAN G-SERIE (81-)
52457645	60970A	R2091	VAN G-SERIE (81-)
52457645	60970	R2091	VAN P-SERIE (81-)
52457645	60970A	R2091	VAN P-SERIE (81-)
52457646	60970	R2091	JIMMY (82-)
52457646	60970A	R2091	JIMMY (82-)
52457646	60970	R2091	PICKUP R/V
52457646	60970A	R2091	PICKUP R/V
52457646	60970	R2091	SUBURBAN (81-)
52457646	60970A	R2091	SUBURBAN (81-)

CROSS REFERENCE LIST

O.E	Nissens	DRAW.	
(../..) GMC LIGHT VAN			
52457646	60970	R2091	VAN G-SERIE (81-)
52457646	60970A	R2091	VAN G-SERIE (81-)
52457646	60970	R2091	VAN P-SERIE (81-)
52457646	60970A	R2091	VAN P-SERIE (81-)
52457702	60946	R3274	PICKUP C/K
52457702	60946	R3274	SUBURBAN (92-)
52457702	60946A		SUBURBAN (92-)
52457840	60969	R2099	PICKUP C/K
52457840	609691	R2099	PICKUP C/K
52457841	60969	R2099	PICKUP C/K
52457841	609691	R2099	PICKUP C/K
52457842	60969	R2099	PICKUP C/K
52457842	609691	R2099	PICKUP C/K
52457843	60969	R2099	PICKUP C/K
52457843	609691	R2099	PICKUP C/K
52458331	60969	R2099	PICKUP C/K
52458331	609691	R2099	PICKUP C/K
52458334	609691	R2099	PICKUP C/K
52458845	60946	R3274	PICKUP C/K
52458845	60946	R3274	SUBURBAN (92-)
52458845	60946A		SUBURBAN (92-)
52458924	60946	R3274	PICKUP C/K
52458924	60946A		PICKUP C/K
52458924	60946	R3274	SUBURBAN (92-)
52458924	60946A		SUBURBAN (92-)
52458925	60946	R3274	PICKUP C/K
52458925	60946A		PICKUP C/K
52458925	60946	R3274	SUBURBAN (92-)
52458925	60946A		SUBURBAN (92-)
52458927	60946	R3274	PICKUP C/K
52458927	60946A		PICKUP C/K
52458927	60946	R3274	SUBURBAN (92-)
52458927	60946A		SUBURBAN (92-)
52458928	60946	R3274	PICKUP C/K
52458928	60946A		PICKUP C/K
52458928	60946	R3274	SUBURBAN (92-)
52458928	60946A		SUBURBAN (92-)
52458931	60959	R2098	PICKUP C/K
52458932	60959	R2098	PICKUP C/K
52458933	60959	R2098	PICKUP C/K
52458934	60959	R2098	PICKUP C/K
52458935	60959	R2098	PICKUP C/K
52459535	60946	R3274	PICKUP C/K
52459535	60946A		PICKUP C/K
52459535	60946	R3274	SUBURBAN (92-)
52459535	60946A		SUBURBAN (92-)
52459679	60969	R2099	PICKUP C/K
52459679	609691	R2099	PICKUP C/K
52461782	60946	R3274	PICKUP C/K
52461782	60946	R3274	SUBURBAN (92-)
52461782	60946A		SUBURBAN (92-)
52462547	60915A	R2546	ENVOY (94-)

O.E	Nissens	DRAW.	
(../..) GMC LIGHT VAN			
52462547	60915A	R2546	JIMMY (94-)
52462547	60915A	R2546	PICK-UP S10 (94-)
52462547	60915A	R2546	PICK-UP S15 (94-)
52462547	60915A	R2546	PICKUP S/T
52462547	60915A	R2546	SONOMA (94-)
52462548	60915A	R2546	ENVOY (94-)
52462548	60915A	R2546	JIMMY (94-)
52462548	60915A	R2546	PICK-UP S10 (94-)
52462548	60915A	R2546	PICK-UP S15 (94-)
52462548	60915A	R2546	PICKUP S/T
52462548	60915A	R2546	SONOMA (94-)
52465218	60946	R3274	PICKUP C/K
52465218	60946	R3274	SUBURBAN (92-)
52465218	60946A		SUBURBAN (92-)
52465219	60945	R2109	PICKUP C/K
52465219	60945	R2109	SUBURBAN (92-)
52465849	609691	R2099	PICKUP C/K
52465850	609691	R2099	PICKUP C/K
52467213	609691	R2099	PICKUP C/K
52472963	609361	R2439	ENVOY (94-)
52472963	60936A	R2439	ENVOY (94-)
52472963	609361	R2439	JIMMY (94-)
52472963	60936A	R2439	JIMMY (94-)
52472963	609361	R2439	PICK-UP S10 (94-)
52472963	60936A	R2439	PICK-UP S10 (94-)
52472963	609361	R2439	PICK-UP S15 (94-)
52472963	60936A	R2439	PICK-UP S15 (94-)
52472963	609361	R2439	PICKUP S/T
52472963	60936A	R2439	PICKUP S/T
52472963	609361	R2439	SONOMA (94-)
52472963	60936A	R2439	SONOMA (94-)
52481751	60945	R2109	SUBURBAN (92-)
HYUNDAI LIGHT VAN			
25300-43000	67015	R2242	H-100 PORTER (93-)
25300-43350	67490	R2816	STAREX (93-)
25300-43600	67501	R2236	H-100 MINI BUS (93-)
25300-43600	67501	R2236	STAREX (93-)
25300-43610	67501	R2236	H-100 MINI BUS (93-)
25300-43610	67501	R2236	STAREX (93-)
25300-43800	67035	R2599	H-100 MINI BUS (93-)
25300-43810	67034	R2598	H-100 MINI BUS (93-)
25300-43820	67034	R2598	H-100 MINI BUS (93-)
25300-4B000	67499	R2818	H-100 MINI BUS (93-)
25300-4B000	67499	R2818	H-100 PORTER (97-)
25300-4B001	67499	R2818	H-100 PORTER (97-)
25300-4B100	67498	R2817	H-100 PORTER (97-)
25300-4B100	67498	R2817	STAREX (93-)
25310-4A000	67037	R2600	H-200 (97-)
25310-4A000	67037	R2600	H1 (97-)
25310-4A000	67038	R2601	H1 (97-)
25310-4A000	670381	R2601	H1 (97-)

CROSS REFERENCE LIST

O.E	Nissens	DRAW.	
(../..) HYUNDAI LIGHT VAN			
25310-4A050	67038	R2601	H-200 (97-)
25310-4A050	67038	R2601	H1 (97-)
25310-4A050	670381	R2601	H1 (97-)
25310-4A100	67039	R2602	H-200 (97-)
25310-4A100	67039	R2602	H1 (97-)
25310-4A100	670401	R2603	H1 (97-)
25310-4A150	67040	R2603	H-200 (97-)
25310-4A150	67040	R2603	H1 (97-)
25310-4A150	670401	R2603	H1 (97-)
25310-4A600	67041	R2604	H-200 (97-)
25310-4A650	67042	R2605	H-200 (97-)
25310-4B600	67497	R2815	H-100 PORTER (97-)
25310-4B600	67497	R2815	STAREX (93-)
26400-43154	90610	O0296	H-100 PORTER (93-)
26400-43180	90610	O0296	H-100 PORTER (93-)
97023-4A000	77610	H0299	H-200 (97-)
97023-4A000	77610	H0299	H1 (97-)
97023-4A000	77610	H0299	STAREX (93-)
97123-4A000	77618	H0437	STAREX (93-)
97203-4A000	77610	H0299	H-200 (97-)
97203-4A000	77610	H0299	H1 (97-)
97203-4A000	77610	H0299	STAREX (93-)
97211-43010	77608	H0305	H-100 MINI BUS (93-)
97211-43010	77608	H0305	H-100 PORTER (93-)
97211-43030	77611	H0381	H-100 MINI BUS (93-)
97211-43100	77608	H0305	H-100 MINI BUS (93-)
97211-43100	77608	H0305	H-100 PORTER (93-)
97211-4B000	77617	H0454	H-100 PORTER (97-)
97606-4A000	94038	C0393	H-100 MINI BUS (93-)
97606-4A000	94038	C0393	H-100 PORTER (97-)
97606-4A000	94038	C0393	H1 (97-)
97606-4A000	94038	C0393	STAREX (93-)
97606-4A250	94038	C0393	H-100 MINI BUS (93-)
97606-4A250	94038	C0393	H-100 PORTER (97-)
97606-4A250	94038	C0393	H1 (97-)
97606-4A250	94038	C0393	STAREX (93-)
97606-4A251	94038	C0393	H-100 MINI BUS (93-)
97606-4A251	94038	C0393	H-100 PORTER (97-)
97606-4A251	94038	C0393	H1 (97-)
97606-4A251	94038	C0393	STAREX (93-)
HB031400	67018	R2237	GALLOPER (91-)
HB031500	67017	R2248	GALLOPER (91-)
HJ730002/3	94039	C0392	GALLOPER (91-)
HQ172105	67017	R2248	GALLOPER (91-)
HQ172106	67043	R2606	GALLOPER (91-)
HR171401	67046	R2404	GALLOPER (91-)
HR171401	67046	R2404	GALLOPER (98-)
HR171402	67047	R2340	GALLOPER (91-)
HR171501	67046	R2404	GALLOPER (91-)
HR171501	67046	R2404	GALLOPER (98-)
HR171502	67047	R2340	GALLOPER (91-)
HR171512	67046	R2404	GALLOPER (98-)

O.E	Nissens	DRAW.	
KIA LIGHT VAN			
60A-15-200	66622	R2782	K-SERIE (01-)
60B-15-200	66646	R2778	K-SERIE (01-)
OK60A-15-200	66622	R2782	K-SERIE (01-)
OK60A-15200C	66622	R2782	K-SERIE (01-)
OK60A-61010	77526	H0450	K-SERIE (01-)
OK60B-15-200	66646	R2778	K-SERIE (01-)
OK60B-15-200A	66622	R2782	K-SERIE (01-)
OK60H-15-200A	66623	R2783	K-SERIE (01-)
OK62Z-15200B	66622	R2782	K-SERIE (01-)
OK62Z-15200C	66622	R2782	K-SERIE (01-)
OK63K-15200B	66646	R2778	K-SERIE (01-)
OK63K-15200C	66646	R2778	K-SERIE (01-)
OK63K-15200D	66646	R2778	K-SERIE (01-)
LDV (96-) LIGHT VAN			
1618 012	94117	C0237	CONVOY (98-)
1618 013	95027	F0107	CONVOY (98-)
90 353 025	63278A	R1054	CONVOY (98-)
90353026	96895	I0166	CONVOY (98-)
MAZDA LIGHT VAN			
AJ-03-15200	62003	R3096	TRIBUTE (02-)
AJ03-15-200A	62003	R3096	TRIBUTE (02-)
AJ05-15-025F	85278	B0278	TRIBUTE (02-)
AJ06-15-025	85278	B0278	TRIBUTE (02-)
AJ07-15-025	85278	B0278	TRIBUTE (02-)
AM15-15-200A	62461	R2200	B 2600 (84-)
EC-0161-A08	71767	H0389	TRIBUTE (02-)
EC161480A	94731	C0731	TRIBUTE (02-)
F650-15-200	62416	R1253	B 1600 (84-)
F650-15-200	62416	R1253	B 2000 (84-)
F650-15-200	62416	R1253	B 2200 (84-)
G607-15-200 A	62417	R1254	B 2600 (89-)
JE98-15-200C	62436	R2190	MPV LV (95-)
JEA3-15-200B	62435	R2191	MPV LV (95-)
LA01-61-480	94352	C0333	MPV LV52
LA01-61-J10	92053	K0048	MPV LV52
LA05-61-P01	92054	K0049	MPV LV52
LB40-61-J10	92055	K0050	MPV LV (95-)
LB40-61-J10	92055	K0050	MPV LV52
LB40-61-P10	92056	K0051	MPV LV (95-)
LB40-61-P10	92056	K0051	MPV LV52
R226-15-200 A	68130	R3107	B 1600 (84-)
R226-15-200 A	68130	R3107	B 2000 (84-)
R226-15-200 A	68130	R3107	B 2200 (84-)
R226-15-200 B	68130	R3107	B 1600 (84-)
R226-15-200 B	68130	R3107	B 2000 (84-)
R226-15-200 B	68130	R3107	B 2200 (84-)
R226-15-200 C	68130	R3107	B 1600 (84-)
R226-15-200 C	68130	R3107	B 2000 (84-)
R226-15-200 C	68130	R3107	B 2200 (84-)
R2L1-15-200 A	62381	R1921	E 2000 D (87-)

CROSS REFERENCE LIST

O.E	Nissens	DRAW.	
(../..) MAZDA LIGHT VAN			
R2L1-15-200 A	62381	R1921	E 2200 D (87-)
R2M1-15-200 A	62381	R1921	E 2000 D (87-)
R2M1-15-200 A	62381	R1921	E 2200 D (87-)
R2S2-15-200 B	67358	R3261	E 2000 D (99-)
R2S2-15-200 B	67358	R3261	E 2200 D (99-)
R2S2-15-200 C	67358	R3261	E 2000 D (99-)
R2S2-15-200 C	67358	R3261	E 2200 D (99-)
R2S2-15-200 D	67358	R3261	E 2000 D (99-)
R2S2-15-200 D	67358	R3261	E 2200 D (99-)
RF01-15-200 A	62381	R1921	E 2000 D (87-)
RF01-15-200 A	62381	R1921	E 2200 D (87-)
RF01-15-200 C	62381	R1921	E 2000 D (87-)
RF01-15-200 C	62381	R1921	E 2200 D (87-)
RF01-15-200 D	62381	R1921	E 2000 D (87-)
RF01-15-200 D	62381	R1921	E 2200 D (87-)
RF01-15-200 E	62381	R1921	E 2000 D (87-)
RF01-15-200 E	62381	R1921	E 2200 D (87-)
S207-15-200	67358	R3261	E 2000 D (99-)
S207-15-200	67358	R3261	E 2200 D (99-)
VS01-15-200 B	62381	R1921	E 2000 D (87-)
VS01-15-200 B	62381	R1921	E 2200 D (87-)
WL21-15-200A	62246	R3094	B 2500 (96-)
WL21-15-200A	62246A	R3094	B 2500 (96-)
WL21-15-200B	62246	R3094	B 2500 (96-)
WL21-15-200B	62246A	R3094	B 2500 (96-)
YF09-15-200	62004	R3097	TRIBUTE (02-)
YF09-15-200A	62004	R3097	TRIBUTE (02-)
YF10-15-025H	85277	B0277	TRIBUTE (02-)
YF10-15-025J	85277	B0277	TRIBUTE (02-)
YF10-15-025K	85277	B0277	TRIBUTE (02-)
YF10-15200	62004	R3097	TRIBUTE (02-)
YL84-8C607-EL	85277	B0277	TRIBUTE (02-)
YL84-8C607-GH	85278	B0278	TRIBUTE (02-)
ZZM061A10	71766	H0388	B 2500 (96-)
MERCEDES LIGHT VAN			
000 830 98 58	92148	K0171	VITO W 638 (96-)
001 835 76 04	72004	H0223	207 D (77-)
001 835 76 04	72004	H0223	209 D (76-)
001 835 76 04	72004	H0223	307 D (77-)
001 835 76 04	72004	H0223	309 D (68-)
001 835 76 04	72004	H0223	407 D (81-)
001 835 76 04	72004	H0223	409 D (77-)
002 188 25 01	90521	O0012	209 D (76-)
002 188 25 01	90521	O0012	309 D (68-)
002 188 25 01	90521	O0012	409 D (77-)
002 188 26 01	90521	O0012	209 D (76-)
002 188 26 01	90521	O0012	309 D (68-)
002 188 26 01	90521	O0012	409 D (77-)
002 188 30 01	90521	O0012	209 D (76-)
002 188 30 01	90521	O0012	309 D (68-)
002 188 30 01	90521	O0012	409 D (77-)

O.E	Nissens	DRAW.	
(../..) MERCEDES LIGHT VAN			
002 188 31 01	90521	O0012	209 D (76-)
002 188 31 01	90521	O0012	309 D (68-)
002 188 31 01	90521	O0012	409 D (77-)
002 835 48 01	72011	H0328	MB 100 D (88-)
002 835 62 01	72004	H0223	207 D (77-)
002 835 62 01	72004	H0223	209 D (76-)
002 835 62 01	72004	H0223	307 D (77-)
002 835 62 01	72004	H0223	309 D (68-)
002 835 62 01	72004	H0223	407 D (81-)
002 835 62 01	72004	H0223	409 D (77-)
003 835 00 01	72036	H0393	VITO W 638 (96-)
111 180 00 65	90583	O0125	VITO W 638 (96-)
168 500 00 00	96782	I0190	VANEO (02-)
168 500 02 93	85078	B0078	VANEO (02-)
168 500 08 54	94588	C0588	VANEO (02-)
168 500 11 02	62781A	R2399	VANEO (02-)
168 500 11 54	94588	C0588	VANEO (02-)
168 500 12 02	62781A	R2399	VANEO (02-)
168 500 13 02	62781A	R2399	VANEO (02-)
168 500 15 02	62781A	R2399	VANEO (02-)
168 500 16 02	62781A	R2399	VANEO (02-)
168 500 17 02	62781A	R2399	VANEO (02-)
309 500 65 02	62630	R0152	309 (68-)
310 500 00 02	62630	R0152	309 (68-)
414 500 00 54	94613	C0613	VANEO (02-)
414 830 00 58	95328	F0256	VANEO (02-)
414 830 08 58	95328	F0256	VANEO (02-)
601 180 00 65	90618	O0288	VITO W 638 (96-)
601 188 93 01	90521	O0012	209 D (76-)
601 188 93 01	90521	O0012	309 D (68-)
601 188 93 01	90521	O0012	409 D (77-)
601 500 06 03	62581	R1153	207 D (77-)
601 500 06 03	62581	R1153	307 D (77-)
601 500 06 03	62581	R1153	407 D (81-)
601 500 06 03	62581	R1153	409 D (77-)
601 500 08 03	62581	R1153	207 D (77-)
601 500 08 03	62581	R1153	307 D (77-)
601 500 08 03	62581	R1153	407 D (81-)
601 500 08 03	62581	R1153	409 D (77-)
601 500 26 03	62581	R1153	207 D (77-)
601 500 26 03	62581	R1153	307 D (77-)
601 500 26 03	62581	R1153	407 D (81-)
601 500 26 03	62581	R1153	409 D (77-)
601 500 29 03	62581	R1153	207 D (77-)
601 500 29 03	62581	R1153	307 D (77-)
601 500 29 03	62581	R1153	407 D (81-)
601 500 29 03	62581	R1153	409 D (77-)
601 500 30 03	62581	R1153	207 D (77-)
601 500 30 03	62581	R1153	307 D (77-)
601 500 30 03	62581	R1153	407 D (81-)
601 500 30 03	62581	R1153	409 D (77-)
601 500 51 03	62633	R0412	207 D (77-)

CROSS REFERENCE LIST

(../..) MERCEDES LIGHT VAN

O.E	Nissens	DRAW.	
601 500 51 03	62633	R0412	209 D (76-)
601 500 51 03	62633	R0412	307 D (77-)
601 500 55 03	62632	R0456	207 D (77-)
601 500 55 03	62632	R0456	209 D (76-)
601 500 55 03	62632	R0456	307 D (77-)
601 500 55 03	62632	R0456	309 D (68-)
601 500 55 03	62632	R0456	407 D (81-)
601 500 55 03	62632	R0456	409 D (77-)
601 500 65 03	62635	R1643	207 D (77-)
601 500 65 03	62635	R1643	209 D (76-)
601 500 65 03	62635	R1643	307 D (77-)
601 500 65 03	62635	R1643	309 D (68-)
601 500 65 03	62635	R1643	407 D (81-)
601 500 65 03	62635	R1643	409 D (77-)
601 500 67 03	62581	R1153	207 D (77-)
601 500 67 03	62581	R1153	307 D (77-)
601 500 67 03	62581	R1153	407 D (81-)
601 500 67 03	62581	R1153	409 D (77-)
601 500 68 03	62633	R0412	207 D (77-)
601 500 68 03	62633	R0412	209 D (76-)
601 500 68 03	62633	R0412	307 D (77-)
601 500 68 03	62633	R0412	309 D (68-)
601 500 68 03	62633	R0412	407 D (81-)
601 500 68 03	62633	R0412	409 D (77-)
601 500 69 03	62633	R0412	207 D (77-)
601 500 69 03	62633	R0412	209 D (76-)
601 500 69 03	62633	R0412	307 D (77-)
601 500 70 03	62635	R1643	207 D (77-)
601 500 70 03	62635	R1643	209 D (76-)
601 500 70 03	62635	R1643	307 D (77-)
601 500 70 03	62635	R1643	309 D (68-)
601 500 70 03	62635	R1643	407 D (81-)
601 500 70 03	62635	R1643	409 D (77-)
601 500 75 03	62635	R1643	207 D (77-)
601 500 75 03	62635	R1643	209 D (76-)
601 500 75 03	62635	R1643	307 D (77-)
601 500 75 03	62635	R1643	309 D (68-)
601 500 75 03	62635	R1643	407 D (81-)
601 500 75 03	62635	R1643	409 D (77-)
601 500 78 03	62635	R1643	207 D (77-)
601 500 78 03	62635	R1643	209 D (76-)
601 500 78 03	62635	R1643	307 D (77-)
601 500 78 03	62635	R1643	309 D (68-)
601 500 78 03	62635	R1643	407 D (81-)
601 500 78 03	62635	R1643	409 D (77-)
601 500 81 03	62635	R1643	207 D (77-)
601 500 81 03	62635	R1643	209 D (76-)
601 500 81 03	62635	R1643	307 D (77-)
601 500 81 03	62635	R1643	309 D (68-)
601 500 81 03	62635	R1643	407 D (81-)
601 500 81 03	62635	R1643	409 D (77-)
601 500 82 03	62632	R0456	207 D (77-)

(../..) MERCEDES LIGHT VAN

O.E	Nissens	DRAW.	
601 500 84 03	62635	R1643	207 D (77-)
601 500 84 03	62635	R1643	209 D (76-)
601 500 84 03	62635	R1643	307 D (77-)
601 500 84 03	62635	R1643	309 D (68-)
601 500 84 03	62635	R1643	407 D (81-)
601 500 84 03	62635	R1643	409 D (77-)
611 188 03 01	90622	O0317	VITO W 638 (96-)
612 188 01 01	90622	O0317	VITO W 638 (96-)
617 180 00 65	90519	O0002	209 D (76-)
617 180 00 65	90519	O0002	309 D (68-)
617 180 00 65	90519	O0002	409 D (77-)
631 500 05 02	62516	R0708	MB 100 D (88-)
631 500 07 02	62516	R0708	MB 100 D (88-)
638 500 11 93	85403	B0403	VITO W 638 (96-)
638 501 16 01	62678	R1827	VITO W 638 (96-)
638 501 19 01	62677	R1845	VITO W 638 (96-)
638 501 20 01	62677	R1845	VITO W 638 (96-)
638 501 21 01	62655	R2741	VITO W 638 (96-)
638 501 22 01	62655	R2741	VITO W 638 (96-)
638 501 23 01	96843	I0098	VITO W 638 (96-)
638 501 27 01	62559	R2744	VITO W 638 (96-)
638 501 28 01	62561	R2745	VITO W 638 (96-)
638 501 29 01	96894	I0308	VITO W 638 (96-)
638 501 30 01	62562	R2886	VITO W 638 (96-)
638 501 33 01	62573	R3156	VITO W 638 (96-)
638 501 34 01	62574	R3192	VITO W 638 (96-)
638 501 35 01	62575	R3155	VITO W 638 (96-)
638 835 01 70	94226	C0236	VITO W 638 (96-)
639 501 02 01	96730	I0353	VIANO W 639 (03-)
639 501 02 01	96730	I0353	VITO W 639 (03-)
639 501 03 01	96729	I0354	VIANO W 639 (03-)
639 501 03 01	96729	I0354	VITO W 639 (03-)
639 501 04 01	62572	R3168	VIANO W 639 (03-)
639 501 04 01	62572	R3168	VITO W 639 (03-)
639 835 00 70	94674	C0674	VIANO W 639 (03-)
639 835 00 70	94674	C0674	VITO W 639 (03-)
639 835 05 47	95358	F0289	VIANO W 639 (03-)
639 835 05 47	95358	F0289	VITO W 639 (03-)
646 188 03 01	90622	O0317	VITO W 638 (96-)
901 500 04 54	94225	C0204	SPRINTER (95-)
901 500 05 54	94225	C0204	SPRINTER (95-)
901 500 18 00	62687A	R1615	SPRINTER (95-)
901 500 24 00	62685A	R1617	SPRINTER (95-)
901 500 28 00	62685A	R1617	SPRINTER (95-)
901 500 31 00	62664A	R2047	SPRINTER (95-)
901 500 33 00	62685A	R1617	SPRINTER (95-)
901 500 34 00	62686A	R1616	SPRINTER (95-)
901 500 35 00	62519A	R2884	SPRINTER (95-)
901 500 38 00	62597A	R2891	SPRINTER (95-)
901 500 39 00	62519A	R2884	SPRINTER (95-)
901 501 07 01	96842	I0095	SPRINTER (95-)
901 550 00 80	95229	F0093	VITO W 638 (96-)

CROSS REFERENCE LIST

O.E	Nissens	DRAW.	
(../..) MERCEDES LIGHT VAN			
901 550 01 80	95230	F0094	SPRINTER (95-)
MITSUBISHI LIGHT VAN			
MB127772	67501	R2236	L 300 (86-)
MB221901	62842	R1522	PAJERO (82-)
MB222043	62815	R0375	L 200 (83-)
MB222054	62828	R1162	L 300 (80-)
MB222442	62815	R0375	L 200 (83-)
MB356155	62840	R1255	PAJERO (82-)
MB356156	62882	R1618	PAJERO (82-)
MB356340	67501	R2236	L 300 (86-)
MB356341	67501	R2236	L 300 (86-)
MB356342	67501	R2236	L 300 (86-)
MB356378	67501	R2236	L 300 (86-)
MB356390	68156	R3127	L 200 (87-)
MB356391	68156	R3127	L 200 (87-)
MB356681	62856	R1831	L 200 (87-)
MB356862	62856	R1831	L 200 (87-)
MB390160	62807	R2975	CANTER (86-)
MB390161	62807	R2975	CANTER (86-)
MB538805	62884	R2969	PAJERO (82-)
MB605252	67501	R2236	L 300 (86-)
MB657375	94703	C0703	PAJERO (90-)
MB657375	94703	C0703	SHOGUN (90-)
MB657376	94703	C0703	PAJERO (90-)
MB657376	94703	C0703	SHOGUN (90-)
MB657527	95065	F0015	PAJERO (90-)
MB657527	95065	F0015	SHOGUN (90-)
MB660076	62884	R2969	PAJERO (82-)
MB660076	62884	R2969	PAJERO (90-)
MB660076	62884	R2969	SHOGUN (90-)
MB660077	62884	R2969	PAJERO (90-)
MB660077	62884	R2969	SHOGUN (90-)
MB660078	68157	R3126	PAJERO (90-)
MB660078	68157	R3126	SHOGUN (90-)
MB660079	68157	R3126	PAJERO (90-)
MB660079	68157	R3126	SHOGUN (90-)
MB890954	62852	R1986	PAJERO (90-)
MB890954	62852	R1986	SHOGUN (90-)
MB890955	62853	R1987	PAJERO (90-)
MB890955	62853	R1987	SHOGUN (90-)
MB890956	62801	R3063	PAJERO (90-)
MB890956	62801	R3063	SHOGUN (90-)
MB890957	62802	R3064	PAJERO (90-)
MB890957	62802	R3064	SHOGUN (90-)
MB899497	95065	F0015	PAJERO (90-)
MB899497	95065	F0015	SHOGUN (90-)
MB918436	94784	C0784	PAJERO (90-)
MB918436	94784	C0784	SHOGUN (90-)
MB918437	94784	C0784	PAJERO (90-)
MB918437	94784	C0784	SHOGUN (90-)
MB918516	95046	F0178	PAJERO (90-)

O.E	Nissens	DRAW.	
(../..) MITSUBISHI LIGHT VAN			
MB918516	95046	F0178	SHOGUN (90-)
MB918517	95046	F0178	PAJERO (90-)
MB918517	95046	F0178	SHOGUN (90-)
MB924486	68157	R3126	PAJERO (90-)
MB924486	68157	R3126	SHOGUN (90-)
MB924487	68157	R3126	PAJERO (90-)
MB924487	68157	R3126	SHOGUN (90-)
MB946630	94493	C0498	L 300 (86-)
MR 239626	68154	R3255	MONTERO SPORT (98-)
MR 239626	68154	R3255	PAJERO SPORT (98-)
MR 239627	68154	R3255	MONTERO SPORT (98-)
MR 239627	68154	R3255	PAJERO SPORT (98-)
MR 258668	68155	R3209	MONTERO SPORT (98-)
MR 258668	68155	R3209	PAJERO SPORT (98-)
MR 360415	94790	C0790	MONTERO SPORT (98-)
MR 360415	94790	C0790	PAJERO SPORT (98-)
MR117391	94749	C0749	PAJERO (90-)
MR117391	94749	C0749	SHOGUN (90-)
MR127853	62809	R2947	L 200 (96-)
MR258669	68155	R3209	MONTERO SPORT (98-)
MR258669	68155	R3209	PAJERO SPORT (98-)
MR281023	62892	R3183	L 200 (96-)
MR312899	85276	B0276	OUTLANDER (03-)
MR360801	85383	B0383	MONTERO (00-)
MR360801	85383	B0383	PAJERO (00-)
MR360801	85383	B0383	SHOGUN (00-)
MR373172	68158	R3121	PAJERO PININ (99-)
MR431239	68158	R3121	PAJERO PININ (99-)
MR464708	85276	B0276	OUTLANDER (03-)
MR513487	85384	B0384	MONTERO SPORT (98-)
MR513487	85384	B0384	PAJERO SPORT (98-)
MR571147	62895	R3090	L 200 (96-)
MR571147	62895A	R3282	L 200 (96-)
MR958656	94493	C0498	L 300 (86-)
MR993392	85276	B0276	OUTLANDER (03-)
MR993393	85276	B0276	OUTLANDER (03-)
MR993931	85276	B0276	OUTLANDER (03-)
NISSAN LIGHT VAN			
110.673.3F	95291	F0209	PATROL (79-)
121005220	62898	R3252	TRADE (85-)
14496-00QAA	96762	I0342	PRIMASTAR (02-)
1956440	94501	C0506	TERRANO (96-)
1961970	94501	C0506	TERRANO (96-)
21400 00QAK	63819	R2918	INTERSTAR (02-)
21400-00QAN	63026	R2700	PRIMASTAR (02-)
21400-00QAS	63025A	R2699	PRIMASTAR (02-)
21400-01G00	62929	R1082	KING CAB D21 (85-)
21400-01G00	62929	R1082	PICK UP D21 (85-)
21400-01G00	62929	R1082	TERRANO (86-)
21400-01G00	62929	R1082	TERRANO (87-)
21400-01G10	62929	R1082	KING CAB D21 (85-)

CROSS REFERENCE LIST

O.E	Nissens	DRAW.	
(../..) NISSAN LIGHT VAN			
21400-01G10	62929	R1082	PICK UP D21 (85-)
21400-09G11	62986	R1770	TERRANO (86-)
21400-10G00	67353	R3200	KING CAB D21 (85-)
21400-10G00	67353	R3200	PICK UP D21 (85-)
21400-10G00	67353	R3200	TERRANO (87-)
21400-10G10	62988	R1830	KING CAB D21 (85-)
21400-10G10	62988	R1830	PICK UP D21 (85-)
21400-15G00	62929	R1082	TERRANO (86-)
21400-18W10	62934	R0587	KING CAB 720 (82-)
21400-18W10	62934	R0587	PICK UP 720 (82-)
21400-20J00	67327	R2437	PATROL Y60 (88-)
21400-32W00	62931	R0377	KING CAB 720 (82-)
21400-32W00	62931	R0377	PICK UP 720 (82-)
21400-36W00	62930	R0378	KING CAB 720 (82-)
21400-36W00	62930	R0378	PICK UP 720 (82-)
21400-7C700	62976A	R2335	VANETTE CARGO (95-)
21400-93G00	67353	R3200	TERRANO (87-)
21400-9X202	62906	R2903	ATLEON (97-)
21400-9X202	62906	R2903	ECO (97-)
21400-C6400	62910	R2160	PATROL (79-)
21400-D6300	62904	R2902	ATLEON (97-)
21400-D6300	62904	R2902	ECO (97-)
21400-D6400	62903	R2901	ATLEON (97-)
21400-D6400	62903	R2901	ECO (97-)
21400-G9600	62910	R2160	PATROL (79-)
21400-G9605	62911	R2161	PATROL (79-)
21400-G9800	62912	R2162	PATROL Y60 (88-)
21400-G9801	62913	R2163	PATROL Y60 (88-)
21400-G9802	62959	R1794	PATROL Y60 (88-)
21400-G9806	62958	R1518	PATROL Y60 (88-)
21400-Y9506	62422	R0871	VANETTE (86-)
21400-Y9601	62419	R1175	VANETTE (86-)
21410-0F121	62069A	R2819	TERRANO (93-)
21410-0F521	62070A	R2731	TERRANO (93-)
21410-0W510	62916	R2075	PATHFINDER (97-)
21410-0W517	62916	R2075	PATHFINDER (97-)
21410-2S710	67356	R3091	KING CAB D22 (98-)
21410-2S710	67356	R3091	PICK UP D22 (98-)
21410-2S910	67357	R3295	KING CAB D22 (98-)
21410-2S910	67357	R3295	PICK UP D22 (98-)
21410-2X800	68707A	R3139	TERRANO (02-)
21410-2X900	68706A	R3138	TERRANO (02-)
21410-7C002	62976A	R2335	VANETTE CARGO (95-)
21410-7C003	62921A	R2278	VANETTE CARGO (95-)
21410-7F000	68708A	R3140	TERRANO (96-)
21410-7F000	68708A	R3140	TERRANO (02-)
21410-8H800	68703A	R3142	X-TRAIL T30 (01-)
21410-8H900	68705A	R3137	X-TRAIL T30 (01-)
21410-9C001	62908A	R2941	VANETTE (92-)
21410-9C002	62908A	R2941	VANETTE (92-)
21410-9C004	62922	R2274	VANETTE (92-)
21410-9C004	62983A	R2272	VANETTE (92-)

O.E	Nissens	DRAW.	
(../..) NISSAN LIGHT VAN			
21410-9C100	62983A	R2272	VANETTE (92-)
21410-9C101	62908A	R2941	VANETTE (92-)
21410-9C600	62921A	R2278	VANETTE CARGO (95-)
21410-9C602	62976A	R2335	VANETTE CARGO (95-)
21410-AX600	62902A	R2991	NOTE (06-)
21410-G5501	62950	R1218	VANETTE (86-)
21410-G5520	62950	R1218	VANETTE (86-)
21410-G9604	62915	R2165	PATROL (79-)
21410-VB200	67354A	R2984	PATROL Y61 (97-)
21410-VB200	67354A	R2984	SAFARI Y61 (97-)
21410-VB300	67354A	R2984	PATROL Y61 (97-)
21410-VB300	67354A	R2984	SAFARI Y61 (97-)
21410-VB301	67354A	R2984	PATROL Y61 (97-)
21410-VB301	67354A	R2984	SAFARI Y61 (97-)
21410-VB800	62953A	R1397	PATROL Y61 (97-)
21410-Y9504	62899	R3066	VANETTE (86-)
21450-7F001	68709A	R3141	TERRANO (96-)
21450-7F001	68709A	R3141	TERRANO (02-)
21460-0W001	62916	R2075	PATHFINDER (97-)
21460-0W510	62916	R2075	PATHFINDER (97-)
21460-0W517	62916	R2075	PATHFINDER (97-)
21460-4W007	68715	R3288	PATHFINDER (97-)
21460-4W017	68715	R3288	PATHFINDER (97-)
21460-AX800	68700A	R3112	NOTE (06-)
21460-VB200	67354A	R2984	PATROL Y61 (97-)
21460-VB200	67354A	R2984	SAFARI Y61 (97-)
21460-VB300	62953A	R1397	PATROL Y61 (97-)
21460-VB300	62953A	R1397	SAFARI Y61 (97-)
21460-VB800	62953A	R1397	PATROL Y61 (97-)
21481-7C000	85479	B0479	VANETTE CARGO (95-)
21481-7C001	85479	B0479	VANETTE CARGO (95-)
21481-8C000	85479	B0479	VANETTE CARGO (95-)
21481-8C300	85480	B0480	VANETTE CARGO (95-)
21481-8H303	85279	B0279	X-TRAIL T30 (01-)
21481-8H310	85279	B0279	X-TRAIL T30 (01-)
21481-9C001	85480	B0480	VANETTE CARGO (95-)
21481-9C002	85480	B0480	VANETTE CARGO (95-)
21481-9C003	85480	B0480	VANETTE CARGO (95-)
21481-9C004	85480	B0480	VANETTE CARGO (95-)
21481-9C005	85480	B0480	VANETTE CARGO (95-)
21481-9C600	85479	B0479	VANETTE CARGO (95-)
27140-61J15	72200	H0165	PATROL Y61 (97-)
27140-61J15	72200	H0165	SAFARI Y61 (97-)
27140-7F001	72050	H0271	TERRANO (93-)
27140-7F001	72050	H0271	TERRANO (96-)
27140-7F001	72050	H0271	TERRANO (02-)
27140-7F001	72050	H0271	VANETTE CARGO (95-)
27140-9C002	72050	H0271	VANETTE (92-)
27280-59G05	92084	K0074	KING CAB D21 (85-)
27280-59G05	92084	K0074	PICK UP D21 (85-)
27280-59G05	92084	K0074	TERRANO (86-)
27280-59G05	92084	K0074	TERRANO (87-)

CROSS REFERENCE LIST

O.E	Nissens	DRAW.	
(../..) NISSAN LIGHT VAN			
27280-OF000	92084	K0074	TERRANO (93-)
27650-00QAH	94672	C0672	PRIMASTAR (02-)
4403 216	63812A	R2463	INTERSTAR (02-)
4403216	63812A	R2463	INTERSTAR (02-)
704314	95291	F0209	PATROL (79-)
77 00 428 082	637931	R2668	KUBISTAR (03-)
77 00 430 784	63808	R2637	KUBISTAR (03-)
77 00 430 784	638081	R2637	KUBISTAR (03-)
77 01 045 216	85253	B0253	KUBISTAR (03-)
77 01 046 627	85253	B0253	KUBISTAR (03-)
77 01 049 664	63812A	R2463	INTERSTAR (02-)
77 01 049 665	94660	C0660	INTERSTAR (02-)
77 01 050 677	85253	B0253	KUBISTAR (03-)
790.310.050F	95292	F0210	VANETTE (86-)
92101-G9800	94383	C0406	PATROL (79-)
92101-G9800	94383	C0406	PATROL Y60 (88-)
92110-01G61	94024	C0315	KING CAB D21 (85-)
92110-01G61	94024	C0315	PICK UP D21 (85-)
92110-01G61	94024	C0315	TERRANO (86-)
92110-01G61	94024	C0315	TERRANO (87-)
92110-0W002	94500	C0505	PATHFINDER (97-)
92110-0W712	94500	C0505	PATHFINDER (97-)
92110-2W100	94500	C0505	PATHFINDER (97-)
92110-2W101	94500	C0505	PATHFINDER (97-)
92110-2W110	94500	C0505	PATHFINDER (97-)
92110-3S401	94759	C0759	KING CAB D22 (98-)
92110-3S401	94759	C0759	PICK UP D22 (98-)
92110-7F000	94501	C0506	TERRANO (93-)
92110-7F000	94501	C0506	TERRANO (96-)
92110-7F700	94501	C0506	TERRANO (93-)
92110-7F700	94501	C0506	TERRANO (96-)
92110-8C802	94786	C0786	VANETTE CARGO (95-)
92110-9X400	94836	C0836	ATLEON (97-)
92110-9X400	94836	C0836	ECO (97-)
92110-VJ200	94759	C0759	KING CAB D22 (98-)
92110-VJ200	94759	C0759	PICK UP D22 (98-)
OLDSMOBILE LIGHT VAN			
10312887	85409	B0409	SILHOUETTE (97-)
10326292	94797	C0797	SILHOUETTE (97-)
10339103	94797	C0797	SILHOUETTE (97-)
10427834	85409	B0409	SILHOUETTE (97-)
10427835	85409	B0409	SILHOUETTE (97-)
10427836	85409	B0409	SILHOUETTE (97-)
10427837	85409	B0409	SILHOUETTE (97-)
10427858	85409	B0409	SILHOUETTE (97-)
10430003	94797	C0797	SILHOUETTE (97-)
12362508	85408	B0408	SILHOUETTE (97-)
12365300	85408	B0408	SILHOUETTE (97-)
12367289	85408	B0408	SILHOUETTE (97-)
12367291	85408	B0408	SILHOUETTE (97-)
12368622	85408	B0408	SILHOUETTE (97-)

O.E	Nissens	DRAW.	
(../..) OLDSMOBILE LIGHT VAN			
12368634	85408	B0408	SILHOUETTE (97-)
22136414	85408	B0408	SILHOUETTE (97-)
52450025	60968A	R2090	BRAVADA
52450026	60968A	R2090	BRAVADA
52451292	60962	R2094	SILHOUETTE (89-)
52451293	60962	R2094	SILHOUETTE (89-)
52452672	60962	R2094	SILHOUETTE (89-)
52452673	60962	R2094	SILHOUETTE (89-)
52452682	60968A	R2090	BRAVADA
52452954	60968A	R2090	BRAVADA
52453114	94393	C0439	SILHOUETTE (89-)
52453959	94393	C0439	SILHOUETTE (89-)
52461229	94394	C0440	SILHOUETTE (89-)
52462547	60915A	R2546	BRAVADA
52462548	60915A	R2546	BRAVADA
52472963	609361	R2439	BRAVADA
52472963	60936A	R2439	BRAVADA
52477222	60962	R2094	SILHOUETTE (89-)
52477673	94843	C0843	SILHOUETTE (97-)
52486810	94843	C0843	SILHOUETTE (97-)
OPEL LIGHT VAN			
09196705	96898	I0167	COMBO (00-)
1300 119	63244	R1528	FRONTERA A (92-)
1300 120	63244	R1528	FRONTERA A (92-)
1300 121	63245	R1756	FRONTERA A (92-)
1300 136	63002	R2317	MONTEREY (91-)
1300 138	63002	R2317	MONTEREY (91-)
1300 149	632851	R1418	COMBO (93-)
1300 149	63285A	R1418	COMBO (93-)
1300 151	63286	R1396	COMBO (93-)
1300 152	63254A	R2212	COMBO (93-)
1300 152	632921	R2206	COMBO (93-)
1300 157	63037	R3151	FRONTERA A (92-)
1300 233	63009A	R2423	COMBO (00-)
1300 236	63007A	R2448	COMBO (00-)
1300 237	63008A	R2449	COMBO (00-)
1300 259	63094	R3144	COMBO (00-)
1302 058	63244	R1528	FRONTERA A (92-)
1302 113	96898	I0167	COMBO (00-)
1312957	85446	B0446	FRONTERA B (98-)
1314 442	85196	B0196	COMBO (00-)
1314 447	85190	B0190	COMBO (00-)
1314 518	85192	B0192	COMBO (93-)
1314 519	85193	B0193	COMBO (93-)
1314 521	85005	B0005	COMBO (93-)
1314 534	85193	B0193	COMBO (93-)
1340 507	85424	B0424	FRONTERA A (92-)
1341 219	85193	B0193	COMBO (93-)
1341 244	85192	B0192	COMBO (93-)
1341 258	85005	B0005	COMBO (93-)
1341 307	85005	B0005	COMBO (93-)

CROSS REFERENCE LIST

O.E	Nissens	DRAW.	
(../..) OPEL LIGHT VAN			
1341 321	85192	B0192	COMBO (93-)
1341 331	85196	B0196	COMBO (00-)
1341 332	85197	B0197	COMBO (00-)
1341 334	85190	B0190	COMBO (00-)
1341328	85446	B0446	FRONTERA B (98-)
1341329	85446	B0446	FRONTERA B (98-)
1618 016	94228	C0239	COMBO (93-)
1618 016	95057	F0106	COMBO (93-)
1618 017	92151	K0137	COMBO (93-)
1618 020	72634	H0260	COMBO (93-)
1618 046	94228	C0239	COMBO (93-)
1618 092	92150	K0136	COMBO (93-)
1618 222	72661	H0071	COMBO (00-)
1800 067	72999	H0350	FRONTERA A (92-)
1800 069	72999	H0350	FRONTERA A (92-)
1806 105	72664	H0415	FRONTERA B (98-)
1806 125	72659	H0270	FRONTERA A (92-)
1848 000	95321	F0232	COMBO (00-)
1848 027	95029	F0109	FRONTERA A (92-)
1850 000	94546	C0548	COMBO (00-)
1850 026	94819	C0819	FRONTERA A (92-)
1850 031	94686	C0686	FRONTERA B (98-)
1850 051	94228	C0239	COMBO (93-)
1850 072	94547	C0549	COMBO (00-)
1850 089	94548	C0594	COMBO (00-)
1850 091	94546	C0548	COMBO (00-)
1850 092	94721	C0721	COMBO (00-)
1850 093	94722	C0722	COMBO (00-)
1850 114	94721	C0721	COMBO (00-)
24427069	96898	I0167	COMBO (00-)
4400908	94325	C0301	ARENA (98-)
4400908	94325	C0301	MOVANO (98-)
4401424	94326	C0302	ARENA (98-)
4401424	94326	C0302	MOVANO (98-)
4402604	85244	B0244	ARENA (98-)
4402604	85245	B0245	ARENA (98-)
4402604	85244	B0244	MOVANO (98-)
4403 216	63812A	R2463	ARENA (98-)
4403 216	63812A	R2463	MOVANO (98-)
4403 238	94660	C0660	ARENA (98-)
4403 238	94660	C0660	MOVANO (98-)
4403216	63812A	R2463	ARENA (98-)
4403216	63812A	R2463	MOVANO (98-)
4403573	85244	B0244	ARENA (98-)
4403573	85244	B0244	MOVANO (98-)
4408078	96762	I0342	VIVARO (01-)
4408429	94671	C0671	VIVARO (01-)
4408645	63025A	R2699	VIVARO (01-)
4408646	94671	C0671	VIVARO (01-)
4411898	96775	I0379	VIVARO (01-)
4412816	63818	R2917	VIVARO (01-)
4412817	63817	R2916	VIVARO (01-)

O.E	Nissens	DRAW.	
(../..) OPEL LIGHT VAN			
4414 943	85244	B0244	MOVANO (98-)
4414161	63026	R2700	VIVARO (01-)
4414387	94672	C0672	VIVARO (01-)
4414578	63817	R2916	VIVARO (01-)
4414580	94678	C0678	VIVARO (01-)
4414691	63026	R2700	VIVARO (01-)
4414943	85245	B0245	MOVANO (98-)
4415 068	63819	R2918	MOVANO (98-)
4415 731	85244	B0244	MOVANO (98-)
4415071	94659	C0659	ARENA (98-)
4415071	94659	C0659	MOVANO (98-)
4415074	96767	I0343	ARENA (98-)
4415074	96767	I0343	MOVANO (98-)
4417578	63817	R2916	VIVARO (01-)
4417579	63818	R2917	VIVARO (01-)
4500847	96890	I0060	ARENA (98-)
4500847	96890	I0060	MOVANO (98-)
4500849	85244	B0244	ARENA (98-)
4500849	85244	B0244	MOVANO (98-)
4501134	85245	B0245	ARENA (98-)
4501134	85245	B0245	MOVANO (98-)
4501137	63936A	R2122	ARENA (98-)
4501137	63936A	R2122	MOVANO (98-)
4501165	73375	H0265	ARENA (98-)
4501165	73375	H0265	MOVANO (98-)
6302 020	63299	R2372	FRONTERA A (92-)
6341 164	85197	B0197	COMBO (00-)
6845612	92187	K0178	COMBO (00-)
77 01 049 664	63812A	R2463	ARENA (98-)
77 01 049 664	63812A	R2463	MOVANO (98-)
77 01 049 665	94660	C0660	ARENA (98-)
77 01 049 665	94660	C0660	MOVANO (98-)
90486845	94228	C0239	COMBO (93-)
90486845	95057	F0106	COMBO (93-)
91126415	72999	H0350	FRONTERA A (92-)
91146914	63245	R1756	FRONTERA A (92-)
91146915	63244	R1528	FRONTERA A (92-)
91147724	63244	R1528	FRONTERA A (92-)
91149885	63037	R3151	FRONTERA A (92-)
91151482	72659	H0270	FRONTERA A (92-)
91153279	63299	R2372	FRONTERA A (92-)
91155593	72999	H0350	FRONTERA A (92-)
91166000	63026	R2700	VIVARO (01-)
91168643	94672	C0672	VIVARO (01-)
9196705	96898	I0167	COMBO (00-)
9201959	94546	C0548	COMBO (00-)
93177215	94721	C0721	COMBO (00-)
93177424	63094	R3144	COMBO (00-)
97036935	63002	R2317	MONTEREY (91-)
97046488	92147	K0130	FRONTERA A (92-)

CROSS REFERENCE LIST

PEUGEOT LIGHT VAN

O.E	Nissens	DRAW.	
0384.E4	96889	I0142	BOXER (94-)
0384.E4	96889	I0142	BOXER (02-)
0384.E7	96849	I0107	E7 - EUROCAB
0384.E7	96849	I0107	EXPERT (95-)
0384.F6	96790	I0340	PARTNER (02-)
1103.E8	90604	0000	BOXER (94-)
1250.E9	85074	B0074	PARTNER (96-)
1250.F1	85083	B0083	PARTNER (96-)
1253.41	85004	B0004	EXPERT (95-)
1253.42	85006	B0006	E7 - EUROCAB
1253.42	85004	B0004	EXPERT (95-)
1253.42	85006	B0006	EXPERT (95-)
1253.45	85003	B0003	EXPERT (95-)
1253.47	85006	B0006	E7 - EUROCAB
1253.47	85006	B0006	EXPERT (95-)
1253.51	85317	B0317	PARTNER (96-)
1253.63	85318	B0318	PARTNER (96-)
1253.87	85084	B0085	PARTNER (96-)
1253.A7	85316	B0316	PARTNER (02-)
1254.68	85317	B0317	PARTNER (96-)
1254.69	85006	B0006	E7 - EUROCAB
1254.69	85004	B0004	EXPERT (95-)
1254.69	85006	B0006	EXPERT (95-)
1254.70	85003	B0003	EXPERT (95-)
1254.70	85318	B0318	PARTNER (96-)
1254.71	85006	B0006	E7 - EUROCAB
1254.71	85004	B0004	EXPERT (95-)
1254.71	85006	B0006	EXPERT (95-)
1254.74	85074	B0074	PARTNER (96-)
1254.74	85083	B0083	PARTNER (96-)
1254.85	85084	B0085	PARTNER (96-)
1300.C1	63562	R1050	J7 (70-)
1300.C1	63562	R1050	J7 (78-)
1300.C1	63562	R1050	J9 (70-)
1300.C1	63562	R1050	J9 (78-)
1300.F7	63572	R0776	J5 (81-)
1300.F8	63572	R0776	J5 (81-)
1300.G0	63561	R0774	J5 (81-)
1300.J9	63557	R0354	J5 (81-)
1300.K1	63561	R0774	J5 (81-)
1300.K3	63558	R0359	J5 (81-)
1301.JK	61862	R1427	BOXER (94-)
1301.N0	61390A	R1294	BOXER (94-)
1301.N2	61390A	R1294	BOXER (94-)
1301.N3	61390A	R1294	BOXER (94-)
1301.N6	61393	R1435	BOXER (94-)
1301.P1	61396	R1431	EXPERT (95-)
1301.P3	61875A	R1606	EXPERT (95-)
1301.P6	61390A	R1294	BOXER (94-)
1301.Y4	61875A	R1606	EXPERT (95-)
1301.Y7	61875A	R1606	EXPERT (95-)
1301.Z0	61875A	R1606	EXPERT (95-)

(../..) PEUGEOT LIGHT VAN

O.E	Nissens	DRAW.	
1305.51	63561	R0774	J5 (81-)
1305199080	85021	B0021	BOXER (02-)
1305559080	85020	B0020	BOXER (94-)
1305559080	85020	B0020	BOXER (02-)
1307156080	73984	H0228	BOXER (94-)
1307156080	73987	H0462	BOXER (94-)
1308.H2	85318	B0318	PARTNER (96-)
1308.J1	85006	B0006	E7 - EUROCAB
1308.J1	85004	B0004	EXPERT (95-)
1308.J1	85006	B0006	EXPERT (95-)
1308.J2	85003	B0003	EXPERT (95-)
1308.N9	85084	B0085	PARTNER (96-)
1308.P3	85074	B0074	PARTNER (96-)
1308.P4	85083	B0083	PARTNER (96-)
1308.V7	85316	B0316	PARTNER (02-)
1321310080	73987	H0462	BOXER (94-)
1328088080	85020	B0020	BOXER (94-)
1328088080	85020	B0020	BOXER (02-)
1328088080	85021	B0021	BOXER (02-)
1329227080	61390A	R1294	BOXER (02-)
1330.07	63546	R1853	PARTNER (96-)
1330.08	63547	R1854	PARTNER (96-)
1330.09	63508A	R2004	PARTNER (96-)
1330.10	63509A	R2145	PARTNER (96-)
1330.17	61390A	R1294	BOXER (94-)
1330.42	61326A	R2294	PARTNER (96-)
1330.47	63716	R2640	PARTNER (96-)
1330.52	63715	R2641	PARTNER (96-)
1330.57	61326A	R2294	PARTNER (96-)
1330.58	61326A	R2294	PARTNER (96-)
1330.82	63719A	R2689	PARTNER (02-)
1330.97	61390A	R1294	BOXER (02-)
1330.98	61390A	R1294	BOXER (02-)
1330.C9	61326A	R2294	PARTNER (96-)
1330.E1	61315A	R2298	PARTNER (96-)
1330.F4	63719A	R2689	PARTNER (02-)
1330.F7	63572	R0776	J5 (81-)
1330.G3	63719A	R2689	PARTNER (02-)
1330.G7	61390A	R1294	BOXER (02-)
1330.J9	63557	R0354	J5 (81-)
1330.N7	63719A	R2689	PARTNER (02-)
1331.CP	63715	R2641	PARTNER (96-)
1331.CW	61326A	R2294	PARTNER (96-)
1331.EQ	61315A	R2298	PARTNER (96-)
1331.FG	61326A	R2294	PARTNER (96-)
1331.Q4	61390A	R1294	BOXER (94-)
1331.QT	63561	R0774	J5 (81-)
1331.RV	61393	R1435	BOXER (94-)
1331.ZT	61315A	R2298	PARTNER (96-)
1471087080	85006	B0006	E7 - EUROCAB
1471087080	85004	B0004	EXPERT (95-)
1471087080	85006	B0006	EXPERT (95-)

CROSS REFERENCE LIST

O.E	Nissens	DRAW.	
(../..) PEUGEOT LIGHT VAN			
1474411080	85004	B0004	EXPERT (95-)
1474412080	85006	B0006	E7 - EUROCAB
1474412080	85004	B0004	EXPERT (95-)
1474412080	85006	B0006	EXPERT (95-)
1474413080	85006	B0006	E7 - EUROCAB
1474413080	85004	B0004	EXPERT (95-)
1474413080	85006	B0006	EXPERT (95-)
1474414080	85006	B0006	E7 - EUROCAB
1474414080	85004	B0004	EXPERT (95-)
1474414080	85006	B0006	EXPERT (95-)
1475445080	85003	B0003	EXPERT (95-)
1475594080	85003	B0003	EXPERT (95-)
1475974080	85006	B0006	E7 - EUROCAB
1475974080	85006	B0006	EXPERT (95-)
46527180	95170	F0042	BOXER (02-)
46722710	71443	H0371	BOXER (94-)
46722710	73987	H0462	BOXER (94-)
576670200	95170	F0042	BOXER (02-)
5929122	72980	H0043	J5 (81-)
5947797	71148	H0146	J5 (81-)
6444.B9	92205	K0160	PARTNER (96-)
6444.B9	92205	K0160	PARTNER (02-)
6448.46	72980	H0043	J5 (81-)
6448.48	71148	H0146	J5 (81-)
6448.60	71144	H0123	J5 (81-)
6448.62	73988	H0413	J5 (81-)
6448.78	71156	H0235	PARTNER (96-)
6448.78	71156	H0235	PARTNER (02-)
6448.80	71147	H0091	PARTNER (96-)
6448.81	71156	H0235	PARTNER (96-)
6448.81	71156	H0235	PARTNER (02-)
6448.93	73984	H0228	BOXER (94-)
6448.93	73987	H0462	BOXER (94-)
6448.A7	71149	H0254	E7 - EUROCAB
6448.A7	71149	H0254	EXPERT (95-)
6448.F9	73984	H0228	BOXER (94-)
6448.F9	73987	H0462	BOXER (94-)
6448.H8	73986	H0403	BOXER (94-)
6448.H8	73987	H0462	BOXER (94-)
6448.H8	73986	H0403	BOXER (02-)
6453.P8	95011	F0005	PARTNER (96-)
6455.AH	95346	F0279	PARTNER (02-)
6455.AJ	95346	F0279	PARTNER (02-)
6455.AK	95346	F0279	PARTNER (02-)
6455.AT	94542	C0544	PARTNER (02-)
6455.AV	94313	C0321	PARTNER (96-)
6455.CV	94542	C0544	PARTNER (02-)
6455.Q6	94210	C0192	E7 - EUROCAB
6455.Q6	94210	C0192	EXPERT (95-)
6455.Q7	95010	F0039	E7 - EUROCAB
6455.Q7	95010	F0039	EXPERT (95-)
6455.Q9	94200	C0209	PARTNER (96-)

O.E	Nissens	DRAW.	
(../..) PEUGEOT LIGHT VAN			
6455.T3	94700	C0700	BOXER (94-)
6455.T4	95105	F0287	BOXER (94-)
6455.V8	94218	C0221	PARTNER (96-)
6455.V9	94313	C0321	PARTNER (96-)
6455.W4	94276	C0291	PARTNER (96-)
6455.X8	95109	F0045	PARTNER (96-)
6455.Y2	94276	C0291	PARTNER (96-)
6455.Y9	94542	C0544	PARTNER (02-)
7619387	71144	H0123	J5 (81-)
7661840	73988	H0413	J5 (81-)
7742746	95170	F0042	BOXER (02-)
9566945280	92170	K0143	E7 - EUROCAB
9566945280	92170	K0143	EXPERT (95-)
96103384	71156	H0235	PARTNER (96-)
96103384	71156	H0235	PARTNER (02-)
9610829080	95011	F0005	PARTNER (96-)
96347974	61326A	R2294	PARTNER (96-)
9636635380	96790	I0340	PARTNER (02-)
9637416580	94542	C0544	PARTNER (02-)
PONTIAC LIGHT VAN			
10312887	85409	B0409	TRANS SPORT (97-)
10312887	85409	B0409	VENTURE (97-)
10326292	94797	C0797	MONTANA (97-)
10326292	94797	C0797	TRANS SPORT (97-)
10326292	94797	C0797	VENTURE (97-)
10339103	94797	C0797	MONTANA (97-)
10339103	94797	C0797	TRANS SPORT (97-)
10339103	94797	C0797	VENTURE (97-)
10427834	85409	B0409	TRANS SPORT (97-)
10427834	85409	B0409	VENTURE (97-)
10427835	85409	B0409	TRANS SPORT (97-)
10427835	85409	B0409	VENTURE (97-)
10427836	85409	B0409	TRANS SPORT (97-)
10427836	85409	B0409	VENTURE (97-)
10427837	85409	B0409	TRANS SPORT (97-)
10427837	85409	B0409	VENTURE (97-)
10427858	85409	B0409	TRANS SPORT (97-)
10427858	85409	B0409	VENTURE (97-)
10430003	94797	C0797	MONTANA (97-)
10430003	94797	C0797	TRANS SPORT (97-)
10430003	94797	C0797	VENTURE (97-)
12362508	85408	B0408	MONTANA (97-)
12362508	85408	B0408	TRANS SPORT (97-)
12362508	85408	B0408	VENTURE (97-)
12365300	85408	B0408	MONTANA (97-)
12365300	85408	B0408	TRANS SPORT (97-)
12365300	85408	B0408	VENTURE (97-)
12367289	85408	B0408	MONTANA (97-)
12367289	85408	B0408	TRANS SPORT (97-)
12367289	85408	B0408	VENTURE (97-)
12367291	85408	B0408	MONTANA (97-)

CROSS REFERENCE LIST

O.E	Nissens	DRAW.	
(../..) PONTIAC LIGHT VAN			
12367291	85408	B0408	TRANS SPORT (97-)
12367291	85408	B0408	VENTURE (97-)
12368622	85408	B0408	MONTANA (97-)
12368622	85408	B0408	TRANS SPORT (97-)
12368622	85408	B0408	VENTURE (97-)
12368634	85408	B0408	MONTANA (97-)
12368634	85408	B0408	TRANS SPORT (97-)
12368634	85408	B0408	VENTURE (97-)
12793295	94676	C0676	G6 (05-)
12793296	94675	C0675	G6 (05-)
13 156 384	63113A	R3286	G6 (05-)
1300 245	63022A	R2706	G6 (05-)
1300 247	63023	R2707	G6 (05-)
1300 247	63023A	R2707	G6 (05-)
1300 264	63114	R3292	G6 (05-)
1300 412	63113A	R3286	G6 (05-)
13114943	94611	C0611	G6 (05-)
1341362	85243	B0243	G6 (05-)
1618 260	73377	H0409	G6 (05-)
1848 044	95338	F0237	G6 (05-)
1850 095	73377	H0409	G6 (05-)
1850 095	94611	C0611	G6 (05-)
22136414	85408	B0408	MONTANA (97-)
22136414	85408	B0408	TRANS SPORT (97-)
22136414	85408	B0408	VENTURE (97-)
24418341	63022A	R2706	G6 (05-)
24418371	95339	F0238	G6 (05-)
52451292	60962	R2094	TRANS SPORT (89-)
52451293	60962	R2094	TRANS SPORT (89-)
52452672	60962	R2094	TRANS SPORT (89-)
52452673	60962	R2094	TRANS SPORT (89-)
52453114	94393	C0439	MONTANA (89-)
52453114	94393	C0439	TRANS SPORT (89-)
52453114	94393	C0439	VENTURE (89-)
52453959	94393	C0439	MONTANA (89-)
52453959	94393	C0439	TRANS SPORT (89-)
52453959	94393	C0439	VENTURE (89-)
52461229	94394	C0440	MONTANA (89-)
52461229	94394	C0440	TRANS SPORT (89-)
52461229	94394	C0440	VENTURE (89-)
52477222	60962	R2094	TRANS SPORT (89-)
52477673	94843	C0843	MONTANA (97-)
52477673	94843	C0843	TRANS SPORT (97-)
52477673	94843	C0843	VENTURE (97-)
52486810	94843	C0843	MONTANA (97-)
52486810	94843	C0843	TRANS SPORT (97-)
52486810	94843	C0843	VENTURE (97-)
6341153	85243	B0243	G6 (05-)
71740528	95338	F0237	G6 (05-)
RENAULT LIGHT VAN			
4401893	63912A	R0975	TRAFIC (97-)

O.E	Nissens	DRAW.	
(../..) RENAULT LIGHT VAN			
4403 216	63812A	R2463	MASTER (98-)
4403216	63812A	R2463	MASTER (98-)
4408078	96762	I0342	TRAFIC (01-)
4501136	63935A	R2121	MASTER (98-)
50 00 397 635	63952	R0635	B (83-)
50 00 398 274	63986	R2612	B (83-)
50 00 450 226	63952	R0635	B (83-)
60 06 000 709	63894	R0612	EXPRESS (91-)
60 06 000 709	63894	R0612	EXTRA (91-)
60 06 000 709	63894	R0612	RAPID (91-)
60 06 000 711	63892	R0620	EXPRESS (91-)
60 06 000 711	63892	R0620	EXTRA (91-)
60 06 000 711	63892	R0620	RAPID (91-)
60 06 000 712	63947	R1322	EXPRESS (91-)
60 06 000 712	63947	R1322	EXTRA (91-)
60 06 000 712	63947	R1322	RAPID (91-)
60 06 004 494	63834	R2747	TRAFIC (89-)
77 00 272 365	95035	F0118	EXPRESS (91-)
77 00 272 365	95035	F0118	EXTRA (85-)
77 00 272 365	95035	F0118	EXTRA (91-)
77 00 272 365	95035	F0118	RAPID (85-)
77 00 272 365	95035	F0118	RAPID (91-)
77 00 272 616	94243	C0228	EXPRESS (91-)
77 00 272 616	94243	C0228	EXTRA (91-)
77 00 272 616	94243	C0228	RAPID (91-)
77 00 301 171	63985	R2123	KANGOO (98-)
77 00 301 253	94324	C0300	KANGOO (98-)
77 00 304 932	63854A	R2020	KANGOO (98-)
77 00 310 123	63796	R2993	TRAFIC (97-)
77 00 312 858	63854A	R2020	KANGOO (98-)
77 00 312 899	63025A	R2699	TRAFIC (01-)
77 00 312 901	94671	C0671	TRAFIC (01-)
77 00 312 903	96762	I0342	TRAFIC (01-)
77 00 314 382	63884	R0693	KANGOO (98-)
77 00 417 175	63855A	R2210	KANGOO (98-)
77 00 428 082	637931	R2668	KANGOO (98-)
77 00 428 083	94439	C0459	KANGOO (98-)
77 00 430 648	63886	R0646	KANGOO (98-)
77 00 430 784	63808	R2637	KANGOO (98-)
77 00 430 784	638081	R2637	KANGOO (98-)
77 00 696 140	63900	R0234	TRAFIC (80-)
77 00 696 425	63860	R0425	TRAFIC (80-)
77 00 700 099	63951	R0634	TRAFIC (80-)
77 00 720 232	63850	R0229	TRAFIC (80-)
77 00 736 827	63880	R0232	TRAFIC (80-)
77 00 741 062	63940A	R0235	MASTER (80-)
77 00 741 216	63912A	R0975	TRAFIC (89-)
77 00 741 216	63912A	R0975	TRAFIC (97-)
77 00 744 158	63941	R1267	TRAFIC (89-)
77 00 745 110	63940A	R0235	MASTER (80-)
77 00 745 164	63906	R0782	TRAFIC (89-)
77 00 745 281	90535	O0033	TRAFIC (89-)

CROSS REFERENCE LIST

O.E	Nissens	DRAW.	
(../..) RENAULT LIGHT VAN			
77 00 745 281	90535	O0033	TRAFIC (97-)
77 00 757 930	63867	R0995	EXPRESS (85-)
77 00 757 930	63867	R0995	EXTRA (85-)
77 00 757 930	63867	R0995	RAPID (85-)
77 00 773 700	63934A	R1671	EXPRESS (85-)
77 00 773 700	63934A	R1671	EXTRA (85-)
77 00 773 700	63934A	R1671	RAPID (85-)
77 00 773 968	63867	R0995	EXPRESS (85-)
77 00 773 968	63867	R0995	EXTRA (85-)
77 00 773 968	63867	R0995	RAPID (85-)
77 00 784 039	63887	R0641	TRAFIC (89-)
77 00 786 444	63924A	R0625	EXPRESS (91-)
77 00 786 444	63924A	R0625	EXTRA (91-)
77 00 786 444	63924A	R0625	RAPID (91-)
77 00 795 174	63921A	R0966	RAPID (91-)
77 00 805 486	63929A	R0610	EXPRESS (91-)
77 00 805 486	63929A	R0610	EXTRA (91-)
77 00 806 575	63968A	R1910	EXPRESS (91-)
77 00 806 575	63968A	R1910	EXTRA (91-)
77 00 806 575	63968A	R1910	RAPID (91-)
77 00 825 300	94132	C0131	EXPRESS (91-)
77 00 825 300	94132	C0131	EXTRA (91-)
77 00 825 300	94132	C0131	RAPID (91-)
77 00 836 303	63768	R2636	KANGOO (98-)
77 00 836 314	95241	F0124	KANGOO (98-)
77 00 838 134	639371	R1812	KANGOO (98-)
77 00 838 134	63937A	R1812	KANGOO (98-)
77 00 841 978	95031	F0116	MASTER (98-)
77 01 026 569	73358	H0183	MASTER (80-)
77 01 027 078	73359	H0178	EXPRESS (85-)
77 01 027 078	733591	H0414	EXPRESS (85-)
77 01 027 078	73361	H0194	EXPRESS (85-)
77 01 027 078	73359	H0178	EXPRESS (91-)
77 01 027 078	733591	H0414	EXPRESS (91-)
77 01 027 078	73361	H0194	EXPRESS (91-)
77 01 027 078	73359	H0178	EXTRA (85-)
77 01 027 078	733591	H0414	EXTRA (85-)
77 01 027 078	73361	H0194	EXTRA (85-)
77 01 027 078	73359	H0178	EXTRA (91-)
77 01 027 078	733591	H0414	EXTRA (91-)
77 01 027 078	73361	H0194	EXTRA (91-)
77 01 027 078	73359	H0178	RAPID (85-)
77 01 027 078	733591	H0414	RAPID (85-)
77 01 027 078	73361	H0194	RAPID (85-)
77 01 027 078	73359	H0178	RAPID (91-)
77 01 027 078	733591	H0414	RAPID (91-)
77 01 027 078	73361	H0194	RAPID (91-)
77 01 034 551	73252	H0110	KANGOO (98-)
77 01 043 670	63922	R2760	MASTER (98-)
77 01 043 693	63935A	R2121	MASTER (98-)
77 01 043 695	96890	I0060	MASTER (98-)
77 01 044 406	94325	C0301	MASTER (98-)

O.E	Nissens	DRAW.	
(../..) RENAULT LIGHT VAN			
77 01 044 407	94326	C0302	MASTER (98-)
77 01 045 216	85253	B0253	KANGOO (98-)
77 01 046 205	85245	B0245	MASTER (98-)
77 01 046 209	63922	R2760	MASTER (98-)
77 01 046 210	63936A	R2122	MASTER (98-)
77 01 046 627	85253	B0253	KANGOO (98-)
77 01 047 886	63924A	R0625	EXPRESS (91-)
77 01 047 886	63924A	R0625	EXTRA (91-)
77 01 047 886	63924A	R0625	RAPID (91-)
77 01 049 603	85244	B0244	MASTER (98-)
77 01 049 664	63812A	R2463	MASTER (98-)
77 01 049 665	94660	C0660	MASTER (98-)
77 01 050 677	85253	B0253	KANGOO (98-)
77 01 057 117	63823	R2919	MASTER (98-)
77 01 057 119	63824A	R2920	MASTER (98-)
77 01 057 120	63761	R3270	MASTER (98-)
77 01 057 121	96767	I0343	MASTER (98-)
77 01 057 122	94659	C0659	MASTER (98-)
77 01 204 680	73252	H0110	KANGOO (98-)
77 01 205 538	72985	H0349	KANGOO (98-)
77 01 205 584	73375	H0265	MASTER (98-)
77 01 205 748	92215	K0182	KANGOO (98-)
77 01 206 691	85244	B0244	MASTER (98-)
77 01 206 691	85245	B0245	MASTER (98-)
77 01 348 916	63990	R0388	RODEO (70-)
77 01 395 092	63924A	R0625	EXPRESS (91-)
77 01 395 092	63924A	R0625	EXTRA (91-)
77 01 395 092	63924A	R0625	RAPID (91-)
77 04 000 112	73330	H0057	TRAFIC (80-)
77 04 000 112	73330	H0057	TRAFIC (89-)
77 04 000 112	73330	H0057	TRAFIC (97-)
81 00 343 476	63809	R2669	KANGOO (98-)
82 00 019 380	63817	R2916	TRAFIC (01-)
82 00 019 382	94678	C0678	TRAFIC (01-)
82 00 033 831	63809	R2669	KANGOO (98-)
82 00 072 712	63763	R2657	KANGOO (98-)
82 00 072 713	63762	R2665	KANGOO (98-)
82 00 073 817	63026	R2700	TRAFIC (01-)
82 00 073 912	94672	C0672	TRAFIC (01-)
82 00 106 950	94439	C0459	KANGOO (98-)
82 00 137 650	94745	C0745	KANGOO (98-)
82 00 140 972	63854A	R2020	KANGOO (98-)
82 00 219 497	96775	I0379	TRAFIC (01-)
82 00 221 131	94657	C0657	KANGOO (98-)
82 00 221 132	94657	C0657	KANGOO (98-)
82 00 240 818	63763	R2657	KANGOO (98-)
82 00 297 815	63817	R2916	TRAFIC (01-)
82 00 297 816	63818	R2917	TRAFIC (01-)
82 00 330 848	63985	R2123	KANGOO (98-)
SEAT LIGHT VAN			
068.117.021 B	90607	O0292	INCA (95-)

CROSS REFERENCE LIST

O.E	Nissens	DRAW.	
(../..) SEAT LIGHT VAN			
1H0.121.253 L	652451	R1226	INCA (95-)
1H0.121.253 P	65244A	R1225	INCA (95-)
1H1.819.031 A	73962	H0085	INCA (95-)
1H1.819.031 B	73962	H0085	INCA (95-)
1H1.820.103 C	92135	K0123	INCA (95-)
1H2.819.031 A	73961	H0109	INCA (95-)
1H2.819.031 B	73961	H0109	INCA (95-)
1HM.121.253 D	652551	R1395	INCA (95-)
1HM.121.253 D	65255A	R1395	INCA (95-)
6K0.121.191	85468	B0468	INCA (95-)
6K0.121.191 A	85469	B0469	INCA (95-)
6K0.121.191 C	85470	B0470	INCA (95-)
6K0.121.191 Q	85468	B0468	INCA (95-)
6K0.121.253 AG	67301	R2456	INCA (95-)
6K0.121.253 AS	65290	R3038	INCA (95-)
6K0.121.253 G	652681	R1870	INCA (95-)
6K0.121.253 G	65268A	R1870	INCA (95-)
6K0.121.253 K	639951	R1447	INCA (95-)
6K0.121.253 K	63995A	R1447	INCA (95-)
6K0.121.253 S	639961	R14461	INCA (95-)
6K0.121.253 S	63996A	R1446	INCA (95-)
6K0.121.253 T	67308	R2613	INCA (95-)
6K0.121.253 AA	65245A	R1226	INCA (95-)
6K0.820.413 B	94204	C0248	INCA (95-)
TALBOT LIGHT VAN			
1300.F7	63572	R0776	EXPRESS (81-)
1300.F8	63572	R0776	EXPRESS (81-)
1300.G0	63561	R0774	EXPRESS (81-)
1300.J9	63557	R0354	EXPRESS (81-)
1300.K1	63561	R0774	EXPRESS (81-)
1300.K3	63558	R0359	EXPRESS (81-)
1305.51	63561	R0774	EXPRESS (81-)
1330.F7	63572	R0776	EXPRESS (81-)
1330.J9	63557	R0354	EXPRESS (81-)
1331.QT	63561	R0774	EXPRESS (81-)
1331.QZ	63558	R0359	EXPRESS (81-)
5929122	72980	H0043	EXPRESS (81-)
5947797	71148	H0146	EXPRESS (81-)
6448.48	71148	H0146	EXPRESS (81-)
6448.60	71144	H0123	EXPRESS (81-)
6448.62	73988	H0413	EXPRESS (81-)
7619387	71144	H0123	EXPRESS (81-)
7661840	73988	H0413	EXPRESS (81-)
TOYOTA LIGHT VAN			
16400-04010	64845	R1724	HI-LUX (88-)
16400-04020	64728	R0588	4 RUNNER (85-)
16400-04020	64728	R0588	HI-LUX (84-)
16400-04020	64728	R0588	HI-LUX (88-)
16400-0A071	64627A	R2837	SIENNA (97-)
16400-0A072	64627A	R2837	SIENNA (97-)

O.E	Nissens	DRAW.	
(../..) TOYOTA LIGHT VAN			
16400-13380	64709	R2749	LITE-ACE (85-)
16400-17030	64861	R3212	LAND CRUISER 80 (90-)
16400-17060	64861	R3212	LAND CRUISER 80 (90-)
16400-17320	64818	R3314	LAND CRUISER 100 (98-)
16400-17321	64818	R3314	LAND CRUISER 100 (98-)
16400-17330	64818	R3314	LAND CRUISER 100 (98-)
16400-17331	64818	R3314	LAND CRUISER 100 (98-)
16400-30080	64599A	R3229	HI-LUX (01-)
16400-30110	64649A	R2968	HI-ACE (01-)
16400-35210	64728	R0588	HI-LUX (88-)
16400-35290	64848	R1974	4 RUNNER (85-)
16400-35380	64844	R1723	4 RUNNER (85-)
16400-35520	64846	R1840	4 RUNNER (85-)
16400-35520	64846	R1840	HI-LUX (88-)
16400-50210	64882	R3210	LAND CRUISER 100 (98-)
16400-50211	64882	R3210	LAND CRUISER 100 (98-)
16400-54250	64614	R3277	HI-LUX (84-)
16400-54280	64733	R1118	HI-ACE (84-)
16400-54340	64613	R2326	HI-LUX (84-)
16400-54750	64737	R1936	HI-ACE (89-)
16400-54750	64774	R1942	HI-ACE (89-)
16400-54751	64737	R1936	HI-ACE (89-)
16400-54751	64774	R1942	HI-ACE (89-)
16400-54752	64737	R1936	HI-ACE (89-)
16400-54752	64774	R1942	HI-ACE (89-)
16400-54753	64737	R1936	HI-ACE (89-)
16400-54753	64774	R1942	HI-ACE (89-)
16400-54760	64737	R1936	HI-ACE (89-)
16400-54761	64737	R1936	HI-ACE (89-)
16400-54762	64737	R1936	HI-ACE (89-)
16400-58420	64751	R2061	DYNA 200 (95-)
16400-58460	64752	R2062	DYNA 200 (95-)
16400-5B320	64858A	R1945	HI-ACE (95-)
16400-5B330	64857A	R1946	HI-ACE (95-)
16400-5B331	64857A	R1946	HI-ACE (95-)
16400-5B620	64698	R2928	HI-LUX (97-)
16400-61070	64650	R3033	LAND CRUISER 70 (84-)
16400-64331	64708	R3132	LITE-ACE (85-)
16400-65020	64869	R3276	4 RUNNER (85-)
16400-65040	64847	R1725	4 RUNNER (85-)
16400-65040	64847	R1725	HI-LUX (88-)
16400-66140	64817	R3313	LAND CRUISER 100 (98-)
16400-67100	64859A	R2201	HI-ACE (95-)
16400-67121	64637A	R2578	LAND CRUISER 90 (96-)
16400-67130	64636A	R2577	LAND CRUISER 90 (96-)
16400-71070	64728	R0588	4 RUNNER (85-)
16400-71070	64728	R0588	HI-LUX (84-)
16400-71070	64728	R0588	HI-LUX (88-)
16400-73150	64707	R2929	LITE-ACE (92-)
16400-75071	64778	R1982	HI-ACE (89-)
16400-75071	64862	R1950	HI-ACE (89-)
16400-75160	64626A	R2378	4 RUNNER (95-)

CROSS REFERENCE LIST

O.E	Nissens	DRAW.	
(../..) TOYOTA LIGHT VAN			
16400-75160	647551	R2377	4 RUNNER (95-)
16400-75160	64626A	R2378	LAND CRUISER 90 (96-)
16400-75160	647551	R2377	LAND CRUISER 90 (96-)
16400-75170	64626A	R2378	4 RUNNER (95-)
16400-75170	647551	R2377	4 RUNNER (95-)
16400-75170	64626A	R2378	LAND CRUISER 90 (96-)
16400-75170	647551	R2377	LAND CRUISER 90 (96-)
16400-75180	647551	R2377	4 RUNNER (95-)
16400-75180	64755A	R2377	4 RUNNER (95-)
16400-75180	647551	R2377	LAND CRUISER 90 (96-)
16400-75180	64755A	R2377	LAND CRUISER 90 (96-)
16400-75190	647551	R2377	4 RUNNER (95-)
16400-75190	64755A	R2377	4 RUNNER (95-)
16400-75190	647551	R2377	LAND CRUISER 90 (96-)
16400-75190	64755A	R2377	LAND CRUISER 90 (96-)
16400-75321	64858A	R1945	HI-ACE (95-)
16410-07060	64623A	R2762	TACOMA (95-)
16410-07061	64623A	R2762	TACOMA (95-)
16410-0C010	64624A	R2763	TACOMA (95-)
16410-0C011	64624A	R2763	TACOMA (95-)
16410-0C012	64624A	R2763	TACOMA (95-)
16410-0C013	64624A	R2763	TACOMA (95-)
16410-0C040	64622A	R2761	TACOMA (95-)
16410-0C041	64622A	R2761	TACOMA (95-)
16410-0C042	64622A	R2761	TACOMA (95-)
87107-26010	73457	H0282	HI-ACE (95-)
88460-04030	94396	C0375	HI-LUX (88-)
88460-08520	94517	C0520	HI-LUX (97-)
88460-26330	94787	C0787	HI-ACE (95-)
88460-26330	94787	C0787	HI-ACE (01-)
88460-35020	94029	C0421	HI-LUX (88-)
88460-35080	94513	C0516	4 RUNNER (85-)
88460-35080	94513	C0516	HI-LUX (88-)
88460-35090	94513	C0516	4 RUNNER (85-)
88460-35090	94513	C0516	HI-LUX (88-)
88460-35130	94396	C0375	HI-LUX (88-)
88460-35210	94518	C0521	HI-LUX (97-)
88460-60060	94187	C0170	LAND CRUISER 80 (90-)
88460-60160	94184	C0171	LAND CRUISER 80 (94-)
88460-60240	94512	C0515	LAND CRUISER 90 (96-)
88460-89115	94029	C0421	HI-LUX (88-)
88460-90A14	94052	C0052	LAND CRUISER 60 (84-)
88461-35050	94512	C0515	4 RUNNER (95-)
88461-35050	94512	C0515	LAND CRUISER 90 (96-)
88461-60051	94053	C0053	LAND CRUISER 100 (98-)
88471-16040	95065	F0015	4 RUNNER (85-)
88471-16040	95065	F0015	HI-LUX (88-)
88471-16040	95065	F0015	LAND CRUISER 80 (90-)
88471-16040	95065	F0015	LAND CRUISER 80 (94-)
88471-20050	95063	F0013	DYNA (00-)
88471-20050	95063	F0013	DYNA 150 (95-)
88471-20050	95063	F0013	DYNA 150 (01-)

O.E	Nissens	DRAW.	
(../..) TOYOTA LIGHT VAN			
88471-20050	95063	F0013	DYNA 200 (95-)
88471-20050	95063	F0013	HI-LUX (97-)
88471-34010	95063	F0013	4 RUNNER (95-)
88471-34010	95063	F0013	LAND CRUISER 90 (96-)
88501-34010	92124	K0112	4 RUNNER (85-)
88501-34010	92124	K0112	HI-LUX (88-)
88501-35010	92112	K0100	4 RUNNER (85-)
88501-35010	92112	K0100	HI-LUX (88-)
88501-60101	92107	K0095	LAND CRUISER 80 (94-)
VAUXHALL LIGHT VAN			
1618 016	95057	F0106	COMBO
1618 046	94228	C0239	COMBO
1850 051	94228	C0239	COMBO
240005871	95057	F0106	COMBO
90486845	95057	F0106	COMBO
VOLKSWAGEN LIGHT VAN			
028.117.021 B	90608	O0293	CADDY (04-)
028.117.021 B	90608	O0293	TOURAN (03-)
028.117.021 B	90608	O0293	TRANSPORTER T5 (03-)
028.117.021 K	90608	O0293	CADDY (04-)
028.117.021 K	90608	O0293	TOURAN (03-)
028.117.021 K	90608	O0293	TRANSPORTER T5 (03-)
068.117.021 B	90607	O0292	CADDY (82-)
068.117.021 B	90607	O0292	CADDY (95-)
068.117.021 B	90607	O0292	LT (82-)
068.117.021 B	90607	O0292	LT (03-)
068.117.021 B	90607	O0292	TRANSPORTER T4 (90-)
068.121.253 A	65230	R0312	TRANSPORTER T3 (79-)
068.121.253 B	65239	R0196	TRANSPORTER T3 (79-)
068.121.253 C	65239	R0196	TRANSPORTER T3 (79-)
068.121.253 D	65239	R0196	TRANSPORTER T3 (79-)
068.121.253 E	65239	R0196	TRANSPORTER T3 (79-)
075.121.253 D	65221	R0311	LT (82-)
075.121.253 J	65221	R0311	LT (82-)
078.117.021 A	90606	O0291	CADDY (04-)
078.117.021 A	90606	O0291	TOURAN (03-)
16400-04010	64845	R1724	TARO (89-)
171.121.253 CL	65264	R0780	CADDY (82-)
171.819.031 E	73940	H0086	CADDY (82-)
1H0.121.253 L	652451	R1226	CADDY (95-)
1H0.121.253 P	65244A	R1225	CADDY (95-)
1H1.819.031 A	73962	H0085	CADDY (95-)
1H1.820.103 C	92135	K0123	CADDY (95-)
1H2.819.031 A	73961	H0109	CADDY (95-)
1HM.121.253 D	652551	R1395	CADDY (95-)
1HM.121.253 D	65255A	R1395	CADDY (95-)
1K0.121.251 E	65278	R3215	TOURAN (03-)
1K0.121.251 F	65278	R3215	TOURAN (03-)
1K0.121.251 N	65281	R3216	TOURAN (03-)
1K0.121.251 P	65277	R3214	CADDY (04-)

CROSS REFERENCE LIST

(../..) VOLKSWAGEN LIGHT VAN

O.E	Nissens	DRAW.	
1K0.121.251 P	65277	R3214	TOURAN (03-)
1K0.819.031	70228	H0426	CADDY (04-)
1K0.819.031	70228	H0426	TOURAN (03-)
1K0.820.411 F	94684	C0684	TOURAN (03-)
1K1.820.103	92163	K0176	CADDY (04-)
1K1.820.103	92163	K0176	TOURAN (03-)
1K2.820.103	92164	K0192	CADDY (04-)
1K2.820.103	92164	K0192	TOURAN (03-)
1T0.820.411 B	94690	C0690	CADDY (04-)
281.265.303	73950	H0087	LT (82-)
281.265.303 A	73950	H0087	LT (82-)
2D0.121.253	65231	R2622	LT (96-)
2D0.121.253	65231A	R2622	LT (96-)
2D0.121.253	65231	R2622	LT (03-)
2D0.121.253	65231A	R2622	LT (03-)
2D0.121.253 B	65231	R2622	LT (96-)
2D0.121.253 B	65231A	R2622	LT (96-)
2D0.121.253 B	65231	R2622	LT (03-)
2D0.121.253 B	65231A	R2622	LT (03-)
2D0.121.253 E	65231	R2622	LT (96-)
2D0.121.253 E	65231A	R2622	LT (96-)
2D0.121.253 E	65231	R2622	LT (03-)
2D0.121.253 E	65231A	R2622	LT (03-)
2D0.145.805	96842	I0095	LT (96-)
2D0.145.805	96842	I0095	LT (03-)
2D0.820.413 A	94258	C0252	LT (96-)
2D0.820.413 A	94258	C0252	LT (03-)
2D0.820.413 C	94258	C0252	LT (96-)
2D0.820.413 C	94258	C0252	LT (03-)
321.121.253 AL	651511	R07321	CADDY (82-)
321.121.253 AL	65151A	R0732	CADDY (82-)
46541535	73964	H0056	TRANSPORTER T3 (79-)
46559315	73964	H0056	TRANSPORTER T3 (79-)
6K0.121.191	85468	B0468	CADDY (95-)
6K0.121.191 A	85469	B0469	CADDY (95-)
6K0.121.191 C	85470	B0470	CADDY (95-)
6K0.121.191 Q	85468	B0468	CADDY (95-)
6K0.121.253 AC	673001	R2361	CADDY (95-)
6K0.121.253 AC	67300A	R2361	CADDY (95-)
6K0.121.253 AG	67301	R2456	CADDY (95-)
6K0.121.253 AS	65290	R3038	CADDY (95-)
6K0.121.253 G	652681	R1870	CADDY (95-)
6K0.121.253 G	65268A	R1870	CADDY (95-)
6K0.121.253 K	639951	R1447	CADDY (95-)
6K0.121.253 K	63995A	R1447	CADDY (95-)
6K0.121.253 S	639961	R14461	CADDY (95-)
6K0.121.253 S	63996A	R1446	CADDY (95-)
6K0.121.253 T	67308	R2613	CADDY (95-)
6K0.121.253 AA	65245A	R1226	CADDY (95-)
6K0.145.805	96769	I0185	CADDY (95-)
6K0.145.805 C	96796	I0113	CADDY (95-)
6K0.145.805 F	96796	I0113	CADDY (95-)

(../..) VOLKSWAGEN LIGHT VAN

O.E	Nissens	DRAW.	
6K0.820.413 B	94204	C0248	CADDY (95-)
701.121.207 C	85248	B0248	TRANSPORTER T4 (90-)
701.121.209 H	85248	B0248	TRANSPORTER T4 (90-)
701.121.253	65184	R1076	TRANSPORTER T4 (90-)
701.121.253 B	65184	R1076	TRANSPORTER T4 (90-)
701.121.253 D	65242A	R0719	TRANSPORTER T4 (90-)
701.121.253 D	65273	R0719	TRANSPORTER T4 (90-)
701.121.253 E	65242A	R0719	TRANSPORTER T4 (90-)
701.121.253 E	65273	R0719	TRANSPORTER T4 (90-)
701.121.253 F	65242A	R0719	TRANSPORTER T4 (90-)
701.121.253 F	65273	R0719	TRANSPORTER T4 (90-)
701.121.253 K	65242A	R0719	TRANSPORTER T4 (90-)
701.121.253 K	65273	R0719	TRANSPORTER T4 (90-)
701.121.253 M	65273	R0719	TRANSPORTER T4 (90-)
701.145.805 A	96658	I0350	TRANSPORTER T4 (90-)
701.819.031 A	73965	H0175	TRANSPORTER T4 (90-)
701.819.031 A	73971	H0075	TRANSPORTER T4 (90-)
701.819.031 A	73974	H0459	TRANSPORTER T4 (90-)
701.819.031 B	73965	H0175	TRANSPORTER T4 (90-)
701.819.031 B	73971	H0075	TRANSPORTER T4 (90-)
701.819.031 B	73974	H0459	TRANSPORTER T4 (90-)
701.819.032	73974	H0459	TRANSPORTER T4 (90-)
701.820.103 A	92133	K0121	TRANSPORTER T4 (90-)
701.820.413 D	94307	C0276	TRANSPORTER T4 (90-)
729.819.031	73971	H0075	TRANSPORTER T4 (90-)
729.819.032	73971	H0075	TRANSPORTER T4 (90-)
7D0.121.253	65238A	R1848	TRANSPORTER T4 (90-)
7D0.145.803 A	96755	I0345	TRANSPORTER T4 (90-)
7D0.145.805	96755	I0345	TRANSPORTER T4 (90-)
7D0.820.191	95342	F0241	TRANSPORTER T4 (90-)
7D0.820.191A	95188	F0193	TRANSPORTER T4 (90-)
7D0.820.413 B	94524	C0526	TRANSPORTER T4 (90-)
7DB.959.455 K	85248	B0248	TRANSPORTER T4 (90-)
7H0.145.804 A	96683	I0237	TRANSPORTER T5 (03-)
7H0.145.804 B	96683	I0237	TRANSPORTER T5 (03-)
7H0.820.411 B	94604	C0604	TRANSPORTER T5 (03-)
7H0.820.411 C	94604	C0604	TRANSPORTER T5 (03-)
7L0.121.253	63758	R2910	TOUAREG (02-)
7L0.121.253 A	63758	R2910	TOUAREG (02-)
7L0.145.803 A	96688	I0242	TOUAREG (02-)
7L0.145.804 A	96687	I0241	TOUAREG (02-)
7L0.317.021	90617	O0306	TOUAREG (02-)
7L0.820.411 D	94667	C0667	TOUAREG (02-)
7L0.820.411 F	94667	C0667	TOUAREG (02-)
7L0.898.191 A	95359	F0266	TOUAREG (02-)
7L6.121.253	65275	R2930	TOUAREG (02-)
7L6.121.253 A	65276	R2931	TOUAREG (02-)
7L6.121.253 B	65276	R2931	TOUAREG (02-)
7L6.121.253 E	65276	R2931	TOUAREG (02-)
7L6.422.855 A	90636	O0318	TOUAREG (02-)
7L6.422.855 B	90633	O0319	TOUAREG (02-)
7L6.422.855 C	90636	O0318	TOUAREG (02-)

CROSS REFERENCE LIST

O.E	Nissens	DRAW.	
(../..) VOLKSWAGEN LIGHT VAN			
7L6.422.855 D	90633	O0319	TOUAREG (02-)
81619206023	73950	H0087	LT (82-)
867.819.121	73964	H0056	TRANSPORTER T3 (79-)
867.819.121 A	73964	H0056	TRANSPORTER T3 (79-)

O.E	Nissens	DRAW.	

NOTES

5 Nissens reference list
Nissens-referenceliste
Nissens-Referenzliste
Liste de références Nissens

NOTES

NISSENS' REFERENCE LIST

Nissens			DRAW.
608911	CHEVROLET LIGHT VAN	VAN G-SERIE (81-)	R2431
60915A	CHEVROLET LIGHT VAN	BLAZER (94-)	R2546
	CHEVROLET LIGHT VAN	BRAVADA (94-)	
	CHEVROLET LIGHT VAN	PICKUP S/T	
	GMC LIGHT VAN	ENVOY (94-)	
	GMC LIGHT VAN	JIMMY (94-)	
	GMC LIGHT VAN	PICK-UP S10 (94-)	
	GMC LIGHT VAN	PICK-UP S15 (94-)	
	GMC LIGHT VAN	PICKUP S/T	
	GMC LIGHT VAN	SONOMA (94-)	
	OLDSMOBILE LIGHT VAN	BRAVADA	
609361	CHEVROLET LIGHT VAN	BLAZER (94-)	R2439
	CHEVROLET LIGHT VAN	BRAVADA (94-)	
	CHEVROLET LIGHT VAN	PICKUP S/T	
	GMC LIGHT VAN	ENVOY (94-)	
	GMC LIGHT VAN	JIMMY (94-)	
	GMC LIGHT VAN	PICK-UP S10 (94-)	
	GMC LIGHT VAN	PICK-UP S15 (94-)	
	GMC LIGHT VAN	PICKUP S/T	
	GMC LIGHT VAN	SONOMA (94-)	
	OLDSMOBILE LIGHT VAN	BRAVADA	
60936A	CHEVROLET LIGHT VAN	BLAZER (94-)	R2439
	CHEVROLET LIGHT VAN	BRAVADA (94-)	
	CHEVROLET LIGHT VAN	PICKUP S/T	
	GMC LIGHT VAN	ENVOY (94-)	
	GMC LIGHT VAN	JIMMY (94-)	
	GMC LIGHT VAN	PICK-UP S10 (94-)	
	GMC LIGHT VAN	PICK-UP S15 (94-)	
	GMC LIGHT VAN	PICKUP S/T	
	GMC LIGHT VAN	SONOMA (94-)	
	OLDSMOBILE LIGHT VAN	BRAVADA	
60940	CHEVROLET LIGHT VAN	VAN G-SERIE (81-)	R0461
60945	CHEVROLET LIGHT VAN	PICKUP C/K	R2109
	CHEVROLET LIGHT VAN	SUBURBAN (92-)	
	GMC LIGHT VAN	PICKUP C/K	
	GMC LIGHT VAN	SUBURBAN (92-)	
60946	CHEVROLET LIGHT VAN	BLAZER (82-)	R3274
	CHEVROLET LIGHT VAN	PICKUP C/K	
	CHEVROLET LIGHT VAN	SUBURBAN (92-)	
	GMC LIGHT VAN	PICKUP C/K	
	GMC LIGHT VAN	SUBURBAN (92-)	
60946A	CHEVROLET LIGHT VAN	BLAZER (82-)	
	CHEVROLET LIGHT VAN	PICKUP C/K	
	CHEVROLET LIGHT VAN	SUBURBAN (92-)	
	GMC LIGHT VAN	PICKUP C/K	
	GMC LIGHT VAN	SUBURBAN (92-)	
60949	CHEVROLET LIGHT VAN	BLAZER (82-)	R2105
	CHEVROLET LIGHT VAN	PICKUP C/K	
	CHEVROLET LIGHT VAN	PICKUP C/K	
	CHEVROLET LIGHT VAN	PICKUP R/V	
	CHEVROLET LIGHT VAN	SUBURBAN (81-)	
	CHEVROLET LIGHT VAN	VAN P-SERIE (81-)	
	CHEVROLET LIGHT VAN	VAN P-SERIE (81-)	
	GMC LIGHT VAN	JIMMY (82-)	
	GMC LIGHT VAN	PICKUP C/K	
	GMC LIGHT VAN	PICKUP C/K	
60949	GMC LIGHT VAN	PICKUP R/V	R2105
	GMC LIGHT VAN	SUBURBAN (81-)	
	GMC LIGHT VAN	VAN P-SERIE (81-)	
	GMC LIGHT VAN	VAN P-SERIE (81-)	
	CHEVROLET LIGHT VAN	BLAZER (82-)	
	CHEVROLET LIGHT VAN	PICKUP C/K	
	CHEVROLET LIGHT VAN	PICKUP C/K	
	GMC LIGHT VAN	PICKUP C/K	
	CHEVROLET LIGHT VAN	BLAZER (82-)	
	CHEVROLET LIGHT VAN	PICKUP S/T	

Nissens			DRAW.
60960	CHEVROLET LIGHT VAN	PICKUP S/T	R2095
	GMC LIGHT VAN	JIMMY (82-)	
	GMC LIGHT VAN	PICKUP S/T	
	GMC LIGHT VAN	PICKUP S/T	
	GMC LIGHT VAN	SONOMA (91-)	
60962	CHEVROLET LIGHT VAN	LUMINA APV (89-)	R2094
	CHEVROLET LIGHT VAN	MONTANA (89-)	
	CHEVROLET LIGHT VAN	TRANS SPORT (89-)	
	CHEVROLET LIGHT VAN	VENTURE (89-)	
	OLDSMOBILE LIGHT VAN	SILHOUETTE (89-)	
	PONTIAC LIGHT VAN	MONTANA (89-)	
	PONTIAC LIGHT VAN	TRANS SPORT (89-)	
	PONTIAC LIGHT VAN	VENTURE (89-)	
60967	CHEVROLET LIGHT VAN	PICKUP C/K	R2093
	GMC LIGHT VAN	PICKUP C/K	
60968A	CHEVROLET LIGHT VAN	BLAZER (82-)	R2090
	CHEVROLET LIGHT VAN	PICKUP S/T	
	GMC LIGHT VAN	JIMMY (82-)	
	GMC LIGHT VAN	PICKUP S/T	
	GMC LIGHT VAN	SONOMA (91-)	
	OLDSMOBILE LIGHT VAN	BRAVADA	
60969	GMC LIGHT VAN	PICKUP C/K	R2099
609691	CHEVROLET LIGHT VAN	PICKUP C/K	R2099
	GMC LIGHT VAN	PICKUP C/K	
60970	CHEVROLET LIGHT VAN	BLAZER (82-)	R2091
	CHEVROLET LIGHT VAN	PICKUP R/V	
	CHEVROLET LIGHT VAN	SUBURBAN (81-)	
	CHEVROLET LIGHT VAN	VAN G-SERIE (81-)	
	CHEVROLET LIGHT VAN	VAN P-SERIE (81-)	
	GMC LIGHT VAN	JIMMY (82-)	
	GMC LIGHT VAN	PICKUP R/V	
	GMC LIGHT VAN	SUBURBAN (81-)	
	GMC LIGHT VAN	VAN G-SERIE (81-)	
	GMC LIGHT VAN	VAN P-SERIE (81-)	
60970A	CHEVROLET LIGHT VAN	BLAZER (82-)	R2091
	CHEVROLET LIGHT VAN	PICKUP R/V	
	CHEVROLET LIGHT VAN	SUBURBAN (81-)	
	CHEVROLET LIGHT VAN	VAN G-SERIE (81-)	
	CHEVROLET LIGHT VAN	VAN P-SERIE (81-)	
	GMC LIGHT VAN	JIMMY (82-)	
	GMC LIGHT VAN	PICKUP R/V	
	GMC LIGHT VAN	SUBURBAN (81-)	
	GMC LIGHT VAN	VAN G-SERIE (81-)	
	GMC LIGHT VAN	VAN P-SERIE (81-)	
60971	CHEVROLET LIGHT VAN	BLAZER (82-)	R2092
	CHEVROLET LIGHT VAN	PICKUP C/K	
	CHEVROLET LIGHT VAN	PICKUP R/V	
	CHEVROLET LIGHT VAN	SUBURBAN (81-)	
	CHEVROLET LIGHT VAN	VAN P-SERIE (81-)	
	GMC LIGHT VAN	JIMMY (82-)	
	GMC LIGHT VAN	PICKUP C/K	
	GMC LIGHT VAN	PICKUP R/V	
	GMC LIGHT VAN	SUBURBAN (81-)	
	GMC LIGHT VAN	VAN P-SERIE (81-)	
60972	CHEVROLET LIGHT VAN	PICKUP R/V	R2096
	CHEVROLET LIGHT VAN	SUBURBAN (81-)	
	GMC LIGHT VAN	PICKUP R/V	

NISSENS' REFERENCE LIST

Nissens			DRAW.
60974	CHEVROLET LIGHT VAN	BLAZER (82-)	R2104
	CHEVROLET LIGHT VAN	PICKUP C/K	
	CHEVROLET LIGHT VAN	PICKUP R/V	
	CHEVROLET LIGHT VAN	SUBURBAN (81-)	
	CHEVROLET LIGHT VAN	VAN G-SERIE (81-)	
	CHEVROLET LIGHT VAN	VAN P-SERIE (81-)	
	GMC LIGHT VAN	JIMMY (82-)	
	GMC LIGHT VAN	PICKUP C/K	
	GMC LIGHT VAN	PICKUP R/V	
	GMC LIGHT VAN	SUBURBAN (81-)	
	GMC LIGHT VAN	VAN G-SERIE (81-)	
	GMC LIGHT VAN	VAN P-SERIE (81-)	
61190	CITROEN LIGHT VAN	C 15 (84-)	R0040
	CITROEN LIGHT VAN	C 15 (84-)	
61315A	CITROEN LIGHT VAN	BERLINGO (96-)	R2298
	PEUGEOT LIGHT VAN	PARTNER (96-)	
	CITROEN LIGHT VAN	BERLINGO (96-)	
	PEUGEOT LIGHT VAN	PARTNER (96-)	
	CITROEN LIGHT VAN	C 15 (84-)	
61351	CITROEN LIGHT VAN	C 15 (84-)	R0727
	CITROEN LIGHT VAN	C 15 (84-)	
61353	CITROEN LIGHT VAN	C 15 (84-)	R0795
61357	CITROEN LIGHT VAN	C 15 (84-)	R0794
61390A	CITROEN LIGHT VAN	JUMPER (94-)	R1294
	CITROEN LIGHT VAN	JUMPER (94-)	
	CITROEN LIGHT VAN	JUMPER (02-)	
	CITROEN LIGHT VAN	RELAY (02-)	
	CITROEN LIGHT VAN	RELAY (94-)	
	CITROEN LIGHT VAN	RELAY (94-)	
	FIAT LIGHT VAN	DUCATO (94-)	
	FIAT LIGHT VAN	DUCATO (94-)	
61390A	FIAT LIGHT VAN	DUCATO (02-)	R1294
	PEUGEOT LIGHT VAN	BOXER (94-)	
	PEUGEOT LIGHT VAN	BOXER (94-)	
	PEUGEOT LIGHT VAN	BOXER (02-)	
	CITROEN LIGHT VAN	JUMPER (94-)	
	CITROEN LIGHT VAN	RELAY (94-)	
	FIAT LIGHT VAN	DUCATO (94-)	
	PEUGEOT LIGHT VAN	BOXER (94-)	
61396	FIAT LIGHT VAN	SCUDO (96-)	R1431
	PEUGEOT LIGHT VAN	EXPERT (95-)	
	FIAT LIGHT VAN	FIORINO (79-)	
	FIAT LIGHT VAN	DOBLO (01-)	
	FIAT LIGHT VAN	DOBLO (01-)	
	FIAT LIGHT VAN	DOBLO (01-)	
	FIAT LIGHT VAN	DOBLO (01-)	
61767	FIAT LIGHT VAN	DOBLO (01-)	R2876
61768	FIAT LIGHT VAN	DOBLO (01-)	R1438
61769	FIAT LIGHT VAN	DOBLO (01-)	R1529
61848	FIAT LIGHT VAN	FIORINO (88-)	R0463
	FIAT LIGHT VAN	FIORINO (88-)	
61853	FIAT LIGHT VAN	FIORINO (88-)	R1309
61860	FIAT LIGHT VAN	FIORINO (79-)	R0066
	CITROEN LIGHT VAN	JUMPER (94-)	
	CITROEN LIGHT VAN	RELAY (94-)	
61862	FIAT LIGHT VAN	DUCATO (94-)	R1427
	PEUGEOT LIGHT VAN	BOXER (94-)	
	FIAT LIGHT VAN	FIORINO (88-)	
	CITROEN LIGHT VAN	DISPATCH (95-)	

Nissens			DRAW.
61875A	CITROEN LIGHT VAN	DISPATCH (95-)	R1606
	CITROEN LIGHT VAN	JUMPY (95-)	
	CITROEN LIGHT VAN	JUMPY (95-)	
	FIAT LIGHT VAN	SCUDO (96-)	
	FIAT LIGHT VAN	SCUDO (96-)	
	PEUGEOT LIGHT VAN	EXPERT (95-)	
	PEUGEOT LIGHT VAN	EXPERT (95-)	
	FIAT LIGHT VAN	FIORINO (79-)	
	FIAT LIGHT VAN	FIORINO (88-)	
62003	FORD LIGHT VAN	MAVERICK (02-)	R3096
	MAZDA LIGHT VAN	TRIBUTE (02-)	
	FORD LIGHT VAN	MAVERICK (02-)	
	MAZDA LIGHT VAN	TRIBUTE (02-)	
62015A	FORD LIGHT VAN	TRANSIT CONNECT (02-)	R3010
62021A	FORD LIGHT VAN	TRANSIT CONNECT (02-)	R3011
62021A	FORD LIGHT VAN	TRANSIT CONNECT (02-)	R3011
62035	FORD USA LIGHT VAN	RANGER PICKUP (93-)	
62038	FORD USA LIGHT VAN	BRONCO (85-)	R3178
	FORD USA LIGHT VAN	BRONCO (92-)	
	FORD USA LIGHT VAN	F150 (92-)	
	FORD USA LIGHT VAN	F250 (92-)	
	FORD USA LIGHT VAN	F350 (92-)	
	FORD USA LIGHT VAN	F450 (92-)	
	FORD USA LIGHT VAN	RANGER (85-)	
62043A	FORD LIGHT VAN	TRANSIT (00-)	R2383
62043A	FORD LIGHT VAN	TRANSIT (00-)	R2383
62043A	FORD LIGHT VAN	TRANSIT (00-)	R2383
62044A	FORD LIGHT VAN	TRANSIT (00-)	R2381
62044A	FORD LIGHT VAN	TRANSIT (00-)	R2381
62046A	FORD LIGHT VAN	TRANSIT (00-)	R2384
62046A	FORD LIGHT VAN	TRANSIT (00-)	R2384
62048	FORD LIGHT VAN	TRANSIT (94-)	R2733
62049	FORD LIGHT VAN	TRANSIT (94-)	R2732
62057A	FORD LIGHT VAN	TRANSIT (94-)	R2215
62058A	FORD LIGHT VAN	TRANSIT (94-)	R2216
62060	FORD LIGHT VAN	EXPLORER (91-)	R3171
62061	FORD LIGHT VAN	EXPLORER (91-)	R3243
620671	FORD LIGHT VAN	EXPLORER (91-)	R2464
62067A	FORD LIGHT VAN	EXPLORER (91-)	R2464
62069A	FORD LIGHT VAN	MAVERICK (93-)	R2819
	NISSAN LIGHT VAN	TERRANO (93-)	
62070A	FORD LIGHT VAN	MAVERICK (93-)	R2731
	NISSAN LIGHT VAN	TERRANO (93-)	
62071	FORD LIGHT VAN	F-SERIE (83-)	R2082
	FORD LIGHT VAN	PICKUP F-SER (85-)	
62080A	FORD LIGHT VAN	TRANSIT (94-)	R2182
62081A	FORD LIGHT VAN	TRANSIT (94-)	R2184
62096	FORD USA LIGHT VAN	BRONCO (85-)	R1508
	FORD USA LIGHT VAN	RANGER (85-)	

NISSENS' REFERENCE LIST

Nissens			DRAW.
62098	FORD LIGHT VAN	PICKUP F-SER (85-)	R1503
	FORD USA LIGHT VAN	BRONCO (85-)	
	FORD USA LIGHT VAN	BRONCO (92-)	
	FORD USA LIGHT VAN	F150 (92-)	
	FORD USA LIGHT VAN	F250 (92-)	
	FORD USA LIGHT VAN	F350 (92-)	
	FORD USA LIGHT VAN	F450 (92-)	
	FORD USA LIGHT VAN	RANGER (85-)	
620981	FORD LIGHT VAN	PICKUP F-SER (85-)	R1503
	FORD USA LIGHT VAN	BRONCO (85-)	
	FORD USA LIGHT VAN	BRONCO (92-)	
	FORD USA LIGHT VAN	F150 (92-)	
	FORD USA LIGHT VAN	F250 (92-)	
	FORD USA LIGHT VAN	F350 (92-)	
	FORD USA LIGHT VAN	F450 (92-)	
	FORD USA LIGHT VAN	RANGER (85-)	
62103	FORD LIGHT VAN	PICKUP F-SER (85-)	R1504
	FORD USA LIGHT VAN	BRONCO (85-)	
	FORD USA LIGHT VAN	BRONCO (92-)	
	FORD USA LIGHT VAN	F150 (92-)	
	FORD USA LIGHT VAN	F250 (92-)	
	FORD USA LIGHT VAN	F350 (92-)	
	FORD USA LIGHT VAN	RANGER (85-)	
62108	FORD USA LIGHT VAN	AEROSTAR (85-)	R1342
62109	FORD USA LIGHT VAN	AEROSTAR (85-)	R1269
62156A	FORD LIGHT VAN	TRANSIT CONNECT (02-)	R0094
62156A	FORD LIGHT VAN	TRANSIT CONNECT (02-)	R0094
62177A	FORD LIGHT VAN	TRANSIT (92-)	R1099
62177A	FORD LIGHT VAN	TRANSIT (92-)	R1099
62178	FORD LIGHT VAN	SIERRA PICKUP (87-)	R1168
	FORD LIGHT VAN	SIERRA PICKUP (87-)	
62241A	FORD LIGHT VAN	TRANSIT (94-)	R1948
62243	FORD LIGHT VAN	TRANSIT (94-)	R3102
62246	FORD LIGHT VAN	RANGER (98-)	R3094
	MAZDA LIGHT VAN	B 2500 (96-)	
62246A	FORD LIGHT VAN	RANGER (98-)	R3094
	MAZDA LIGHT VAN	B 2500 (96-)	
62249A	FORD LIGHT VAN	TRANSIT (92-)	R1233
62340	FORD LIGHT VAN	TRANSIT (78-)	R0123
62366A	FORD LIGHT VAN	TRANSIT (86-)	R1399
62366A	FORD LIGHT VAN	TRANSIT (86-)	R1399
62367A	FORD LIGHT VAN	TRANSIT (86-)	R0748
62367A	FORD LIGHT VAN	TRANSIT (86-)	R0748
62369A	FORD LIGHT VAN	TRANSIT (86-)	R0989
62369A	FORD LIGHT VAN	TRANSIT (86-)	R0989
62370	FORD LIGHT VAN	TRANSIT (78-)	R0124
62371	FORD LIGHT VAN	TRANSIT (78-)	R0125
62381	MAZDA LIGHT VAN	E 2000 D (87-)	R1921
	MAZDA LIGHT VAN	E 2200 D (87-)	
62416	MAZDA LIGHT VAN	B 1600 (84-)	R1253
	MAZDA LIGHT VAN	B 2000 (84-)	
	MAZDA LIGHT VAN	B 2200 (84-)	
62417	MAZDA LIGHT VAN	B 2600 (89-)	R1254
62419	NISSAN LIGHT VAN	VANETTE (86-)	R1175
62422	NISSAN LIGHT VAN	VANETTE (86-)	R0871

Nissens			DRAW.
62435	MAZDA LIGHT VAN	MPV LV (95-)	R2191
62436	MAZDA LIGHT VAN	MPV LV (95-)	R2190
62461	MAZDA LIGHT VAN	B 2600 (84-)	R2200
62468	MAZDA LIGHT VAN	MPV LW (99-)	
62516	MERCEDES LIGHT VAN	MB 100 D (88-)	R0708
62519A	MERCEDES LIGHT VAN	SPRINTER (95-)	R2884
62559	MERCEDES LIGHT VAN	VITO W 638 (96-)	R2744
	MERCEDES LIGHT VAN	VITO W 638 (96-)	
62562	MERCEDES LIGHT VAN	VITO W 638 (96-)	R2886
	MERCEDES LIGHT VAN	VIANO W 639 (03-)	
62572	MERCEDES LIGHT VAN	VIANO W 639 (03-)	R3168
	MERCEDES LIGHT VAN	VITO W 639 (03-)	
62573	MERCEDES LIGHT VAN	VITO W 638 (96-)	R3156
	MERCEDES LIGHT VAN	VITO W 638 (96-)	
62574	MERCEDES LIGHT VAN	VITO W 638 (96-)	R3192
	MERCEDES LIGHT VAN	VITO W 638 (96-)	
62581	MERCEDES LIGHT VAN	207 D (77-)	R1153
	MERCEDES LIGHT VAN	307 D (77-)	
	MERCEDES LIGHT VAN	407 D (81-)	
	MERCEDES LIGHT VAN	409 D (77-)	
62597A	MERCEDES LIGHT VAN	SPRINTER (95-)	R2891
	MERCEDES LIGHT VAN	309 (68-)	
62630	MERCEDES LIGHT VAN	309 (68-)	R0152
62632	MERCEDES LIGHT VAN	207 D (77-)	R0456
	MERCEDES LIGHT VAN	209 D (76-)	
	MERCEDES LIGHT VAN	307 D (77-)	
	MERCEDES LIGHT VAN	309 D (68-)	
	MERCEDES LIGHT VAN	407 D (81-)	
	MERCEDES LIGHT VAN	409 D (77-)	
62633	MERCEDES LIGHT VAN	207 D (77-)	R0412
	MERCEDES LIGHT VAN	209 D (76-)	
	MERCEDES LIGHT VAN	307 D (77-)	
	MERCEDES LIGHT VAN	309 D (68-)	
	MERCEDES LIGHT VAN	407 D (81-)	
	MERCEDES LIGHT VAN	409 D (77-)	
62635	MERCEDES LIGHT VAN	207 D (77-)	R1643
	MERCEDES LIGHT VAN	209 D (76-)	
	MERCEDES LIGHT VAN	307 D (77-)	
	MERCEDES LIGHT VAN	309 D (68-)	
	MERCEDES LIGHT VAN	407 D (81-)	
	MERCEDES LIGHT VAN	409 D (77-)	
62655	MERCEDES LIGHT VAN	VITO W 638 (96-)	R2741
	MERCEDES LIGHT VAN	VITO W 638 (96-)	
62664A	MERCEDES LIGHT VAN	SPRINTER (95-)	R2047
62677	MERCEDES LIGHT VAN	VITO W 638 (96-)	R1845
	MERCEDES LIGHT VAN	VITO W 638 (96-)	
62678	MERCEDES LIGHT VAN	VITO W 638 (96-)	R1827
	MERCEDES LIGHT VAN	VITO W 638 (96-)	
62685A	MERCEDES LIGHT VAN	SPRINTER (95-)	R1617
62685A	MERCEDES LIGHT VAN	SPRINTER (95-)	R1617
62686A	MERCEDES LIGHT VAN	SPRINTER (95-)	R1616
62686A	MERCEDES LIGHT VAN	SPRINTER (95-)	R1616
62687A	MERCEDES LIGHT VAN	SPRINTER (95-)	R1615
62687A	MERCEDES LIGHT VAN	SPRINTER (95-)	R1615
62781A	MERCEDES LIGHT VAN	VANEO (02-)	R2399
	MERCEDES LIGHT VAN	VANEO (02-)	

NISSENS' REFERENCE LIST

Nissens			DRAW.
62801	MITSUBISHI LIGHT VAN MITSUBISHI LIGHT VAN	PAJERO (90-) SHOGUN (90-)	R3063
62802	MITSUBISHI LIGHT VAN MITSUBISHI LIGHT VAN	PAJERO (90-) SHOGUN (90-)	R3064
62807	MITSUBISHI LIGHT VAN	CANTER (86-)	R2975
62809	MITSUBISHI LIGHT VAN	L 200 (96-)	R2947
62815	MITSUBISHI LIGHT VAN	L 200 (83-)	R0375
62828	MITSUBISHI LIGHT VAN	L 300 (80-)	R1162
62840	MITSUBISHI LIGHT VAN	PAJERO (82-)	R1255
62842	MITSUBISHI LIGHT VAN	PAJERO (82-)	R1522
62842	MITSUBISHI LIGHT VAN	PAJERO (82-)	R1522
62852	MITSUBISHI LIGHT VAN MITSUBISHI LIGHT VAN	PAJERO (90-) SHOGUN (90-)	R1986
62853	MITSUBISHI LIGHT VAN MITSUBISHI LIGHT VAN	PAJERO (90-) SHOGUN (90-)	R1987
62856	MITSUBISHI LIGHT VAN	L 200 (87-)	R1831
62882	MITSUBISHI LIGHT VAN	PAJERO (82-)	R1618
62884	MITSUBISHI LIGHT VAN MITSUBISHI LIGHT VAN MITSUBISHI LIGHT VAN	PAJERO (82-) PAJERO (90-) SHOGUN (90-)	R2969
62892	MITSUBISHI LIGHT VAN	L 200 (96-)	R3183
62893	MITSUBISHI LIGHT VAN	OUTLANDER (03-)	
62895	MITSUBISHI LIGHT VAN	L 200 (96-)	R3090
62895A	MITSUBISHI LIGHT VAN	L 200 (96-)	R3282
62898	NISSAN LIGHT VAN	TRADE (85-)	R3252
62899	NISSAN LIGHT VAN	VANETTE (86-)	R3066
62902A	NISSAN LIGHT VAN NISSAN LIGHT VAN NISSAN LIGHT VAN	NOTE (06-) ATLEON (97-) ECO (97-)	R2991
62904	NISSAN LIGHT VAN NISSAN LIGHT VAN	ATLEON (97-) ECO (97-)	R2902
62906	NISSAN LIGHT VAN NISSAN LIGHT VAN	ATLEON (97-) ECO (97-)	R2903
62908A	NISSAN LIGHT VAN NISSAN LIGHT VAN	VANETTE (92-) VANETTE (92-)	R2941
62910	NISSAN LIGHT VAN	PATROL (79-)	R2160
62911	NISSAN LIGHT VAN	PATROL (79-)	R2161
62912	NISSAN LIGHT VAN	PATROL Y60 (88-)	R2162
62913	NISSAN LIGHT VAN	PATROL Y60 (88-)	R2163
62915	NISSAN LIGHT VAN	PATROL (79-)	R2165
62916	NISSAN LIGHT VAN	PATHFINDER (97-)	R2075
62921A	NISSAN LIGHT VAN NISSAN LIGHT VAN	VANETTE CARGO (95-) VANETTE (92-)	R2278
62929	NISSAN LIGHT VAN NISSAN LIGHT VAN NISSAN LIGHT VAN NISSAN LIGHT VAN	KING CAB D21 (85-) PICK UP D21 (85-) TERRANO (86-) TERRANO (86-)	R1082
62929	NISSAN LIGHT VAN NISSAN LIGHT VAN NISSAN LIGHT VAN NISSAN LIGHT VAN	TERRANO (87-) KING CAB 720 (82-) PICK UP 720 (82-) KING CAB 720 (82-)	R1082
62931	NISSAN LIGHT VAN NISSAN LIGHT VAN	PICK UP 720 (82-) KING CAB 720 (82-)	R0377

Nissens			DRAW.
62934	NISSAN LIGHT VAN NISSAN LIGHT VAN	PICK UP 720 (82-) VANETTE (86-)	R0587
62953A	NISSAN LIGHT VAN NISSAN LIGHT VAN	PATROL Y61 (97-) SAFARI Y61 (97-)	R1397
62958	NISSAN LIGHT VAN	PATROL Y60 (88-)	R1518
62959	NISSAN LIGHT VAN	PATROL Y60 (88-)	R1794
62959	NISSAN LIGHT VAN	PATROL Y60 (88-)	R1794
62976A	NISSAN LIGHT VAN NISSAN LIGHT VAN	VANETTE CARGO (95-) VANETTE CARGO (95-)	R2335
62983A	NISSAN LIGHT VAN NISSAN LIGHT VAN	VANETTE (92-) TERRANO (86-)	R2272
62988	NISSAN LIGHT VAN NISSAN LIGHT VAN	KING CAB D21 (85-) PICK UP D21 (85-)	R1830
63002	OPEL LIGHT VAN OPEL LIGHT VAN	MONTEREY (91-) COMBO (00-)	R2317
63008A	OPEL LIGHT VAN OPEL LIGHT VAN PONTIAC LIGHT VAN PONTIAC LIGHT VAN	COMBO (00-) COMBO (00-) G6 (05-) G6 (05-)	R2449
63023A	PONTIAC LIGHT VAN NISSAN LIGHT VAN OPEL LIGHT VAN OPEL LIGHT VAN RENAULT LIGHT VAN RENAULT LIGHT VAN NISSAN LIGHT VAN OPEL LIGHT VAN	G6 (05-) PRIMASTAR (02-) VIVARO (01-) VIVARO (01-) TRAFIC (01-) TRAFIC (01-) PRIMASTAR (02-) VIVARO (01-)	R2707
63026	RENAULT LIGHT VAN OPEL LIGHT VAN OPEL LIGHT VAN	TRAFIC (01-) FRONTERA A (92-) COMBO (00-)	R2700
63113A	PONTIAC LIGHT VAN PONTIAC LIGHT VAN OPEL LIGHT VAN OPEL LIGHT VAN OPEL LIGHT VAN LDV (96-) LIGHT VAN OPEL LIGHT VAN	G6 (05-) G6 (05-) FRONTERA A (92-) FRONTERA A (92-) COMBO (93-) CONVOY (98-) COMBO (93-)	R3286
63285A	OPEL LIGHT VAN OPEL LIGHT VAN OPEL LIGHT VAN OPEL LIGHT VAN CITROEN LIGHT VAN	COMBO (93-) COMBO (93-) COMBO (93-) FRONTERA A (92-) BERLINGO (96-)	R1418
63508A	PEUGEOT LIGHT VAN CITROEN LIGHT VAN PEUGEOT LIGHT VAN CITROEN LIGHT VAN	PARTNER (96-) BERLINGO (96-) PARTNER (96-) BERLINGO (96-)	R2004
63546	PEUGEOT LIGHT VAN CITROEN LIGHT VAN	PARTNER (96-) BERLINGO (96-)	R1853
63547	PEUGEOT LIGHT VAN CITROEN LIGHT VAN	PARTNER (96-) C 25 (81-)	R1854
63557	FIAT LIGHT VAN FIAT LIGHT VAN PEUGEOT LIGHT VAN TALBOT LIGHT VAN CITROEN LIGHT VAN	DUCATO (81-) TALENTO (89-) J5 (81-) EXPRESS (81-) C 25 (81-)	R0354
63558	FIAT LIGHT VAN PEUGEOT LIGHT VAN TALBOT LIGHT VAN CITROEN LIGHT VAN FIAT LIGHT VAN FIAT LIGHT VAN	DUCATO (81-) J5 (81-) EXPRESS (81-) C 25 (81-) DUCATO (81-) TALENTO (89-)	R0359

NISSENS' REFERENCE LIST

Nissens			DRAW.
63561	PEUGEOT LIGHT VAN	J5 (81-)	R0774
	TALBOT LIGHT VAN	EXPRESS (81-)	
	PEUGEOT LIGHT VAN	J7 (70-)	
	PEUGEOT LIGHT VAN	J7 (78-)	
	PEUGEOT LIGHT VAN	J9 (70-)	
63562	PEUGEOT LIGHT VAN	J9 (78-)	R1050
	CITROEN LIGHT VAN	C 25 (81-)	
	FIAT LIGHT VAN	DUCATO (81-)	
	CITROEN LIGHT VAN	C 25 (81-)	
63572	FIAT LIGHT VAN	DUCATO (81-)	R0776
	PEUGEOT LIGHT VAN	J5 (81-)	
	TALBOT LIGHT VAN	EXPRESS (81-)	
	CITROEN LIGHT VAN	LNA (82-)	
	CITROEN LIGHT VAN	BERLINGO (02-)	
63692A	PEUGEOT LIGHT VAN	PARTNER (02-)	
	CITROEN LIGHT VAN	BERLINGO (96-)	
	PEUGEOT LIGHT VAN	PARTNER (96-)	
	CITROEN LIGHT VAN	BERLINGO (96-)	
	PEUGEOT LIGHT VAN	PARTNER (96-)	
63719A	CITROEN LIGHT VAN	BERLINGO (02-)	R2689
	PEUGEOT LIGHT VAN	PARTNER (02-)	
	VOLKSWAGEN LIGHT VAN	TOUAREG (02-)	
	VOLKSWAGEN LIGHT VAN	TOUAREG (02-)	
	VOLKSWAGEN LIGHT VAN	TOUAREG (02-)	
63758	VOLKSWAGEN LIGHT VAN	TOUAREG (02-)	R2910
	VOLKSWAGEN LIGHT VAN	TOUAREG (02-)	
63758	VOLKSWAGEN LIGHT VAN	TOUAREG (02-)	R2910
	NISSAN LIGHT VAN	INTERSTAR (02-)	
63761	OPEL LIGHT VAN	ARENA (98-)	R3270
	OPEL LIGHT VAN	MOVANO (98-)	
	RENAULT LIGHT VAN	MASTER (98-)	
	NISSAN LIGHT VAN	KUBISTAR (03-)	
63762	NISSAN LIGHT VAN	KUBISTAR (03-)	R2665
	RENAULT LIGHT VAN	KANGOO (98-)	
63762	RENAULT LIGHT VAN	KANGOO (98-)	R2665
	NISSAN LIGHT VAN	KUBISTAR (03-)	
63763	RENAULT LIGHT VAN	KANGOO (98-)	R2657
	RENAULT LIGHT VAN	KANGOO (98-)	
637931	NISSAN LIGHT VAN	KUBISTAR (03-)	R2668
	RENAULT LIGHT VAN	KANGOO (98-)	
	RENAULT LIGHT VAN	KANGOO (98-)	
	RENAULT LIGHT VAN	TRAFIC (97-)	
	NISSAN LIGHT VAN	KUBISTAR (03-)	
	RENAULT LIGHT VAN	KANGOO (98-)	
	NISSAN LIGHT VAN	KUBISTAR (03-)	
	RENAULT LIGHT VAN	KANGOO (98-)	
63809	NISSAN LIGHT VAN	KUBISTAR (03-)	R2669
	RENAULT LIGHT VAN	KANGOO (98-)	
	RENAULT LIGHT VAN	KANGOO (98-)	
	NISSAN LIGHT VAN	INTERSTAR (02-)	
	OPEL LIGHT VAN	ARENA (98-)	
	OPEL LIGHT VAN	MOVANO (98-)	
63812A	RENAULT LIGHT VAN	MASTER (98-)	R2463
	NISSAN LIGHT VAN	PRIMASTAR (02-)	
	OPEL LIGHT VAN	VIVARO (01-)	
	RENAULT LIGHT VAN	TRAFIC (01-)	
63818	NISSAN LIGHT VAN	PRIMASTAR (02-)	R2917
	OPEL LIGHT VAN	VIVARO (01-)	
	RENAULT LIGHT VAN	TRAFIC (01-)	
63819	NISSAN LIGHT VAN	INTERSTAR (02-)	R2918
	OPEL LIGHT VAN	MOVANO (98-)	
	RENAULT LIGHT VAN	MASTER (98-)	

Nissens			DRAW.
63823	NISSAN LIGHT VAN	INTERSTAR (02-)	R2919
	OPEL LIGHT VAN	ARENA (98-)	
	OPEL LIGHT VAN	MOVANO (98-)	
	RENAULT LIGHT VAN	MASTER (98-)	
63824A	NISSAN LIGHT VAN	INTERSTAR (02-)	R2920
	OPEL LIGHT VAN	ARENA (98-)	
	OPEL LIGHT VAN	MOVANO (98-)	
	RENAULT LIGHT VAN	MASTER (98-)	
63834	RENAULT LIGHT VAN	TRAFIC (89-)	R2747
63850	RENAULT LIGHT VAN	TRAFIC (80-)	R0229
	NISSAN LIGHT VAN	KUBISTAR (03-)	
	RENAULT LIGHT VAN	KANGOO (98-)	
63855A	RENAULT LIGHT VAN	KANGOO (98-)	R2210
	RENAULT LIGHT VAN	TRAFIC (80-)	
	RENAULT LIGHT VAN	EXPRESS (85-)	
63867	RENAULT LIGHT VAN	EXTRA (85-)	R0995
	RENAULT LIGHT VAN	RAPID (85-)	
	RENAULT LIGHT VAN	TRAFIC (80-)	
	RENAULT LIGHT VAN	TRAFIC (80-)	
	NISSAN LIGHT VAN	KUBISTAR (03-)	
63884	RENAULT LIGHT VAN	KANGOO (98-)	R0693
	RENAULT LIGHT VAN	KANGOO (98-)	
	RENAULT LIGHT VAN	TRAFIC (89-)	
63892	RENAULT LIGHT VAN	EXPRESS (91-)	R0620
	RENAULT LIGHT VAN	EXTRA (91-)	
	RENAULT LIGHT VAN	RAPID (91-)	
63894	RENAULT LIGHT VAN	EXPRESS (91-)	R0612
	RENAULT LIGHT VAN	EXTRA (91-)	
	RENAULT LIGHT VAN	RAPID (91-)	
63900	RENAULT LIGHT VAN	TRAFIC (80-)	R0234
63900	RENAULT LIGHT VAN	TRAFIC (80-)	R0234
63906	RENAULT LIGHT VAN	TRAFIC (89-)	R0782
	RENAULT LIGHT VAN	TRAFIC (89-)	
63912A	RENAULT LIGHT VAN	TRAFIC (89-)	R0975
	RENAULT LIGHT VAN	TRAFIC (97-)	
63921A	RENAULT LIGHT VAN	RAPID (91-)	R0966
63922	OPEL LIGHT VAN	ARENA (98-)	R2760
	OPEL LIGHT VAN	MOVANO (98-)	
	RENAULT LIGHT VAN	MASTER (98-)	
63924A	RENAULT LIGHT VAN	EXPRESS (91-)	R0625
	RENAULT LIGHT VAN	EXTRA (91-)	
	RENAULT LIGHT VAN	RAPID (91-)	
	RENAULT LIGHT VAN	EXPRESS (91-)	
	RENAULT LIGHT VAN	EXTRA (91-)	
63934A	RENAULT LIGHT VAN	EXPRESS (85-)	R1671
	RENAULT LIGHT VAN	EXTRA (85-)	
	RENAULT LIGHT VAN	RAPID (85-)	
	RENAULT LIGHT VAN	MASTER (98-)	
	NISSAN LIGHT VAN	INTERSTAR (02-)	
63936A	OPEL LIGHT VAN	ARENA (98-)	R2122
	OPEL LIGHT VAN	MOVANO (98-)	
	RENAULT LIGHT VAN	MASTER (98-)	
	NISSAN LIGHT VAN	KUBISTAR (03-)	
639371	RENAULT LIGHT VAN	KANGOO (98-)	R1812
	NISSAN LIGHT VAN	KUBISTAR (03-)	
	RENAULT LIGHT VAN	KANGOO (98-)	
	RENAULT LIGHT VAN	MASTER (80-)	
	RENAULT LIGHT VAN	MASTER (80-)	
	RENAULT LIGHT VAN	TRAFIC (89-)	
	RENAULT LIGHT VAN	EXPRESS (91-)	
	RENAULT LIGHT VAN	EXTRA (91-)	
	RENAULT LIGHT VAN	RAPID (91-)	
	RENAULT LIGHT VAN	TRAFIC (80-)	

NISSENS' REFERENCE LIST

Nissens			DRAW.
63952	RENAULT LIGHT VAN	B (83-)	R0635
63952	RENAULT LIGHT VAN	B (83-)	R0635
63968A	RENAULT LIGHT VAN	EXPRESS (91-)	R1910
	RENAULT LIGHT VAN	EXTRA (91-)	
	RENAULT LIGHT VAN	RAPID (91-)	
	NISSAN LIGHT VAN	KUBISTAR (03-)	
63985	RENAULT LIGHT VAN	KANGOO (98-)	R2123
	RENAULT LIGHT VAN	B (83-)	
63990	RENAULT LIGHT VAN	RODEO (70-)	R0388
	SEAT LIGHT VAN	INCA (95-)	
	SEAT LIGHT VAN	INCA (95-)	
639951	SEAT LIGHT VAN	INCA (95-)	R1447
	SEAT LIGHT VAN	INCA (95-)	
	SEAT LIGHT VAN	INCA (95-)	
	SEAT LIGHT VAN	INCA (95-)	
	VOLKSWAGEN LIGHT VAN	CADDY (95-)	
639951	VOLKSWAGEN LIGHT VAN	CADDY (95-)	R1447
	VOLKSWAGEN LIGHT VAN	CADDY (95-)	
	VOLKSWAGEN LIGHT VAN	CADDY (95-)	
	VOLKSWAGEN LIGHT VAN	CADDY (95-)	
	VOLKSWAGEN LIGHT VAN	CADDY (95-)	
63995A	SEAT LIGHT VAN	INCA (95-)	R1447
	SEAT LIGHT VAN	INCA (95-)	
	SEAT LIGHT VAN	INCA (95-)	
	SEAT LIGHT VAN	INCA (95-)	
	SEAT LIGHT VAN	INCA (95-)	
	SEAT LIGHT VAN	INCA (95-)	
63995A	VOLKSWAGEN LIGHT VAN	CADDY (95-)	R1447
	VOLKSWAGEN LIGHT VAN	CADDY (95-)	
	VOLKSWAGEN LIGHT VAN	CADDY (95-)	
	VOLKSWAGEN LIGHT VAN	CADDY (95-)	
	VOLKSWAGEN LIGHT VAN	CADDY (95-)	
	VOLKSWAGEN LIGHT VAN	CADDY (95-)	
639961	SEAT LIGHT VAN	INCA (95-)	R14461
	VOLKSWAGEN LIGHT VAN	CADDY (95-)	
	SEAT LIGHT VAN	INCA (95-)	
	VOLKSWAGEN LIGHT VAN	CADDY (95-)	
	TOYOTA LIGHT VAN	HI-LUX (01-)	
	TOYOTA LIGHT VAN	HI-LUX (84-)	
	TOYOTA LIGHT VAN	HI-LUX (84-)	
64622A	TOYOTA LIGHT VAN	TACOMA (95-)	R2761
64623A	TOYOTA LIGHT VAN	TACOMA (95-)	R2762
64624A	TOYOTA LIGHT VAN	TACOMA (95-)	R2763
64626A	TOYOTA LIGHT VAN	4 RUNNER (95-)	R2378
	TOYOTA LIGHT VAN	LAND CRUISER 90 (96-)	
64627A	TOYOTA LIGHT VAN	SIENNA (97-)	R2837
64636A	TOYOTA LIGHT VAN	LAND CRUISER 90 (96-)	R2577
64637A	TOYOTA LIGHT VAN	LAND CRUISER 90 (96-)	R2578
64649A	TOYOTA LIGHT VAN	HI-ACE (01-)	R2968
64650	TOYOTA LIGHT VAN	LAND CRUISER 70 (84-)	R3033
64661	TOYOTA LIGHT VAN	LAND CRUISER PRADO (02-)	
	TOYOTA LIGHT VAN	HI-LUX (97-)	
64707	TOYOTA LIGHT VAN	LITE-ACE (92-)	R2929
64708	TOYOTA LIGHT VAN	LITE-ACE (85-)	R3132
64709	TOYOTA LIGHT VAN	LITE-ACE (85-)	R2749
64728	TOYOTA LIGHT VAN	4 RUNNER (85-)	R0588
	TOYOTA LIGHT VAN	HI-LUX (84-)	
	TOYOTA LIGHT VAN	HI-LUX (88-)	
64733	TOYOTA LIGHT VAN	HI-ACE (84-)	R1118

Nissens			DRAW.
64737	TOYOTA LIGHT VAN	HI-ACE (89-)	R1936
64751	TOYOTA LIGHT VAN	DYNA 200 (95-)	R2061
64752	TOYOTA LIGHT VAN	DYNA 200 (95-)	R2062
647551	TOYOTA LIGHT VAN	4 RUNNER (95-)	R2377
	TOYOTA LIGHT VAN	LAND CRUISER 90 (96-)	
64755A	TOYOTA LIGHT VAN	4 RUNNER (95-)	R2377
	TOYOTA LIGHT VAN	LAND CRUISER 90 (96-)	
64774	TOYOTA LIGHT VAN	HI-ACE (89-)	R1942
64778	TOYOTA LIGHT VAN	HI-ACE (89-)	R1982
64808	TOYOTA LIGHT VAN	HI-ACE (89-)	
64817	TOYOTA LIGHT VAN	LAND CRUISER 100 (98-)	R3313
64817	TOYOTA LIGHT VAN	LAND CRUISER 100 (98-)	R3313
64818	TOYOTA LIGHT VAN	LAND CRUISER 100 (98-)	R3314
64844	TOYOTA LIGHT VAN	4 RUNNER (85-)	R1723
64845	TOYOTA LIGHT VAN	HI-LUX (88-)	R1724
	VOLKSWAGEN LIGHT VAN	TARO (89-)	
64846	TOYOTA LIGHT VAN	4 RUNNER (85-)	R1840
	TOYOTA LIGHT VAN	HI-LUX (88-)	
64847	TOYOTA LIGHT VAN	4 RUNNER (85-)	R1725
	TOYOTA LIGHT VAN	HI-LUX (88-)	
64848	TOYOTA LIGHT VAN	4 RUNNER (85-)	R1974
64857A	TOYOTA LIGHT VAN	HI-ACE (95-)	R1946
64858A	TOYOTA LIGHT VAN	HI-ACE (95-)	R1945
64858A	TOYOTA LIGHT VAN	HI-ACE (95-)	R1945
64859A	TOYOTA LIGHT VAN	HI-ACE (95-)	R2201
64861	TOYOTA LIGHT VAN	LAND CRUISER 80 (90-)	R3212
64862	TOYOTA LIGHT VAN	HI-ACE (89-)	R1950
64865	TOYOTA LIFT	6FG20	
64869	TOYOTA LIGHT VAN	4 RUNNER (85-)	R3276
64881	TOYOTA LIGHT VAN	LAND CRUISER 100 (98-)	
64881	TOYOTA LIGHT VAN	LAND CRUISER 100 (98-)	
64882	TOYOTA LIGHT VAN	LAND CRUISER 100 (98-)	R3210
651511	VOLKSWAGEN LIGHT VAN	CADDY (82-)	R07321
	VOLKSWAGEN LIGHT VAN	CADDY (82-)	
	VOLKSWAGEN LIGHT VAN	CADDY (82-)	
	VOLKSWAGEN LIGHT VAN	CADDY (82-)	
	VOLKSWAGEN LIGHT VAN	CADDY (82-)	
	VOLKSWAGEN LIGHT VAN	CADDY (82-)	
	VOLKSWAGEN LIGHT VAN	CADDY (82-)	
	VOLKSWAGEN LIGHT VAN	CADDY (82-)	
65151A	VOLKSWAGEN LIGHT VAN	CADDY (82-)	R0732
	VOLKSWAGEN LIGHT VAN	CADDY (82-)	
	VOLKSWAGEN LIGHT VAN	TRANSPORTER T4 (90-)	
	VOLKSWAGEN LIGHT VAN	TRANSPORTER T4 (90-)	
	VOLKSWAGEN LIGHT VAN	TRANSPORTER T4 (90-)	
	VOLKSWAGEN LIGHT VAN	TRANSPORTER T4 (90-)	
	VOLKSWAGEN LIGHT VAN	TRANSPORTER T4 (90-)	
	VOLKSWAGEN LIGHT VAN	TRANSPORTER T4 (90-)	
65221	VOLKSWAGEN LIGHT VAN	LT (82-)	R0311
65221	VOLKSWAGEN LIGHT VAN	LT (82-)	R0311
65221	VOLKSWAGEN LIGHT VAN	LT (82-)	R0311
65230	VOLKSWAGEN LIGHT VAN	TRANSPORTER T3 (79-)	R0312

NISSENS' REFERENCE LIST

Nissens			DRAW.
65231	VOLKSWAGEN LIGHT VAN	LT (96-)	R2622
	VOLKSWAGEN LIGHT VAN	LT (96-)	
65231	VOLKSWAGEN LIGHT VAN	LT (03-)	R2622
	VOLKSWAGEN LIGHT VAN	LT (96-)	
65231A	VOLKSWAGEN LIGHT VAN	LT (96-)	R2622
	VOLKSWAGEN LIGHT VAN	LT (03-)	
65238A	VOLKSWAGEN LIGHT VAN	TRANSPORTER T4 (90-)	R1848
65238A	VOLKSWAGEN LIGHT VAN	TRANSPORTER T4 (90-)	R1848
65238A	VOLKSWAGEN LIGHT VAN	TRANSPORTER T4 (90-)	R1848
65238A	VOLKSWAGEN LIGHT VAN	TRANSPORTER T4 (90-)	R1848
65238A	VOLKSWAGEN LIGHT VAN	TRANSPORTER T4 (90-)	R1848
65238A	VOLKSWAGEN LIGHT VAN	TRANSPORTER T4 (90-)	R1848
65238A	VOLKSWAGEN LIGHT VAN	TRANSPORTER T4 (90-)	R1848
65238A	VOLKSWAGEN LIGHT VAN	TRANSPORTER T4 (90-)	R1848
65238A	VOLKSWAGEN LIGHT VAN	TRANSPORTER T4 (90-)	R1848
65238A	VOLKSWAGEN LIGHT VAN	TRANSPORTER T4 (90-)	R1848
65238A	VOLKSWAGEN LIGHT VAN	TRANSPORTER T4 (90-)	R1848
65238A	VOLKSWAGEN LIGHT VAN	TRANSPORTER T4 (90-)	R1848
65238A	VOLKSWAGEN LIGHT VAN	TRANSPORTER T4 (90-)	R1848
65238A	VOLKSWAGEN LIGHT VAN	TRANSPORTER T4 (90-)	R1848
65238A	VOLKSWAGEN LIGHT VAN	TRANSPORTER T4 (90-)	R1848
65239	VOLKSWAGEN LIGHT VAN	TRANSPORTER T3 (79-)	R0196
65239	VOLKSWAGEN LIGHT VAN	TRANSPORTER T3 (79-)	R0196
65242A	VOLKSWAGEN LIGHT VAN	TRANSPORTER T4 (90-)	R0719
65242A	VOLKSWAGEN LIGHT VAN	TRANSPORTER T4 (90-)	R0719
65242A	VOLKSWAGEN LIGHT VAN	TRANSPORTER T4 (90-)	R0719
65242A	VOLKSWAGEN LIGHT VAN	TRANSPORTER T4 (90-)	R0719
65242A	VOLKSWAGEN LIGHT VAN	TRANSPORTER T4 (90-)	R0719
65242A	VOLKSWAGEN LIGHT VAN	TRANSPORTER T4 (90-)	R0719
65242A	VOLKSWAGEN LIGHT VAN	TRANSPORTER T4 (90-)	R0719
65242A	VOLKSWAGEN LIGHT VAN	TRANSPORTER T4 (90-)	R0719
65242A	VOLKSWAGEN LIGHT VAN	TRANSPORTER T4 (90-)	R0719
65242A	VOLKSWAGEN LIGHT VAN	TRANSPORTER T4 (90-)	R0719
65242A	VOLKSWAGEN LIGHT VAN	TRANSPORTER T4 (90-)	R0719
65242A	VOLKSWAGEN LIGHT VAN	TRANSPORTER T4 (90-)	R0719
65242A	VOLKSWAGEN LIGHT VAN	TRANSPORTER T4 (90-)	R0719
65242A	VOLKSWAGEN LIGHT VAN	TRANSPORTER T4 (90-)	R0719
65244A	SEAT LIGHT VAN	INCA (95-)	R1225
	SEAT LIGHT VAN	INCA (95-)	
	SEAT LIGHT VAN	INCA (95-)	
	SEAT LIGHT VAN	INCA (95-)	
	SEAT LIGHT VAN	INCA (95-)	
	SEAT LIGHT VAN	INCA (95-)	

Nissens			DRAW.
65244A	VOLKSWAGEN LIGHT VAN	CADDY (95-)	R1225
	VOLKSWAGEN LIGHT VAN	CADDY (95-)	
	SEAT LIGHT VAN	INCA (95-)	
	SEAT LIGHT VAN	INCA (95-)	
	VOLKSWAGEN LIGHT VAN	CADDY (95-)	
	VOLKSWAGEN LIGHT VAN	CADDY (95-)	
652451	VOLKSWAGEN LIGHT VAN	CADDY (95-)	R1226
	VOLKSWAGEN LIGHT VAN	CADDY (95-)	
	VOLKSWAGEN LIGHT VAN	CADDY (95-)	
	SEAT LIGHT VAN	INCA (95-)	
	SEAT LIGHT VAN	INCA (95-)	
	VOLKSWAGEN LIGHT VAN	CADDY (95-)	
	VOLKSWAGEN LIGHT VAN	CADDY (95-)	
	VOLKSWAGEN LIGHT VAN	CADDY (95-)	
	VOLKSWAGEN LIGHT VAN	CADDY (95-)	
	VOLKSWAGEN LIGHT VAN	CADDY (95-)	
	SEAT LIGHT VAN	INCA (95-)	
	SEAT LIGHT VAN	INCA (95-)	
	VOLKSWAGEN LIGHT VAN	CADDY (95-)	
	VOLKSWAGEN LIGHT VAN	CADDY (95-)	
	VOLKSWAGEN LIGHT VAN	CADDY (95-)	
	VOLKSWAGEN LIGHT VAN	CADDY (95-)	
	VOLKSWAGEN LIGHT VAN	CADDY (95-)	
65255A	SEAT LIGHT VAN	INCA (95-)	R1395
	SEAT LIGHT VAN	INCA (95-)	
	VOLKSWAGEN LIGHT VAN	CADDY (95-)	
	VOLKSWAGEN LIGHT VAN	CADDY (95-)	
	VOLKSWAGEN LIGHT VAN	CADDY (95-)	
	VOLKSWAGEN LIGHT VAN	CADDY (95-)	
	VOLKSWAGEN LIGHT VAN	CADDY (95-)	
65264	VOLKSWAGEN LIGHT VAN	CADDY (82-)	R0780
	VOLKSWAGEN LIGHT VAN	CADDY (82-)	
652681	SEAT LIGHT VAN	INCA (95-)	R1870
	VOLKSWAGEN LIGHT VAN	CADDY (95-)	
	SEAT LIGHT VAN	INCA (95-)	
	VOLKSWAGEN LIGHT VAN	CADDY (95-)	
	VOLKSWAGEN LIGHT VAN	TRANSPORTER T4 (90-)	
	VOLKSWAGEN LIGHT VAN	TRANSPORTER T4 (90-)	
65273	VOLKSWAGEN LIGHT VAN	TRANSPORTER T4 (90-)	R0719
65273	VOLKSWAGEN LIGHT VAN	TRANSPORTER T4 (90-)	R0719
65273	VOLKSWAGEN LIGHT VAN	TRANSPORTER T4 (90-)	R0719
65273	VOLKSWAGEN LIGHT VAN	TRANSPORTER T4 (90-)	R0719
65273	VOLKSWAGEN LIGHT VAN	TRANSPORTER T4 (90-)	R0719
65273	VOLKSWAGEN LIGHT VAN	TRANSPORTER T4 (90-)	R0719
65273	VOLKSWAGEN LIGHT VAN	TRANSPORTER T4 (90-)	R0719
65273	VOLKSWAGEN LIGHT VAN	TRANSPORTER T4 (90-)	R0719
65273	VOLKSWAGEN LIGHT VAN	TRANSPORTER T4 (90-)	R0719
65273	VOLKSWAGEN LIGHT VAN	TRANSPORTER T4 (90-)	R0719
65273	VOLKSWAGEN LIGHT VAN	TRANSPORTER T4 (90-)	R0719
65273	VOLKSWAGEN LIGHT VAN	TRANSPORTER T4 (90-)	R0719
65273	VOLKSWAGEN LIGHT VAN	TRANSPORTER T4 (90-)	R0719
65275	VOLKSWAGEN LIGHT VAN	TOUAREG (02-)	R2930
65275	VOLKSWAGEN LIGHT VAN	TOUAREG (02-)	R2930
65276	VOLKSWAGEN LIGHT VAN	TOUAREG (02-)	R2931
	VOLKSWAGEN LIGHT VAN	TOUAREG (02-)	
65276	VOLKSWAGEN LIGHT VAN	TOUAREG (02-)	R2931
	VOLKSWAGEN LIGHT VAN	CADDY (04-)	

NISSENS' REFERENCE LIST

Nissens			DRAW.
65277	VOLKSWAGEN LIGHT VAN	CADDY (04-)	R3214
	VOLKSWAGEN LIGHT VAN	CADDY (04-)	
	VOLKSWAGEN LIGHT VAN	TOURAN (03-)	
	VOLKSWAGEN LIGHT VAN	CADDY (04-)	
	VOLKSWAGEN LIGHT VAN	CADDY (04-)	
	VOLKSWAGEN LIGHT VAN	CADDY (04-)	
	VOLKSWAGEN LIGHT VAN	TOURAN (03-)	
65278	VOLKSWAGEN LIGHT VAN	TOURAN (03-)	R3215
	VOLKSWAGEN LIGHT VAN	TOURAN (03-)	
	VOLKSWAGEN LIGHT VAN	TOURAN (03-)	
	VOLKSWAGEN LIGHT VAN	CADDY (04-)	
65280A	VOLKSWAGEN LIGHT VAN	TOURAN (03-)	
	VOLKSWAGEN LIGHT VAN	TOURAN (03-)	
	VOLKSWAGEN LIGHT VAN	TOURAN (03-)	
	VOLKSWAGEN LIGHT VAN	TRANSPORTER T5 (03-)	
	VOLKSWAGEN LIGHT VAN	TRANSPORTER T5 (03-)	
65282A	VOLKSWAGEN LIGHT VAN	TRANSPORTER T5 (03-)	
65283A	VOLKSWAGEN LIGHT VAN	TRANSPORTER T5 (03-)	
65283A	VOLKSWAGEN LIGHT VAN	TRANSPORTER T5 (03-)	
65283A	VOLKSWAGEN LIGHT VAN	TRANSPORTER T5 (03-)	
65284A	VOLKSWAGEN LIGHT VAN	TRANSPORTER T5 (03-)	
65284A	VOLKSWAGEN LIGHT VAN	TRANSPORTER T5 (03-)	
65290	SEAT LIGHT VAN	INCA (95-)	R3038
	SEAT LIGHT VAN	INCA (95-)	
	SEAT LIGHT VAN	INCA (95-)	
65290	VOLKSWAGEN LIGHT VAN	CADDY (95-)	R3038
	VOLKSWAGEN LIGHT VAN	CADDY (95-)	
	VOLKSWAGEN LIGHT VAN	CADDY (95-)	
65290	VOLKSWAGEN LIGHT VAN	CADDY (95-)	R3038
	KIA LIGHT VAN	K-SERIE (01-)	
	KIA LIGHT VAN	K-SERIE (01-)	
66646	KIA LIGHT VAN	K-SERIE (01-)	R2778
66670	KIA LIGHT VAN	K-SERIE (01-)	
67015	HYUNDAI LIGHT VAN	H-100 PORTER (93-)	R2242
	HYUNDAI LIGHT VAN	GALLOPER (91-)	
67018	HYUNDAI LIGHT VAN	GALLOPER (91-)	R2237
67034	HYUNDAI LIGHT VAN	H-100 MINI BUS (93-)	R2598
	HYUNDAI LIGHT VAN	H-100 MINI BUS (93-)	
67035	HYUNDAI LIGHT VAN	H-100 MINI BUS (93-)	R2599
	HYUNDAI LIGHT VAN	H-200 (97-)	
67037	HYUNDAI LIGHT VAN	H1 (97-)	R2600
	HYUNDAI LIGHT VAN	H-200 (97-)	
67038	HYUNDAI LIGHT VAN	H1 (97-)	R2601
	HYUNDAI LIGHT VAN	H1 (97-)	
670381	HYUNDAI LIGHT VAN	H1 (97-)	R2601
670381	HYUNDAI LIGHT VAN	H1 (97-)	R2601
67039	HYUNDAI LIGHT VAN	H-200 (97-)	R2602
	HYUNDAI LIGHT VAN	H1 (97-)	
67040	HYUNDAI LIGHT VAN	H-200 (97-)	R2603
	HYUNDAI LIGHT VAN	H1 (97-)	
670401	HYUNDAI LIGHT VAN	H1 (97-)	R2603
67041	HYUNDAI LIGHT VAN	H-200 (97-)	R2604
67042	HYUNDAI LIGHT VAN	H-200 (97-)	R2605
67043	HYUNDAI LIGHT VAN	GALLOPER (91-)	R2606
67046	HYUNDAI LIGHT VAN	GALLOPER (91-)	R2404
	HYUNDAI LIGHT VAN	GALLOPER (98-)	

Nissens			DRAW.
67047	HYUNDAI LIGHT VAN	GALLOPER (91-)	R2340
673001	VOLKSWAGEN LIGHT VAN	CADDY (95-)	R2361
	VOLKSWAGEN LIGHT VAN	CADDY (95-)	
	VOLKSWAGEN LIGHT VAN	CADDY (95-)	
	VOLKSWAGEN LIGHT VAN	CADDY (95-)	
	VOLKSWAGEN LIGHT VAN	CADDY (95-)	
	VOLKSWAGEN LIGHT VAN	CADDY (95-)	
67301	SEAT LIGHT VAN	INCA (95-)	R2456
	VOLKSWAGEN LIGHT VAN	CADDY (95-)	
	SEAT LIGHT VAN	INCA (95-)	
	VOLKSWAGEN LIGHT VAN	CADDY (95-)	
67327	NISSAN LIGHT VAN	PATROL Y60 (88-)	R2437
67353	NISSAN LIGHT VAN	KING CAB D21 (85-)	R3200
	NISSAN LIGHT VAN	PICK UP D21 (85-)	
	NISSAN LIGHT VAN	TERRANO (87-)	
67353	NISSAN LIGHT VAN	TERRANO (87-)	R3200
	NISSAN LIGHT VAN	PATROL Y61 (97-)	
	NISSAN LIGHT VAN	SAFARI Y61 (97-)	
67356	NISSAN LIGHT VAN	KING CAB D22 (98-)	R3091
	NISSAN LIGHT VAN	PICK UP D22 (98-)	
67357	NISSAN LIGHT VAN	KING CAB D22 (98-)	R3295
	NISSAN LIGHT VAN	PICK UP D22 (98-)	
67358	MAZDA LIGHT VAN	E 2000 D (99-)	R3261
	MAZDA LIGHT VAN	E 2200 D (99-)	
67490	HYUNDAI LIGHT VAN	STAREX (93-)	R2816
	HYUNDAI LIGHT VAN	H-100 PORTER (97-)	
67497	HYUNDAI LIGHT VAN	STAREX (93-)	R2815
	HYUNDAI LIGHT VAN	H-100 PORTER (97-)	
67498	HYUNDAI LIGHT VAN	STAREX (93-)	R2817
	HYUNDAI LIGHT VAN	H-100 MINI BUS (93-)	
67499	HYUNDAI LIGHT VAN	H-100 PORTER (97-)	R2818
	HYUNDAI LIGHT VAN	H-100 MINI BUS (93-)	
67501	HYUNDAI LIGHT VAN	STAREX (93-)	R2236
	MITSUBISHI LIGHT VAN	L 300 (86-)	
	MITSUBISHI LIGHT VAN	L 300 (86-)	
	MAZDA LIGHT VAN	B 1600 (84-)	
68130	MAZDA LIGHT VAN	B 2000 (84-)	R3107
	MAZDA LIGHT VAN	B 2200 (84-)	
	MITSUBISHI LIGHT VAN	MONTERO SPORT (98-)	
68154	MITSUBISHI LIGHT VAN	PAJERO SPORT (98-)	R3255
	MITSUBISHI LIGHT VAN	MONTERO SPORT (98-)	
68155	MITSUBISHI LIGHT VAN	PAJERO SPORT (98-)	R3209
	MITSUBISHI LIGHT VAN	L 200 (87-)	
68157	MITSUBISHI LIGHT VAN	PAJERO (90-)	R3126
	MITSUBISHI LIGHT VAN	SHOGUN (90-)	
68158	MITSUBISHI LIGHT VAN	PAJERO PININ (99-)	R3121
68502A	MAZDA LIGHT VAN	E 2000 D (99-)	
	MAZDA LIGHT VAN	E 2200 D (99-)	
68700A	NISSAN LIGHT VAN	NOTE (06-)	R3112
	NISSAN LIGHT VAN	X-TRAIL T30 (01-)	
	NISSAN LIGHT VAN	X-TRAIL T30 (01-)	
68705A	NISSAN LIGHT VAN	X-TRAIL T30 (01-)	R3137
68706A	NISSAN LIGHT VAN	TERRANO (02-)	R3138
68707A	NISSAN LIGHT VAN	TERRANO (02-)	R3139
68708A	FORD LIGHT VAN	MAVERICK (96-)	R3140
	NISSAN LIGHT VAN	TERRANO (96-)	
	NISSAN LIGHT VAN	TERRANO (02-)	

NISSENS' REFERENCE LIST

Nissens			DRAW.
68709A	FORD LIGHT VAN	MAVERICK (96-)	R3141
	NISSAN LIGHT VAN	TERRANO (96-)	
	NISSAN LIGHT VAN	TERRANO (02-)	
68715	NISSAN LIGHT VAN	PATHFINDER (97-)	R3288
69195A	CHEVROLET LIGHT VAN	PICKUP S10	R2800
69203	FORD USA LIGHT VAN	RANGER PICKUP (98-)	
	FORD USA LIGHT VAN	F250 SUPER DUTY (99-)	
	FORD USA LIGHT VAN	F350 SUPER DUTY (99-)	
	FORD USA LIGHT VAN	F450 SUPER DUTY (99-)	
69205	FORD USA LIGHT VAN	F550 SUPER DUTY (99-)	R3305
	FORD USA LIGHT VAN	F250 SUPER DUTY (99-)	
	FORD USA LIGHT VAN	F350 SUPER DUTY (99-)	
	CHEVROLET LIGHT VAN	BRAVADA (01-)	
	CHEVROLET LIGHT VAN	SSR (01-)	
	CHEVROLET LIGHT VAN	TRAILBLAZER (01-)	
69211	GMC LIGHT VAN	ENVOY (01-)	
	VOLKSWAGEN LIGHT VAN	CADDY (04-)	
	VOLKSWAGEN LIGHT VAN	CADDY (04-)	
	VOLKSWAGEN LIGHT VAN	CADDY (04-)	
	VOLKSWAGEN LIGHT VAN	CADDY (04-)	
	VOLKSWAGEN LIGHT VAN	TOURAN (03-)	
70228	VOLKSWAGEN LIGHT VAN	TOURAN (03-)	H0426
	CITROEN LIGHT VAN	C 15 (84-)	
	CITROEN LIGHT VAN	C 15 (84-)	
	CITROEN LIGHT VAN	C 25 (81-)	
	FIAT LIGHT VAN	DUCATO (81-)	
	FIAT LIGHT VAN	TALENTO (89-)	
	PEUGEOT LIGHT VAN	J5 (81-)	
	TALBOT LIGHT VAN	EXPRESS (81-)	
	CITROEN LIGHT VAN	BERLINGO (96-)	
71147	CITROEN LIGHT VAN	BERLINGO (96-)	H0091
	PEUGEOT LIGHT VAN	PARTNER (96-)	
	PEUGEOT LIGHT VAN	PARTNER (96-)	
	CITROEN LIGHT VAN	C 25 (81-)	
	CITROEN LIGHT VAN	C 25 (81-)	
	FIAT LIGHT VAN	DUCATO (81-)	
	FIAT LIGHT VAN	DUCATO (81-)	
71148	FIAT LIGHT VAN	TALENTO (89-)	H0146
	PEUGEOT LIGHT VAN	J5 (81-)	
	PEUGEOT LIGHT VAN	J5 (81-)	
	TALBOT LIGHT VAN	EXPRESS (81-)	
	TALBOT LIGHT VAN	EXPRESS (81-)	
71149	CITROEN LIGHT VAN	DISPATCH (95-)	H0254
	CITROEN LIGHT VAN	DISPATCH (95-)	
	CITROEN LIGHT VAN	JUMPY (95-)	
	CITROEN LIGHT VAN	JUMPY (95-)	
	FIAT LIGHT VAN	SCUDO (96-)	
	FIAT LIGHT VAN	SCUDO (96-)	
	PEUGEOT LIGHT VAN	E7 - EUROCAB	
	PEUGEOT LIGHT VAN	EXPERT (95-)	
	PEUGEOT LIGHT VAN	EXPERT (95-)	
	CITROEN LIGHT VAN	BERLINGO (96-)	
71156	CITROEN LIGHT VAN	BERLINGO (96-)	H0235
	CITROEN LIGHT VAN	BERLINGO (02-)	
	CITROEN LIGHT VAN	BERLINGO (02-)	
	PEUGEOT LIGHT VAN	PARTNER (96-)	
	PEUGEOT LIGHT VAN	PARTNER (96-)	
	PEUGEOT LIGHT VAN	PARTNER (02-)	
	PEUGEOT LIGHT VAN	PARTNER (02-)	
	FIAT LIGHT VAN	FIORINO (88-)	
	FIAT LIGHT VAN	FIORINO (88-)	
	CITROEN LIGHT VAN	JUMPER (94-)	
71443	CITROEN LIGHT VAN	JUMPER (94-)	H0371
	CITROEN LIGHT VAN	RELAY (94-)	
	CITROEN LIGHT VAN	RELAY (94-)	
	FIAT LIGHT VAN	DUCATO (94-)	

Nissens			DRAW.
71443	FIAT LIGHT VAN	DUCATO (94-)	H0371
	PEUGEOT LIGHT VAN	BOXER (94-)	
	PEUGEOT LIGHT VAN	BOXER (94-)	
	FIAT LIGHT VAN	DOBLO (01-)	
71451	FIAT LIGHT VAN	DOBLO (01-)	H0405
	FORD LIGHT VAN	TRANSIT (94-)	
	FORD LIGHT VAN	TRANSIT (94-)	
	FORD LIGHT VAN	TRANSIT (94-)	
	FORD LIGHT VAN	TRANSIT (94-)	
	FORD LIGHT VAN	TRANSIT CONNECT (02-)	
71747	FORD LIGHT VAN	TRANSIT CONNECT (02-)	H0278
	FORD LIGHT VAN	TRANSIT (86-)	
71757	FORD LIGHT VAN	TRANSIT (86-)	H0267
71758	FORD LIGHT VAN	TRANSIT (92-)	H0268
71758	FORD LIGHT VAN	TRANSIT (92-)	H0268
71759	FORD LIGHT VAN	TRANSIT (78-)	H0080
71761	FORD LIGHT VAN	SIERRA PICKUP (87-)	H0162
	FORD LIGHT VAN	SIERRA PICKUP (87-)	
	FORD LIGHT VAN	SIERRA PICKUP (87-)	
	FORD LIGHT VAN	SIERRA PICKUP (87-)	
	FORD LIGHT VAN	EXPLORER (91-)	
	FORD LIGHT VAN	RANGER (98-)	
	MAZDA LIGHT VAN	B 2500 (96-)	
	FORD LIGHT VAN	MAVERICK (02-)	
71767	MAZDA LIGHT VAN	TRIBUTE (02-)	H0389
	FORD LIGHT VAN	TRANSIT (00-)	
	FORD LIGHT VAN	TRANSIT (00-)	
	FORD LIGHT VAN	TRANSIT (00-)	
71769	FORD LIGHT VAN	TRANSIT (00-)	H0128
71769	FORD LIGHT VAN	TRANSIT (00-)	H0128
71769	FORD LIGHT VAN	TRANSIT (00-)	H0128
72004	MERCEDES LIGHT VAN	207 D (77-)	H0223
	MERCEDES LIGHT VAN	209 D (76-)	
	MERCEDES LIGHT VAN	307 D (77-)	
	MERCEDES LIGHT VAN	309 D (68-)	
	MERCEDES LIGHT VAN	407 D (81-)	
	MERCEDES LIGHT VAN	409 D (77-)	
	MERCEDES LIGHT VAN	MB 100 D (88-)	
	MERCEDES LIGHT VAN	VITO W 638 (96-)	
	MERCEDES LIGHT VAN	VITO W 638 (96-)	
72037	MERCEDES LIGHT VAN	VIANO W 639 (03-)	
	MERCEDES LIGHT VAN	VIANO W 639 (03-)	
72037	MERCEDES LIGHT VAN	VITO W 639 (03-)	
	MERCEDES LIGHT VAN	SPRINTER (95-)	
72038	MERCEDES LIGHT VAN	SPRINTER (95-)	
	FORD LIGHT VAN	MAVERICK (93-)	
72050	FORD LIGHT VAN	MAVERICK (96-)	H0271
	NISSAN LIGHT VAN	TERRANO (93-)	
	NISSAN LIGHT VAN	TERRANO (96-)	
	NISSAN LIGHT VAN	TERRANO (02-)	
	NISSAN LIGHT VAN	VANETTE (92-)	
	NISSAN LIGHT VAN	VANETTE (92-)	
	NISSAN LIGHT VAN	VANETTE CARGO (95-)	
	NISSAN LIGHT VAN	VANETTE CARGO (95-)	
	NISSAN LIGHT VAN	PATROL Y61 (97-)	
	NISSAN LIGHT VAN	PATROL Y61 (97-)	
	NISSAN LIGHT VAN	SAFARI Y61 (97-)	
	NISSAN LIGHT VAN	SAFARI Y61 (97-)	
	NISSAN LIGHT VAN	INTERSTAR (02-)	
	OPEL LIGHT VAN	MOVANO (98-)	
72207	RENAULT LIGHT VAN	MASTER (98-)	
	OPEL LIGHT VAN	COMBO (93-)	
	OPEL LIGHT VAN	COMBO (93-)	

NISSENS' REFERENCE LIST

Nissens			DRAW.
72659	OPEL LIGHT VAN	FRONTERA A (92-)	H0270
72659	OPEL LIGHT VAN	FRONTERA A (92-)	H0270
72661	OPEL LIGHT VAN	COMBO (00-)	H0071
	OPEL LIGHT VAN	COMBO (00-)	
	OPEL LIGHT VAN	FRONTERA B (98-)	
72664	OPEL LIGHT VAN	FRONTERA B (98-)	H0415
72665	NISSAN LIGHT VAN	INTERSTAR (02-)	
	OPEL LIGHT VAN	MOVANO (98-)	
	RENAULT LIGHT VAN	MASTER (98-)	
72960	CITROEN LIGHT VAN	LNA (82-)	H0041
	CITROEN LIGHT VAN	C 25 (81-)	
	CITROEN LIGHT VAN	C 25 (81-)	
72980	FIAT LIGHT VAN	DUCATO (81-)	H0043
	FIAT LIGHT VAN	DUCATO (81-)	
	FIAT LIGHT VAN	TALENTO (89-)	
	PEUGEOT LIGHT VAN	J5 (81-)	
	PEUGEOT LIGHT VAN	J5 (81-)	
	TALBOT LIGHT VAN	EXPRESS (81-)	
72980	TALBOT LIGHT VAN	EXPRESS (81-)	H0043
	NISSAN LIGHT VAN	KUBISTAR (03-)	
	NISSAN LIGHT VAN	KUBISTAR (03-)	
	RENAULT LIGHT VAN	KANGOO (98-)	
	RENAULT LIGHT VAN	KANGOO (98-)	
	OPEL LIGHT VAN	FRONTERA A (92-)	
73252	RENAULT LIGHT VAN	KANGOO (98-)	H0110
	RENAULT LIGHT VAN	TRAFIC (80-)	
	RENAULT LIGHT VAN	TRAFIC (80-)	
	RENAULT LIGHT VAN	TRAFIC (89-)	
73330	RENAULT LIGHT VAN	TRAFIC (89-)	H0057
	RENAULT LIGHT VAN	TRAFIC (89-)	
	RENAULT LIGHT VAN	TRAFIC (97-)	
73358	RENAULT LIGHT VAN	MASTER (80-)	H0183
73358	RENAULT LIGHT VAN	MASTER (80-)	H0183
73359	RENAULT LIGHT VAN	EXPRESS (85-)	H0178
	RENAULT LIGHT VAN	EXPRESS (85-)	
	RENAULT LIGHT VAN	EXPRESS (91-)	
	RENAULT LIGHT VAN	EXPRESS (91-)	
	RENAULT LIGHT VAN	EXTRA (85-)	
	RENAULT LIGHT VAN	EXTRA (85-)	
	RENAULT LIGHT VAN	EXTRA (91-)	
	RENAULT LIGHT VAN	EXTRA (91-)	
	RENAULT LIGHT VAN	RAPID (85-)	
	RENAULT LIGHT VAN	RAPID (85-)	
	RENAULT LIGHT VAN	RAPID (91-)	
	RENAULT LIGHT VAN	RAPID (91-)	
733591	RENAULT LIGHT VAN	EXPRESS (85-)	H0414
	RENAULT LIGHT VAN	EXPRESS (85-)	
	RENAULT LIGHT VAN	EXPRESS (91-)	
	RENAULT LIGHT VAN	EXPRESS (91-)	
	RENAULT LIGHT VAN	EXTRA (85-)	
	RENAULT LIGHT VAN	EXTRA (85-)	
	RENAULT LIGHT VAN	EXTRA (91-)	
	RENAULT LIGHT VAN	EXTRA (91-)	
	RENAULT LIGHT VAN	RAPID (85-)	
	RENAULT LIGHT VAN	RAPID (85-)	
	RENAULT LIGHT VAN	RAPID (91-)	
	RENAULT LIGHT VAN	RAPID (91-)	

Nissens			DRAW.
73361	RENAULT LIGHT VAN	EXPRESS (85-)	H0194
	RENAULT LIGHT VAN	EXPRESS (85-)	
	RENAULT LIGHT VAN	EXPRESS (91-)	
	RENAULT LIGHT VAN	EXPRESS (91-)	
	RENAULT LIGHT VAN	EXTRA (85-)	
	RENAULT LIGHT VAN	EXTRA (85-)	
	RENAULT LIGHT VAN	EXTRA (91-)	
	RENAULT LIGHT VAN	EXTRA (91-)	
	RENAULT LIGHT VAN	RAPID (85-)	
	RENAULT LIGHT VAN	RAPID (85-)	
	RENAULT LIGHT VAN	RAPID (91-)	
	RENAULT LIGHT VAN	RAPID (91-)	
73375	NISSAN LIGHT VAN	INTERSTAR (02-)	H0265
	OPEL LIGHT VAN	ARENA (98-)	
	OPEL LIGHT VAN	MOVANO (98-)	
	RENAULT LIGHT VAN	MASTER (98-)	
73377	PONTIAC LIGHT VAN	G6 (05-)	H0409
	TOYOTA LIGHT VAN	HI-ACE (89-)	
	TOYOTA LIGHT VAN	HI-ACE (89-)	
	TOYOTA LIGHT VAN	HI-ACE (84-)	
	TOYOTA LIGHT VAN	HI-ACE (95-)	
	TOYOTA LIGHT VAN	HI-ACE (95-)	
	TOYOTA LIGHT VAN	HI-ACE (01-)	
	VOLKSWAGEN LIGHT VAN	CADDY (82-)	
73940	VOLKSWAGEN LIGHT VAN	CADDY (82-)	H0086
	VOLKSWAGEN LIGHT VAN	CADDY (82-)	
	VOLKSWAGEN LIGHT VAN	CADDY (82-)	
	VOLKSWAGEN LIGHT VAN	CADDY (82-)	
	VOLKSWAGEN LIGHT VAN	CADDY (82-)	
	VOLKSWAGEN LIGHT VAN	CADDY (82-)	
	VOLKSWAGEN LIGHT VAN	LT (82-)	
	VOLKSWAGEN LIGHT VAN	LT (82-)	
	VOLKSWAGEN LIGHT VAN	LT (82-)	
	SEAT LIGHT VAN	INCA (95-)	
	SEAT LIGHT VAN	INCA (95-)	
	SEAT LIGHT VAN	INCA (95-)	
	SEAT LIGHT VAN	INCA (95-)	
	SEAT LIGHT VAN	INCA (95-)	
	SEAT LIGHT VAN	INCA (95-)	
	SEAT LIGHT VAN	INCA (95-)	
	SEAT LIGHT VAN	INCA (95-)	
	SEAT LIGHT VAN	INCA (95-)	
	SEAT LIGHT VAN	INCA (95-)	
73961	SEAT LIGHT VAN	INCA (95-)	H0109
	VOLKSWAGEN LIGHT VAN	CADDY (95-)	
	VOLKSWAGEN LIGHT VAN	CADDY (95-)	
	VOLKSWAGEN LIGHT VAN	CADDY (95-)	
	VOLKSWAGEN LIGHT VAN	CADDY (95-)	
	VOLKSWAGEN LIGHT VAN	CADDY (95-)	
	VOLKSWAGEN LIGHT VAN	CADDY (95-)	
	VOLKSWAGEN LIGHT VAN	CADDY (95-)	
	VOLKSWAGEN LIGHT VAN	CADDY (95-)	
	VOLKSWAGEN LIGHT VAN	CADDY (95-)	
	VOLKSWAGEN LIGHT VAN	CADDY (95-)	
	VOLKSWAGEN LIGHT VAN	CADDY (95-)	
	VOLKSWAGEN LIGHT VAN	CADDY (95-)	
	VOLKSWAGEN LIGHT VAN	CADDY (95-)	
	VOLKSWAGEN LIGHT VAN	CADDY (95-)	
	VOLKSWAGEN LIGHT VAN	CADDY (95-)	
	SEAT LIGHT VAN	INCA (95-)	
	SEAT LIGHT VAN	INCA (95-)	
	SEAT LIGHT VAN	INCA (95-)	
	SEAT LIGHT VAN	INCA (95-)	
	SEAT LIGHT VAN	INCA (95-)	
	SEAT LIGHT VAN	INCA (95-)	
	SEAT LIGHT VAN	INCA (95-)	
	SEAT LIGHT VAN	INCA (95-)	
	SEAT LIGHT VAN	INCA (95-)	
	SEAT LIGHT VAN	INCA (95-)	
	SEAT LIGHT VAN	INCA (95-)	

NISSENS' REFERENCE LIST

Nissens			DRAW.
73962	VOLKSWAGEN LIGHT VAN	CADDY (95-)	H0085
	VOLKSWAGEN LIGHT VAN	CADDY (95-)	
	VOLKSWAGEN LIGHT VAN	CADDY (95-)	
	VOLKSWAGEN LIGHT VAN	CADDY (95-)	
	VOLKSWAGEN LIGHT VAN	CADDY (95-)	
	VOLKSWAGEN LIGHT VAN	CADDY (95-)	
	VOLKSWAGEN LIGHT VAN	CADDY (95-)	
	VOLKSWAGEN LIGHT VAN	CADDY (95-)	
	VOLKSWAGEN LIGHT VAN	CADDY (95-)	
	VOLKSWAGEN LIGHT VAN	CADDY (95-)	
	VOLKSWAGEN LIGHT VAN	CADDY (95-)	
	VOLKSWAGEN LIGHT VAN	CADDY (95-)	
	VOLKSWAGEN LIGHT VAN	CADDY (95-)	
	VOLKSWAGEN LIGHT VAN	CADDY (95-)	
	VOLKSWAGEN LIGHT VAN	CADDY (95-)	
	VOLKSWAGEN LIGHT VAN	TRANSPORTER T3 (79-)	
	VOLKSWAGEN LIGHT VAN	TRANSPORTER T3 (79-)	
	VOLKSWAGEN LIGHT VAN	TRANSPORTER T4 (90-)	
	VOLKSWAGEN LIGHT VAN	TRANSPORTER T4 (90-)	
	VOLKSWAGEN LIGHT VAN	TRANSPORTER T4 (90-)	
	VOLKSWAGEN LIGHT VAN	TRANSPORTER T4 (90-)	
	VOLKSWAGEN LIGHT VAN	TRANSPORTER T4 (90-)	
	VOLKSWAGEN LIGHT VAN	TRANSPORTER T4 (90-)	
	VOLKSWAGEN LIGHT VAN	TRANSPORTER T4 (90-)	
	VOLKSWAGEN LIGHT VAN	TRANSPORTER T4 (90-)	
	VOLKSWAGEN LIGHT VAN	TRANSPORTER T4 (90-)	
	VOLKSWAGEN LIGHT VAN	TRANSPORTER T4 (90-)	
73965	VOLKSWAGEN LIGHT VAN	TRANSPORTER T4 (90-)	H0175
73965	VOLKSWAGEN LIGHT VAN	TRANSPORTER T4 (90-)	H0175
73965	VOLKSWAGEN LIGHT VAN	TRANSPORTER T4 (90-)	H0175
73965	VOLKSWAGEN LIGHT VAN	TRANSPORTER T4 (90-)	H0175
73965	VOLKSWAGEN LIGHT VAN	TRANSPORTER T4 (90-)	H0175
73965	VOLKSWAGEN LIGHT VAN	TRANSPORTER T4 (90-)	H0175
73965	VOLKSWAGEN LIGHT VAN	TRANSPORTER T4 (90-)	H0175
73965	VOLKSWAGEN LIGHT VAN	TRANSPORTER T4 (90-)	H0175
73965	VOLKSWAGEN LIGHT VAN	TRANSPORTER T4 (90-)	H0175
73965	VOLKSWAGEN LIGHT VAN	TRANSPORTER T4 (90-)	H0175
73965	VOLKSWAGEN LIGHT VAN	TRANSPORTER T4 (90-)	H0175
73965	VOLKSWAGEN LIGHT VAN	TRANSPORTER T4 (90-)	H0175
73971	VOLKSWAGEN LIGHT VAN	TRANSPORTER T4 (90-)	H0075
73971	VOLKSWAGEN LIGHT VAN	TRANSPORTER T4 (90-)	H0075
73971	VOLKSWAGEN LIGHT VAN	TRANSPORTER T4 (90-)	H0075
73971	VOLKSWAGEN LIGHT VAN	TRANSPORTER T4 (90-)	H0075
73971	VOLKSWAGEN LIGHT VAN	TRANSPORTER T4 (90-)	H0075
73971	VOLKSWAGEN LIGHT VAN	TRANSPORTER T4 (90-)	H0075
73971	VOLKSWAGEN LIGHT VAN	TRANSPORTER T4 (90-)	H0075
73971	VOLKSWAGEN LIGHT VAN	TRANSPORTER T4 (90-)	H0075
73971	VOLKSWAGEN LIGHT VAN	TRANSPORTER T4 (90-)	H0075
73971	VOLKSWAGEN LIGHT VAN	TRANSPORTER T4 (90-)	H0075
73971	VOLKSWAGEN LIGHT VAN	TRANSPORTER T4 (90-)	H0075
73971	VOLKSWAGEN LIGHT VAN	TRANSPORTER T4 (90-)	H0075
73971	VOLKSWAGEN LIGHT VAN	TRANSPORTER T4 (90-)	H0075
73971	VOLKSWAGEN LIGHT VAN	TRANSPORTER T4 (90-)	H0075
73971	VOLKSWAGEN LIGHT VAN	TRANSPORTER T4 (90-)	H0075
73971	VOLKSWAGEN LIGHT VAN	TRANSPORTER T4 (90-)	H0075

Nissens			DRAW.
73971	VOLKSWAGEN LIGHT VAN	TRANSPORTER T4 (90-)	H0075
73971	VOLKSWAGEN LIGHT VAN	TRANSPORTER T4 (90-)	H0075
73971	VOLKSWAGEN LIGHT VAN	TRANSPORTER T4 (90-)	H0075
73971	VOLKSWAGEN LIGHT VAN	TRANSPORTER T4 (90-)	H0075
73971	VOLKSWAGEN LIGHT VAN	TRANSPORTER T4 (90-)	H0075
73971	VOLKSWAGEN LIGHT VAN	TRANSPORTER T4 (90-)	H0075
73974	VOLKSWAGEN LIGHT VAN	TRANSPORTER T4 (90-)	H0459
73974	VOLKSWAGEN LIGHT VAN	TRANSPORTER T4 (90-)	H0459
73974	VOLKSWAGEN LIGHT VAN	TRANSPORTER T4 (90-)	H0459
73974	VOLKSWAGEN LIGHT VAN	TRANSPORTER T4 (90-)	H0459
73974	VOLKSWAGEN LIGHT VAN	TRANSPORTER T4 (90-)	H0459
73974	VOLKSWAGEN LIGHT VAN	TRANSPORTER T4 (90-)	H0459
73974	VOLKSWAGEN LIGHT VAN	TRANSPORTER T4 (90-)	H0459
73974	VOLKSWAGEN LIGHT VAN	TRANSPORTER T4 (90-)	H0459
73974	VOLKSWAGEN LIGHT VAN	TRANSPORTER T4 (90-)	H0459
73974	VOLKSWAGEN LIGHT VAN	TRANSPORTER T4 (90-)	H0459
73974	VOLKSWAGEN LIGHT VAN	TRANSPORTER T4 (90-)	H0459
73974	VOLKSWAGEN LIGHT VAN	TRANSPORTER T4 (90-)	H0459
73974	VOLKSWAGEN LIGHT VAN	TRANSPORTER T4 (90-)	H0459
73974	VOLKSWAGEN LIGHT VAN	TRANSPORTER T4 (90-)	H0459
73974	VOLKSWAGEN LIGHT VAN	TRANSPORTER T4 (90-)	H0459
73974	VOLKSWAGEN LIGHT VAN	TRANSPORTER T4 (90-)	H0459
73974	VOLKSWAGEN LIGHT VAN	TRANSPORTER T4 (90-)	H0459
73974	VOLKSWAGEN LIGHT VAN	TRANSPORTER T4 (90-)	H0459
73974	VOLKSWAGEN LIGHT VAN	TRANSPORTER T4 (90-)	H0459
73974	VOLKSWAGEN LIGHT VAN	TRANSPORTER T4 (90-)	H0459
73974	VOLKSWAGEN LIGHT VAN	TRANSPORTER T4 (90-)	H0459
73974	VOLKSWAGEN LIGHT VAN	TRANSPORTER T4 (90-)	H0459
73984	CITROEN LIGHT VAN	JUMPER (94-)	H0228
	CITROEN LIGHT VAN	JUMPER (94-)	
	CITROEN LIGHT VAN	RELAY (94-)	
	CITROEN LIGHT VAN	RELAY (94-)	
73984	FIAT LIGHT VAN	DUCATO (94-)	H0228
	FIAT LIGHT VAN	DUCATO (94-)	
	PEUGEOT LIGHT VAN	BOXER (94-)	
	PEUGEOT LIGHT VAN	BOXER (94-)	
73986	CITROEN LIGHT VAN	JUMPER (94-)	H0403
	CITROEN LIGHT VAN	JUMPER (94-)	
	CITROEN LIGHT VAN	JUMPER (02-)	
	CITROEN LIGHT VAN	JUMPER (02-)	
	CITROEN LIGHT VAN	RELAY (02-)	
	CITROEN LIGHT VAN	RELAY (02-)	
	CITROEN LIGHT VAN	RELAY (94-)	
	CITROEN LIGHT VAN	RELAY (94-)	
73986	FIAT LIGHT VAN	DUCATO (94-)	H0403
	FIAT LIGHT VAN	DUCATO (94-)	
	FIAT LIGHT VAN	DUCATO (02-)	
	FIAT LIGHT VAN	DUCATO (02-)	
	PEUGEOT LIGHT VAN	BOXER (94-)	
	PEUGEOT LIGHT VAN	BOXER (94-)	
	PEUGEOT LIGHT VAN	BOXER (02-)	
	PEUGEOT LIGHT VAN	BOXER (02-)	

NISSENS' REFERENCE LIST

Nissens			DRAW.
73987	CITROEN LIGHT VAN	JUMPER (94-)	H0462
	CITROEN LIGHT VAN	JUMPER (94-)	
	CITROEN LIGHT VAN	RELAY (94-)	
	CITROEN LIGHT VAN	RELAY (94-)	
73987	FIAT LIGHT VAN	DUCATO (94-)	H0462
	FIAT LIGHT VAN	DUCATO (94-)	
	PEUGEOT LIGHT VAN	BOXER (94-)	
	PEUGEOT LIGHT VAN	BOXER (94-)	
73988	FIAT LIGHT VAN	DUCATO (81-)	H0413
	FIAT LIGHT VAN	DUCATO (81-)	
	FIAT LIGHT VAN	TALENTO (89-)	
	PEUGEOT LIGHT VAN	J5 (81-)	
73988	PEUGEOT LIGHT VAN	J5 (81-)	H0413
	TALBOT LIGHT VAN	EXPRESS (81-)	
	TALBOT LIGHT VAN	EXPRESS (81-)	
	KIA LIGHT VAN	K-SERIE (01-)	
77526	KIA LIGHT VAN	K-SERIE (01-)	H0450
77530	KIA LIGHT VAN	K-SERIE (04-)	
77530	KIA LIGHT VAN	K-SERIE (04-)	
77608	HYUNDAI LIGHT VAN	H-100 MINI BUS (93-)	H0305
	HYUNDAI LIGHT VAN	H-100 MINI BUS (93-)	
	HYUNDAI LIGHT VAN	H-100 PORTER (93-)	
77610	HYUNDAI LIGHT VAN	H-200 (97-)	H0299
	HYUNDAI LIGHT VAN	H-200 (97-)	
	HYUNDAI LIGHT VAN	H1 (97-)	
77610	HYUNDAI LIGHT VAN	H1 (97-)	H0299
	HYUNDAI LIGHT VAN	STAREX (93-)	
	HYUNDAI LIGHT VAN	STAREX (93-)	
77611	HYUNDAI LIGHT VAN	H-100 MINI BUS (93-)	H0381
	HYUNDAI LIGHT VAN	H-100 MINI BUS (93-)	
77617	HYUNDAI LIGHT VAN	H-100 PORTER (97-)	H0454
77617	HYUNDAI LIGHT VAN	H-100 PORTER (97-)	H0454
77618	HYUNDAI LIGHT VAN	STAREX (93-)	H0437
77618	HYUNDAI LIGHT VAN	STAREX (93-)	H0437
85003	FIAT LIGHT VAN	SCUDO (96-)	B0003
	PEUGEOT LIGHT VAN	EXPERT (95-)	
	CITROEN LIGHT VAN	DISPATCH (95-)	
	CITROEN LIGHT VAN	DISPATCH (95-)	
	CITROEN LIGHT VAN	JUMPY (95-)	
	CITROEN LIGHT VAN	JUMPY (95-)	
	FIAT LIGHT VAN	SCUDO (96-)	
85004	FIAT LIGHT VAN	SCUDO (96-)	B0004
	PEUGEOT LIGHT VAN	EXPERT (95-)	
	PEUGEOT LIGHT VAN	EXPERT (95-)	
	OPEL LIGHT VAN	COMBO (93-)	
	CITROEN LIGHT VAN	DISPATCH (95-)	
	CITROEN LIGHT VAN	JUMPY (95-)	
	FIAT LIGHT VAN	SCUDO (96-)	
	PEUGEOT LIGHT VAN	E7 - EUROCAB	
	PEUGEOT LIGHT VAN	EXPERT (95-)	
85020	CITROEN LIGHT VAN	JUMPER (94-)	B0020
	CITROEN LIGHT VAN	JUMPER (02-)	
	CITROEN LIGHT VAN	JUMPER (02-)	
	CITROEN LIGHT VAN	RELAY (02-)	
	CITROEN LIGHT VAN	RELAY (02-)	
	CITROEN LIGHT VAN	RELAY (94-)	
	FIAT LIGHT VAN	DUCATO (94-)	
	FIAT LIGHT VAN	DUCATO (02-)	

Nissens			DRAW.
85020	FIAT LIGHT VAN	DUCATO (02-)	B0020
	PEUGEOT LIGHT VAN	BOXER (94-)	
	PEUGEOT LIGHT VAN	BOXER (94-)	
	PEUGEOT LIGHT VAN	BOXER (02-)	
	PEUGEOT LIGHT VAN	BOXER (02-)	
	CITROEN LIGHT VAN	JUMPER (02-)	
	CITROEN LIGHT VAN	RELAY (02-)	
	FIAT LIGHT VAN	DUCATO (02-)	
85021	PEUGEOT LIGHT VAN	BOXER (02-)	B0021
	CITROEN LIGHT VAN	BERLINGO (96-)	
	PEUGEOT LIGHT VAN	PARTNER (96-)	
	MERCEDES LIGHT VAN	VANEO (02-)	
85078	MERCEDES LIGHT VAN	VANEO (02-)	B0078
	CITROEN LIGHT VAN	BERLINGO (96-)	
85083	PEUGEOT LIGHT VAN	PARTNER (96-)	B0083
	CITROEN LIGHT VAN	BERLINGO (96-)	
	PEUGEOT LIGHT VAN	PARTNER (96-)	
	FIAT LIGHT VAN	DOBLO (01-)	
	FIAT LIGHT VAN	DOBLO (01-)	
85128	FIAT LIGHT VAN	DOBLO (01-)	B0128
85129	FIAT LIGHT VAN	DOBLO (01-)	B0129
85130	FIAT LIGHT VAN	DOBLO (01-)	B0130
85131	FIAT LIGHT VAN	DOBLO (01-)	B0131
85133	FIAT LIGHT VAN	DOBLO (01-)	B0133
85190	OPEL LIGHT VAN	COMBO (00-)	B0190
	OPEL LIGHT VAN	COMBO (93-)	
	OPEL LIGHT VAN	COMBO (93-)	
85196	OPEL LIGHT VAN	COMBO (00-)	B0196
	OPEL LIGHT VAN	COMBO (00-)	
85243	PONTIAC LIGHT VAN	G6 (05-)	B0243
	NISSAN LIGHT VAN	INTERSTAR (02-)	
	OPEL LIGHT VAN	ARENA (98-)	
	OPEL LIGHT VAN	MOVANO (98-)	
	RENAULT LIGHT VAN	MASTER (98-)	
	NISSAN LIGHT VAN	INTERSTAR (02-)	
85245	OPEL LIGHT VAN	ARENA (98-)	B0245
	OPEL LIGHT VAN	MOVANO (98-)	
	RENAULT LIGHT VAN	MASTER (98-)	
	VOLKSWAGEN LIGHT VAN	TRANSPORTER T4 (90-)	
85248	VOLKSWAGEN LIGHT VAN	TRANSPORTER T4 (90-)	B0248
85248	VOLKSWAGEN LIGHT VAN	TRANSPORTER T4 (90-)	B0248
85248	VOLKSWAGEN LIGHT VAN	TRANSPORTER T4 (90-)	B0248
85248	VOLKSWAGEN LIGHT VAN	TRANSPORTER T4 (90-)	B0248
85248	VOLKSWAGEN LIGHT VAN	TRANSPORTER T4 (90-)	B0248
85248	VOLKSWAGEN LIGHT VAN	TRANSPORTER T4 (90-)	B0248
85248	VOLKSWAGEN LIGHT VAN	TRANSPORTER T4 (90-)	B0248
85253	NISSAN LIGHT VAN	KUBISTAR (03-)	B0253
	NISSAN LIGHT VAN	KUBISTAR (03-)	
	RENAULT LIGHT VAN	KANGOO (98-)	
	RENAULT LIGHT VAN	KANGOO (98-)	
	FORD LIGHT VAN	TRANSIT CONNECT (02-)	
85261	FORD LIGHT VAN	TRANSIT CONNECT (02-)	B0261
85262	FORD LIGHT VAN	TRANSIT CONNECT (02-)	B0262
85263	FORD LIGHT VAN	TRANSIT CONNECT (02-)	B0263
85263	FORD LIGHT VAN	TRANSIT CONNECT (02-)	B0263
85264	FORD LIGHT VAN	TRANSIT CONNECT (02-)	B0264
85264	FORD LIGHT VAN	TRANSIT CONNECT (02-)	B0264

NISSENS' REFERENCE LIST

Nissens			DRAW.
85276	MITSUBISHI LIGHT VAN	OUTLANDER (03-)	B0276
85277	FORD LIGHT VAN	MAVERICK (02-)	B0277
	MAZDA LIGHT VAN	TRIBUTE (02-)	
	FORD LIGHT VAN	MAVERICK (02-)	
	MAZDA LIGHT VAN	TRIBUTE (02-)	
85279	NISSAN LIGHT VAN	X-TRAIL T30 (01-)	B0279
85316	CITROEN LIGHT VAN	BERLINGO (02-)	B0316
	PEUGEOT LIGHT VAN	PARTNER (02-)	
	CITROEN LIGHT VAN	BERLINGO (96-)	
85317	PEUGEOT LIGHT VAN	PARTNER (96-)	B0317
	CITROEN LIGHT VAN	BERLINGO (96-)	
	PEUGEOT LIGHT VAN	PARTNER (96-)	
	MITSUBISHI LIGHT VAN	MONTERO (00-)	
85383	MITSUBISHI LIGHT VAN	MONTERO (00-)	B0383
	MITSUBISHI LIGHT VAN	PAJERO (00-)	
	MITSUBISHI LIGHT VAN	PAJERO (00-)	
85383	MITSUBISHI LIGHT VAN	SHOGUN (00-)	B0383
	MITSUBISHI LIGHT VAN	SHOGUN (00-)	
	MITSUBISHI LIGHT VAN	MONTERO SPORT (98-)	
85384	MITSUBISHI LIGHT VAN	MONTERO SPORT (98-)	B0384
	MITSUBISHI LIGHT VAN	PAJERO SPORT (98-)	
85384	MITSUBISHI LIGHT VAN	PAJERO SPORT (98-)	B0384
	MERCEDES LIGHT VAN	VITO W 638 (96-)	
85403	MERCEDES LIGHT VAN	VITO W 638 (96-)	B0403
	CHEVROLET LIGHT VAN	LUMINA APV (97-)	
85408	CHEVROLET LIGHT VAN	MONTANA (97-)	B0408
	CHEVROLET LIGHT VAN	TRANS SPORT (97-)	
	CHEVROLET LIGHT VAN	VENTURE (97-)	
	OLDSMOBILE LIGHT VAN	SILHOUETTE (97-)	
	PONTIAC LIGHT VAN	MONTANA (97-)	
	PONTIAC LIGHT VAN	TRANS SPORT (97-)	
	PONTIAC LIGHT VAN	VENTURE (97-)	
	CHEVROLET LIGHT VAN	LUMINA APV (97-)	
85409	CHEVROLET LIGHT VAN	MONTANA (97-)	B0409
	CHEVROLET LIGHT VAN	TRANS SPORT (97-)	
	CHEVROLET LIGHT VAN	VENTURE (97-)	
	OLDSMOBILE LIGHT VAN	SILHOUETTE (97-)	
	PONTIAC LIGHT VAN	TRANS SPORT (97-)	
	PONTIAC LIGHT VAN	VENTURE (97-)	
	OPEL LIGHT VAN	FRONTERA A (92-)	
85425	FORD LIGHT VAN	TRANSIT (94-)	B0425
85426	FORD LIGHT VAN	TRANSIT (00-)	B0426
85433	FIAT LIGHT VAN	FIORINO (04-)	B0433
	OPEL LIGHT VAN	FRONTERA B (98-)	
	SEAT LIGHT VAN	INCA (95-)	
	SEAT LIGHT VAN	INCA (95-)	
85468	SEAT LIGHT VAN	INCA (95-)	B0468
	SEAT LIGHT VAN	INCA (95-)	
	SEAT LIGHT VAN	INCA (95-)	
	SEAT LIGHT VAN	INCA (95-)	
	SEAT LIGHT VAN	INCA (95-)	
	SEAT LIGHT VAN	INCA (95-)	
	SEAT LIGHT VAN	INCA (95-)	
85468	SEAT LIGHT VAN	INCA (95-)	B0468
	VOLKSWAGEN LIGHT VAN	CADDY (95-)	
	VOLKSWAGEN LIGHT VAN	CADDY (95-)	
	VOLKSWAGEN LIGHT VAN	CADDY (95-)	
	VOLKSWAGEN LIGHT VAN	CADDY (95-)	
	VOLKSWAGEN LIGHT VAN	CADDY (95-)	
	SEAT LIGHT VAN	INCA (95-)	

Nissens			DRAW.
85469	VOLKSWAGEN LIGHT VAN	CADDY (95-)	B0469
	SEAT LIGHT VAN	INCA (95-)	
	VOLKSWAGEN LIGHT VAN	CADDY (95-)	
	NISSAN LIGHT VAN	VANETTE CARGO (95-)	
	NISSAN LIGHT VAN	VANETTE CARGO (95-)	
85488	FORD LIGHT VAN	TRANSIT (94-)	B0488
85499	RENAULT LIGHT VAN	EXPRESS (91-)	
	RENAULT LIGHT VAN	EXTRA (91-)	
	RENAULT LIGHT VAN	RAPID (91-)	
	RENAULT LIGHT VAN	KANGOO (98-)	
	MERCEDES LIGHT VAN	209 D (76-)	
	MERCEDES LIGHT VAN	309 D (68-)	
90519	MERCEDES LIGHT VAN	407 D (81-)	O0002
	MERCEDES LIGHT VAN	409 D (77-)	
	MERCEDES LIGHT VAN	209 D (76-)	
	MERCEDES LIGHT VAN	309 D (68-)	
	MERCEDES LIGHT VAN	409 D (77-)	
90535	RENAULT LIGHT VAN	TRAFIC (89-)	O0033
	RENAULT LIGHT VAN	TRAFIC (97-)	
90583	MERCEDES LIGHT VAN	VITO W 638 (96-)	O0125
	CITROEN LIGHT VAN	JUMPER (02-)	
	CITROEN LIGHT VAN	RELAY (02-)	
90603	FIAT LIGHT VAN	DUCATO (02-)	
	PEUGEOT LIGHT VAN	BOXER (02-)	
	CITROEN LIGHT VAN	JUMPER (94-)	
	CITROEN LIGHT VAN	RELAY (94-)	
90604	FIAT LIGHT VAN	DUCATO (94-)	0000
	PEUGEOT LIGHT VAN	BOXER (94-)	
	VOLKSWAGEN LIGHT VAN	CADDY (04-)	
	VOLKSWAGEN LIGHT VAN	TOURAN (03-)	
90607	SEAT LIGHT VAN	INCA (95-)	O0292
	SEAT LIGHT VAN	INCA (95-)	
	SEAT LIGHT VAN	INCA (95-)	
	VOLKSWAGEN LIGHT VAN	CADDY (82-)	
	VOLKSWAGEN LIGHT VAN	CADDY (95-)	
	VOLKSWAGEN LIGHT VAN	CADDY (95-)	
	VOLKSWAGEN LIGHT VAN	CADDY (95-)	
	VOLKSWAGEN LIGHT VAN	CADDY (95-)	
	VOLKSWAGEN LIGHT VAN	CADDY (95-)	
	VOLKSWAGEN LIGHT VAN	CADDY (95-)	
	VOLKSWAGEN LIGHT VAN	CADDY (95-)	
	VOLKSWAGEN LIGHT VAN	CADDY (95-)	
	VOLKSWAGEN LIGHT VAN	CADDY (95-)	
	VOLKSWAGEN LIGHT VAN	LT (82-)	
	VOLKSWAGEN LIGHT VAN	LT (03-)	
	VOLKSWAGEN LIGHT VAN	TRANSPORTER T4 (90-)	
	VOLKSWAGEN LIGHT VAN	TRANSPORTER T4 (90-)	
	VOLKSWAGEN LIGHT VAN	TRANSPORTER T4 (90-)	
	VOLKSWAGEN LIGHT VAN	TRANSPORTER T4 (90-)	
	VOLKSWAGEN LIGHT VAN	TRANSPORTER T4 (90-)	
	VOLKSWAGEN LIGHT VAN	TRANSPORTER T4 (90-)	
	VOLKSWAGEN LIGHT VAN	TRANSPORTER T4 (90-)	
	VOLKSWAGEN LIGHT VAN	TRANSPORTER T4 (90-)	
	VOLKSWAGEN LIGHT VAN	TRANSPORTER T4 (90-)	
	VOLKSWAGEN LIGHT VAN	TRANSPORTER T4 (90-)	
	VOLKSWAGEN LIGHT VAN	TRANSPORTER T4 (90-)	
	VOLKSWAGEN LIGHT VAN	TRANSPORTER T4 (90-)	
	VOLKSWAGEN LIGHT VAN	CADDY (04-)	
	VOLKSWAGEN LIGHT VAN	CADDY (04-)	
	VOLKSWAGEN LIGHT VAN	TOURAN (03-)	
	VOLKSWAGEN LIGHT VAN	TRANSPORTER T5 (03-)	
	VOLKSWAGEN LIGHT VAN	TRANSPORTER T5 (03-)	

NISSENS' REFERENCE LIST

Nissens			DRAW.
90608	VOLKSWAGEN LIGHT VAN	TRANSPORTER T5 (03-)	O0293
	VOLKSWAGEN LIGHT VAN	TRANSPORTER T5 (03-)	
	VOLKSWAGEN LIGHT VAN	TRANSPORTER T5 (03-)	
	VOLKSWAGEN LIGHT VAN	TRANSPORTER T5 (03-)	
	HYUNDAI LIGHT VAN	H-100 PORTER (93-)	
	VOLKSWAGEN LIGHT VAN	TOUAREG (02-)	
	VOLKSWAGEN LIGHT VAN	TOUAREG (02-)	
	VOLKSWAGEN LIGHT VAN	TOUAREG (02-)	
	VOLKSWAGEN LIGHT VAN	TOUAREG (02-)	
	VOLKSWAGEN LIGHT VAN	TOUAREG (02-)	
	VOLKSWAGEN LIGHT VAN	TOUAREG (02-)	
	VOLKSWAGEN LIGHT VAN	TOUAREG (02-)	
	VOLKSWAGEN LIGHT VAN	TOUAREG (02-)	
	VOLKSWAGEN LIGHT VAN	TOUAREG (02-)	
	VOLKSWAGEN LIGHT VAN	TOUAREG (02-)	
	VOLKSWAGEN LIGHT VAN	TOUAREG (02-)	
	MERCEDES LIGHT VAN	VITO W 638 (96-)	
	MERCEDES LIGHT VAN	VITO W 638 (96-)	
	VOLKSWAGEN LIGHT VAN	TOUAREG (02-)	
	VOLKSWAGEN LIGHT VAN	TOUAREG (02-)	
	VOLKSWAGEN LIGHT VAN	TOUAREG (02-)	
	VOLKSWAGEN LIGHT VAN	TRANSPORTER T5 (03-)	
	VOLKSWAGEN LIGHT VAN	TRANSPORTER T5 (03-)	
	VOLKSWAGEN LIGHT VAN	TOUAREG (02-)	
	VOLKSWAGEN LIGHT VAN	TOUAREG (02-)	
	VOLKSWAGEN LIGHT VAN	TOUAREG (02-)	
	VOLKSWAGEN LIGHT VAN	TOUAREG (02-)	
	VOLKSWAGEN LIGHT VAN	TOUAREG (02-)	
	MAZDA LIGHT VAN	MPV LV52	
	MAZDA LIGHT VAN	MPV LV52	
	MAZDA LIGHT VAN	MPV LV (95-)	
	MAZDA LIGHT VAN	MPV LV (95-)	
	MAZDA LIGHT VAN	MPV LV52	
	MAZDA LIGHT VAN	MPV LV (95-)	
	MAZDA LIGHT VAN	MPV LV (95-)	
	MAZDA LIGHT VAN	MPV LV52	
92084	FORD LIGHT VAN	MAVERICK (93-)	K0074
	NISSAN LIGHT VAN	KING CAB D21 (85-)	
	NISSAN LIGHT VAN	KING CAB D21 (85-)	
	NISSAN LIGHT VAN	PICK UP D21 (85-)	
	NISSAN LIGHT VAN	PICK UP D21 (85-)	
	NISSAN LIGHT VAN	TERRANO (86-)	
92084	NISSAN LIGHT VAN	TERRANO (87-)	K0074
	NISSAN LIGHT VAN	TERRANO (87-)	
	NISSAN LIGHT VAN	TERRANO (93-)	
	LDV (96-) LIGHT VAN	CONVOY (98-)	
	LDV (96-) LIGHT VAN	CONVOY (98-)	
	TOYOTA LIGHT VAN	LAND CRUISER 80 (94-)	
92112	TOYOTA LIGHT VAN	4 RUNNER (85-)	K0100
	TOYOTA LIGHT VAN	HI-LUX (88-)	
92112	TOYOTA LIGHT VAN	HI-LUX (88-)	K0100
	TOYOTA LIGHT VAN	4 RUNNER (85-)	
92124	TOYOTA LIGHT VAN	4 RUNNER (85-)	K0112
	TOYOTA LIGHT VAN	HI-LUX (88-)	
92124	TOYOTA LIGHT VAN	HI-LUX (88-)	K0112
	VOLKSWAGEN LIGHT VAN	TRANSPORTER T4 (90-)	
92133	VOLKSWAGEN LIGHT VAN	TRANSPORTER T4 (90-)	K0121
92133	VOLKSWAGEN LIGHT VAN	TRANSPORTER T4 (90-)	K0121
92133	VOLKSWAGEN LIGHT VAN	TRANSPORTER T4 (90-)	K0121
92133	VOLKSWAGEN LIGHT VAN	TRANSPORTER T4 (90-)	K0121
92133	VOLKSWAGEN LIGHT VAN	TRANSPORTER T4 (90-)	K0121
92133	VOLKSWAGEN LIGHT VAN	TRANSPORTER T4 (90-)	K0121
92133	VOLKSWAGEN LIGHT VAN	TRANSPORTER T4 (90-)	K0121
92133	VOLKSWAGEN LIGHT VAN	TRANSPORTER T4 (90-)	K0121
92133	VOLKSWAGEN LIGHT VAN	TRANSPORTER T4 (90-)	K0121

Nissens			DRAW.
92133	VOLKSWAGEN LIGHT VAN	TRANSPORTER T4 (90-)	K0121
92133	VOLKSWAGEN LIGHT VAN	TRANSPORTER T4 (90-)	K0121
92133	VOLKSWAGEN LIGHT VAN	TRANSPORTER T4 (90-)	K0121
92133	VOLKSWAGEN LIGHT VAN	TRANSPORTER T4 (90-)	K0121
92133	VOLKSWAGEN LIGHT VAN	TRANSPORTER T4 (90-)	K0121
92133	VOLKSWAGEN LIGHT VAN	TRANSPORTER T4 (90-)	K0121
92133	VOLKSWAGEN LIGHT VAN	TRANSPORTER T4 (90-)	K0121
92133	VOLKSWAGEN LIGHT VAN	TRANSPORTER T4 (90-)	K0121
92133	VOLKSWAGEN LIGHT VAN	TRANSPORTER T4 (90-)	K0121
92133	VOLKSWAGEN LIGHT VAN	TRANSPORTER T4 (90-)	K0121
92135	SEAT LIGHT VAN	INCA (95-)	K0123
	SEAT LIGHT VAN	INCA (95-)	
	SEAT LIGHT VAN	INCA (95-)	
	SEAT LIGHT VAN	INCA (95-)	
	SEAT LIGHT VAN	INCA (95-)	
	SEAT LIGHT VAN	INCA (95-)	
	SEAT LIGHT VAN	INCA (95-)	
	SEAT LIGHT VAN	INCA (95-)	
	SEAT LIGHT VAN	INCA (95-)	
	SEAT LIGHT VAN	INCA (95-)	
	SEAT LIGHT VAN	INCA (95-)	
92135	VOLKSWAGEN LIGHT VAN	CADDY (95-)	K0123
	VOLKSWAGEN LIGHT VAN	CADDY (95-)	
	VOLKSWAGEN LIGHT VAN	CADDY (95-)	
	VOLKSWAGEN LIGHT VAN	CADDY (95-)	
	VOLKSWAGEN LIGHT VAN	CADDY (95-)	
	VOLKSWAGEN LIGHT VAN	CADDY (95-)	
	VOLKSWAGEN LIGHT VAN	CADDY (95-)	
	VOLKSWAGEN LIGHT VAN	CADDY (95-)	
	NISSAN LIGHT VAN	VANETTE (86-)	
	OPEL LIGHT VAN	FRONTERA A (92-)	
	OPEL LIGHT VAN	FRONTERA A (92-)	
92148	MERCEDES LIGHT VAN	VITO W 638 (96-)	K0171
	MERCEDES LIGHT VAN	VITO W 638 (96-)	
92150	OPEL LIGHT VAN	COMBO (93-)	K0136
	OPEL LIGHT VAN	COMBO (93-)	
	OPEL LIGHT VAN	COMBO (93-)	
92163	VOLKSWAGEN LIGHT VAN	CADDY (04-)	K0176
	VOLKSWAGEN LIGHT VAN	CADDY (04-)	
	VOLKSWAGEN LIGHT VAN	CADDY (04-)	
	VOLKSWAGEN LIGHT VAN	CADDY (04-)	
	VOLKSWAGEN LIGHT VAN	TOURAN (03-)	
	VOLKSWAGEN LIGHT VAN	TOURAN (03-)	
	VOLKSWAGEN LIGHT VAN	CADDY (04-)	
	VOLKSWAGEN LIGHT VAN	CADDY (04-)	
	VOLKSWAGEN LIGHT VAN	CADDY (04-)	
92164	VOLKSWAGEN LIGHT VAN	CADDY (04-)	K0192
	VOLKSWAGEN LIGHT VAN	TOURAN (03-)	
	VOLKSWAGEN LIGHT VAN	TOURAN (03-)	
	PONTIAC LIGHT VAN	G6 (05-)	
	PONTIAC LIGHT VAN	G6 (05-)	
	CITROEN LIGHT VAN	DISPATCH (95-)	
	CITROEN LIGHT VAN	DISPATCH (95-)	
	CITROEN LIGHT VAN	JUMPY (95-)	
	CITROEN LIGHT VAN	JUMPY (95-)	
92170	FIAT LIGHT VAN	SCUDO (96-)	K0143
	FIAT LIGHT VAN	SCUDO (96-)	
	PEUGEOT LIGHT VAN	E7 - EUROCAB	
	PEUGEOT LIGHT VAN	EXPERT (95-)	
	PEUGEOT LIGHT VAN	EXPERT (95-)	
	OPEL LIGHT VAN	COMBO (00-)	
	OPEL LIGHT VAN	COMBO (00-)	
	FORD LIGHT VAN	TRANSIT CONNECT (02-)	
	FORD LIGHT VAN	TRANSIT CONNECT (02-)	

NISSENS' REFERENCE LIST

Nissens			DRAW.
92194	FORD LIGHT VAN	TRANSIT (00-)	K0195
92194	FORD LIGHT VAN	TRANSIT (00-)	K0195
92194	FORD LIGHT VAN	TRANSIT (00-)	K0195
92205	CITROEN LIGHT VAN	BERLINGO (96-)	K0160
	CITROEN LIGHT VAN	BERLINGO (96-)	
	CITROEN LIGHT VAN	BERLINGO (02-)	
	CITROEN LIGHT VAN	BERLINGO (02-)	
92205	PEUGEOT LIGHT VAN	PARTNER (96-)	K0160
	PEUGEOT LIGHT VAN	PARTNER (96-)	
	PEUGEOT LIGHT VAN	PARTNER (02-)	
	PEUGEOT LIGHT VAN	PARTNER (02-)	
92206	FIAT LIGHT VAN	DOBLO (01-)	K0161
	FIAT LIGHT VAN	DOBLO (01-)	
	NISSAN LIGHT VAN	KUBISTAR (03-)	
92215	NISSAN LIGHT VAN	KUBISTAR (03-)	K0182
	RENAULT LIGHT VAN	KANGOO (98-)	
	RENAULT LIGHT VAN	KANGOO (98-)	
92218	FORD LIGHT VAN	MAVERICK (02-)	
	MAZDA LIGHT VAN	TRIBUTE (02-)	
	KIA LIGHT VAN	K-SERIE (04-)	
	KIA LIGHT VAN	K-SERIE (04-)	
92248	MERCEDES LIGHT VAN	VIANO W 639 (03-)	
	MERCEDES LIGHT VAN	VIANO W 639 (03-)	
92248	MERCEDES LIGHT VAN	VITO W 639 (03-)	
	MERCEDES LIGHT VAN	VIANO W 639 (03-)	
92249	MERCEDES LIGHT VAN	VIANO W 639 (03-)	
	MERCEDES LIGHT VAN	VITO W 639 (03-)	
92264	NISSAN LIGHT VAN	INTERSTAR (02-)	
	OPEL LIGHT VAN	ARENA (98-)	
	OPEL LIGHT VAN	MOVANO (98-)	
	RENAULT LIGHT VAN	MASTER (98-)	
	NISSAN LIGHT VAN	KING CAB D21 (85-)	
94024	NISSAN LIGHT VAN	KING CAB D21 (85-)	C0315
	NISSAN LIGHT VAN	PICK UP D21 (85-)	
	NISSAN LIGHT VAN	PICK UP D21 (85-)	
	NISSAN LIGHT VAN	TERRANO (86-)	
94024	NISSAN LIGHT VAN	TERRANO (87-)	C0315
	NISSAN LIGHT VAN	TERRANO (87-)	
	TOYOTA LIGHT VAN	HI-LUX (88-)	
	TOYOTA LIGHT VAN	HI-LUX (88-)	
94038	HYUNDAI LIGHT VAN	H-100 MINI BUS (93-)	C0393
	HYUNDAI LIGHT VAN	H-100 MINI BUS (93-)	
	HYUNDAI LIGHT VAN	H-100 PORTER (97-)	
	HYUNDAI LIGHT VAN	H-100 PORTER (97-)	
	HYUNDAI LIGHT VAN	H1 (97-)	
94038	HYUNDAI LIGHT VAN	H1 (97-)	C0393
	HYUNDAI LIGHT VAN	STAREX (93-)	
	HYUNDAI LIGHT VAN	STAREX (93-)	
	HYUNDAI LIGHT VAN	GALLOPER (91-)	
	TOYOTA LIGHT VAN	LANDCRUISER	
94052	TOYOTA LIGHT VAN	LAND CRUISER 60 (84-)	C0052
94053	TOYOTA LIGHT VAN	LAND CRUISER 100 (98-)	C0053
94117	LDV (96-) LIGHT VAN	CONVOY (98-)	C0237
	RENAULT LIGHT VAN	EXPRESS (91-)	
	RENAULT LIGHT VAN	EXTRA (91-)	
94132	RENAULT LIGHT VAN	RAPID (91-)	C0131
	TOYOTA LIGHT VAN	LAND CRUISER 80 (94-)	
	TOYOTA LIGHT VAN	LAND CRUISER 80 (90-)	
	CITROEN LIGHT VAN	BERLINGO (96-)	

Nissens			DRAW.
94200	PEUGEOT LIGHT VAN	PARTNER (96-)	C0209
	SEAT LIGHT VAN	INCA (95-)	
	SEAT LIGHT VAN	INCA (95-)	
	SEAT LIGHT VAN	INCA (95-)	
94204	SEAT LIGHT VAN	INCA (95-)	C0248
	SEAT LIGHT VAN	INCA (95-)	
	SEAT LIGHT VAN	INCA (95-)	
	SEAT LIGHT VAN	INCA (95-)	
	SEAT LIGHT VAN	INCA (95-)	
	SEAT LIGHT VAN	INCA (95-)	
	SEAT LIGHT VAN	INCA (95-)	
94204	SEAT LIGHT VAN	INCA (95-)	C0248
	VOLKSWAGEN LIGHT VAN	CADDY (95-)	
	VOLKSWAGEN LIGHT VAN	CADDY (95-)	
	VOLKSWAGEN LIGHT VAN	CADDY (95-)	
	VOLKSWAGEN LIGHT VAN	CADDY (95-)	
	VOLKSWAGEN LIGHT VAN	CADDY (95-)	
	VOLKSWAGEN LIGHT VAN	CADDY (95-)	
94204	VOLKSWAGEN LIGHT VAN	CADDY (95-)	C0248
	VOLKSWAGEN LIGHT VAN	CADDY (95-)	
	CITROEN LIGHT VAN	DISPATCH (95-)	
	CITROEN LIGHT VAN	DISPATCH (95-)	
	CITROEN LIGHT VAN	JUMPY (95-)	
	CITROEN LIGHT VAN	JUMPY (95-)	
	FIAT LIGHT VAN	SCUDO (96-)	
94210	FIAT LIGHT VAN	SCUDO (96-)	C0192
	PEUGEOT LIGHT VAN	E7 - EUROCAB	
	PEUGEOT LIGHT VAN	EXPERT (95-)	
	PEUGEOT LIGHT VAN	EXPERT (95-)	
	CITROEN LIGHT VAN	BERLINGO (96-)	
	PEUGEOT LIGHT VAN	PARTNER (96-)	
	MERCEDES LIGHT VAN	SPRINTER (95-)	
	MERCEDES LIGHT VAN	SPRINTER (95-)	
	MERCEDES LIGHT VAN	VITO W 638 (96-)	
	MERCEDES LIGHT VAN	VITO W 638 (96-)	
94228	OPEL LIGHT VAN	COMBO (93-)	C0239
	OPEL LIGHT VAN	COMBO (93-)	
	VAUXHALL LIGHT VAN	COMBO	
	RENAULT LIGHT VAN	EXPRESS (91-)	
94243	RENAULT LIGHT VAN	EXTRA (91-)	C0228
	RENAULT LIGHT VAN	RAPID (91-)	
	VOLKSWAGEN LIGHT VAN	LT (96-)	
	VOLKSWAGEN LIGHT VAN	LT (96-)	
94258	VOLKSWAGEN LIGHT VAN	LT (03-)	C0252
	CITROEN LIGHT VAN	BERLINGO (96-)	
94276	PEUGEOT LIGHT VAN	PARTNER (96-)	C0291
	VOLKSWAGEN LIGHT VAN	TRANSPORTER T4 (90-)	
	VOLKSWAGEN LIGHT VAN	TRANSPORTER T4 (90-)	
	VOLKSWAGEN LIGHT VAN	TRANSPORTER T4 (90-)	
94307	VOLKSWAGEN LIGHT VAN	TRANSPORTER T4 (90-)	C0276
94313	CITROEN LIGHT VAN	BERLINGO (96-)	C0321
	PEUGEOT LIGHT VAN	PARTNER (96-)	
	NISSAN LIGHT VAN	KUBISTAR (03-)	
	NISSAN LIGHT VAN	KUBISTAR (03-)	
94324	RENAULT LIGHT VAN	KANGOO (98-)	C0300
	RENAULT LIGHT VAN	KANGOO (98-)	
94325	OPEL LIGHT VAN	ARENA (98-)	C0301
	OPEL LIGHT VAN	MOVANO (98-)	
	RENAULT LIGHT VAN	MASTER (98-)	
94326	OPEL LIGHT VAN	ARENA (98-)	C0302
	OPEL LIGHT VAN	MOVANO (98-)	
	RENAULT LIGHT VAN	MASTER (98-)	
94352	MAZDA LIGHT VAN	MPV LV52	C0333
94383	NISSAN LIGHT VAN	PATROL (79-)	C0406
	NISSAN LIGHT VAN	PATROL Y60 (88-)	

NISSENS' REFERENCE LIST

Nissens			DRAW.
94383	NISSAN LIGHT VAN	PATROL Y60 (88-)	C0406
	CHEVROLET LIGHT VAN	LUMINA APV (89-)	
94393	CHEVROLET LIGHT VAN	MONTANA (89-)	C0439
	CHEVROLET LIGHT VAN	TRANS SPORT (89-)	
	CHEVROLET LIGHT VAN	VENTURE (89-)	
	OLDSMOBILE LIGHT VAN	SILHOUETTE (89-)	
	PONTIAC LIGHT VAN	MONTANA (89-)	
	PONTIAC LIGHT VAN	TRANS SPORT (89-)	
	PONTIAC LIGHT VAN	VENTURE (89-)	
	CHEVROLET LIGHT VAN	LUMINA APV (89-)	
94394	CHEVROLET LIGHT VAN	MONTANA (89-)	C0440
	CHEVROLET LIGHT VAN	TRANS SPORT (89-)	
	CHEVROLET LIGHT VAN	VENTURE (89-)	
	OLDSMOBILE LIGHT VAN	SILHOUETTE (89-)	
	PONTIAC LIGHT VAN	MONTANA (89-)	
	PONTIAC LIGHT VAN	TRANS SPORT (89-)	
	PONTIAC LIGHT VAN	VENTURE (89-)	
	TOYOTA LIGHT VAN	HI-LUX (88-)	
94396	TOYOTA LIGHT VAN	HI-LUX (88-)	C0375
94439	NISSAN LIGHT VAN	KUBISTAR (03-)	C0459
	RENAULT LIGHT VAN	KANGOO (98-)	
	RENAULT LIGHT VAN	KANGOO (98-)	
	FORD LIGHT VAN	WINDSTAR (94-)	
	FORD USA LIGHT VAN	AEROSTAR (85-)	
	FORD LIGHT VAN	EXPLORER (91-)	
94472	FORD USA LIGHT VAN	BRONCO (85-)	C0478
	FORD USA LIGHT VAN	RANGER (85-)	
	FORD USA LIGHT VAN	RANGER PICKUP (93-)	
	FORD LIGHT VAN	EXPLORER (91-)	
94474	FORD LIGHT VAN	PICKUP F-SER (85-)	C0480
94475	FORD USA LIGHT VAN	RANGER PICKUP (93-)	C0481
94476	FORD USA LIGHT VAN	RANGER PICKUP (98-)	C0482
94483	FORD LIGHT VAN	TRANSIT (94-)	C0489
94483	FORD LIGHT VAN	TRANSIT (94-)	C0489
94493	MITSUBISHI LIGHT VAN	L 300 (86-)	C0498
	NISSAN LIGHT VAN	PATHFINDER (97-)	
	FORD LIGHT VAN	MAVERICK (96-)	
94501	NISSAN LIGHT VAN	TERRANO (93-)	C0506
	NISSAN LIGHT VAN	TERRANO (96-)	
	TOYOTA LIGHT VAN	4 RUNNER (95-)	
94512	TOYOTA LIGHT VAN	LAND CRUISER 90 (96-)	C0515
	TOYOTA LIGHT VAN	4 RUNNER (85-)	
94513	TOYOTA LIGHT VAN	HI-LUX (88-)	C0516
	TOYOTA LIGHT VAN	HI-LUX (88-)	
94513	TOYOTA LIGHT VAN	HI-LUX (88-)	C0516
	TOYOTA LIGHT VAN	HI-LUX (97-)	
94517	TOYOTA LIGHT VAN	HI-LUX (97-)	C0520
94518	TOYOTA LIGHT VAN	HI-LUX (97-)	C0521
94524	VOLKSWAGEN LIGHT VAN	TRANSPORTER T4 (90-)	C0526
94524	VOLKSWAGEN LIGHT VAN	TRANSPORTER T4 (90-)	C0526
94524	VOLKSWAGEN LIGHT VAN	TRANSPORTER T4 (90-)	C0526
94524	VOLKSWAGEN LIGHT VAN	TRANSPORTER T4 (90-)	C0526
94524	VOLKSWAGEN LIGHT VAN	TRANSPORTER T4 (90-)	C0526
94524	VOLKSWAGEN LIGHT VAN	TRANSPORTER T4 (90-)	C0526
94524	VOLKSWAGEN LIGHT VAN	TRANSPORTER T4 (90-)	C0526
94524	VOLKSWAGEN LIGHT VAN	TRANSPORTER T4 (90-)	C0526
94524	VOLKSWAGEN LIGHT VAN	TRANSPORTER T4 (90-)	C0526

Nissens			DRAW.
94524	VOLKSWAGEN LIGHT VAN	TRANSPORTER T4 (90-)	C0526
94524	VOLKSWAGEN LIGHT VAN	TRANSPORTER T4 (90-)	C0526
94524	VOLKSWAGEN LIGHT VAN	TRANSPORTER T4 (90-)	C0526
94524	VOLKSWAGEN LIGHT VAN	TRANSPORTER T4 (90-)	C0526
94524	VOLKSWAGEN LIGHT VAN	TRANSPORTER T4 (90-)	C0526
94524	VOLKSWAGEN LIGHT VAN	TRANSPORTER T4 (90-)	C0526
94524	VOLKSWAGEN LIGHT VAN	TRANSPORTER T4 (90-)	C0526
94524	VOLKSWAGEN LIGHT VAN	TRANSPORTER T4 (90-)	C0526
94524	VOLKSWAGEN LIGHT VAN	TRANSPORTER T4 (90-)	C0526
94542	CITROEN LIGHT VAN	BERLINGO (02-)	C0544
	CITROEN LIGHT VAN	BERLINGO (02-)	
	PEUGEOT LIGHT VAN	PARTNER (02-)	
	PEUGEOT LIGHT VAN	PARTNER (02-)	
94546	OPEL LIGHT VAN	COMBO (00-)	C0548
	OPEL LIGHT VAN	COMBO (00-)	
	OPEL LIGHT VAN	COMBO (00-)	
94577	FORD LIGHT VAN	TRANSIT (00-)	C0577
94577	FORD LIGHT VAN	TRANSIT (00-)	C0577
94577	FORD LIGHT VAN	TRANSIT (00-)	C0577
94588	MERCEDES LIGHT VAN	VANEO (02-)	C0588
	MERCEDES LIGHT VAN	VANEO (02-)	
94604	VOLKSWAGEN LIGHT VAN	TRANSPORTER T5 (03-)	C0604
94604	VOLKSWAGEN LIGHT VAN	TRANSPORTER T5 (03-)	C0604
94604	VOLKSWAGEN LIGHT VAN	TRANSPORTER T5 (03-)	C0604
94604	VOLKSWAGEN LIGHT VAN	TRANSPORTER T5 (03-)	C0604
94604	VOLKSWAGEN LIGHT VAN	TRANSPORTER T5 (03-)	C0604
94604	VOLKSWAGEN LIGHT VAN	TRANSPORTER T5 (03-)	C0604
94604	VOLKSWAGEN LIGHT VAN	TRANSPORTER T5 (03-)	C0604
94604	VOLKSWAGEN LIGHT VAN	TRANSPORTER T5 (03-)	C0604
94611	PONTIAC LIGHT VAN	G6 (05-)	C0611
	MERCEDES LIGHT VAN	VANEO (02-)	
	MERCEDES LIGHT VAN	VANEO (02-)	
	NISSAN LIGHT VAN	NOTE (06-)	
	FIAT LIGHT VAN	DOBLO (01-)	
	FIAT LIGHT VAN	DOBLO (01-)	
	FIAT LIGHT VAN	DOBLO (01-)	
94657	NISSAN LIGHT VAN	KUBISTAR (03-)	C0657
	NISSAN LIGHT VAN	KUBISTAR (03-)	
94657	RENAULT LIGHT VAN	KANGOO (98-)	C0657
	RENAULT LIGHT VAN	KANGOO (98-)	
94659	NISSAN LIGHT VAN	INTERSTAR (02-)	C0659
	OPEL LIGHT VAN	ARENA (98-)	
	OPEL LIGHT VAN	MOVANO (98-)	
	RENAULT LIGHT VAN	MASTER (98-)	
94660	NISSAN LIGHT VAN	INTERSTAR (02-)	C0660
	OPEL LIGHT VAN	ARENA (98-)	
	OPEL LIGHT VAN	MOVANO (98-)	
	RENAULT LIGHT VAN	MASTER (98-)	
94664	FORD LIGHT VAN	TRANSIT CONNECT (02-)	C0664
94664	FORD LIGHT VAN	TRANSIT CONNECT (02-)	C0664
94667	VOLKSWAGEN LIGHT VAN	TOUAREG (02-)	C0667
	VOLKSWAGEN LIGHT VAN	TOUAREG (02-)	
94667	VOLKSWAGEN LIGHT VAN	TOUAREG (02-)	C0667
	VOLKSWAGEN LIGHT VAN	TOUAREG (02-)	

NISSENS' REFERENCE LIST

Nissens			DRAW.
94667	VOLKSWAGEN LIGHT VAN VOLKSWAGEN LIGHT VAN	TOUAREG (02-) TOUAREG (02-)	C0667
94667	VOLKSWAGEN LIGHT VAN VOLKSWAGEN LIGHT VAN	TOUAREG (02-) TOUAREG (02-)	C0667
94667	VOLKSWAGEN LIGHT VAN VOLKSWAGEN LIGHT VAN	TOUAREG (02-) TOUAREG (02-)	C0667
94667	VOLKSWAGEN LIGHT VAN NISSAN LIGHT VAN	TOUAREG (02-) PRIMASTAR (02-)	C0667
94671	OPEL LIGHT VAN OPEL LIGHT VAN RENAULT LIGHT VAN	VIVARO (01-) VIVARO (01-) TRAFIC (01-)	C0671
94671	RENAULT LIGHT VAN NISSAN LIGHT VAN OPEL LIGHT VAN	TRAFIC (01-) PRIMASTAR (02-) VIVARO (01-)	C0671
94672	OPEL LIGHT VAN RENAULT LIGHT VAN RENAULT LIGHT VAN	VIVARO (01-) TRAFIC (01-) TRAFIC (01-)	C0672
94674	MERCEDES LIGHT VAN MERCEDES LIGHT VAN	VIANO W 639 (03-) VIANO W 639 (03-)	C0674
94674	MERCEDES LIGHT VAN PONTIAC LIGHT VAN	VITO W 639 (03-) G6 (05-)	C0674
94676	PONTIAC LIGHT VAN NISSAN LIGHT VAN OPEL LIGHT VAN RENAULT LIGHT VAN	G6 (05-) PRIMASTAR (02-) VIVARO (01-) TRAFIC (01-)	C0676
94684	VOLKSWAGEN LIGHT VAN VOLKSWAGEN LIGHT VAN OPEL LIGHT VAN OPEL LIGHT VAN VOLKSWAGEN LIGHT VAN VOLKSWAGEN LIGHT VAN VOLKSWAGEN LIGHT VAN VOLKSWAGEN LIGHT VAN	TOURAN (03-) TOURAN (03-) FRONTERA B (98-) FRONTERA B (98-) CADDY (04-) CADDY (04-) CADDY (04-) CADDY (04-)	C0684
94700	CITROEN LIGHT VAN CITROEN LIGHT VAN CITROEN LIGHT VAN CITROEN LIGHT VAN	JUMPER (94-) JUMPER (94-) RELAY (94-) RELAY (94-)	C0700
94700	FIAT LIGHT VAN FIAT LIGHT VAN PEUGEOT LIGHT VAN PEUGEOT LIGHT VAN	DUCATO (94-) DUCATO (94-) BOXER (94-) BOXER (94-)	C0700
94703	MITSUBISHI LIGHT VAN MITSUBISHI LIGHT VAN	PAJERO (90-) PAJERO (90-)	C0703
94703	MITSUBISHI LIGHT VAN MITSUBISHI LIGHT VAN	SHOGUN (90-) SHOGUN (90-)	C0703
94721	OPEL LIGHT VAN OPEL LIGHT VAN FIAT LIGHT VAN	COMBO (00-) COMBO (00-) DOBLO (01-)	C0721
94729	FORD LIGHT VAN MAZDA LIGHT VAN	RANGER (98-) B 2500 (96-)	
94731	FORD LIGHT VAN MAZDA LIGHT VAN NISSAN LIGHT VAN RENAULT LIGHT VAN	MAVERICK (02-) TRIBUTE (02-) KUBISTAR (03-) KANGOO (98-)	C0731
94749	MITSUBISHI LIGHT VAN MITSUBISHI LIGHT VAN	PAJERO (90-) SHOGUN (90-)	C0749
94759	NISSAN LIGHT VAN NISSAN LIGHT VAN	KING CAB D22 (98-) KING CAB D22 (98-)	C0759
94759	NISSAN LIGHT VAN NISSAN LIGHT VAN	PICK UP D22 (98-) PICK UP D22 (98-)	C0759

Nissens			DRAW.
94784	MITSUBISHI LIGHT VAN MITSUBISHI LIGHT VAN	PAJERO (90-) PAJERO (90-)	C0784
94784	MITSUBISHI LIGHT VAN MITSUBISHI LIGHT VAN	SHOGUN (90-) SHOGUN (90-)	C0784
94786	NISSAN LIGHT VAN TOYOTA LIGHT VAN	VANETTE CARGO (95-) HI-ACE (95-)	C0786
94787	TOYOTA LIGHT VAN TOYOTA LIGHT VAN	HI-ACE (95-) HI-ACE (01-)	C0787
94790	MITSUBISHI LIGHT VAN MITSUBISHI LIGHT VAN	MONTERO SPORT (98-) MONTERO SPORT (98-)	C0790
94790	MITSUBISHI LIGHT VAN MITSUBISHI LIGHT VAN	PAJERO SPORT (98-) PAJERO SPORT (98-)	C0790
94797	CHEVROLET LIGHT VAN CHEVROLET LIGHT VAN CHEVROLET LIGHT VAN CHEVROLET LIGHT VAN OLDSMOBILE LIGHT VAN PONTIAC LIGHT VAN PONTIAC LIGHT VAN PONTIAC LIGHT VAN	LUMINA APV (97-) MONTANA (97-) TRANS SPORT (97-) VENTURE (97-) SILHOUETTE (97-) MONTANA (97-) TRANS SPORT (97-) VENTURE (97-)	C0797
94819	OPEL LIGHT VAN	FRONTERA A (92-)	C0819
94819	OPEL LIGHT VAN	FRONTERA A (92-)	C0819
94821	KIA LIGHT VAN	K-SERIE (04-)	
94822	KIA LIGHT VAN	K-SERIE (04-)	
94834	VOLKSWAGEN LIGHT VAN	TRANSPORTER T4 (90-)	
94834	VOLKSWAGEN LIGHT VAN	TRANSPORTER T4 (90-)	
94834	VOLKSWAGEN LIGHT VAN	TRANSPORTER T4 (90-)	
94834	VOLKSWAGEN LIGHT VAN	TRANSPORTER T4 (90-)	
94834	VOLKSWAGEN LIGHT VAN	TRANSPORTER T4 (90-)	
94834	VOLKSWAGEN LIGHT VAN	TRANSPORTER T4 (90-)	
94834	VOLKSWAGEN LIGHT VAN	TRANSPORTER T4 (90-)	
94834	VOLKSWAGEN LIGHT VAN	TRANSPORTER T4 (90-)	
94834	VOLKSWAGEN LIGHT VAN	TRANSPORTER T4 (90-)	
94834	VOLKSWAGEN LIGHT VAN	TRANSPORTER T4 (90-)	
94834	VOLKSWAGEN LIGHT VAN	TRANSPORTER T4 (90-)	
94834	VOLKSWAGEN LIGHT VAN	TRANSPORTER T4 (90-)	
94834	VOLKSWAGEN LIGHT VAN	TRANSPORTER T4 (90-)	
94834	VOLKSWAGEN LIGHT VAN	TRANSPORTER T4 (90-)	
94834	VOLKSWAGEN LIGHT VAN	TRANSPORTER T4 (90-)	
94834	VOLKSWAGEN LIGHT VAN	TRANSPORTER T4 (90-)	
94836	NISSAN LIGHT VAN NISSAN LIGHT VAN	ATLEON (97-) ATLEON (97-)	C0836
94836	NISSAN LIGHT VAN NISSAN LIGHT VAN	ECO (97-) ECO (97-)	C0836
94843	CHEVROLET LIGHT VAN CHEVROLET LIGHT VAN CHEVROLET LIGHT VAN CHEVROLET LIGHT VAN OLDSMOBILE LIGHT VAN PONTIAC LIGHT VAN PONTIAC LIGHT VAN PONTIAC LIGHT VAN	LUMINA APV (97-) MONTANA (97-) TRANS SPORT (97-) VENTURE (97-) SILHOUETTE (97-) MONTANA (97-) TRANS SPORT (97-) VENTURE (97-)	C0843
94863	FORD LIGHT VAN NISSAN LIGHT VAN NISSAN LIGHT VAN	MAVERICK (96-) TERRANO (96-) TERRANO (02-)	

NISSENS' REFERENCE LIST

Nissens			DRAW.
94864	MITSUBISHI LIGHT VAN	MONTERO (00-)	
	MITSUBISHI LIGHT VAN	MONTERO (00-)	
	MITSUBISHI LIGHT VAN	PAJERO (00-)	
94864	MITSUBISHI LIGHT VAN	PAJERO (00-)	
	MITSUBISHI LIGHT VAN	SHOGUN (00-)	
	MITSUBISHI LIGHT VAN	SHOGUN (00-)	
94865	MITSUBISHI LIGHT VAN	L 200 (96-)	
95046	MITSUBISHI LIGHT VAN	PAJERO (90-)	F0178
	MITSUBISHI LIGHT VAN	PAJERO (90-)	
	MITSUBISHI LIGHT VAN	SHOGUN (90-)	
	MITSUBISHI LIGHT VAN	SHOGUN (90-)	
	CITROEN LIGHT VAN	JUMPER (94-)	
	CITROEN LIGHT VAN	JUMPER (94-)	
	CITROEN LIGHT VAN	RELAY (94-)	
	CITROEN LIGHT VAN	RELAY (94-)	
	PEUGEOT LIGHT VAN	BOXER (94-)	
	PEUGEOT LIGHT VAN	BOXER (94-)	
	MAZDA LIGHT VAN	MPV LV (95-)	
	MAZDA LIGHT VAN	MPV LV (95-)	
	MAZDA LIGHT VAN	MPV LV52	
95181	MAZDA LIGHT VAN	MPV LV (95-)	F0271
95181	MAZDA LIGHT VAN	MPV LV (95-)	F0271
95188	VOLKSWAGEN LIGHT VAN	TRANSPORTER T4 (90-)	F0193
95188	VOLKSWAGEN LIGHT VAN	TRANSPORTER T4 (90-)	F0193
95188	VOLKSWAGEN LIGHT VAN	TRANSPORTER T4 (90-)	F0193
95188	VOLKSWAGEN LIGHT VAN	TRANSPORTER T4 (90-)	F0193
95188	VOLKSWAGEN LIGHT VAN	TRANSPORTER T4 (90-)	F0193
95188	VOLKSWAGEN LIGHT VAN	TRANSPORTER T4 (90-)	F0193
95188	VOLKSWAGEN LIGHT VAN	TRANSPORTER T4 (90-)	F0193
95188	VOLKSWAGEN LIGHT VAN	TRANSPORTER T4 (90-)	F0193
95188	VOLKSWAGEN LIGHT VAN	TRANSPORTER T4 (90-)	F0193
95188	VOLKSWAGEN LIGHT VAN	TRANSPORTER T4 (90-)	F0193
95188	VOLKSWAGEN LIGHT VAN	TRANSPORTER T4 (90-)	F0193
95188	VOLKSWAGEN LIGHT VAN	TRANSPORTER T4 (90-)	F0193
95188	VOLKSWAGEN LIGHT VAN	TRANSPORTER T4 (90-)	F0193
95188	VOLKSWAGEN LIGHT VAN	TRANSPORTER T4 (90-)	F0193
95188	VOLKSWAGEN LIGHT VAN	TRANSPORTER T4 (90-)	F0193
95188	VOLKSWAGEN LIGHT VAN	TRANSPORTER T4 (90-)	F0193
95188	VOLKSWAGEN LIGHT VAN	TRANSPORTER T4 (90-)	F0193
95188	VOLKSWAGEN LIGHT VAN	TRANSPORTER T4 (90-)	F0193
95188	VOLKSWAGEN LIGHT VAN	TRANSPORTER T4 (90-)	F0193
95291	NISSAN LIGHT VAN	PATROL (79-)	F0209
95292	NISSAN LIGHT VAN	VANETTE (86-)	F0210
95321	OPEL LIGHT VAN	COMBO (00-)	F0232
	OPEL LIGHT VAN	COMBO (00-)	
	FIAT LIGHT VAN	DOBLO (01-)	
95328	MERCEDES LIGHT VAN	VANEO (02-)	F0256
95328	MERCEDES LIGHT VAN	VANEO (02-)	F0256
95329	FORD LIGHT VAN	TRANSIT (00-)	F0263
95329	FORD LIGHT VAN	TRANSIT (00-)	F0263
95329	FORD LIGHT VAN	TRANSIT (00-)	F0263
95331	FORD LIGHT VAN	TRANSIT CONNECT (02-)	F0272

Nissens			DRAW.
95331	FORD LIGHT VAN	TRANSIT CONNECT (02-)	F0272
95338	PONTIAC LIGHT VAN	G6 (05-)	F0237
	PONTIAC LIGHT VAN	G6 (05-)	
	VOLKSWAGEN LIGHT VAN	TRANSPORTER T4 (90-)	
	VOLKSWAGEN LIGHT VAN	TRANSPORTER T4 (90-)	
	VOLKSWAGEN LIGHT VAN	TRANSPORTER T4 (90-)	
95342	VOLKSWAGEN LIGHT VAN	TRANSPORTER T4 (90-)	F0241
95342	VOLKSWAGEN LIGHT VAN	TRANSPORTER T4 (90-)	F0241
95342	VOLKSWAGEN LIGHT VAN	TRANSPORTER T4 (90-)	F0241
95342	VOLKSWAGEN LIGHT VAN	TRANSPORTER T4 (90-)	F0241
95342	VOLKSWAGEN LIGHT VAN	TRANSPORTER T4 (90-)	F0241
95342	VOLKSWAGEN LIGHT VAN	TRANSPORTER T4 (90-)	F0241
95342	VOLKSWAGEN LIGHT VAN	TRANSPORTER T4 (90-)	F0241
95342	VOLKSWAGEN LIGHT VAN	TRANSPORTER T4 (90-)	F0241
95342	VOLKSWAGEN LIGHT VAN	TRANSPORTER T4 (90-)	F0241
95342	VOLKSWAGEN LIGHT VAN	TRANSPORTER T4 (90-)	F0241
95342	VOLKSWAGEN LIGHT VAN	TRANSPORTER T4 (90-)	F0241
95342	VOLKSWAGEN LIGHT VAN	TRANSPORTER T4 (90-)	F0241
95342	VOLKSWAGEN LIGHT VAN	TRANSPORTER T4 (90-)	F0241
95342	VOLKSWAGEN LIGHT VAN	TRANSPORTER T4 (90-)	F0241
95342	VOLKSWAGEN LIGHT VAN	TRANSPORTER T4 (90-)	F0241
95342	VOLKSWAGEN LIGHT VAN	TRANSPORTER T4 (90-)	F0241
95346	CITROEN LIGHT VAN	BERLINGO (02-)	F0279
	CITROEN LIGHT VAN	BERLINGO (02-)	
	PEUGEOT LIGHT VAN	PARTNER (02-)	
	PEUGEOT LIGHT VAN	PARTNER (02-)	
	TOYOTA LIGHT VAN	LAND CRUISER 100 (98-)	
	TOYOTA LIGHT VAN	LAND CRUISER 100 (98-)	
	FORD LIGHT VAN	TRANSIT (94-)	
	FORD LIGHT VAN	TRANSIT (94-)	
	MERCEDES LIGHT VAN	VIANO W 639 (03-)	
	MERCEDES LIGHT VAN	VIANO W 639 (03-)	
	MERCEDES LIGHT VAN	VITO W 639 (03-)	
	VOLKSWAGEN LIGHT VAN	TOUAREG (02-)	
	VOLKSWAGEN LIGHT VAN	TOUAREG (02-)	
95359	VOLKSWAGEN LIGHT VAN	TOUAREG (02-)	F0266
	VOLKSWAGEN LIGHT VAN	TOUAREG (02-)	
	VOLKSWAGEN LIGHT VAN	TOUAREG (02-)	
95359	VOLKSWAGEN LIGHT VAN	TOUAREG (02-)	F0266
	VOLKSWAGEN LIGHT VAN	TOUAREG (02-)	
	VOLKSWAGEN LIGHT VAN	TOUAREG (02-)	
95359	VOLKSWAGEN LIGHT VAN	TOUAREG (02-)	F0266
	VOLKSWAGEN LIGHT VAN	TOUAREG (02-)	
	VOLKSWAGEN LIGHT VAN	TOUAREG (02-)	
95366	VOLKSWAGEN LIGHT VAN	TOURAN (03-)	
	VOLKSWAGEN LIGHT VAN	TOURAN (03-)	
	FORD LIGHT VAN	MAVERICK (02-)	
	MAZDA LIGHT VAN	TRIBUTE (02-)	
	RENAULT LIGHT VAN	KANGOO (98-)	
	RENAULT LIGHT VAN	KANGOO (98-)	
	OPEL LIGHT VAN	COMBO (00-)	
	VOLKSWAGEN LIGHT VAN	TRANSPORTER T4 (90-)	
96659	HYUNDAI LIGHT VAN	GALLOPER (98-)	
96662	HYUNDAI LIGHT VAN	H-100 (04-)	
96666	KIA LIGHT VAN	K-SERIE (04-)	
96669	HYUNDAI LIGHT VAN	H1 (97-)	
96683	VOLKSWAGEN LIGHT VAN	TRANSPORTER T5 (03-)	I0237

NISSENS' REFERENCE LIST

Nissens			DRAW.
96683	VOLKSWAGEN LIGHT VAN	TRANSPORTER T5 (03-)	I0237
96683	VOLKSWAGEN LIGHT VAN	TRANSPORTER T5 (03-)	I0237
96683	VOLKSWAGEN LIGHT VAN	TRANSPORTER T5 (03-)	I0237
96683	VOLKSWAGEN LIGHT VAN	TRANSPORTER T5 (03-)	I0237
96684	PONTIAC LIGHT VAN	G6 (05-)	I0238
	VOLKSWAGEN LIGHT VAN	TOUAREG (02-)	
	VOLKSWAGEN LIGHT VAN	TOUAREG (02-)	
	VOLKSWAGEN LIGHT VAN	TOUAREG (02-)	
	VOLKSWAGEN LIGHT VAN	TOUAREG (02-)	
	VOLKSWAGEN LIGHT VAN	TOUAREG (02-)	
96688	VOLKSWAGEN LIGHT VAN	TOUAREG (02-)	I0242
	VOLKSWAGEN LIGHT VAN	TOURAN (03-)	
96729	MERCEDES LIGHT VAN	VIANO W 639 (03-)	I0354
	MERCEDES LIGHT VAN	VITO W 639 (03-)	
96730	MERCEDES LIGHT VAN	VIANO W 639 (03-)	I0353
	MERCEDES LIGHT VAN	VITO W 639 (03-)	
96732	FORD LIGHT VAN	TRANSIT (00-)	I0322
96732	FORD LIGHT VAN	TRANSIT (00-)	I0322
96733	FORD LIGHT VAN	TRANSIT (00-)	I0321
96733	FORD LIGHT VAN	TRANSIT (00-)	I0321
96736	FIAT LIGHT VAN	DOBLO (01-)	I0320
96755	VOLKSWAGEN LIGHT VAN	TRANSPORTER T4 (90-)	I0345
96755	VOLKSWAGEN LIGHT VAN	TRANSPORTER T4 (90-)	I0345
96755	VOLKSWAGEN LIGHT VAN	TRANSPORTER T4 (90-)	I0345
96755	VOLKSWAGEN LIGHT VAN	TRANSPORTER T4 (90-)	I0345
96755	VOLKSWAGEN LIGHT VAN	TRANSPORTER T4 (90-)	I0345
96755	VOLKSWAGEN LIGHT VAN	TRANSPORTER T4 (90-)	I0345
96762	NISSAN LIGHT VAN	PRIMASTAR (02-)	I0342
	OPEL LIGHT VAN	VIVARO (01-)	
	RENAULT LIGHT VAN	TRAFIC (01-)	
96767	NISSAN LIGHT VAN	INTERSTAR (02-)	I0343
	OPEL LIGHT VAN	ARENA (98-)	
	OPEL LIGHT VAN	MOVANO (98-)	
	RENAULT LIGHT VAN	MASTER (98-)	
96769	VOLKSWAGEN LIGHT VAN	CADDY (95-)	I0185
	VOLKSWAGEN LIGHT VAN	CADDY (95-)	
	VOLKSWAGEN LIGHT VAN	CADDY (95-)	
	NISSAN LIGHT VAN	PRIMASTAR (02-)	
96775	OPEL LIGHT VAN	VIVARO (01-)	I0379
	RENAULT LIGHT VAN	TRAFIC (01-)	
	MERCEDES LIGHT VAN	VANEO (02-)	
96790	CITROEN LIGHT VAN	BERLINGO (02-)	I0340
	PEUGEOT LIGHT VAN	PARTNER (02-)	
	VOLKSWAGEN LIGHT VAN	CADDY (95-)	
	MERCEDES LIGHT VAN	SPRINTER (95-)	
96842	VOLKSWAGEN LIGHT VAN	LT (96-)	I0095
	VOLKSWAGEN LIGHT VAN	LT (03-)	
	MERCEDES LIGHT VAN	VITO W 638 (96-)	
	CITROEN LIGHT VAN	DISPATCH (95-)	

Nissens			DRAW.
96849	CITROEN LIGHT VAN	JUMPY (95-)	I0107
	FIAT LIGHT VAN	SCUDO (96-)	
	PEUGEOT LIGHT VAN	E7 - EUROCAB	
	PEUGEOT LIGHT VAN	EXPERT (95-)	
	CITROEN LIGHT VAN	JUMPER (94-)	
	CITROEN LIGHT VAN	JUMPER (02-)	
	CITROEN LIGHT VAN	RELAY (02-)	
	CITROEN LIGHT VAN	RELAY (94-)	
	FIAT LIGHT VAN	DUCATO (94-)	
	FIAT LIGHT VAN	DUCATO (02-)	
96889	PEUGEOT LIGHT VAN	BOXER (94-)	I0142
	PEUGEOT LIGHT VAN	BOXER (02-)	
	NISSAN LIGHT VAN	INTERSTAR (02-)	
	OPEL LIGHT VAN	ARENA (98-)	
	OPEL LIGHT VAN	MOVANO (98-)	
	RENAULT LIGHT VAN	MASTER (98-)	
	MERCEDES LIGHT VAN	VITO W 638 (96-)	
	LDV (96-) LIGHT VAN	CONVOY (98-)	
96898	OPEL LIGHT VAN	COMBO (00-)	I0167
	OPEL LIGHT VAN	COMBO (00-)	
	OPEL LIGHT VAN	COMBO (00-)	

NOTES

NOTES

COPYRIGHT:
Nissens A/S
Ormhøjgårdvej 9 . DK-8700 Horsens . Tel. +45 7626 2626 . Fax +45 7564 2205

All rights are reserved. Neither this catalogue nor parts of it may be copied in any way
without the written permission from Nissens A/S.

RESERVATIONS:
Reservations are made for any writing or printing errors.

OE NUMBERS:
All OE numbers are stated as a guide only, and for comparison purposes.
The Nissens references always have priority over other indications.

OPHAVSRET:
Nissens A/S
Ormhøjgårdvej 9 . DK-8700 Horsens . Tlf. +45 7626 2626 . Fax +45 7564 2205

Alle rettigheder forbeholdes.
Hverken katalog eller dele heraf må kopieres på nogen måde uden skriftlig tilladelse fra Nissens.

FORBEHOLD:
Der tages forbehold for eventuelle skrive- og trykfejl.

ORIGINALNUMRE:
Alle OE-numre er kun anført som vejledende og til brug ved sammenligninger.
Nissens-referencerne er til enhver tid overordnet øvrige angivelser.

URHEBERRECHT
Nissens A/S
Ormhøjgårdvej 9 . DK-8700 Horsens . Tel. +45 7626 2626 . Fax +45 7564 2205

Alle Rechte vorbehalten. Dieser Katalog oder Teile davon dürfen auf keine Weise
ohne schriftliche Erlaubnis von Nissens A/S kopiert werden.

VORBEHALT:
Eventuelle Schreib- und Druckfehler werden vorbehalten.

ORIGINALNR.
Alle Originalnr. sind nur als Anleitung und zu Vergleichszwecken angegeben.
Die Nissens Referenzen sind anderen Angaben immer übergeordnet.

DROIT DE PROPRIETE:
Nissens A/S
Ormhøjgårdvej 9 . DK-8700 Horsens . Tél. +45 7626 2626 . Fax +45 7564 2205

Tous les droits sont réservés. Ce catalogue ne peut être copié intégralement ou
partiellement sans l'autorisation écrite de Nissens A/S.

RESERVES:
Réserve faite de fautes de frappe ou d´impression

Numéros OE:
Tous les numéros d'origine son inscrits seulement à titre indicatif et pour faciliter la comparaison.
Les références Nissens prévalent toujours sur toutes autres indications.