VOLKSWAGEN

BORA (1J2) 10.98 -

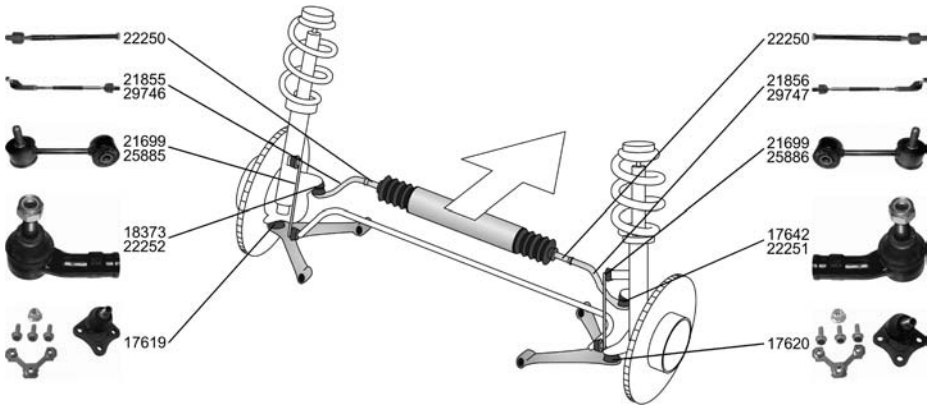

Spurstange / Tie Rod, steering ALL TYPES ausser/except for : 2.8 V6 4motion 03.99 -		**21855** **1J0 422 803 B** 22250 22252
Spurstange / Tie Rod, steering 1.4 16V 03.00 - 1.6 10.98 - . 1.6 16V 05.00 - 1.8 10.98 - 1.8 4motion 02.99 - 1.8 T, 110 kW 05.00 - 2.0 10.98 - 2.0 4motion 04.00 - 2.3 V5 10.98 - 10.00 2.3 V5 4motion 12.98 - 10.00 1.9 SDI 10.98 - 1.9 TDI 10.98 - 06.01 1.9 TDI 4motion, 66 kW 02.99 - 06.01 1.9 TDI 4motion, 74 kW 09.00 - 1.9 TDI 4motion, 96 kW 11.00 - 1.9 TDI 4motion, 110 kW 05.00 -		**21856** **1J0 422 804 B** 22250 22251
Spurstange / Tie Rod, steering 2.8 V6 4motion 03.99 -		**29746** **1J0 422 803 E** 22250 18373
Spurstange / Tie Rod, steering 2.8 V6 4motion 03.99 -		**29747** **1J0 422 804 E** 22250 17642
Spurstangenkopf / Tie-rod End Gewindeart: mit Rechtsgewinde / Thread Type: with right-hand thread mit Zubehör / With accessories 2.8 V6 4motion 03.99 -		**17642** **3A0 422 812**
Spurstangenkopf / Tie-rod End Gewindeart: mit Rechtsgewinde / Thread Type: with right-hand thread mit Zubehör / With accessories 2.8 V6 4motion 03.99 -		**18373** **3A0 422 811**

VOLKSWAGEN

BORA (1J2) 10.98 -

Spurstangenkopf / Tie-rod End
Befestigungsart: hängend / Fastening Type: Suspended
Innengewinde [mm] / Inner Thread [mm]:M14x1,5
Gewindeart: mit Rechtsgewinde / Thread Type: with right-hand thread

22251 **1J0 422 812 B**

1.4 16V	03.00 -
1.6	10.98 - .
1.6 16V	05.00 -
1.8	10.98 -
1.8 4motion	02.99 -
1.8 T, 110 kW	05.00 -
2.0	10.98 -
2.0 4motion	04.00 -
2.3 V5	10.98 - 10.00
2.3 V5 4motion	12.98 - 10.00
1.9 SDI	10.98 -
1.9 TDI	10.98 - 06.01
1.9 TDI 4motion, 66 kW	02.99 - 06.01
1.9 TDI 4motion, 74 kW	09.00 -
1.9 TDI 4motion, 96 kW	11.00 -
1.9 TDI 4motion, 110 kW	05.00 -

Spurstangenkopf / Tie-rod End
Befestigungsart: hängend / Fastening Type: Suspended
Innengewinde [mm] / Inner Thread [mm]:M14x1,5
Gewindeart: mit Rechtsgewinde / Thread Type: with right-hand thread

22252 **1J0 422 811 B**

1.4 16V	03.00 -
1.6	10.98 - .
1.6 16V	05.00 -
1.8	10.98 -
1.8 4motion	02.99 -
1.8 T, 110 kW	05.00 -
2.0	10.98 -
2.0 4motion	04.00 -
2.3 V5	10.98 - 10.00
2.3 V5 4motion	12.98 - 10.00
1.9 SDI	10.98 -
1.9 TDI	10.98 - 06.01
1.9 TDI 4motion, 66 kW	02.99 - 06.01
1.9 TDI 4motion, 74 kW	09.00 -
1.9 TDI 4motion, 96 kW	11.00 -
1.9 TDI 4motion, 110 kW	05.00 -

Axialgelenk, Spurstange / Axial Rod, tie rod
ohne Zubehör / without accessories

22250 **1J0 422 807 B**

1.4 16V	03.00 -
1.6, 74 kW	10.98 -
1.8	10.98 -
1.8 4motion	02.99 -
2.0	10.98 -
2.3 V5, 110 kW	10.98 - 10.00
2.3 V5 4motion, 110 kW	12.98 - 10.00
2.8 V6 4motion	03.99 -
1.9 SDI	10.98 -
1.9 TDI, 66 kW	10.98 - 06.01
1.9 TDI 4motion, 66 kW	02.99 - 06.01
1.9 TDI, 81 kW	10.98 - 06.01

Lenker, Radaufhängung / Track Control Arm
ohne Trag-/Führungsgelenk / without support/ steering link
mit Gummilager / with rubber mounting
nur in Verbindung mit / Only in connection with:17619
nur in Verbindung mit / Only in connection with:17620

22475 **1J0 407 151 C**
21113
10203

ALL TYPES ausser/except for :	
1.6 FSI	01.02 -
1.8 T, 132 kW	03.02 -

Trag-/Führungsgelenk / Support-/ Steering Link
Flanschlochdurchmesser [mm] / Flange Hole Diameter [mm]:8,55

17619 **1J0 407 365 C**

ALL TYPES

VOLKSWAGEN

BORA (1J2) 10.98 -

Trag-/Führungsgelenk / Support-/ Steering Link Flanschlochdurchmesser [mm] / Flange Hole Diameter [mm]:8,55			**17620** **1J0 407 366 C**
ALL TYPES			
Lagerung, Lenker / Mounting, wishbone		I12/A33	**10203** **357 407 182**
ALL TYPES			
Lagerung, Lenker / Mounting, wishbone		I13/A60	**21113** **1J0 407 181**
ALL TYPES			
Stange/Strebe, Stabilisator / Rod/Strut, stabiliser Pendelstange / Suspension Rod nur paarweise austauschen / Replace in pairs only		(x2)	**21699** **1J0 411 315 G**
ALL TYPES ausser/except for :			
1.6 FSI	01.02 -		
1.8 T, 132 kW	03.02 -		
1.9 TDI 4motion, 85 kW	02.99 - 06.01		
Stange/Strebe, Stabilisator / Rod/Strut, stabiliser Pendelstange / Suspension Rod			**25885** **1J0 411 315 D**
2.0 4motion	04.00 -		
2.3 V5 4motion	12.98 - 10.00		
2.8 V6 4motion	03.99 -		
1.9 TDI 4motion, 66 kW	02.99 - 06.01		
1.9 TDI 4motion, 74 kW	09.00 -		
1.9 TDI 4motion, 96 kW	11.00 -		
1.9 TDI 4motion, 110 kW	05.00 -		
1.8 4motion	02.99 -	05.1999-> Chass. 1J-Y-000 001->	
Stange/Strebe, Stabilisator / Rod/Strut, stabiliser Pendelstange / Suspension Rod			**25886** **1J0 411 316 D**
2.0 4motion	04.00 -		
2.3 V5 4motion	12.98 - 10.00		
2.8 V6 4motion	03.99 -		
1.9 TDI 4motion, 66 kW	02.99 - 06.01		
1.9 TDI 4motion, 74 kW	09.00 -		
1.9 TDI 4motion, 96 kW	11.00 -		
1.9 TDI 4motion, 110 kW	05.00 -		
1.8 4motion	02.99 -	05.1999-> Chass. 1J-Y-000 001->	
Faltenbalgsatz, Lenkung / Bellow Kit, steering system			**30177** **1J0 422 831 B**
1.4 16V	03.00 -		
1.6, 74 kW	10.98 -		
1.8	10.98 -		
1.8 4motion	02.99 -		
2.0	10.98 -		
2.3 V5, 110 kW	10.98 - 10.00		
2.3 V5 4motion, 110 kW	12.98 - 10.00		
2.8 V6 4motion	03.99 -		
1.9 SDI	10.98 -		
1.9 TDI, 66 kW	10.98 - 06.01		
1.9 TDI 4motion, 66 kW	02.99 - 06.01		
1.9 TDI, 81 kW	10.98 - 06.01		
1.9 TDI, 85 kW	12.98 - 06.01		
1.9 TDI 4motion, 85 kW	02.99 - 06.01		

VOLKSWAGEN

BORA (1J2) 10.98 -

Stange/Strebe, Stabilisator / Rod/Strut, stabiliser
Pendelstange / Suspension Rod
für Fahrzeuge ohne Schlechtwegeausführung / For vehicles without off-road suspension
mit Zubehör / With accessories

(x2)

21683 **1J0 505 466 B**

1.8 4motion	02.99 -
2.3 V5 4motion, 110 kW	12.98 - 10.00
2.8 V6 4motion	03.99 -
1.9 TDI 4motion, 66 kW	02.99 - 06.01
1.9 TDI 4motion, 85 kW	02.99 - 06.01

Stange/Strebe, Stabilisator / Rod/Strut, stabiliser
Pendelstange / Suspension Rod
für Fahrzeuge mit Schlechtwegeausführung / for vehicles with off-road suspension
mit Zubehör / With accessories

(x2)

21698 **1J0 505 466 C**

1.8 4motion	02.99 -
2.3 V5 4motion, 110 kW	12.98 - 10.00
2.8 V6 4motion	03.99 -
1.9 TDI 4motion, 66 kW	02.99 - 06.01
1.9 TDI 4motion, 85 kW	02.99 - 06.01

Achskörperlager / Mounting, axle body
Hydrolager paarweise durch konventionelles Lager ersetzen. / change hydro bearing in pairs by conventional bearing

A71,40

21236 **1J0 501 541 C**

1.4 16V	03.00 -
1.6	10.98 - .
1.6 16V	05.00 -
1.6 FSI	01.02 -
1.8	10.98 -
1.8 T	05.00 - .
2.0	10.98 -
2.3 V5	10.98 - 10.00
1.9 SDI	10.98 -
1.9 TDI	10.98 - 06.01

Achskörperlager / Mounting, axle body
mit Zubehör / With accessories

27627 **1J0 501 541 C**

1.4 16V	03.00 -
1.6	10.98 - .
1.6 16V	05.00 -
1.6 FSI	01.02 -
1.8	10.98 -
1.8 T	05.00 - .
2.0	10.98 -
2.3 V5	10.98 - 10.00
1.9 SDI	10.98 -
1.9 TDI	10.98 - 06.01

BORA Variant/Estate/Break (1J6) 05.99 -

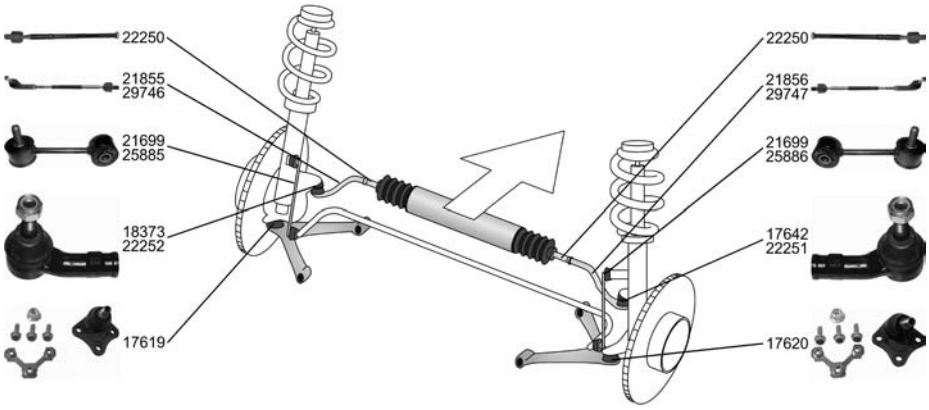

Spurstange / Tie Rod, steering

21855 **1J0 422 803 B**
22250
22252

ALL TYPES ausser/except for :

2.0 4motion	04.00 -
2.8 V6 4motion	05.99 -

VOLKSWAGEN

BORA Variant/Estate/Break (1J6) 05.99 -

Spurstange / Tie Rod, steering

1.6	10.98 - .
1.6 16V	02.00 -
1.8 4motion	05.99 -
1.8	05.00 -
2.0	05.99 -
2.0 4motion	04.00 -
2.3 V5	05.99 - 10.00
2.3 V5 4motion	05.99 - 10.00
1.9 TDI, 74 kW	09.00 -
1.9 TDI 4motion, 74 kW	09.00 -
1.9 TDI, 81 kW	05.99 - 06.01
1.9 TDI, 85 kW	05.99 - 06.01
1.9 TDI 4motion, 85 kW	05.99 - 06.01
1.9 TDI, 96 kW	11.00 -
1.9 TDI 4motion, 96 kW	11.00 -

21856 1J0 422 804 B
22250
22251

Spurstange / Tie Rod, steering

2.8 V6 4motion	05.99 -

29746 1J0 422 803 E
22250
18373

Spurstange / Tie Rod, steering

2.8 V6 4motion	05.99 -

29747 1J0 422 804 E
22250
17642

Spurstangenkopf / Tie-rod End
Gewindeart: mit Rechtsgewinde / Thread Type: with right-hand thread
mit Zubehör / With accessories

2.8 V6 4motion	05.99 -

17642 3A0 422 812

Spurstangenkopf / Tie-rod End
Gewindeart: mit Rechtsgewinde / Thread Type: with right-hand thread
mit Zubehör / With accessories

2.8 V6 4motion	05.99 -

18373 3A0 422 811

Spurstangenkopf / Tie-rod End
Befestigungsart: hängend / Fastening Type: Suspended
Innengewinde [mm] / Inner Thread [mm]:M14x1,5
Gewindeart: mit Rechtsgewinde / Thread Type: with right-hand thread

1.6	10.98 - .
1.6 16V	02.00 -
1.8 4motion	05.99 -
1.8	05.00 -
2.0	05.99 -
2.0 4motion	04.00 -
2.3 V5	05.99 - 10.00
2.3 V5 4motion	05.99 - 10.00
1.9 TDI, 74 kW	09.00 -
1.9 TDI 4motion, 74 kW	09.00 -
1.9 TDI, 81 kW	05.99 - 06.01
1.9 TDI, 85 kW	05.99 - 06.01
1.9 TDI 4motion, 85 kW	05.99 - 06.01
1.9 TDI, 96 kW	11.00 -
1.9 TDI 4motion, 96 kW	11.00 -

22251 1J0 422 812 B

Spurstangenkopf / Tie-rod End
Befestigungsart: hängend / Fastening Type: Suspended
Innengewinde [mm] / Inner Thread [mm]:M14x1,5
Gewindeart: mit Rechtsgewinde / Thread Type: with right-hand thread

1.6	10.98 - .
1.6 16V	02.00 -
1.8 4motion	05.99 -
1.8	05.00 -
2.0	05.99 -
2.0 4motion	04.00 -
2.3 V5	05.99 - 10.00
2.3 V5 4motion	05.99 - 10.00
1.9 TDI, 74 kW	09.00 -
1.9 TDI 4motion, 74 kW	09.00 -
1.9 TDI, 81 kW	05.99 - 06.01
1.9 TDI, 85 kW	05.99 - 06.01
1.9 TDI 4motion, 85 kW	05.99 - 06.01
1.9 TDI, 96 kW	11.00 -
1.9 TDI 4motion, 96 kW	11.00 -

22252 1J0 422 811 B

VOLKSWAGEN

BORA Variant/Estate/Break (1J6) 05.99 -

Axialgelenk, Spurstange / Axial Rod, tie rod
ohne Zubehör / without accessories

22250 **1J0 422 807 B**

1.6, 74 kW	10.98 -
2.0	05.99 -
2.3 V5, 110 kW	05.99 - 10.00
2.3 V5 4motion, 110 kW	05.99 - 10.00
2.8 V6 4motion	05.99 -
1.9 TDI, 81 kW	05.99 - 06.01
1.9 TDI, 85 kW	05.99 - 06.01
1.9 TDI 4motion, 85 kW	05.99 - 06.01

Lenker, Radaufhängung / Track Control Arm
ohne Trag-/Führungsgelenk / without support/ steering link
mit Gummilager / with rubber mounting
nur in Verbindung mit / Only in connection with:17619
nur in Verbindung mit / Only in connection with:17620

22475 **1J0 407 151 C**
21113
10203

1.6	10.98 - .
1.6 16V	02.00 -
1.8 4motion	05.99 -
1.8	05.00 -
2.0	05.99 -
2.0 4motion	04.00 -
2.3 V5	05.99 - 10.00
2.3 V5 4motion	05.99 - 10.00
2.8 V6 4motion	05.99 -
1.9 TDI, 66 kW	05.99 - 06.01
1.9 TDI, 74 kW	09.00 -
1.9 TDI 4motion, 74 kW	09.00 -
1.9 TDI, 81 kW	05.99 - 06.01
1.9 TDI, 85 kW	05.99 - 06.01
1.9 TDI 4motion, 85 kW	05.99 - 06.01
1.9 TDI, 96 kW	11.00 -
1.9 TDI 4motion, 96 kW	11.00 -

Trag-/Führungsgelenk / Support-/ Steering Link
Flanschlochdurchmesser [mm] / Flange Hole Diameter [mm]:8,55

17619 **1J0 407 365 C**

ALL TYPES ausser/except for :

1.4 16V	09.01 -
2.0 4motion	04.00 -

Trag-/Führungsgelenk / Support-/ Steering Link
Flanschlochdurchmesser [mm] / Flange Hole Diameter [mm]:8,55

17620 **1J0 407 366 C**

ALL TYPES ausser/except for :

1.4 16V	09.01 -
2.0 4motion	04.00 -

Lagerung, Lenker / Mounting, wishbone I12/A33

10203 **357 407 182**

ALL TYPES ausser/except for :

2.0 4motion	04.00 -

Lagerung, Lenker / Mounting, wishbone I13/A60

21113 **1J0 407 181**

ALL TYPES ausser/except for :

2.0 4motion	04.00 -

VOLKSWAGEN

BORA Variant/Estate/Break (1J6) 05.99 -

Stange/Strebe, Stabilisator / Rod/Strut, stabiliser Pendelstange / Suspension Rod nur paarweise austauschen / Replace in pairs only		(x2)	**21699** **1J0 411 315 G**
1.6	10.98 - .		
1.6 16V	02.00 -		
1.8 4motion	05.99 -		
1.8	05.00 -		
2.0	05.99 -		
2.0 4motion	04.00 -		
2.3 V5	05.99 - 10.00		
2.3 V5 4motion	05.99 - 10.00		
1.9 TDI, 74 kW	09.00 -		
1.9 TDI 4motion, 74 kW	09.00 -		
1.9 TDI, 81 kW	05.99 - 06.01		
1.9 TDI, 85 kW	05.99 - 06.01		
1.9 TDI 4motion, 85 kW	05.99 - 06.01		
1.9 TDI, 96 kW	11.00 -		
1.9 TDI 4motion, 96 kW	11.00 -		
Stange/Strebe, Stabilisator / Rod/Strut, stabiliser Pendelstange / Suspension Rod			**25885** **1J0 411 315 D**
1.8 4motion	05.99 -		
2.0 4motion	04.00 -		
2.3 V5 4motion	05.99 - 10.00		
2.8 V6 4motion	05.99 -		
1.9 TDI 4motion	05.99 - 06.01		
Stange/Strebe, Stabilisator / Rod/Strut, stabiliser Pendelstange / Suspension Rod			**25886** **1J0 411 316 D**
1.8 4motion	05.99 -		
2.0 4motion	04.00 -		
2.3 V5 4motion	05.99 - 10.00		
2.8 V6 4motion	05.99 -		
1.9 TDI 4motion	05.99 - 06.01		
Faltenbalgsatz, Lenkung / Bellow Kit, steering system			**30177** **1J0 422 831 B**
1.6, 74 kW	10.98 -		
1.8 4motion	05.99 -		
2.0	05.99 -		
2.3 V5, 110 kW	05.99 - 10.00		
2.3 V5 4motion, 110 kW	05.99 - 10.00		
2.8 V6 4motion	05.99 -		
1.9 TDI, 66 kW	05.99 - 06.01		
1.9 TDI, 81 kW	05.99 - 06.01		
1.9 TDI, 85 kW	05.99 - 06.01		
1.9 TDI 4motion, 85 kW	05.99 - 06.01		

Stange/Strebe, Stabilisator / Rod/Strut, stabiliser Pendelstange / Suspension Rod für Fahrzeuge ohne Schlechtwegeausführung / For vehicles without off-road suspension mit Zubehör / With accessories		(x2)	**21683** **1J0 505 466 B**
1.8 4motion	05.99 -		
2.3 V5 4motion, 110 kW	05.99 - 10.00		
2.8 V6 4motion	05.99 -		
1.9 TDI 4motion, 85 kW	05.99 - 06.01		
Stange/Strebe, Stabilisator / Rod/Strut, stabiliser Pendelstange / Suspension Rod für Fahrzeuge mit Schlechtwegeausführung / for vehicles with off-road suspension mit Zubehör / With accessories		(x2)	**21698** **1J0 505 466 C**
1.8 4motion	05.99 -		
2.3 V5 4motion, 110 kW	05.99 - 10.00		
2.8 V6 4motion	05.99 -		
1.9 TDI 4motion, 85 kW	05.99 - 06.01		

VOLKSWAGEN

BORA Variant/Estate/Break (1J6) 05.99 -

Achskörperlager / Mounting, axle body
Hydrolager paarweise durch konventionelles Lager ersetzen. / change hydro bearing in pairs by conventional bearing

A71,40 — **21236** — **1J0 501 541 C**

1.4 16V	09.01 -
1.6	10.98 - .
1.6 16V	02.00 -
1.6 FSI	01.02 -
1.8	05.00 -
1.8 T	05.02 -
2.0	05.99 -
2.3 V5	05.99 - 10.00
1.9 TDI	05.99 - 06.01

Achskörperlager / Mounting, axle body
mit Zubehör / With accessories

27627 — **1J0 501 541 C**

1.4 16V	09.01 -
1.6	10.98 - .
1.6 16V	02.00 -
1.6 FSI	01.02 -
1.8	05.00 -
1.8 T	05.02 -
2.0	05.99 -
2.3 V5	05.99 - 10.00
1.9 TDI	05.99 - 06.01

CADDY I (14) 08.82 - 07.92

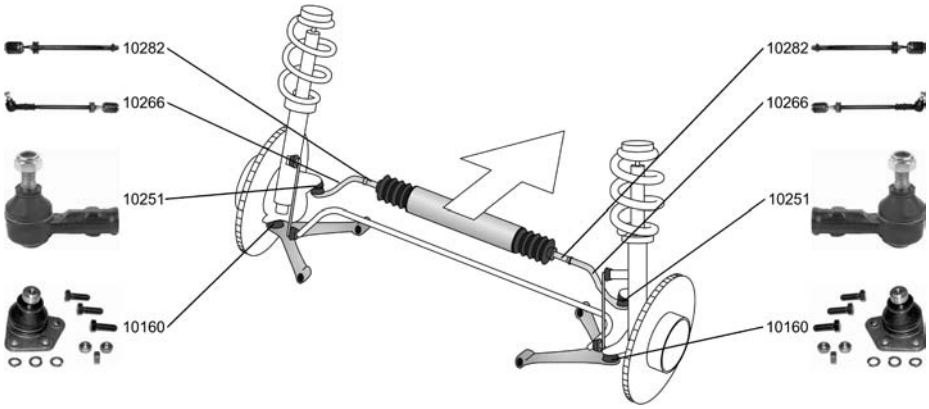

Spurstange / Tie Rod, steering
Konusmaß [mm] / Cone Size [mm]:14
Rohr-Ø [mm] / Pipe Ø [mm]:14

10266

1.5	08.82 - 07.83
1.6	01.83 - 07.92
1.8	08.85 - 07.92
1.6 D	08.82 - 07.92

Spurstangenkopf / Tie-rod End
Konusmaß [mm] / Cone Size [mm]:14
Innengewinde [mm] / Inner Thread [mm]:M14x1,5
Gewindeart: mit Rechtsgewinde / Thread Type: with right-hand thread
mit Zubehör / With accessories
Gewindemaß / Thread Size:M14x1,5

10251 — **171 419 812**

1.5	08.82 - 07.83
1.6	01.83 - 07.92
1.8	08.85 - 07.92
1.6 D	08.82 - 07.92

Axialgelenk, Spurstange / Axial Rod, tie rod
Gewindemaß / Thread Size:M22x1,5
Gewindeart: mit Rechtsgewinde / Thread Type: with right-hand thread
für OE / for OE 025 390 045 617

10282 — **171 419 807 A**

1.5	08.82 - 07.83
1.6	01.83 - 07.92
1.8	08.85 - 07.92
1.6 D	08.82 - 07.92

VOLKSWAGEN

CADDY I (14) 08.82 - 07.92

Lenker, Radaufhängung / Track Control Arm ohne Trag-/Führungsgelenk / without support/ steering link ohne Gummilager / without rubber mounting			**10165** **171 407 153 D**
1.5	08.82 - 07.83		
1.6	01.83 - 07.92		
1.8	08.85 - 07.92		
1.6 D	08.82 - 07.92		
Trag-/Führungsgelenk / Support-/ Steering Link		A17	**10160** **171 407 365 F**
1.5	08.82 - 07.83		
1.6	01.83 - 07.92		
1.8	08.85 - 07.92		
1.6 D	08.82 - 07.92		
Lagerung, Lenker / Mounting, wishbone			**10202** **171 407 182 D**
1.5	08.82 - 07.83		
1.6	01.83 - 07.92		
1.8	08.85 - 07.92		
1.6 D	08.82 - 07.92		
Faltenbalgsatz, Lenkung / Bellow Kit, steering system			**30117** **171 419 832 C/S**
1.5	08.82 - 07.83		
1.6	01.83 - 07.92		
1.8	08.85 - 07.92		
1.6 D	08.82 - 07.92		

CADDY II Kombi (9K9B) 11.95 - 01.04

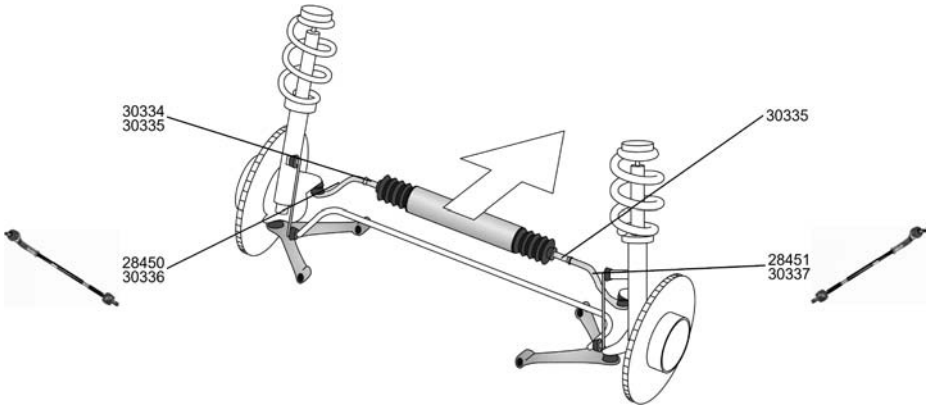

Spurstange / Tie Rod, steering		**28450** **6K0 422 803 D**
ALL TYPES		
Spurstange / Tie Rod, steering		**28451** **6K0 422 804 D**
ALL TYPES		
Spurstange / Tie Rod, steering		**30336** **6K0 422 803 E**
ALL TYPES	Reifenabmessung / Tyre Size:185/60 R14 H	
Spurstange / Tie Rod, steering		**30337** **6K0 422 804 E**
ALL TYPES	Reifenabmessung / Tyre Size:185/60 R14 H	
Axialgelenk, Spurstange / Axial Rod, tie rod		**30334** **6K0 422 807 D**
ALL TYPES		

VOLKSWAGEN

CADDY II Kombi (9K9B) 11.95 - 01.04

Axialgelenk, Spurstange / Axial Rod, tie rod Gewindemaß / Thread Size:M14x1,5		**30335**	**6K0 422 804 F** **6K0 422 807 F**
ALL TYPES	Reifenabmessung / Tyre Size:185/60 R14 H		

CADDY II Kasten/Box/Furgón/Van (9K9) 11.95 - 01.04

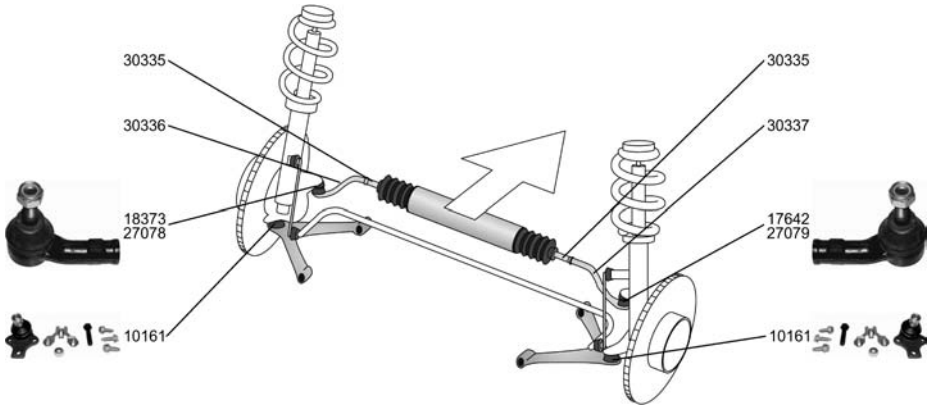

Spurstange / Tie Rod, steering		**30336**	**6K0 422 803 E**
ALL TYPES	Reifenabmessung / Tyre Size:185/60 R14 H		
Spurstange / Tie Rod, steering		**30337**	**6K0 422 804 E**
ALL TYPES	Reifenabmessung / Tyre Size:185/60 R14 H		
Spurstangenkopf / Tie-rod End Gewindeart: mit Rechtsgewinde / Thread Type: with right-hand thread mit Zubehör / With accessories		**17642**	**3A0 422 812**
ALL TYPES ausser/except for : 75 1.6 11.95 - 05.97	->Chass. 9K-1-523 000		
Spurstangenkopf / Tie-rod End Gewindeart: mit Rechtsgewinde / Thread Type: with right-hand thread mit Zubehör / With accessories		**18373**	**3A0 422 811**
ALL TYPES ausser/except for : 75 1.6 11.95 - 05.97	->Chass. 9K-1-523 000		
Spurstangenkopf / Tie-rod End mit Zubehör / With accessories		**27078**	**6K0 422 811**
ALL TYPES ausser/except for : 75 1.6 11.95 - 05.97	Chass. 9K-1-523 001->		
Spurstangenkopf / Tie-rod End mit Zubehör / With accessories		**27079**	**6K0 422 812**
ALL TYPES ausser/except for : 75 1.6 11.95 - 05.97	Chass. 9K-1-523 001->		
Axialgelenk, Spurstange / Axial Rod, tie rod Gewindemaß / Thread Size:M14x1,5		**30335**	**6K0 422 804 F** **6K0 422 807 F**
ALL TYPES	Reifenabmessung / Tyre Size:185/60 R14 H		

VOLKSWAGEN

CADDY II Kasten/Box/Furgón/Van (9K9) 11.95 - 01.04

Lenker, Radaufhängung / Track Control Arm ohne Trag-/Führungsgelenk / without support/ steering link mit Gummilager / with rubber mounting nur in Verbindung mit / Only in connection with:10169/10161			**10172** **191 407 151 B** 10203 10205
ALL TYPES ausser/except for :			
75 1.6	11.95 - 05.97		
Trag-/Führungsgelenk / Support-/ Steering Link mit Zubehör / With accessories für OE / for OE 191 407 151 B			**10161** **357 407 365**
ALL TYPES ausser/except for :			
75 1.6	11.95 - 05.97		
Lagerung, Lenker / Mounting, wishbone		I12/A33	**10203** **357 407 182**
ALL TYPES			
Lagerung, Lenker / Mounting, wishbone ohne Montagehülsen / without mounting sleeve			**10205** **191 407 181 E**
ALL TYPES			
Lagerung, Lenker / Mounting, wishbone mit Montagehülsen / with mounting sleeve			**25352** **191 407 181 E**
ALL TYPES			
Stabilisatorlager / Mounting, Stabilizer		I17	**14341** **191 411 314**
ALL TYPES ausser/except for :		->04.1997	
75 1.6	11.95 - 05.97	->Chass. 9K-V-525 700	
1.4	08.00 - 01.04		
Stabilisatorlager / Mounting, Stabilizer		I19	**27461** **1H0 411 314**
60 1.4	11.95 - 01.04	Mot. AUD 01.1997-> Chass. 9K-V-525 701-> Durchmesser Stabilisator [mm] / Stabilizer Diameter [mm]:20	
1.9 D 1.9 SDI	11.95 - 01.04 11.95 - 01.04	01.1997-> Chass. 9K-V-525 701-> Durchmesser Stabilisator [mm] / Stabilizer Diameter [mm]:20	
75 1.6	11.95 - 09.00	Mot. 1F 01.1997-> Chass. 9K-V-525 701-> Durchmesser Stabilisator [mm] / Stabilizer Diameter [mm]:20	
1.9 TDI	09.96 - 01.04	Mot. 1Z 01.1997-> Chass. 9K-V-525 701-> Durchmesser Stabilisator [mm] / Stabilizer Diameter [mm]:20	
1.4	08.00 - 01.04	Chass. 9K-V-525 701-> Durchmesser Stabilisator [mm] / Stabilizer Diameter [mm]:20	
Lagerung, Stabilisatorkoppelstange **Mounting, stabilizer coupling rod** Pendelstange / Suspension Rod			**17400** **191 411 327**
ALL TYPES ausser/except for :		->Chass. 9K-V-525 700	
1.4	08.00 - 01.04		
75 1.6	11.95 - 05.97		

VOLKSWAGEN

CADDY II Kasten/Box/Furgón/Van (9K9) 11.95 - 01.04

Faltenbalgsatz, Lenkung / Bellow Kit, steering system ALL TYPES		**30111** **1H0 422 831 B**

CADDY II Pickup (9U7) 10.97 - 12.00

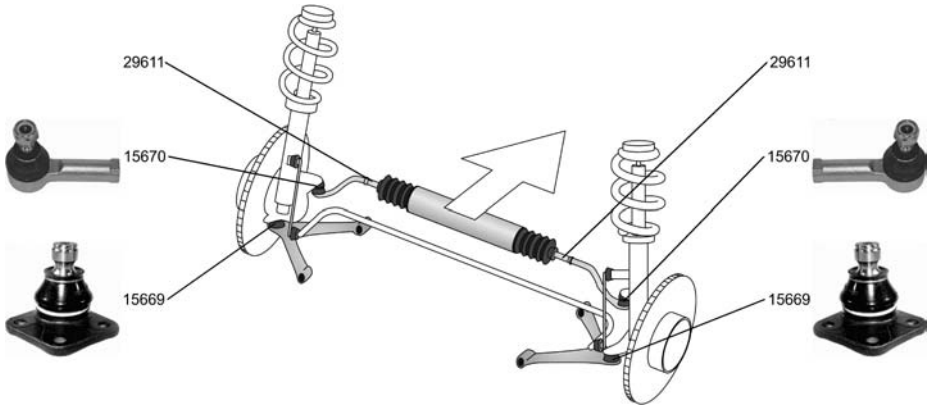

Spurstangenkopf / Tie-rod End Innengewinde [mm] / Inner Thread [mm]:M12x1 Gewindeart: mit Rechtsgewinde / Thread Type: with right-hand thread ALL TYPES		**15670** **6U0 422 811**
Axialgelenk, Spurstange / Axial Rod, tie rod Aussengewinde [mm] / Outer Thread [mm]:M12x1 ALL TYPES		**29611** **6U0 422 807**
Trag-/Führungsgelenk / Support-/ Steering Link mit Zubehör / With accessories ALL TYPES		**15669**

EOS 03.06 -

Spurstangenkopf / Tie-rod End mit Zubehör / With accessories ALL TYPES		**25325** **1K0 423 811 E**
Spurstangenkopf / Tie-rod End mit Zubehör / With accessories ALL TYPES		**25326** **1K0 423 812 E**
Axialgelenk, Spurstange / Axial Rod, tie rod Betriebsart: elektrisch / Operating Mode: Electric ALL TYPES		**25329** **1K0 423 810 A**

VOLKSWAGEN

EOS 03.06 -

Trag-/Führungsgelenk / Support-/ Steering Link ALL TYPES		26772	1K0 407 365 C
Trag-/Führungsgelenk / Support-/ Steering Link ALL TYPES		26773	1K0 407 366 C
Lagerung, Lenker / Mounting, wishbone ALL TYPES		29916	1K0 407 182
Stange/Strebe, Stabilisator / Rod/Strut, stabiliser Pendelstange / Suspension Rod ALL TYPES		26774	1K0 411 315 D
Lagerung, Spurstange / Mounting, track rod ALL TYPES		29314	1K0 501 541 C
Lagerung, Spurstange / Mounting, track rod ALL TYPES		29921	1K0 505 543 A
Lagerung, Lenker / Mounting, wishbone ALL TYPES		29920	1K0 505 541 C
Stange/Strebe, Stabilisator / Rod/Strut, stabiliser Pendelstange / Suspension Rod mit Zubehör / With accessories ALL TYPES		26775	1K0 505 465 K

VOLKSWAGEN

CADDY III Kombi/Estate/Break (2KB) 03.04 -

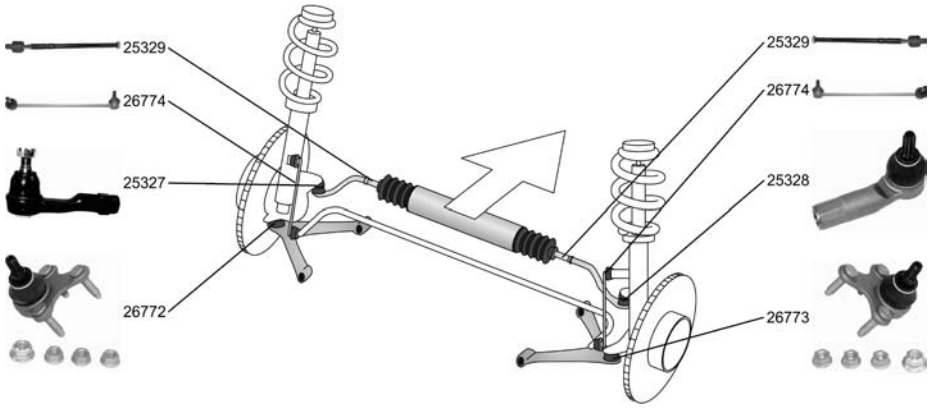

Spurstangenkopf / Tie-rod End 1.4 03.04 - 1.6 04.04 - 1.9 TDI, 77 kW 04.04 - 2.0 SDI 03.04 -		**25327** **1K0 423 811 G**
Spurstangenkopf / Tie-rod End 1.4 03.04 - 1.6 04.04 - 1.9 TDI, 77 kW 04.04 - 2.0 SDI 03.04 -		**25328** **1K0 423 812 G**
Axialgelenk, Spurstange / Axial Rod, tie rod Betriebsart: elektrisch / Operating Mode: Electric 1.4 03.04 - 1.6 04.04 - 1.9 TDI, 77 kW 04.04 - 2.0 SDI 03.04 -		**25329** **1K0 423 810 A**
Trag-/Führungsgelenk / Support-/ Steering Link 1.4 03.04 - 1.6 04.04 - 1.9 TDI, 77 kW 04.04 - 2.0 SDI 03.04 -		**26772** **1K0 407 365 C**
Trag-/Führungsgelenk / Support-/ Steering Link 1.4 03.04 - 1.6 04.04 - 1.9 TDI, 77 kW 04.04 - 2.0 SDI 03.04 -		**26773** **1K0 407 366 C**
Lagerung, Lenker / Mounting, wishbone 1.4 03.04 - 1.6 04.04 - 1.9 TDI, 77 kW 04.04 - 2.0 SDI 03.04 -		**29916** **1K0 407 182**
Stange/Strebe, Stabilisator / Rod/Strut, stabiliser Pendelstange / Suspension Rod 1.4 03.04 - 1.6 04.04 - 1.9 TDI, 77 kW 04.04 - 2.0 SDI 03.04 -		**26774** **1K0 411 315 D**

VOLKSWAGEN

CADDY III Kombi/Estate/Break (2KB) 03.04 -

Stange/Strebe, Stabilisator / Rod/Strut, stabiliser Pendelstange / Suspension Rod ohne Zubehör / without accessories			27872 2K0 505 465 B
1.4	03.04 -		
1.6	04.04 -		
1.9 TDI, 77 kW	04.04 -		
2.0 SDI	03.04 -		

CADDY III Kasten/Box/Furgón/Van (2KA) 03.04 -

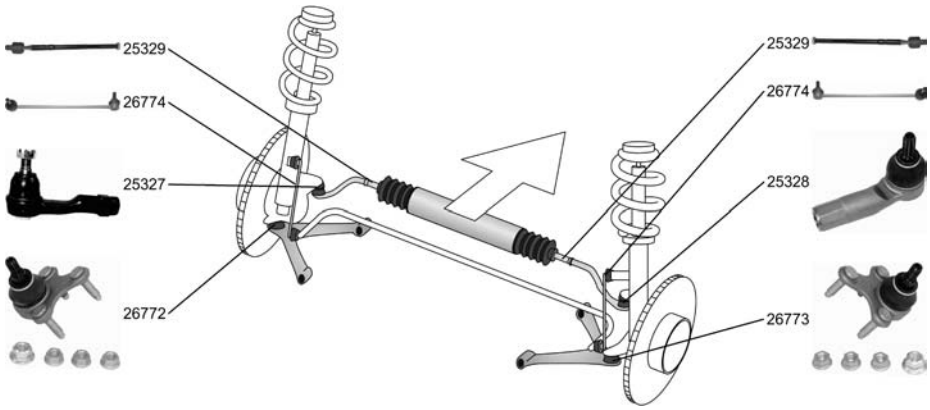

Spurstangenkopf / Tie-rod End ALL TYPES		25327 1K0 423 811 G
Spurstangenkopf / Tie-rod End ALL TYPES		25328 1K0 423 812 G
Axialgelenk, Spurstange / Axial Rod, tie rod Betriebsart: elektrisch / Operating Mode: Electric ALL TYPES		25329 1K0 423 810 A
Trag-/Führungsgelenk / Support-/ Steering Link ALL TYPES		26772 1K0 407 365 C
Trag-/Führungsgelenk / Support-/ Steering Link ALL TYPES		26773 1K0 407 366 C
Lagerung, Lenker / Mounting, wishbone ALL TYPES		29916 1K0 407 182

VOLKSWAGEN

CADDY III Kasten/Box/Furgón/Van (2KA) 03.04 -

Stange/Strebe, Stabilisator / Rod/Strut, stabiliser Pendelstange / Suspension Rod			**26774** **1K0 411 315 D**
1.6	04.04 -		
1.9 TDI	04.04 -		
2.0 SDI	03.04 -		

Stange/Strebe, Stabilisator / Rod/Strut, stabiliser Pendelstange / Suspension Rod ohne Zubehör / without accessories			**27872** **2K0 505 465 B**
ALL TYPES			

CORRADO (53I) 08.87 - 12.95

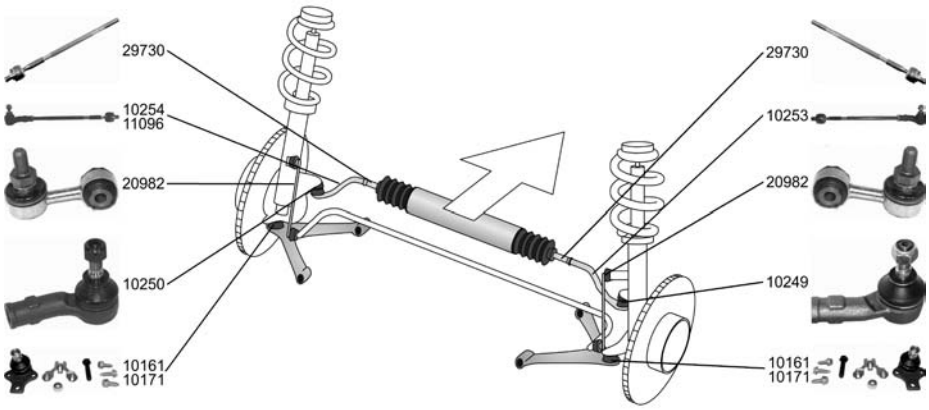

Spurstange / Tie Rod, steering Befestigungsart: hängend / Fastening Type: Suspended für / for:TRW Rohrdurchmesser am Sitz für Faltenbalg 12,7 mm (TRW-Lenkung) / Tube diameter at bellows seating 12,7 mm (TRW-steering)			**10253** **191 422 804 A** 29730 10249
1.8 16V	04.89 - 07.92		
1.8 G60	09.88 - 09.93		
2.0 i	04.93 - 12.95		
2.0 i 16V	08.91 - 12.95		

Spurstange / Tie Rod, steering Befestigungsart: hängend / Fastening Type: Suspended für / for:TRW Rohr-Ø [mm] / Pipe Ø [mm]:14 Achsausführung / Axle Version:TRW Rohrdurchmesser am Sitz für Faltenbalg 12,7 mm (TRW-Lenkung) / Tube diameter at bellows seating 12,7 mm (TRW-steering)			**10254** **191 422 803 A** 29730 10250
1.8 16V	04.89 - 07.92		
1.8 G60	09.88 - 09.93		
2.0 i	04.93 - 12.95		
2.0 i 16V	08.91 - 12.95		

Spurstange / Tie Rod, steering für / for:TRW Konusmaß [mm] / Cone Size [mm]:14 Rohr-Ø [mm] / Pipe Ø [mm]:15 Rohrdurchmesser am Sitz für Faltenbalg 12,7 mm (TRW-Lenkung) / Tube diameter at bellows seating 12,7 mm (TRW-steering)			**11096**
1.8 16V	04.89 - 07.92	Reifenabmessung / Tyre Size:205/50	
1.8 G60	09.88 - 09.93		
2.0 i	04.93 - 12.95		
2.0 i 16V	08.91 - 12.95		
2.9 VR6	08.91 - 12.95		

VOLKSWAGEN

CORRADO (53I) 08.87 - 12.95

Spurstangenkopf / Tie-rod End
Befestigungsart: hängend / Fastening Type: Suspended
Konusmaß [mm] / Cone Size [mm]:14
Innengewinde [mm] / Inner Thread [mm]:M14x1,5
Gewindeart: mit Rechtsgewinde / Thread Type: with right-hand thread
mit Zubehör / With accessories
Gewindemaß / Thread Size:M14x1,5

ALL TYPES

10249 **191 419 812**

Spurstangenkopf / Tie-rod End
Befestigungsart: hängend / Fastening Type: Suspended
Konusmaß [mm] / Cone Size [mm]:14
Innengewinde [mm] / Inner Thread [mm]:M14x1,5
Gewindeart: mit Rechtsgewinde / Thread Type: with right-hand thread
mit Zubehör / With accessories
Gewindemaß / Thread Size:M14x1,5

ALL TYPES

10250 **191 419 811**

Axialgelenk, Spurstange / Axial Rod, tie rod
für / for:TRW

1.8 16V	04.89 - 07.92
1.8 G60	09.88 - 09.93
2.0 i	04.93 - 12.95
2.0 i 16V	08.91 - 12.95

29730 **191 422 807 A**

Lenker, Radaufhängung / Track Control Arm
ohne Trag-/Führungsgelenk / without support/ steering link
mit Gummilager / with rubber mounting
nur in Verbindung mit / Only in connection with:10169/10161

ALL TYPES

10172 **191 407 151 B**
10203
10205

Trag-/Führungsgelenk / Support-/ Steering Link
mit Zubehör / With accessories
für OE / for OE 191 407 151 B

1.8 16V	04.89 - 07.92
1.8 G60	09.88 - 09.93
2.0 i	04.93 - 12.95
2.0 i 16V	08.91 - 12.95

10161 **357 407 365**

Trag-/Führungsgelenk / Support-/ Steering Link
Gewindemaß / Thread Size:M12x1,5
Gewindeart: mit Rechtsgewinde / Thread Type: with right-hand thread

2.9 VR6	08.91 - 12.95

10171 **1H0 407 365**

Lagerung, Lenker / Mounting, wishbone I12/A33

ALL TYPES

10203 **357 407 182**

Lagerung, Lenker / Mounting, wishbone
ohne Montagehülsen / without mounting sleeve

ALL TYPES

10205 **191 407 181 E**

Lagerung, Lenker / Mounting, wishbone
mit Montagehülsen / with mounting sleeve

ALL TYPES

25352 **191 407 181 E**

VOLKSWAGEN

CORRADO (53I) 08.87 - 12.95

Stange/Strebe, Stabilisator / Rod/Strut, stabiliser
Pendelstange / Suspension Rod
mit Zubehör / With accessories

2.9 VR6	08.91 - 12.95

20982 535 411 315

Stabilisatorlager / Mounting, Stabilizer

ALL TYPES	

I17

14341 191 411 314

Lagerung, Stabilisatorkoppelstange
Mounting, stabilizer coupling rod
Pendelstange / Suspension Rod

1.8 16V	04.89 - 07.92
1.8 G60	09.88 - 09.93
2.0 i	04.93 - 12.95
2.0 i 16V	08.91 - 12.95

17400 191 411 327

Faltenbalgsatz, Lenkung / Bellow Kit, steering system

1.8 G60	09.88 - 09.93	Chass. 50-K-000 001->
2.0 i	04.93 - 12.95	
2.0 i 16V	08.91 - 12.95	
2.9 VR6	08.91 - 12.95	
1.8 16V	04.89 - 07.92	

30111 1H0 422 831 B

Achskörperlager / Mounting, axle body

ALL TYPES

10196 191 501 541

Achskörperlager / Mounting, axle body

ALL TYPES

10222 1H0 501 541 A

Achskörperlager / Mounting, axle body
mit Zubehör / With accessories

ALL TYPES

27680 191 501 541

Achskörperlager / Mounting, axle body
mit Zubehör / With accessories

ALL TYPES

27681 1H0 501 541 A

FOX (5Z1) 04.05 -

Spurstange / Tie Rod, steering
für Lenkgetriebe-ID / For steering rack ID:SM-Koyo
für / for:KOYO
elec./hydr.
mit Zubehör / With accessories

ALL TYPES

27645 6Q0 423 803 G
26669
26671

Spurstange / Tie Rod, steering
für Lenkgetriebe-ID / For steering rack ID:SMI-Koyo
für / for:KOYO
elec./hydr.
mit Zubehör / With accessories

ALL TYPES

27646 6Q0 423 804 G
26670
26671

VOLKSWAGEN

FOX (5Z1) 04.05 -

Spurstangenkopf / Tie-rod End
ALL TYPES
26669 6Q0 423 811 C

Spurstangenkopf / Tie-rod End
ALL TYPES
26670 6Q0 423 812 C

Axialgelenk, Spurstange / Axial Rod, tie rod
für Lenkgetriebe-ID / For steering rack ID:SMI-Koyo
für / for:KOYO
elec./hydr.
ALL TYPES
26671 6Q0 423 810 G

Lenker, Radaufhängung / Track Control Arm
mit Gummilager / with rubber mounting
ALL TYPES
28644 6Q0 407 151 E
29709

Trag-/Führungsgelenk / Support-/ Steering Link

1.2	04.05 -	
1.4	04.05 -	
1.4 TDI	04.05 -	

25524 6Q0 407 365 A

Trag-/Führungsgelenk / Support-/ Steering Link

1.2	04.05 -	
1.4	04.05 -	
1.4 TDI	04.05 -	

25525 6Q0 407 366 A

Lagerung, Lenker / Mounting, wishbone
ALL TYPES
29709 6Q0 407 182 A

Lagerung, Lenker / Mounting, wishbone
ALL TYPES
29710 6Q0 407 183 A

Stange/Strebe, Stabilisator / Rod/Strut, stabiliser
Pendelstange / Suspension Rod
1.2 04.05 -
25463 6Q0 411 315 J

Faltenbalgsatz, Lenkung / Bellow Kit, steering system

1.2	04.05 -	
1.4 TDI	04.05 -	
1.4	04.05 -	

30235 6E0 419 831

Achskörperlager / Mounting, axle body
Hydrolager paarweise durch konventionelles Lager ersetzen. / change hydro bearing in pairs by conventional bearing
A71,40
ALL TYPES
21236 1J0 501 541 C

VOLKSWAGEN

GOLF I Cabrio/Convertible (155) 01.79 - 08.93

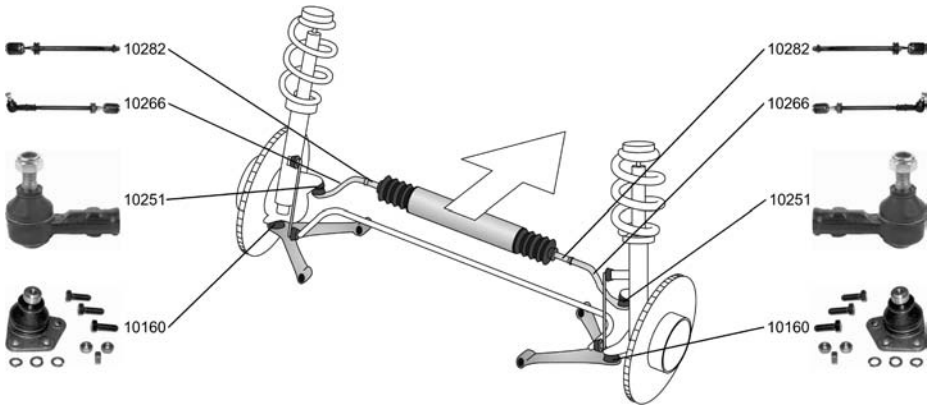

Spurstange / Tie Rod, steering Konusmaß [mm] / Cone Size [mm]:14 Rohr-Ø [mm] / Pipe Ø [mm]:14		**10266**
1.5	01.79 - 11.83	
1.6, 53 kW	04.86 - 02.90	
1.6, 55 kW	08.83 - 04.92	
1.6, 81 kW	08.79 - 07.82	
1.8, 66 kW	08.83 - 09.92	
1.8, 70 kW	08.83 - 04.93	
1.8, 72 kW	08.89 - 03.93	
1.8, 82 kW	08.82 - 12.89	
Spurstangenkopf / Tie-rod End Konusmaß [mm] / Cone Size [mm]:14 Innengewinde [mm] / Inner Thread [mm]:M14x1,5 Gewindeart: mit Rechtsgewinde / Thread Type: with right-hand thread mit Zubehör / With accessories Gewindemaß / Thread Size:M14x1,5		**10251** **171 419 812**
1.5	01.79 - 11.83	
1.6, 53 kW	04.86 - 02.90	
1.6, 55 kW	08.83 - 04.92	
1.6, 81 kW	08.79 - 07.82	
1.8, 66 kW	08.83 - 09.92	
1.8, 70 kW	08.83 - 04.93	
1.8, 72 kW	08.89 - 03.93	
1.8, 82 kW	08.82 - 12.89	
1.5	01.79 - 11.83	
1.6, 53 kW	04.86 - 02.90	
1.6, 55 kW	08.83 - 04.92	
1.6, 81 kW	08.79 - 07.82	
1.8, 66 kW	08.83 - 09.92	
1.8, 70 kW	08.83 - 04.93	
1.8, 72 kW	08.89 - 03.93	
1.8, 82 kW	08.82 - 12.89	
Axialgelenk, Spurstange / Axial Rod, tie rod Gewindemaß / Thread Size:M22x1,5 Gewindeart: mit Rechtsgewinde / Thread Type: with right-hand thread für OE / for OE 025 390 045 617		**10282** **171 419 807 A**
1.5	01.79 - 11.83	
1.6, 53 kW	04.86 - 02.90	
1.6, 55 kW	08.83 - 04.92	
1.6, 81 kW	08.79 - 07.82	
1.8, 66 kW	08.83 - 09.92	
1.8, 70 kW	08.83 - 04.93	
1.8, 72 kW	08.89 - 03.93	
1.8, 82 kW	08.82 - 12.89	
Lenker, Radaufhängung / Track Control Arm ohne Trag-/Führungsgelenk / without support/ steering link ohne Gummilager / without rubber mounting		**10165** **171 407 153 D**
1.5	01.79 - 11.83	
1.6, 53 kW	04.86 - 02.90	
1.6, 55 kW	08.83 - 04.92	
1.6, 81 kW	08.79 - 07.82	
1.8, 66 kW	08.83 - 09.92	
1.8, 70 kW	08.83 - 04.93	
1.8, 72 kW	08.89 - 03.93	
1.8, 82 kW	08.82 - 12.89	

VOLKSWAGEN

GOLF I Cabrio/Convertible (155) 01.79 - 08.93

Trag-/Führungsgelenk / Support-/ Steering Link		A17	**10160** **171 407 365 F**
1.5	01.79 - 11.83		
1.6, 53 kW	04.86 - 02.90		
1.6, 55 kW	08.83 - 04.92		
1.6, 81 kW	08.79 - 07.82		
1.8, 66 kW	08.83 - 09.92		
1.8, 70 kW	08.83 - 04.93		
1.8, 72 kW	08.89 - 03.93		
1.8, 82 kW	08.82 - 12.89		
Lagerung, Lenker / Mounting, wishbone			**10202** **171 407 182 D**
1.5	01.79 - 11.83		
1.6, 53 kW	04.86 - 02.90		
1.6, 55 kW	08.83 - 04.92		
1.6, 81 kW	08.79 - 07.82		
1.8, 66 kW	08.83 - 09.92		
1.8, 70 kW	08.83 - 04.93		
1.8, 72 kW	08.89 - 03.93		
1.8, 82 kW	08.82 - 12.89		
Faltenbalgsatz, Lenkung / Bellow Kit, steering system			**30111** **1H0 422 831 B**
1.5	01.79 - 11.83		
1.6, 81 kW	08.79 - 07.82		
1.8, 72 kW	08.89 - 03.93		
1.6, 53 kW	04.86 - 02.90	->Chass. 1G-K-990 000	
1.8, 82 kW	08.82 - 12.89		
1.6, 55 kW	08.83 - 04.92	Chass. 19-E-300 001 - Chass. 19-G-990 000	
1.8, 66 kW	08.83 - 09.92	Chass. 19-E-300 001 - Chass. 1G-K-990 000	
1.8, 70 kW	08.83 - 04.93		
Faltenbalgsatz, Lenkung / Bellow Kit, steering system			**30117** **171 419 832 C/S**
1.5	01.79 - 11.83		
1.6, 53 kW	04.86 - 02.90		
1.6, 55 kW	08.83 - 04.92		
1.6, 81 kW	08.79 - 07.82		
1.8, 66 kW	08.83 - 09.92		
1.8, 70 kW	08.83 - 04.93		
1.8, 72 kW	08.89 - 03.93		
1.8, 82 kW	08.82 - 12.89		

VOLKSWAGEN

GOLF II (19E, 1G1) 08.83 - 12.92

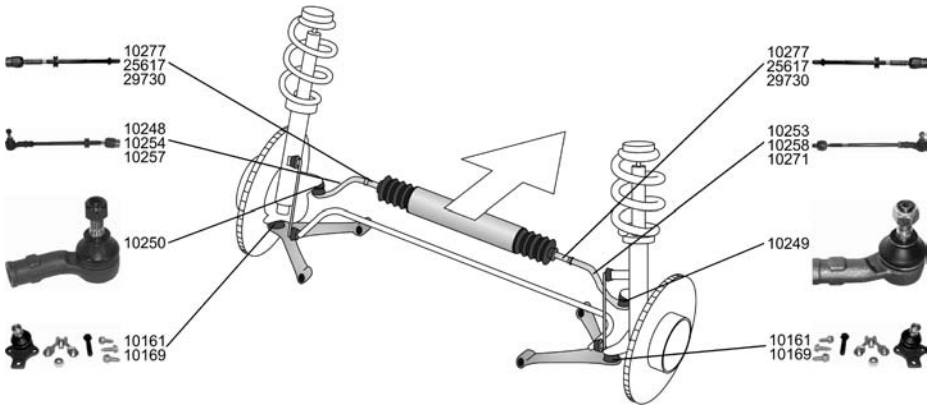

Spurstange / Tie Rod, steering mit Zubehör / With accessories		**10248** **191 419 803** 10250
1.0	11.83 - 10.91	
1.3	08.83 - 12.87	
1.3 KAT	06.86 - 12.92	
1.6	08.83 - 12.92	
1.8	08.84 - 10.91	
1.8 i KAT	08.87 - 10.91	
1.8 Syncro	02.86 - 07.91	
1.8 i Syncro KAT	08.87 - 10.91	
1.8 GTI, 79 kW	08.85 - 10.87	
1.8 GTI KAT	01.87 - 10.91	
1.8 GTI, 82 kW	08.83 - 10.91	
1.8 GTI 16V	02.86 - 10.91	
1.8 GTI G60	04.90 - 07.91	
1.8 GTI G60 Syncro	08.88 - 07.91	
1.6 D	08.83 - 10.91	
1.6 TD	08.83 - 10.91	
Spurstange / Tie Rod, steering Befestigungsart: hängend / Fastening Type: Suspended für / for:TRW Rohrdurchmesser am Sitz für Faltenbalg 12,7 mm (TRW-Lenkung) / Tube diameter at bellows seating 12,7 mm (TRW-steering)		**10253** **191 422 804 A** 29730 10249
1.0	11.83 - 10.91	
1.3	08.83 - 12.87	
1.3 KAT	06.86 - 12.92	
1.6	08.83 - 12.92	
1.8	08.84 - 10.91	
1.8 i KAT	08.87 - 10.91	
1.8 Syncro	02.86 - 07.91	
1.8 i Syncro KAT	08.87 - 10.91	
1.8 GTI, 79 kW	08.85 - 10.87	
1.8 GTI KAT	01.87 - 10.91	
1.8 GTI, 82 kW	08.83 - 10.91	
1.8 GTI 16V	02.86 - 10.91	
1.8 GTI G60	04.90 - 07.91	
1.6 D	08.83 - 10.91	
1.6 TD	08.83 - 10.91	

VOLKSWAGEN

GOLF II (19E, 1G1) 08.83 - 12.92

Spurstange / Tie Rod, steering
Befestigungsart: hängend / Fastening Type: Suspended
für / for:TRW
Rohr-Ø [mm] / Pipe Ø [mm]:14
Achsausführung / Axle Version:TRW
Rohrdurchmesser am Sitz für Faltenbalg 12,7 mm (TRW-Lenkung) / Tube diameter at bellows seating 12,7 mm (TRW-steering)

10254 **191 422 803 A**
29730
10250

1.0	11.83 - 10.91
1.3	08.83 - 12.87
1.3 KAT	06.86 - 12.92
1.6	08.83 - 12.92
1.8	08.84 - 10.91
1.8 i KAT	08.87 - 10.91
1.8 Syncro	02.86 - 07.91
1.8 i Syncro KAT	08.87 - 10.91
1.8 GTI, 79 kW	08.85 - 10.87
1.8 GTI KAT	01.87 - 10.91
1.8 GTI, 82 kW	08.83 - 10.91
1.8 GTI 16V	02.86 - 10.91
1.8 GTI G60	04.90 - 07.91
1.6 D	08.83 - 10.91
1.6 TD	08.83 - 10.91

Spurstange / Tie Rod, steering
Konusmaß [mm] / Cone Size [mm]:14
nur in Verbindung mit / Only in connection with:299 000 029 617
Rohr-Ø [mm] / Pipe Ø [mm]:15
Rohrdurchmesser am Sitz für Faltenbalg 12,7 mm (TRW-Lenkung) / Tube diameter at bellows seating 12,7 mm (TRW-steering)

10257 **1H0 422 803**

1.8 GTI G60 Syncro	08.88 - 07.91

Spurstange / Tie Rod, steering
Rohrdurchmesser am Sitz für Faltenbalg 12,7 mm (TRW-Lenkung) / Tube diameter at bellows seating 12,7 mm (TRW-steering)

10258 **1H0 422 804**

1.8 GTI G60 Syncro	08.88 - 07.91

Spurstange / Tie Rod, steering
mit Zubehör / With accessories

10271 **191 419 804**
10249

1.0	11.83 - 10.91
1.3	08.83 - 12.87
1.3 KAT	06.86 - 12.92
1.6	08.83 - 12.92
1.8	08.84 - 10.91
1.8 i KAT	08.87 - 10.91
1.8 Syncro	02.86 - 07.91
1.8 i Syncro KAT	08.87 - 10.91
1.8 GTI, 79 kW	08.85 - 10.87
1.8 GTI KAT	01.87 - 10.91
1.8 GTI, 82 kW	08.83 - 10.91
1.8 GTI 16V	02.86 - 10.91
1.8 GTI G60	04.90 - 07.91
1.8 GTI G60 Syncro	08.88 - 07.91
1.6 D	08.83 - 10.91
1.6 TD	08.83 - 10.91

Spurstangenkopf / Tie-rod End
Befestigungsart: hängend / Fastening Type: Suspended
Konusmaß [mm] / Cone Size [mm]:14
Innengewinde [mm] / Inner Thread [mm]:M14x1,5
Gewindeart: mit Rechtsgewinde / Thread Type: with right-hand thread
mit Zubehör / With accessories
Gewindemaß / Thread Size:M14x1,5

10249 **191 419 812**

1.0	11.83 - 10.91
1.3	08.83 - 12.87
1.3 KAT	06.86 - 12.92
1.6	08.83 - 12.92
1.8	08.84 - 10.91
1.8 i KAT	08.87 - 10.91
1.8 Syncro	02.86 - 07.91
1.8 i Syncro KAT	08.87 - 10.91
1.8 GTI, 79 kW	08.85 - 10.87
1.8 GTI KAT	01.87 - 10.91
1.8 GTI, 82 kW	08.83 - 10.91
1.8 GTI 16V	02.86 - 10.91
1.8 GTI G60	04.90 - 07.91
1.8 GTI G60 Syncro	08.88 - 07.91
1.6 D	08.83 - 10.91
1.6 TD	08.83 - 10.91

VOLKSWAGEN

GOLF II (19E, 1G1) 08.83 - 12.92

Spurstangenkopf / Tie-rod End
Befestigungsart: hängend / Fastening Type: Suspended
Konusmaß [mm] / Cone Size [mm]:14
Innengewinde [mm] / Inner Thread [mm]:M14x1,5
Gewindeart: mit Rechtsgewinde / Thread Type: with right-hand thread
mit Zubehör / With accessories
Gewindemaß / Thread Size:M14x1,5

10250 **191 419 811**

1.0	11.83 - 10.91
1.3	08.83 - 12.87
1.3 KAT	06.86 - 12.92
1.6	08.83 - 12.92
1.8	08.84 - 10.91
1.8 i KAT	08.87 - 10.91
1.8 Syncro	02.86 - 07.91
1.8 i Syncro KAT	08.87 - 10.91
1.8 GTI, 79 kW	08.85 - 10.87
1.8 GTI KAT	01.87 - 10.91
1.8 GTI, 82 kW	08.83 - 10.91
1.8 GTI 16V	02.86 - 10.91
1.8 GTI G60	04.90 - 07.91
1.8 GTI G60 Syncro	08.88 - 07.91
1.6 D	08.83 - 10.91
1.6 TD	08.83 - 10.91

Axialgelenk, Spurstange / Axial Rod, tie rod
für / for:ZF
Gewindemaß / Thread Size:M22x1,5
Gewindeart: mit Rechtsgewinde / Thread Type: with right-hand thread
für OE / for OE 025 390 049 617 LH
Achsausführung / Axle Version:ZF

10277 **191 419 807 A**

1.0	11.83 - 10.91
1.3	08.83 - 12.87
1.3 KAT	06.86 - 12.92
1.6	08.83 - 12.92
1.8	08.84 - 10.91
1.8 i KAT	08.87 - 10.91
1.8 Syncro	02.86 - 07.91
1.8 i Syncro KAT	08.87 - 10.91
1.8 GTI, 79 kW	08.85 - 10.87
1.8 GTI KAT	01.87 - 10.91
1.8 GTI, 82 kW	08.83 - 10.91
1.8 GTI 16V	02.86 - 10.91
1.8 GTI G60	04.90 - 07.91
1.8 GTI G60 Syncro	08.88 - 07.91
1.6 D	08.83 - 10.91
1.6 TD	08.83 - 10.91

Axialgelenk, Spurstange / Axial Rod, tie rod
Rohrdurchmesser am Sitz für Faltenbalg 15 mm (ZF-Lenkung) / Tube diameter at bellows seating 15 mm (ZF-steering)

25617 **357 422 807 C**

1.0, 37 kW	08.85 - 10.91
1.3, 37 kW	08.85 - 12.87
1.3 KAT	06.86 - 12.92
1.6, 51 kW	10.86 - 12.92
1.6, 53 kW	02.86 - 10.91
1.8	08.84 - 10.91
1.8 i KAT	08.87 - 10.91
1.8 GTI KAT	01.87 - 10.91
1.8 GTI, 82 kW	08.83 - 10.91
1.8 GTI 16V	02.86 - 10.91
1.8 GTI G60	04.90 - 07.91
1.6 D	08.83 - 10.91
1.6 TD	08.83 - 10.91

VOLKSWAGEN

GOLF II (19E, 1G1) 08.83 - 12.92

Axialgelenk, Spurstange / Axial Rod, tie rod
für / for:TRW

29730 191 422 807 A

1.0	11.83 - 10.91	
1.3	08.83 - 12.87	
1.3 KAT	06.86 - 12.92	
1.6	08.83 - 12.92	
1.8	08.84 - 10.91	
1.8 i KAT	08.87 - 10.91	
1.8 Syncro	02.86 - 07.91	
1.8 i Syncro KAT	08.87 - 10.91	
1.8 GTI, 79 kW	08.85 - 10.87	
1.8 GTI KAT	01.87 - 10.91	
1.8 GTI, 82 kW	08.83 - 10.91	
1.8 GTI 16V	02.86 - 10.91	
1.8 GTI G60	04.90 - 07.91	
1.6 D	08.83 - 10.91	
1.6 TD	08.83 - 10.91	

Lenker, Radaufhängung / Track Control Arm
ohne Trag-/Führungsgelenk / without support/ steering link
mit Gummilager / with rubber mounting
nur in Verbindung mit / Only in connection with:10169/10161

10172 191 407 151 B
10203
10205

1.0	11.83 - 10.91	
1.3	08.83 - 12.87	
1.3 KAT	06.86 - 12.92	
1.6	08.83 - 12.92	
1.8	08.84 - 10.91	
1.8 i KAT	08.87 - 10.91	
1.8 Syncro	02.86 - 07.91	
1.8 i Syncro KAT	08.87 - 10.91	
1.8 GTI, 79 kW	08.85 - 10.87	
1.8 GTI KAT	01.87 - 10.91	
1.8 GTI, 82 kW	08.83 - 10.91	
1.8 GTI 16V	02.86 - 10.91	
1.8 GTI G60	04.90 - 07.91	
1.8 GTI G60 Syncro	08.88 - 07.91	
1.6 D	08.83 - 10.91	
1.6 TD	08.83 - 10.91	

Trag-/Führungsgelenk / Support-/ Steering Link
mit Zubehör / With accessories
für OE / for OE 191 407 151 B

10161 357 407 365

1.0, 37 kW	08.85 - 10.91	08.1987->
1.3, 37 kW	08.85 - 12.87	Chass. 19-JW-000001->
1.3 KAT	06.86 - 12.92	
1.6	08.83 - 12.92	
1.8	08.84 - 10.91	
1.8 Syncro, 66 kW	02.86 - 07.91	
1.8 GTI, 79 kW	08.85 - 10.87	
1.8 GTI KAT	01.87 - 10.91	
1.8 GTI, 82 kW	08.83 - 10.91	
1.8 GTI 16V	02.86 - 10.91	
1.6 D	08.83 - 10.91	
1.6 TD, 51 kW	08.83 - 10.91	
1.8 i KAT	08.87 - 10.91	
1.8 i Syncro KAT	08.87 - 10.91	
1.8 Syncro, 72 kW	08.88 - 07.91	
1.8 GTI G60	04.90 - 07.91	
1.8 GTI G60 Syncro	08.88 - 07.91	
1.6 TD, 44 kW	08.89 - 10.91	
1.6 TD, 59 kW	04.89 - 10.91	

Trag-/Führungsgelenk / Support-/ Steering Link
mit Zubehör / With accessories
mit Befestigungsmaterial / with fastening material

A17

10169 191 407 365

1.0, 33 kW	11.83 - 08.85	
1.3, 40 kW	08.83 - 06.87	
1.0, 37 kW	08.85 - 10.91	->07.1987
1.3, 37 kW	08.85 - 12.87	->Chass. 19-HB-990000
1.3 KAT	06.86 - 12.92	
1.6	08.83 - 12.92	
1.8	08.84 - 10.91	
1.8 Syncro, 66 kW	02.86 - 07.91	
1.8 GTI, 79 kW	08.85 - 10.87	
1.8 GTI KAT	01.87 - 10.91	
1.8 GTI, 82 kW	08.83 - 10.91	
1.8 GTI 16V	02.86 - 10.91	
1.6 D	08.83 - 10.91	
1.6 TD, 51 kW	08.83 - 10.91	

VOLKSWAGEN

GOLF II (19E, 1G1) 08.83 - 12.92

Lagerung, Lenker / Mounting, wishbone		I12/A33	**10203**	**357 407 182**
1.0	11.83 - 10.91			
1.3	08.83 - 12.87			
1.3 KAT	06.86 - 12.92			
1.6	08.83 - 12.92			
1.8	08.84 - 10.91			
1.8 i KAT	08.87 - 10.91			
1.8 Syncro	02.86 - 07.91			
1.8 i Syncro KAT	08.87 - 10.91			
1.8 GTI, 79 kW	08.85 - 10.87			
1.8 GTI KAT	01.87 - 10.91			
1.8 GTI, 82 kW	08.83 - 10.91			
1.8 GTI 16V	02.86 - 10.91			
1.8 GTI G60	04.90 - 07.91			
1.8 GTI G60 Syncro	08.88 - 07.91			
1.6 D	08.83 - 10.91			
1.6 TD	08.83 - 10.91			
Lagerung, Lenker / Mounting, wishbone ohne Montagehülsen / without mounting sleeve			**10205**	**191 407 181 E**
1.0	11.83 - 10.91			
1.3	08.83 - 12.87			
1.3 KAT	06.86 - 12.92			
1.6	08.83 - 12.92			
1.8	08.84 - 10.91			
1.8 i KAT	08.87 - 10.91			
1.8 Syncro	02.86 - 07.91			
1.8 i Syncro KAT	08.87 - 10.91			
1.8 GTI, 79 kW	08.85 - 10.87			
1.8 GTI KAT	01.87 - 10.91			
1.8 GTI, 82 kW	08.83 - 10.91			
1.8 GTI 16V	02.86 - 10.91			
1.8 GTI G60	04.90 - 07.91			
1.8 GTI G60 Syncro	08.88 - 07.91			
1.6 D	08.83 - 10.91			
1.6 TD	08.83 - 10.91			
Lagerung, Lenker / Mounting, wishbone mit Montagehülsen / with mounting sleeve			**25352**	**191 407 181 E**
1.0	11.83 - 10.91			
1.3	08.83 - 12.87			
1.3 KAT	06.86 - 12.92			
1.6	08.83 - 12.92			
1.8	08.84 - 10.91			
1.8 i KAT	08.87 - 10.91			
1.8 Syncro	02.86 - 07.91			
1.8 i Syncro KAT	08.87 - 10.91			
1.8 GTI, 79 kW	08.85 - 10.87			
1.8 GTI KAT	01.87 - 10.91			
1.8 GTI, 82 kW	08.83 - 10.91			
1.8 GTI 16V	02.86 - 10.91			
1.8 GTI G60	04.90 - 07.91			
1.8 GTI G60 Syncro	08.88 - 07.91			
1.6 D	08.83 - 10.91			
1.6 TD	08.83 - 10.91			
Stabilisatorlager / Mounting, Stabilizer		I17	**14341**	**191 411 314**
1.0	11.83 - 10.91			
1.3	08.83 - 12.87			
1.3 KAT	06.86 - 12.92			
1.6	08.83 - 12.92			
1.8	08.84 - 10.91			
1.8 i KAT	08.87 - 10.91			
1.8 Syncro	02.86 - 07.91			
1.8 i Syncro KAT	08.87 - 10.91			
1.8 GTI, 79 kW	08.85 - 10.87			
1.8 GTI KAT	01.87 - 10.91			
1.8 GTI, 82 kW	08.83 - 10.91			
1.8 GTI 16V	02.86 - 10.91			
1.8 GTI G60	04.90 - 07.91			
1.8 GTI G60 Syncro	08.88 - 07.91			
1.6 D	08.83 - 10.91			
1.6 TD	08.83 - 10.91			

VOLKSWAGEN

GOLF II (19E, 1G1) 08.83 - 12.92

Stabilisatorlager / Mounting, Stabilizer		I19	**27461** **1H0 411 314**
1.3, 40 kW	08.83 - 06.87	Mot. HK - Durchmesser Stabilisator [mm] / Stabilizer Diameter [mm]:21,5	
1.0	11.83 - 10.91	Durchmesser Stabilisator [mm] / Stabilizer Diameter [mm]:21,5	
1.6, 51 kW	10.86 - 12.92		
1.6, 53 kW	02.86 - 10.91		
1.8, 62 kW	08.86 - 01.90		
1.8 i KAT	08.87 - 10.91		
1.8 Syncro, 72 kW	08.88 - 07.91		
1.8 GTI, 79 kW	08.85 - 10.87		
1.8 GTI KAT	01.87 - 10.91		
1.8 GTI 16V	02.86 - 10.91		
1.8 GTI G60	04.90 - 07.91		
1.6 TD, 44 kW	08.89 - 10.91		
1.6, 55 kW	08.83 - 07.92	Mot. EZ Durchmesser Stabilisator [mm] / Stabilizer Diameter [mm]:21,5	
1.8 GTI G60 Syncro	08.88 - 07.91	Mot. 1H Durchmesser Stabilisator [mm] / Stabilizer Diameter [mm]:21,5	
1.8, 66 kW	08.84 - 10.91	Mot. GX Durchmesser Stabilisator [mm] / Stabilizer Diameter [mm]:21,5	
1.8 Syncro, 66 kW	02.86 - 07.91		
1.8 GTI, 82 kW	08.83 - 10.91	Mot. PB Durchmesser Stabilisator [mm] / Stabilizer Diameter [mm]:21,5	
1.6 D, 40 kW	08.83 - 10.91	Mot. JP Durchmesser Stabilisator [mm] / Stabilizer Diameter [mm]:21,5	
1.6 TD, 51 kW	08.83 - 10.91	Mot. JR Durchmesser Stabilisator [mm] / Stabilizer Diameter [mm]:21,5	
1.6 TD, 59 kW	04.89 - 10.91	Mot. SB Durchmesser Stabilisator [mm] / Stabilizer Diameter [mm]:21,5	
1.3 KAT	06.86 - 12.92	Mot. NZ Durchmesser Stabilisator [mm] / Stabilizer Diameter [mm]:21,5	
Lagerung, Stabilisatorkoppelstange **Mounting, stabilizer coupling rod** Pendelstange / Suspension Rod			**17400** **191 411 327**
1.0	11.83 - 10.91		
1.3	08.83 - 12.87		
1.3 KAT	06.86 - 12.92		
1.6	08.83 - 12.92		
1.8	08.84 - 10.91		
1.8 i KAT	08.87 - 10.91		
1.8 Syncro	02.86 - 07.91		
1.8 i Syncro KAT	08.87 - 10.91		
1.8 GTI, 79 kW	08.85 - 10.87		
1.8 GTI KAT	01.87 - 10.91		
1.8 GTI, 82 kW	08.83 - 10.91		
1.8 GTI 16V	02.86 - 10.91		
1.8 GTI G60	04.90 - 07.91		
1.8 GTI G60 Syncro	08.88 - 07.91		
1.6 D	08.83 - 10.91		
1.6 TD	08.83 - 10.91		

VOLKSWAGEN

GOLF II (19E, 1G1) 08.83 - 12.92

Faltenbalgsatz, Lenkung / Bellow Kit, steering system

30111 — 1H0 422 831 B

1.3, 40 kW	08.83 - 06.87	Chass. 19-E-300 001 - Chass. 1G-K-990 000
1.6, 55 kW	08.83 - 07.92	
1.8 i KAT	08.87 - 10.91	
1.6 D, 40 kW	08.83 - 10.91	
1.6 TD, 51 kW	08.83 - 10.91	
1.6, 51 kW	10.86 - 12.92	->Chass. 1G-K-990 000
1.6, 53 kW	02.86 - 10.91	
1.8, 62 kW	08.86 - 01.90	
1.8 Syncro, 66 kW	02.86 - 07.91	
1.8 GTI KAT	01.87 - 10.91	
1.8 GTI, 82 kW	08.83 - 10.91	
1.8 GTI 16V	02.86 - 10.91	
1.0	11.83 - 10.91	
1.3, 37 kW	08.85 - 12.87	
1.3 KAT	06.86 - 12.92	
1.3, 44 kW	08.83 - 10.86	
1.8, 66 kW	08.84 - 10.91	
1.8 i Syncro KAT	08.87 - 10.91	
1.8 Syncro, 72 kW	08.88 - 07.91	
1.8 GTI, 79 kW	08.85 - 10.87	
1.8 GTI G60	04.90 - 07.91	
1.8 GTI G60 Syncro	08.88 - 07.91	
1.6 D, 37 kW	08.83 - 10.91	
1.6 TD, 44 kW	08.89 - 10.91	
1.6 TD, 59 kW	04.89 - 10.91	

Faltenbalgsatz, Lenkung / Bellow Kit, steering system

30126 — 357 422 831 B

1.0, 37 kW	08.85 - 10.91	Chass. 1G-L-000001->
1.3, 37 kW	08.85 - 12.87	
1.3 KAT	06.86 - 12.92	
1.6, 51 kW	10.86 - 12.92	
1.6, 53 kW	02.86 - 10.91	
1.8	08.84 - 10.91	
1.8 i KAT	08.87 - 10.91	
1.8 GTI KAT	01.87 - 10.91	
1.8 GTI, 82 kW	08.83 - 10.91	
1.8 GTI 16V	02.86 - 10.91	
1.6 D	08.83 - 10.91	
1.6 TD, 51 kW	08.83 - 10.91	
1.6 TD, 59 kW	04.89 - 10.91	
1.8 GTI G60	04.90 - 07.91	
1.6 TD, 44 kW	08.89 - 10.91	

Achskörperlager / Mounting, axle body

10196 — 191 501 541

1.0	11.83 - 10.91	
1.3, 40 kW	08.83 - 06.87	
1.3 KAT	06.86 - 12.92	
1.6	08.83 - 12.92	
1.8	08.84 - 10.91	
1.8 i KAT	08.87 - 10.91	
1.8 GTI, 79 kW	08.85 - 10.87	
1.8 GTI KAT	01.87 - 10.91	
1.8 GTI, 82 kW	08.83 - 10.91	
1.8 GTI 16V	02.86 - 10.91	
1.8 GTI G60	04.90 - 07.91	
1.6 D, 40 kW	08.83 - 10.91	
1.6 TD	08.83 - 10.91	

Achskörperlager / Mounting, axle body
mit Zubehör / With accessories

27680 — 191 501 541

1.0	11.83 - 10.91	
1.3, 40 kW	08.83 - 06.87	
1.3 KAT	06.86 - 12.92	
1.6	08.83 - 12.92	
1.8	08.84 - 10.91	
1.8 i KAT	08.87 - 10.91	
1.8 GTI, 79 kW	08.85 - 10.87	
1.8 GTI KAT	01.87 - 10.91	
1.8 GTI, 82 kW	08.83 - 10.91	
1.8 GTI 16V	02.86 - 10.91	
1.8 GTI G60	04.90 - 07.91	
1.6 D, 40 kW	08.83 - 10.91	
1.6 TD	08.83 - 10.91	

VOLKSWAGEN

GOLF III (1H1) 08.91 - 08.97

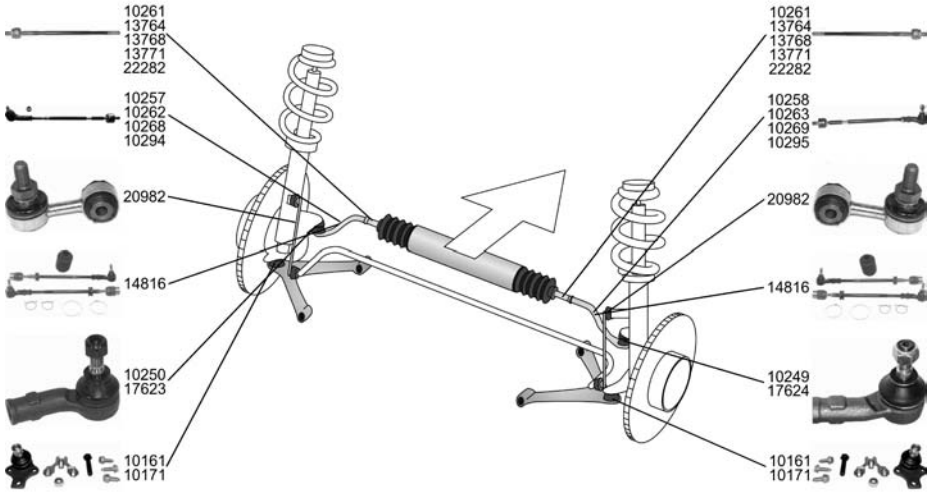

Spurstange / Tie Rod, steering Konusmaß [mm] / Cone Size [mm]:14 nur in Verbindung mit / Only in connection with:299 000 029 617 Rohr-Ø [mm] / Pipe Ø [mm]:15 Rohrdurchmesser am Sitz für Faltenbalg 12,7 mm (TRW-Lenkung) / Tube diameter at bellows seating 12,7 mm (TRW-steering)			**10257** **1H0 422 803**
1.4	10.91 - 08.97	für / for:TRW	
1.6	09.92 - 08.97		
1.8, 55 kW	11.91 - 08.97		
1.8, 66 kW	11.91 - 08.97		
1.8 Syncro (1HX1)	01.93 - 08.97		
2.0 Syncro (1HX1)	08.95 - 08.97		
1.9 D	11.91 - 08.97		
1.9 TD,GTD	11.91 - 08.97		
1.9 TDI	09.93 - 08.97		
1.9 TDI Syncro (1HX1)	08.95 - 08.97		
Citystromer	11.94 - 08.97		
Spurstange / Tie Rod, steering Rohrdurchmesser am Sitz für Faltenbalg 12,7 mm (TRW-Lenkung) / Tube diameter at bellows seating 12,7 mm (TRW-steering)			**10258** **1H0 422 804**
1.4	10.91 - 08.97	für / for:TRW	
1.6	09.92 - 08.97		
1.8, 55 kW	11.91 - 08.97		
1.8, 66 kW	11.91 - 08.97		
1.8 Syncro (1HX1)	01.93 - 08.97		
2.0 Syncro (1HX1)	08.95 - 08.97		
1.9 D	11.91 - 08.97		
1.9 TD,GTD	11.91 - 08.97		
1.9 TDI	09.93 - 08.97		
1.9 TDI Syncro (1HX1)	08.95 - 08.97		
Citystromer	11.94 - 08.97		
Spurstange / Tie Rod, steering Achsausführung / Axle Version:TRW Konusmaß [mm] / Cone Size [mm]:14 nur in Verbindung mit / Only in connection with:299 000 029 617 Rohr-Ø [mm] / Pipe Ø [mm]:15 Rohrdurchmesser am Sitz für Faltenbalg 12,7 mm (TRW-Lenkung) / Tube diameter at bellows seating 12,7 mm (TRW-steering)			**10262** **1H0 422 803 A**
2.0	11.91 - 08.97		
2.0 GTI 16V	08.92 - 08.97		
2.8 VR6	01.92 - 08.97		
2.9 VR6 Syncro (1HX1)	10.94 - 08.97		
Spurstange / Tie Rod, steering Konusmaß [mm] / Cone Size [mm]:14 Rohr-Ø [mm] / Pipe Ø [mm]:15 Rohrdurchmesser am Sitz für Faltenbalg 12,7 mm (TRW-Lenkung) / Tube diameter at bellows seating 12,7 mm (TRW-steering)			**10263** **1H0 422 804 A**
2.0	11.91 - 08.97		
2.0 GTI 16V	08.92 - 08.97		
2.8 VR6	01.92 - 08.97		
2.9 VR6 Syncro (1HX1)	10.94 - 08.97		

VOLKSWAGEN

GOLF III (1H1) 08.91 - 08.97

Spurstange / Tie Rod, steering
Konusmaß [mm] / Cone Size [mm]:14
Rohr-Ø [mm] / Pipe Ø [mm]:13
nur in Verbindung mit / Only in connection with:299 217 163 617
für / for:ZF
Rohrdurchmesser am Sitz für Faltenbalg 15 mm (ZF-Lenkung) / Tube diameter at bellows seating 15 mm (ZF-steering)

10268 **1H0 422 803 B**
10250

1.4	10.91 - 08.97
1.6	09.92 - 08.97
1.8, 55 kW	11.91 - 08.97
1.8, 66 kW	11.91 - 08.97
2.0	11.91 - 08.97
2.0 GTI 16V	08.92 - 08.97
2.8 VR6	01.92 - 08.97
1.9 D	11.91 - 08.97
1.9 TD,GTD	11.91 - 08.97
1.9 TDI	09.93 - 08.97
Citystromer	11.94 - 08.97

Spurstange / Tie Rod, steering
für / for:ZF
Konusmaß [mm] / Cone Size [mm]:14
Rohr-Ø [mm] / Pipe Ø [mm]:13
Rohrdurchmesser am Sitz für Faltenbalg 15 mm (ZF-Lenkung) / Tube diameter at bellows seating 15 mm (ZF-steering)

10269 **1H0 422 804 B**
10249

1.4	10.91 - 08.97
1.6	09.92 - 08.97
1.8, 55 kW	11.91 - 08.97
1.8, 66 kW	11.91 - 08.97
2.0	11.91 - 08.97
2.0 GTI 16V	08.92 - 08.97
2.8 VR6	01.92 - 08.97
1.9 D	11.91 - 08.97
1.9 TD,GTD	11.91 - 08.97
1.9 TDI	09.93 - 08.97
Citystromer	11.94 - 08.97

Spurstange / Tie Rod, steering
Konusmaß [mm] / Cone Size [mm]:14
Rohr-Ø [mm] / Pipe Ø [mm]:13
mit Zubehör / With accessories

10294 **1H0 419 803**

1.4	10.91 - 08.97
1.6	09.92 - 08.97
1.8, 55 kW	11.91 - 08.97
1.9 D	11.91 - 08.97
1.9 TD,GTD	11.91 - 08.97
Citystromer	11.94 - 08.97

Spurstange / Tie Rod, steering
Konusmaß [mm] / Cone Size [mm]:14
Rohr-Ø [mm] / Pipe Ø [mm]:13
mit Zubehör / With accessories

10295 **1H0 419 804**

1.4	10.91 - 08.97
1.6	09.92 - 08.97
1.8, 55 kW	11.91 - 08.97
1.9 D	11.91 - 08.97
1.9 TD,GTD	11.91 - 08.97
Citystromer	11.94 - 08.97

Reparatursatz, Spurstange / Repair Kit, tie rod

14816 **1H0 498 803/804 Z**
10295
10294

1.4	10.91 - 08.97
1.6	09.92 - 08.97
1.8, 55 kW	11.91 - 08.97
1.9 D	11.91 - 08.97
1.9 TD,GTD	11.91 - 08.97
Citystromer	11.94 - 08.97

VOLKSWAGEN

GOLF III (1H1) 08.91 - 08.97

Spurstangenkopf / Tie-rod End
Befestigungsart: hängend / Fastening Type: Suspended
Konusmaß [mm] / Cone Size [mm]:14
Innengewinde [mm] / Inner Thread [mm]:M14x1,5
Gewindeart: mit Rechtsgewinde / Thread Type: with right-hand thread
mit Zubehör / With accessories
Gewindemaß / Thread Size:M14x1,5

10249 **191 419 812**

1.4	10.91 - 08.97
1.6	09.92 - 08.97
1.8, 55 kW	11.91 - 08.97
1.8, 66 kW	11.91 - 08.97
1.8 Syncro (1HX1)	01.93 - 08.97
2.0	11.91 - 08.97
2.0 Syncro (1HX1)	08.95 - 08.97
2.0 GTI 16V	08.92 - 08.97
2.8 VR6	01.92 - 08.97
2.9 VR6 Syncro (1HX1)	10.94 - 08.97
1.9 D	11.91 - 08.97
1.9 TD,GTD	11.91 - 08.97
1.9 TDI	09.93 - 08.97
1.9 TDI Syncro (1HX1)	08.95 - 08.97
Citystromer	11.94 - 08.97

Spurstangenkopf / Tie-rod End
Befestigungsart: hängend / Fastening Type: Suspended
Konusmaß [mm] / Cone Size [mm]:14
Innengewinde [mm] / Inner Thread [mm]:M14x1,5
Gewindeart: mit Rechtsgewinde / Thread Type: with right-hand thread
mit Zubehör / With accessories
Gewindemaß / Thread Size:M14x1,5

10250 **191 419 811**

1.4	10.91 - 08.97
1.6	09.92 - 08.97
1.8, 55 kW	11.91 - 08.97
1.8, 66 kW	11.91 - 08.97
1.8 Syncro (1HX1)	01.93 - 08.97
2.0	11.91 - 08.97
2.0 Syncro (1HX1)	08.95 - 08.97
2.0 GTI 16V	08.92 - 08.97
2.8 VR6	01.92 - 08.97
2.9 VR6 Syncro (1HX1)	10.94 - 08.97
1.9 D	11.91 - 08.97
1.9 TD,GTD	11.91 - 08.97
1.9 TDI	09.93 - 08.97
1.9 TDI Syncro (1HX1)	08.95 - 08.97
Citystromer	11.94 - 08.97

Spurstangenkopf / Tie-rod End
Innengewinde [mm] / Inner Thread [mm]:M14x1,5
Gewindeart: mit Rechtsgewinde / Thread Type: with right-hand thread
mit Zubehör / With accessories

17623 **1J0 422 811 A**

1.9 SDI	04.97 - 08.97

Spurstangenkopf / Tie-rod End
Innengewinde [mm] / Inner Thread [mm]:M14x1,5
Gewindeart: mit Rechtsgewinde / Thread Type: with right-hand thread
mit Zubehör / With accessories

17624 **1J0 422 812 A**

1.9 SDI	04.97 - 08.97

Axialgelenk, Spurstange / Axial Rod, tie rod
für Lenkgetriebe-ID / For steering rack ID:TRW
ohne Zubehör / without accessories

10261 **1H0 422 807 D**

1.4	10.91 - 08.97
1.6	09.92 - 08.97
1.8, 55 kW	11.91 - 08.97
1.8, 66 kW	11.91 - 08.97
1.8 Syncro (1HX1)	01.93 - 08.97
2.0 Syncro (1HX1)	08.95 - 08.97
1.9 SDI	04.97 - 08.97
1.9 D	11.91 - 08.97
1.9 TD,GTD	11.91 - 08.97
1.9 TDI	09.93 - 08.97
1.9 TDI Syncro (1HX1)	08.95 - 08.97

VOLKSWAGEN

GOLF III (1H1) 08.91 - 08.97

Axialgelenk, Spurstange / Axial Rod, tie rod Gewindemaß / Thread Size:M22x1,5 Gewindeart: mit Rechtsgewinde / Thread Type: with right-hand thread			**13764** **1H0 419 807**
1.4	10.91 - 08.97		
1.6	09.92 - 08.97		
1.8, 55 kW	11.91 - 08.97		
1.9 D	11.91 - 08.97		
1.9 TD,GTD	11.91 - 08.97		
Citystromer	11.94 - 08.97		
Axialgelenk, Spurstange / Axial Rod, tie rod für OE / for OE 025 390 111 617 LH für / for:ZF Rohrdurchmesser am Sitz für Faltenbalg 15 mm (ZF-Lenkung) / Tube diameter at bellows seating 15 mm (ZF-steering)			**13768**
1.4	10.91 - 08.97	Rohrdurchmesser am Sitz für Faltenbalg 15 mm (ZF-Lenkung) / Tube diameter at bellows seating 15 mm (ZF-steering)	
1.6	09.92 - 08.97		
1.8, 55 kW	11.91 - 08.97		
1.8, 66 kW	11.91 - 08.97		
2.0	11.91 - 08.97		
2.0 GTI 16V	08.92 - 08.97		
2.8 VR6	01.92 - 08.97		
1.9 D	11.91 - 08.97		
1.9 TD,GTD	11.91 - 08.97		
1.9 TDI	09.93 - 08.97		
Citystromer	11.94 - 08.97		
Axialgelenk, Spurstange / Axial Rod, tie rod Achsausführung / Axle Version:TRW			**13771** **1H0 422 807 A**
2.0	11.91 - 08.97		
2.0 GTI 16V	08.92 - 08.97		
2.8 VR6	01.92 - 08.97		
2.9 VR6 Syncro (1HX1)	10.94 - 08.97		
Axialgelenk, Spurstange / Axial Rod, tie rod für OE / for OE 025 390 142 617 LH			**22282** **1J0 422 807 A**
1.9 SDI	04.97 - 08.97		
Lenker, Radaufhängung / Track Control Arm ohne Trag-/Führungsgelenk / without support/ steering link mit Gummilager / with rubber mounting nur in Verbindung mit / Only in connection with:10161			**14466** **1H0 407 151** 10205 10203
1.4	10.91 - 08.97		
1.6	09.92 - 08.97		
1.8, 55 kW	11.91 - 08.97		
1.8, 66 kW	11.91 - 08.97		
1.8 Syncro (1HX1)	01.93 - 08.97		
1.9 D	11.91 - 08.97		
1.9 TD,GTD	11.91 - 08.97		
1.9 TDI	09.93 - 08.97		
1.9 TDI Syncro (1HX1)	08.95 - 08.97		
Citystromer	11.94 - 08.97		
Trag-/Führungsgelenk / Support-/ Steering Link mit Zubehör / With accessories für OE / for OE 191 407 151 B			**10161** **357 407 365**
1.4	10.91 - 08.97		
1.6	09.92 - 08.97		
1.8, 55 kW	11.91 - 08.97		
1.8, 66 kW	11.91 - 08.97		
1.8 Syncro (1HX1)	01.93 - 08.97		
2.0 Syncro (1HX1)	08.95 - 08.97		
1.9 D	11.91 - 08.97		
1.9 TD,GTD	11.91 - 08.97		
1.9 TDI	09.93 - 08.97		
1.9 TDI Syncro (1HX1)	08.95 - 08.97		
Citystromer	11.94 - 08.97		
2.0	11.91 - 08.97	Mot. 2E Mot. ADY A ---------- Mot. AGG Mot. AKR für / for:CL/GL/GT	

VOLKSWAGEN

GOLF III (1H1) 08.91 - 08.97

Trag-/Führungsgelenk / Support-/ Steering Link Gewindemaß / Thread Size:M12x1,5 Gewindeart: mit Rechtsgewinde / Thread Type: with right-hand thread			**10171** **1H0 407 365**
2.0	11.91 - 08.97	Mot. 2E Mot. ADY M ---------- Mot. AGG Mot. AKR für / for:GTI	
2.0 GTI 16V	08.92 - 08.97		
2.8 VR6	01.92 - 08.97		
2.9 VR6 Syncro (1HX1)	10.94 - 08.97		
Lagerung, Lenker / Mounting, wishbone		I12/A33	**10203** **357 407 182**
1.4	10.91 - 08.97		
1.6	09.92 - 08.97		
1.8, 55 kW	11.91 - 08.97		
1.8, 66 kW	11.91 - 08.97		
1.8 Syncro (1HX1)	01.93 - 08.97		
2.0	11.91 - 08.97		
2.0 Syncro (1HX1)	08.95 - 08.97		
2.0 GTI 16V	08.92 - 08.97		
2.8 VR6	01.92 - 08.97		
2.9 VR6 Syncro (1HX1)	10.94 - 08.97		
1.9 SDI	04.97 - 08.97		
1.9 D	11.91 - 08.97		
1.9 TD,GTD	11.91 - 08.97		
1.9 TDI	09.93 - 08.97		
1.9 TDI Syncro (1HX1)	08.95 - 08.97		
Citystromer	11.94 - 08.97		
Lagerung, Lenker / Mounting, wishbone ohne Montagehülsen / without mounting sleeve			**10205** **191 407 181 E**
1.4	10.91 - 08.97		
1.6	09.92 - 08.97		
1.8, 55 kW	11.91 - 08.97		
1.8, 66 kW	11.91 - 08.97		
1.8 Syncro (1HX1)	01.93 - 08.97		
2.0	11.91 - 08.97		
2.0 Syncro (1HX1)	08.95 - 08.97		
2.0 GTI 16V	08.92 - 08.97		
2.8 VR6	01.92 - 08.97		
2.9 VR6 Syncro (1HX1)	10.94 - 08.97		
1.9 SDI	04.97 - 08.97		
1.9 D	11.91 - 08.97		
1.9 TD,GTD	11.91 - 08.97		
1.9 TDI	09.93 - 08.97		
1.9 TDI Syncro (1HX1)	08.95 - 08.97		
Citystromer	11.94 - 08.97		
Lagerung, Lenker / Mounting, wishbone mit Montagehülsen / with mounting sleeve			**25352** **191 407 181 E**
1.4	10.91 - 08.97		
1.6	09.92 - 08.97		
1.8, 55 kW	11.91 - 08.97		
1.8, 66 kW	11.91 - 08.97		
1.8 Syncro (1HX1)	01.93 - 08.97		
2.0	11.91 - 08.97		
2.0 Syncro (1HX1)	08.95 - 08.97		
2.0 GTI 16V	08.92 - 08.97		
2.8 VR6	01.92 - 08.97		
2.9 VR6 Syncro (1HX1)	10.94 - 08.97		
1.9 SDI	04.97 - 08.97		
1.9 D	11.91 - 08.97		
1.9 TD,GTD	11.91 - 08.97		
1.9 TDI	09.93 - 08.97		
1.9 TDI Syncro (1HX1)	08.95 - 08.97		
Citystromer	11.94 - 08.97		
Stange/Strebe, Stabilisator / Rod/Strut, stabiliser Pendelstange / Suspension Rod mit Zubehör / With accessories			**20982** **535 411 315**
2.0	11.91 - 08.97	für / for:GTI	
2.0 GTI 16V	08.92 - 08.97		
2.8 VR6	01.92 - 08.97		
2.9 VR6 Syncro (1HX1)	10.94 - 08.97		

VOLKSWAGEN

GOLF III (1H1) 08.91 - 08.97

Stabilisatorlager / Mounting, Stabilizer		I19	**27461** **1H0 411 314**
1.8, 55 kW	11.91 - 08.97	Durchmesser Stabilisator [mm] / Stabilizer Diameter [mm]:21,5	
2.0 Syncro (1HX1)	08.95 - 08.97		
2.0 GTI 16V	08.92 - 08.97		
2.8 VR6	01.92 - 08.97		
2.9 VR6 Syncro (1HX1)	10.94 - 08.97		
1.9 SDI	04.97 - 08.97		
1.9 D	11.91 - 08.97		
1.9 TD,GTD	11.91 - 08.97		
1.9 TDI, 81 kW	04.96 - 08.97		
Citystromer	11.94 - 08.97		
1.9 TDI, 66 kW	09.93 - 08.97	Mot. AHU Durchmesser Stabilisator [mm] / Stabilizer Diameter [mm]:21,5	
1.4	10.91 - 08.97	Mot. AEX Durchmesser Stabilisator [mm] / Stabilizer Diameter [mm]:21,5	
1.6, 55 kW	09.92 - 08.97	Mot. AEE Durchmesser Stabilisator [mm] / Stabilizer Diameter [mm]:21,5	
1.8, 66 kW	11.91 - 08.97	Mot. ADZ Durchmesser Stabilisator [mm] / Stabilizer Diameter [mm]:21,5	
1.8 Syncro (1HX1)	01.93 - 08.97		
2.0	11.91 - 08.97	Mot. AGG Durchmesser Stabilisator [mm] / Stabilizer Diameter [mm]:21,5	
1.6, 74 kW	07.95 - 08.97	Mot. AFT Durchmesser Stabilisator [mm] / Stabilizer Diameter [mm]:21,5	
1.9 TDI Syncro (1HX1)	08.95 - 08.97	Mot. 1Z Durchmesser Stabilisator [mm] / Stabilizer Diameter [mm]:21,5	
Faltenbalgsatz, Lenkung / Bellow Kit, steering system			**30111** **1H0 422 831 B**
1.4	10.91 - 08.97		
1.6	09.92 - 08.97		
1.8, 55 kW	11.91 - 08.97		
1.8, 66 kW	11.91 - 08.97		
1.8 Syncro (1HX1)	01.93 - 08.97		
2.0	11.91 - 08.97		
2.0 Syncro (1HX1)	08.95 - 08.97		
2.0 GTI 16V	08.92 - 08.97		
2.8 VR6	01.92 - 08.97		
2.9 VR6 Syncro (1HX1)	10.94 - 08.97		
1.9 SDI	04.97 - 08.97		
1.9 D	11.91 - 08.97		
1.9 TD,GTD	11.91 - 08.97		
1.9 TDI	09.93 - 08.97		
1.9 TDI Syncro (1HX1)	08.95 - 08.97		
Citystromer	11.94 - 08.97	für / for:TRW	
Faltenbalgsatz, Lenkung / Bellow Kit, steering system			**30126** **357 422 831 B**
1.4	10.91 - 08.97	für / for:ZF	
1.6	09.92 - 08.97		
1.8, 55 kW	11.91 - 08.97		
1.8, 66 kW	11.91 - 08.97		
2.0	11.91 - 08.97		
2.0 GTI 16V	08.92 - 08.97		
2.8 VR6	01.92 - 08.97		
1.9 D	11.91 - 08.97		
1.9 TD,GTD	11.91 - 08.97		
1.9 TDI	09.93 - 08.97		
Citystromer	11.94 - 08.97		

Achskörperlager / Mounting, axle body			**10222** **1H0 501 541 A**
1.4	10.91 - 08.97		
1.6	09.92 - 08.97		
1.8, 55 kW	11.91 - 08.97		
1.8, 66 kW	11.91 - 08.97		
2.0	11.91 - 08.97		
2.0 GTI 16V	08.92 - 08.97		
2.8 VR6	01.92 - 08.97		
1.9 SDI	04.97 - 08.97		
1.9 D	11.91 - 08.97		
1.9 TD,GTD	11.91 - 08.97		
1.9 TDI	09.93 - 08.97		
Citystromer	11.94 - 08.97		

VOLKSWAGEN

GOLF III (1H1) 08.91 - 08.97

Achskörperlager / Mounting, axle body mit Zubehör / With accessories			**27681** **1H0 501 541 A**
1.4	10.91 - 08.97		
1.6	09.92 - 08.97		
1.8, 55 kW	11.91 - 08.97		
1.8, 66 kW	11.91 - 08.97		
2.0	11.91 - 08.97		
2.0 GTI 16V	08.92 - 08.97		
2.8 VR6	01.92 - 08.97		
1.9 SDI	04.97 - 08.97		
1.9 D	11.91 - 08.97		
1.9 TD,GTD	11.91 - 08.97		
1.9 TDI	09.93 - 08.97		
Citystromer	11.94 - 08.97		

GOLF III Cabrio/Convertible (1E7) 07.93 - 05.98

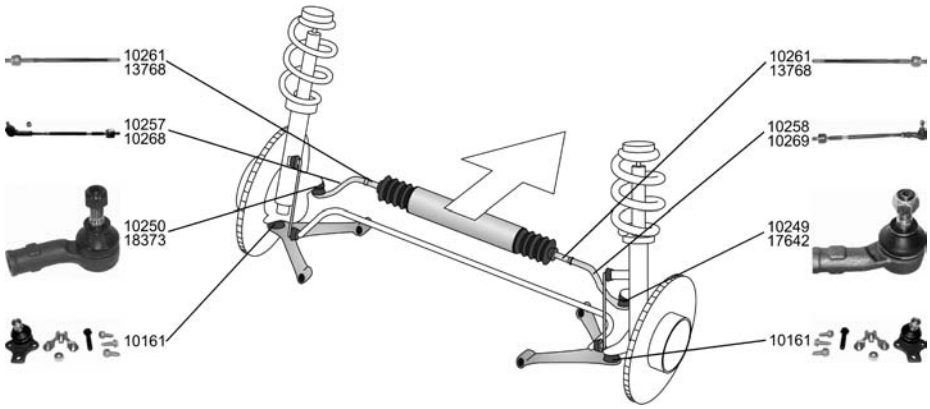

Spurstange / Tie Rod, steering Konusmaß [mm] / Cone Size [mm]:14 nur in Verbindung mit / Only in connection with:299 000 029 617 Rohr-Ø [mm] / Pipe Ø [mm]:15 Rohrdurchmesser am Sitz für Faltenbalg 12,7 mm (TRW-Lenkung) / Tube diameter at bellows seating 12,7 mm (TRW-steering)			**10257** **1H0 422 803**
1.8, 55 kW	07.93 - 05.98	für / for:TRW ->Chass. 1E-R-030000	
1.8, 66 kW	07.93 - 05.98		
2.0	07.93 - 05.98		
Spurstange / Tie Rod, steering Rohrdurchmesser am Sitz für Faltenbalg 12,7 mm (TRW-Lenkung) / Tube diameter at bellows seating 12,7 mm (TRW-steering)			**10258** **1H0 422 804**
1.8, 55 kW	07.93 - 05.98	für / for:TRW ->Chass. 1E-R-030000	
1.8, 66 kW	07.93 - 05.98		
2.0	07.93 - 05.98		
Spurstange / Tie Rod, steering Konusmaß [mm] / Cone Size [mm]:14 Rohr-Ø [mm] / Pipe Ø [mm]:13 nur in Verbindung mit / Only in connection with:299 217 163 617 für / for:ZF Rohrdurchmesser am Sitz für Faltenbalg 15 mm (ZF-Lenkung) / Tube diameter at bellows seating 15 mm (ZF-steering)			**10268** **1H0 422 803 B** 10250
1.8, 55 kW	07.93 - 05.98	->Chass. 1E-R-030000	
1.8, 66 kW	07.93 - 05.98		
2.0	07.93 - 05.98		
Spurstange / Tie Rod, steering für / for:ZF Konusmaß [mm] / Cone Size [mm]:14 Rohr-Ø [mm] / Pipe Ø [mm]:13 Rohrdurchmesser am Sitz für Faltenbalg 15 mm (ZF-Lenkung) / Tube diameter at bellows seating 15 mm (ZF-steering)			**10269** **1H0 422 804 B** 10249
1.8, 55 kW	07.93 - 05.98	->Chass. 1E-R-030000	
1.8, 66 kW	07.93 - 05.98		
2.0	07.93 - 05.98		

VOLKSWAGEN

GOLF III Cabrio/Convertible (1E7) 07.93 - 05.98

Spurstangenkopf / Tie-rod End — **10249** — **191 419 812**

Befestigungsart: hängend / Fastening Type: Suspended
Konusmaß [mm] / Cone Size [mm]:14
Innengewinde [mm] / Inner Thread [mm]:M14x1,5
Gewindeart: mit Rechtsgewinde / Thread Type: with right-hand thread
mit Zubehör / With accessories
Gewindemaß / Thread Size:M14x1,5

1.8, 55 kW	07.93 - 05.98	->Chass. 1E-R-030 000
1.8, 66 kW	07.93 - 05.98	
2.0	07.93 - 05.98	
1.8, 55 kW	07.93 - 05.98	->Chass. 1E-R-030000
1.8, 66 kW	07.93 - 05.98	
2.0	07.93 - 05.98	

Spurstangenkopf / Tie-rod End — **10250** — **191 419 811**

Befestigungsart: hängend / Fastening Type: Suspended
Konusmaß [mm] / Cone Size [mm]:14
Innengewinde [mm] / Inner Thread [mm]:M14x1,5
Gewindeart: mit Rechtsgewinde / Thread Type: with right-hand thread
mit Zubehör / With accessories
Gewindemaß / Thread Size:M14x1,5

1.8, 55 kW	07.93 - 05.98	->Chass. 1E-R-030 000
1.8, 66 kW	07.93 - 05.98	
2.0	07.93 - 05.98	
1.8, 55 kW	07.93 - 05.98	->Chass. 1E-R-030000
1.8, 66 kW	07.93 - 05.98	
2.0	07.93 - 05.98	

Spurstangenkopf / Tie-rod End — **17642** — **3A0 422 812**

Gewindeart: mit Rechtsgewinde / Thread Type: with right-hand thread
mit Zubehör / With accessories

1.8, 55 kW	07.93 - 05.98	Chass. 1E-S-000 001->
1.8, 66 kW	07.93 - 05.98	für / for:TRW
2.0	07.93 - 05.98	Chass. 1E-S-000 001->
1.6	10.94 - 05.98	
1.9 TDI, 66 kW	08.95 - 05.98	
1.9 TDI, 81 kW	07.96 - 05.98	

Spurstangenkopf / Tie-rod End — **18373** — **3A0 422 811**

Gewindeart: mit Rechtsgewinde / Thread Type: with right-hand thread
mit Zubehör / With accessories

1.8, 55 kW	07.93 - 05.98	Chass. 1E-S-000 001->
1.8, 66 kW	07.93 - 05.98	für / for:TRW
2.0	07.93 - 05.98	Chass. 1E-S-000 001->
1.6	10.94 - 05.98	
1.9 TDI, 66 kW	08.95 - 05.98	
1.9 TDI, 81 kW	07.96 - 05.98	

Axialgelenk, Spurstange / Axial Rod, tie rod — **10261** — **1H0 422 807 D**

für Lenkgetriebe-ID / For steering rack ID:TRW
ohne Zubehör / without accessories

ALL TYPES ausser/except for :	
1.8, 66 kW	07.93 - 05.98
1.9 TDI	08.95 - 05.98

Axialgelenk, Spurstange / Axial Rod, tie rod — **13768**

für OE / for OE 025 390 111 617 LH
für / for:ZF
Rohrdurchmesser am Sitz für Faltenbalg 15 mm (ZF-Lenkung) / Tube diameter at bellows seating 15 mm (ZF-steering)

1.8, 55 kW	07.93 - 05.98	->Chass. 1E-R-030000 Rohrdurchmesser am Sitz für Faltenbalg 15 mm (ZF-Lenkung) / Tube diameter at bellows seating 15 mm (ZF-steering)
1.8, 66 kW	07.93 - 05.98	
2.0	07.93 - 05.98	

Lenker, Radaufhängung / Track Control Arm — **14466** — **1H0 407 151**

ohne Trag-/Führungsgelenk / without support/ steering link
mit Gummilager / with rubber mounting
nur in Verbindung mit / Only in connection with:10161

10205
10203

ALL TYPES ausser/except for :	
1.8, 66 kW	07.93 - 05.98
1.9 TDI	08.95 - 05.98

VOLKSWAGEN

GOLF III Cabrio/Convertible (1E7) 07.93 - 05.98

Trag-/Führungsgelenk / Support-/ Steering Link
mit Zubehör / With accessories
für OE / for OE 191 407 151 B

ALL TYPES ausser/except for :

1.8, 66 kW	07.93 - 05.98
1.9 TDI	08.95 - 05.98

10161 **357 407 365**

Lagerung, Lenker / Mounting, wishbone

I12/A33

ALL TYPES ausser/except for :

1.8, 66 kW	07.93 - 05.98
1.9 TDI	08.95 - 05.98

10203 **357 407 182**

Lagerung, Lenker / Mounting, wishbone
ohne Montagehülsen / without mounting sleeve

ALL TYPES ausser/except for :

1.8, 66 kW	07.93 - 05.98
1.9 TDI	08.95 - 05.98

10205 **191 407 181 E**

Lagerung, Lenker / Mounting, wishbone
mit Montagehülsen / with mounting sleeve

ALL TYPES ausser/except for :

1.8, 66 kW	07.93 - 05.98
1.9 TDI	08.95 - 05.98

25352 **191 407 181 E**

Lagerung, Stabilisatorkoppelstange
Mounting, stabilizer coupling rod
Pendelstange / Suspension Rod

ALL TYPES ausser/except for :

1.8, 66 kW	07.93 - 05.98
1.9 TDI	08.95 - 05.98

17400 **191 411 327**

Faltenbalgsatz, Lenkung / Bellow Kit, steering system

ALL TYPES ausser/except for :

1.6	10.94 - 05.98
1.8, 66 kW	07.93 - 05.98
1.9 TDI	08.95 - 05.98

30111 **1H0 422 831 B**

Faltenbalgsatz, Lenkung / Bellow Kit, steering system

1.8, 55 kW	07.93 - 05.98
1.8, 66 kW	07.93 - 05.98
2.0	07.93 - 05.98

für / for:ZF
->Chass. 1E-R-030000

30126 **357 422 831 B**

Achskörperlager / Mounting, axle body

ALL TYPES ausser/except for :

1.8, 66 kW	07.93 - 05.98
1.9 TDI	08.95 - 05.98

10222 **1H0 501 541 A**

Achskörperlager / Mounting, axle body
mit Zubehör / With accessories

ALL TYPES ausser/except for :

1.8, 66 kW	07.93 - 05.98
1.9 TDI	08.95 - 05.98

27681 **1H0 501 541 A**

VOLKSWAGEN

GOLF III Variant/Estate/Break (1H5) 07.93 - 04.99

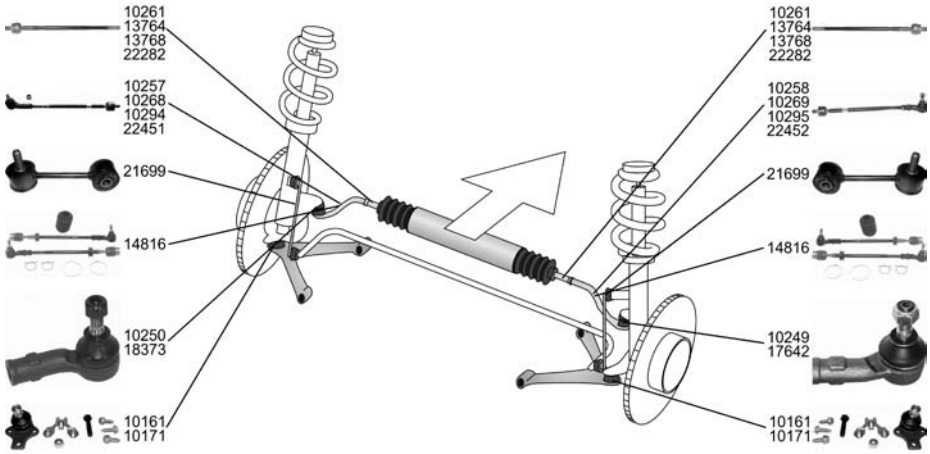

Spurstange / Tie Rod, steering Konusmaß [mm] / Cone Size [mm]:14 nur in Verbindung mit / Only in connection with:299 000 029 617 Rohr-Ø [mm] / Pipe Ø [mm]:15 Rohrdurchmesser am Sitz für Faltenbalg 12,7 mm (TRW-Lenkung) / Tube diameter at bellows seating 12,7 mm (TRW-steering)		**10257** **1H0 422 803**
1.4 07.93 - 04.99 1.8, 55 kW 07.93 - 04.99 1.8, 66 kW 07.93 - 04.99 2.0 07.93 - 04.99 1.9 D 07.93 - 04.99 1.9 TD 07.93 - 04.99	für / for:TRW ->Chass. 1H-R-458663	
Spurstange / Tie Rod, steering Rohrdurchmesser am Sitz für Faltenbalg 12,7 mm (TRW-Lenkung) / Tube diameter at bellows seating 12,7 mm (TRW-steering)		**10258** **1H0 422 804**
1.4 07.93 - 04.99 1.8, 55 kW 07.93 - 04.99 1.8, 66 kW 07.93 - 04.99 2.0 07.93 - 04.99 1.9 D 07.93 - 04.99 1.9 TD 07.93 - 04.99	für / for:TRW ->Chass. 1H-R-458663	
Spurstange / Tie Rod, steering Konusmaß [mm] / Cone Size [mm]:14 Rohr-Ø [mm] / Pipe Ø [mm]:13 nur in Verbindung mit / Only in connection with:299 217 163 617 für / for:ZF Rohrdurchmesser am Sitz für Faltenbalg 15 mm (ZF-Lenkung) / Tube diameter at bellows seating 15 mm (ZF-steering)		**10268** **1H0 422 803 B** 10250
1.4 07.93 - 04.99 1.8, 55 kW 07.93 - 04.99 1.8, 66 kW 07.93 - 04.99 2.0 07.93 - 04.99 1.9 D 07.93 - 04.99 1.9 TD 07.93 - 04.99		
Spurstange / Tie Rod, steering für / for:ZF Konusmaß [mm] / Cone Size [mm]:14 Rohr-Ø [mm] / Pipe Ø [mm]:13 Rohrdurchmesser am Sitz für Faltenbalg 15 mm (ZF-Lenkung) / Tube diameter at bellows seating 15 mm (ZF-steering)		**10269** **1H0 422 804 B** 10249
1.4 07.93 - 04.99 1.8, 55 kW 07.93 - 04.99 1.8, 66 kW 07.93 - 04.99 2.0 07.93 - 04.99 1.9 D 07.93 - 04.99 1.9 TD 07.93 - 04.99		

VOLKSWAGEN

GOLF III Variant/Estate/Break (1H5) 07.93 - 04.99

Spurstange / Tie Rod, steering
Konusmaß [mm] / Cone Size [mm]:14
Rohr-Ø [mm] / Pipe Ø [mm]:13
mit Zubehör / With accessories

10294 **1H0 419 803**

1.4	07.93 - 04.99
1.6, 74 kW	07.94 - 04.99
1.8, 55 kW	07.93 - 04.99
1.8, 66 kW	07.93 - 04.99
2.0	07.93 - 04.99
1.9 D	07.93 - 04.99
1.9 TD	07.93 - 04.99
1.9 TDI, 66 kW	03.94 - 04.99
1.9 TDI, 81 kW	04.96 - 04.99

Spurstange / Tie Rod, steering
Konusmaß [mm] / Cone Size [mm]:14
Rohr-Ø [mm] / Pipe Ø [mm]:13
mit Zubehör / With accessories

10295 **1H0 419 804**

1.4	07.93 - 04.99
1.6, 74 kW	07.94 - 04.99
1.8, 55 kW	07.93 - 04.99
1.8, 66 kW	07.93 - 04.99
2.0	07.93 - 04.99
1.9 D	07.93 - 04.99
1.9 TD	07.93 - 04.99
1.9 TDI, 66 kW	03.94 - 04.99
1.9 TDI, 81 kW	04.96 - 04.99

Spurstange / Tie Rod, steering
Achsausführung / Axle Version:TRW
mit Zubehör / With accessories
Rohrdurchmesser am Sitz für Faltenbalg 12,7 mm (TRW-Lenkung) / Tube diameter at bellows seating 12,7 mm (TRW-steering)

22451 **1H0 422 803 D**
18373
10261

1.4	07.93 - 04.99
1.6, 74 kW	07.94 - 04.99
1.8, 55 kW	07.93 - 04.99
1.8, 66 kW	07.93 - 04.99
1.8 Syncro	10.94 - 04.99
2.0	07.93 - 04.99
2.0 Syncro	08.95 - 04.99
2.9 VR6	10.94 - 04.99
2.9 VR6 Syncro	10.94 - 04.99
1.9 SDI	04.97 - 04.99
1.9 D	07.93 - 04.99
1.9 TD	07.93 - 04.99
1.9 TDI, 66 kW	03.94 - 04.99
1.9 TDI Syncro	07.95 - 04.99
1.9 TDI, 81 kW	04.96 - 04.99

Spurstange / Tie Rod, steering
Achsausführung / Axle Version:TRW
mit Zubehör / With accessories
Rohrdurchmesser am Sitz für Faltenbalg 12,7 mm (TRW-Lenkung) / Tube diameter at bellows seating 12,7 mm (TRW-steering)

22452 **1H0 422 804 D**
17642
10261

1.4	07.93 - 04.99
1.6, 74 kW	07.94 - 04.99
1.8, 55 kW	07.93 - 04.99
1.8, 66 kW	07.93 - 04.99
1.8 Syncro	10.94 - 04.99
2.0	07.93 - 04.99
2.0 Syncro	08.95 - 04.99
2.9 VR6	10.94 - 04.99
2.9 VR6 Syncro	10.94 - 04.99
1.9 SDI	04.97 - 04.99
1.9 D	07.93 - 04.99
1.9 TD	07.93 - 04.99
1.9 TDI, 66 kW	03.94 - 04.99
1.9 TDI Syncro	07.95 - 04.99
1.9 TDI, 81 kW	04.96 - 04.99

Reparatursatz, Spurstange / Repair Kit, tie rod

14816 **1H0 498 803/804 Z**
10295
10294

1.4	07.93 - 04.99
1.6, 74 kW	07.94 - 04.99
1.8, 55 kW	07.93 - 04.99
1.8, 66 kW	07.93 - 04.99
2.0	07.93 - 04.99
1.9 D	07.93 - 04.99
1.9 TD	07.93 - 04.99
1.9 TDI, 66 kW	03.94 - 04.99
1.9 TDI, 81 kW	04.96 - 04.99

VOLKSWAGEN

GOLF III Variant/Estate/Break (1H5) 07.93 - 04.99

Spurstangenkopf / Tie-rod End
Befestigungsart: hängend / Fastening Type: Suspended
Konusmaß [mm] / Cone Size [mm]:14
Innengewinde [mm] / Inner Thread [mm]:M14x1,5
Gewindeart: mit Rechtsgewinde / Thread Type: with right-hand thread
mit Zubehör / With accessories
Gewindemaß / Thread Size:M14x1,5

10249 **191 419 812**

1.4	07.93 - 04.99	->Chass. 1H-R-458 663 für Lenkgetriebe-ID / For steering rack ID:TRW
1.6, 55 kW	07.93 - 12.97	
1.8, 55 kW	07.93 - 04.99	
1.8, 66 kW	07.93 - 04.99	
2.0	07.93 - 04.99	
1.9 D	07.93 - 04.99	
1.9 TD	07.93 - 04.99	
1.4	07.93 - 04.99	für Fahrzeuge mit ZF Lenkung / for vehicles with ZF steering
1.6, 55 kW	07.93 - 12.97	
1.8, 55 kW	07.93 - 04.99	
1.8, 66 kW	07.93 - 04.99	
2.0	07.93 - 04.99	
1.9 D	07.93 - 04.99	
1.9 TD	07.93 - 04.99	
1.4	07.93 - 04.99	
1.6, 55 kW	07.93 - 12.97	
1.8, 55 kW	07.93 - 04.99	
1.8, 66 kW	07.93 - 04.99	
2.0	07.93 - 04.99	
1.9 D	07.93 - 04.99	
1.9 TD	07.93 - 04.99	
1.6, 74 kW	07.94 - 04.99	für Fahrzeuge mit ZF Lenkung / for vehicles with ZF steering
1.8 Syncro	10.94 - 04.99	
2.0 Syncro	08.95 - 04.99	
2.9 VR6	10.94 - 04.99	
2.9 VR6 Syncro	10.94 - 04.99	
1.9 SDI	04.97 - 04.99	
1.9 TDI, 66 kW	03.94 - 04.99	
1.9 TDI Syncro	07.95 - 04.99	
1.9 TDI, 81 kW	04.96 - 04.99	
1.6, 74 kW	07.94 - 04.99	
1.8 Syncro	10.94 - 04.99	
2.0 Syncro	08.95 - 04.99	
2.9 VR6	10.94 - 04.99	
2.9 VR6 Syncro	10.94 - 04.99	
1.9 SDI	04.97 - 04.99	
1.9 TDI, 66 kW	03.94 - 04.99	
1.9 TDI Syncro	07.95 - 04.99	
1.9 TDI, 81 kW	04.96 - 04.99	

VOLKSWAGEN

GOLF III Variant/Estate/Break (1H5) 07.93 - 04.99

Spurstangenkopf / Tie-rod End
Befestigungsart: hängend / Fastening Type: Suspended
Konusmaß [mm] / Cone Size [mm]:14
Innengewinde [mm] / Inner Thread [mm]:M14x1,5
Gewindeart: mit Rechtsgewinde / Thread Type: with right-hand thread
mit Zubehör / With accessories
Gewindemaß / Thread Size:M14x1,5

10250 **191 419 811**

1.4	07.93 - 04.99	->Chass. 1H-R-458 663
1.6, 55 kW	07.93 - 12.97	für Lenkgetriebe-ID / For steering rack ID:TRW
1.8, 55 kW	07.93 - 04.99	
1.8, 66 kW	07.93 - 04.99	
2.0	07.93 - 04.99	
1.9 D	07.93 - 04.99	
1.9 TD	07.93 - 04.99	
1.4	07.93 - 04.99	für Fahrzeuge mit ZF Lenkung / for vehicles with ZF steering
1.6, 55 kW	07.93 - 12.97	
1.8, 55 kW	07.93 - 04.99	
1.8, 66 kW	07.93 - 04.99	
2.0	07.93 - 04.99	
1.9 D	07.93 - 04.99	
1.9 TD	07.93 - 04.99	
1.4	07.93 - 04.99	
1.6, 55 kW	07.93 - 12.97	
1.8, 55 kW	07.93 - 04.99	
1.8, 66 kW	07.93 - 04.99	
2.0	07.93 - 04.99	
1.9 D	07.93 - 04.99	
1.9 TD	07.93 - 04.99	
1.6, 74 kW	07.94 - 04.99	für Fahrzeuge mit ZF Lenkung / for vehicles with ZF steering
1.8 Syncro	10.94 - 04.99	
2.0 Syncro	08.95 - 04.99	
2.9 VR6	10.94 - 04.99	
2.9 VR6 Syncro	10.94 - 04.99	
1.9 SDI	04.97 - 04.99	
1.9 TDI, 66 kW	03.94 - 04.99	
1.9 TDI Syncro	07.95 - 04.99	
1.9 TDI, 81 kW	04.96 - 04.99	
1.6, 74 kW	07.94 - 04.99	
1.8 Syncro	10.94 - 04.99	
2.0 Syncro	08.95 - 04.99	
2.9 VR6	10.94 - 04.99	
2.9 VR6 Syncro	10.94 - 04.99	
1.9 SDI	04.97 - 04.99	
1.9 TDI, 66 kW	03.94 - 04.99	
1.9 TDI Syncro	07.95 - 04.99	
1.9 TDI, 81 kW	04.96 - 04.99	

Spurstangenkopf / Tie-rod End
Gewindeart: mit Rechtsgewinde / Thread Type: with right-hand thread
mit Zubehör / With accessories

17642 **3A0 422 812**

1.4	07.93 - 04.99	Chass. 1H-R-458 664->
1.6, 55 kW	07.93 - 12.97	
1.8, 55 kW	07.93 - 04.99	
1.8, 66 kW	07.93 - 04.99	
2.0	07.93 - 04.99	
1.9 D	07.93 - 04.99	
1.9 TD	07.93 - 04.99	
1.9 TDI, 66 kW	03.94 - 04.99	
1.6, 74 kW	07.94 - 04.99	
1.8 Syncro	10.94 - 04.99	
2.0 Syncro	08.95 - 04.99	
2.9 VR6	10.94 - 04.99	
2.9 VR6 Syncro	10.94 - 04.99	
1.9 SDI	04.97 - 04.99	
1.9 TDI Syncro	07.95 - 04.99	
1.9 TDI, 81 kW	04.96 - 04.99	

VOLKSWAGEN

GOLF III Variant/Estate/Break (1H5) 07.93 - 04.99

Spurstangenkopf / Tie-rod End Gewindeart: mit Rechtsgewinde / Thread Type: with right-hand thread mit Zubehör / With accessories			**18373** **3A0 422 811**
1.4	07.93 - 04.99	Chass. 1H-R-458 664->	
1.6, 55 kW	07.93 - 12.97		
1.8, 55 kW	07.93 - 04.99		
1.8, 66 kW	07.93 - 04.99		
2.0	07.93 - 04.99		
1.9 D	07.93 - 04.99		
1.9 TD	07.93 - 04.99		
1.9 TDI, 66 kW	03.94 - 04.99		
1.6, 74 kW	07.94 - 04.99		
1.8 Syncro	10.94 - 04.99		
2.0 Syncro	08.95 - 04.99		
2.9 VR6	10.94 - 04.99		
2.9 VR6 Syncro	10.94 - 04.99		
1.9 SDI	04.97 - 04.99		
1.9 TDI Syncro	07.95 - 04.99		
1.9 TDI, 81 kW	04.96 - 04.99		
Axialgelenk, Spurstange / Axial Rod, tie rod für Lenkgetriebe-ID / For steering rack ID:TRW ohne Zubehör / without accessories			**10261** **1H0 422 807 D**
1.4	07.93 - 04.99		
1.6, 74 kW	07.94 - 04.99		
1.8, 55 kW	07.93 - 04.99		
1.8, 66 kW	07.93 - 04.99		
2.0	07.93 - 04.99		
1.9 SDI	04.97 - 04.99		
1.9 D	07.93 - 04.99		
1.9 TD	07.93 - 04.99		
1.9 TDI, 66 kW	03.94 - 04.99		
1.9 TDI, 81 kW	04.96 - 04.99		
Axialgelenk, Spurstange / Axial Rod, tie rod Gewindemaß / Thread Size:M22x1,5 Gewindeart: mit Rechtsgewinde / Thread Type: with right-hand thread			**13764** **1H0 419 807**
1.4	07.93 - 04.99		
1.6, 74 kW	07.94 - 04.99		
1.8, 55 kW	07.93 - 04.99		
1.8, 66 kW	07.93 - 04.99		
2.0	07.93 - 04.99		
1.9 D	07.93 - 04.99		
1.9 TD	07.93 - 04.99		
1.9 TDI, 66 kW	03.94 - 04.99		
1.9 TDI, 81 kW	04.96 - 04.99		
Axialgelenk, Spurstange / Axial Rod, tie rod für OE / for OE 025 390 111 617 LH für / for:ZF Rohrdurchmesser am Sitz für Faltenbalg 15 mm (ZF-Lenkung) / Tube diameter at bellows seating 15 mm (ZF-steering)			**13768**
1.4	07.93 - 04.99		
1.8, 55 kW	07.93 - 04.99		
1.8, 66 kW	07.93 - 04.99		
2.0	07.93 - 04.99		
1.9 D	07.93 - 04.99		
1.9 TD	07.93 - 04.99		
Axialgelenk, Spurstange / Axial Rod, tie rod für OE / for OE 025 390 142 617 LH			**22282** **1J0 422 807 A**
1.9 SDI	04.97 - 04.99		

VOLKSWAGEN

GOLF III Variant/Estate/Break (1H5) 07.93 - 04.99

Lenker, Radaufhängung / Track Control Arm
ohne Trag-/Führungsgelenk / without support/ steering link
mit Gummilager / with rubber mounting
nur in Verbindung mit / Only in connection with:10161

14466 **1H0 407 151**
10205
10203

1.4	07.93 - 04.99
1.6, 74 kW	07.94 - 04.99
1.8, 55 kW	07.93 - 04.99
1.8, 66 kW	07.93 - 04.99
1.8 Syncro	10.94 - 04.99
2.0	07.93 - 04.99
2.0 Syncro	08.95 - 04.99
1.9 D	07.93 - 04.99
1.9 TD	07.93 - 04.99
1.9 TDI, 66 kW	03.94 - 04.99
1.9 TDI Syncro	07.95 - 04.99
1.9 TDI, 81 kW	04.96 - 04.99

Trag-/Führungsgelenk / Support-/ Steering Link
mit Zubehör / With accessories
für OE / for OE 191 407 151 B

10161 **357 407 365**

1.4	07.93 - 04.99
1.8, 55 kW	07.93 - 04.99
1.8, 66 kW	07.93 - 04.99
1.8 Syncro	10.94 - 04.99
2.0	07.93 - 04.99
2.0 Syncro	08.95 - 04.99
1.9 D	07.93 - 04.99
1.9 TD	07.93 - 04.99
1.9 TDI, 66 kW	03.94 - 04.99
1.9 TDI Syncro	07.95 - 04.99
1.9 TDI, 81 kW	04.96 - 04.99

Trag-/Führungsgelenk / Support-/ Steering Link
Gewindemaß / Thread Size:M12x1,5
Gewindeart: mit Rechtsgewinde / Thread Type: with right-hand thread

10171 **1H0 407 365**

2.9 VR6	10.94 - 04.99
2.9 VR6 Syncro	10.94 - 04.99

Lagerung, Lenker / Mounting, wishbone I12/A33

10203 **357 407 182**

ALL TYPES ausser/except for :	
1.8, 66 kW	07.93 - 04.99
1.8 GT	07.93 - 12.99
1.9 TDI, 66 kW	03.94 - 04.99

Stange/Strebe, Stabilisator / Rod/Strut, stabiliser
Pendelstange / Suspension Rod
nur paarweise austauschen / Replace in pairs only

(x2)

21699 **1J0 411 315 G**

1.8 Syncro	10.94 - 04.99
2.9 VR6 Syncro	10.94 - 04.99
1.9 SDI	04.97 - 04.99
1.9 TDI, 81 kW	04.96 - 04.99

Stabilisatorlager / Mounting, Stabilizer I17

14341 **191 411 314**

1.9 TDI Syncro	07.95 - 04.99

VOLKSWAGEN

GOLF III Variant/Estate/Break (1H5) 07.93 - 04.99

Stabilisatorlager / Mounting, Stabilizer		I19	**27461** **1H0 411 314**
1.4, 40 kW	07.93 - 04.99	Durchmesser Stabilisator [mm] / Stabilizer Diameter [mm]:21,5	
1.8, 55 kW	07.93 - 04.99		
1.8 Syncro	10.94 - 04.99		
2.0 Syncro	08.95 - 04.99		
2.9 VR6 Syncro	10.94 - 04.99		
1.9 SDI	04.97 - 04.99		
1.9 D	07.93 - 04.99		
1.9 TD	07.93 - 04.99		
1.9 TDI, 81 kW	04.96 - 04.99		
1.4, 44 kW	07.93 - 04.99	Mot. APQ Durchmesser Stabilisator [mm] / Stabilizer Diameter [mm]:21,5	
1.8, 66 kW	07.93 - 04.99	Mot. ADZ Durchmesser Stabilisator [mm] / Stabilizer Diameter [mm]:21,5	
2.0	07.93 - 04.99	Mot. AGG Durchmesser Stabilisator [mm] / Stabilizer Diameter [mm]:21,5	
1.9 TDI, 66 kW	03.94 - 04.99	Mot. AHU Durchmesser Stabilisator [mm] / Stabilizer Diameter [mm]:21,5	
1.9 TDI Syncro	07.95 - 04.99		
1.6, 74 kW	07.94 - 04.99	Mot. AFT Durchmesser Stabilisator [mm] / Stabilizer Diameter [mm]:21,5	
Faltenbalgsatz, Lenkung / Bellow Kit, steering system			**30111** **1H0 422 831 B**
1.4	07.93 - 04.99	->Chass. 1H-R-990 000	
1.6, 74 kW	07.94 - 04.99		
1.8, 55 kW	07.93 - 04.99		
1.8, 66 kW	07.93 - 04.99		
2.0	07.93 - 04.99		
1.9 D	07.93 - 04.99		
1.9 TD	07.93 - 04.99		
1.9 TDI, 66 kW	03.94 - 04.99		
1.6, 55 kW	07.93 - 12.97		
1.8 Syncro	10.94 - 04.99		
2.0 Syncro	08.95 - 04.99		
2.9 VR6	10.94 - 04.99		
1.9 SDI	04.97 - 04.99		
1.9 TDI Syncro	07.95 - 04.99		
2.9 VR6 Syncro	10.94 - 04.99	->Chass. 1H-R-458663	
1.9 TDI, 81 kW	04.96 - 04.99		
Faltenbalgsatz, Lenkung / Bellow Kit, steering system			**30126** **357 422 831 B**
1.4	07.93 - 04.99	für / for:ZF	
1.8, 55 kW	07.93 - 04.99		
1.8, 66 kW	07.93 - 04.99		
2.0	07.93 - 04.99		
1.9 D	07.93 - 04.99		
1.9 TD	07.93 - 04.99		

Achskörperlager / Mounting, axle body		I12/A56	**21419** **1H9 501 541**
1.4	07.93 - 04.99		
1.6, 74 kW	07.94 - 04.99		
1.8, 55 kW	07.93 - 04.99		
1.8, 66 kW	07.93 - 04.99		
2.0	07.93 - 04.99		
1.9 SDI	04.97 - 04.99		
1.9 D	07.93 - 04.99		
1.9 TD	07.93 - 04.99		
1.9 TDI, 66 kW	03.94 - 04.99		
1.9 TDI, 81 kW	04.96 - 04.99		

VOLKSWAGEN

GOLF IV (1J1) 08.97 -

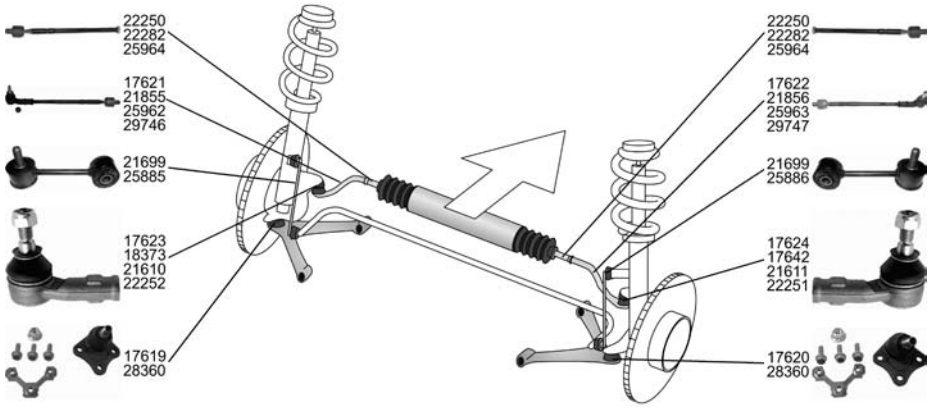

Spurstange / Tie Rod, steering mit Zubehör / With accessories			**17621** **1J0 422 803 A** 17623 22282
1.4 16V	08.97 -	->Chass. 1J-WP050 832	
1.6, 74 kW	08.97 - 02.00		
1.8	08.97 -		
1.8 T	08.97 -		
2.3 V5, 110 kW	08.97 - 10.00		
1.9 SDI	08.97 -		
1.9 TDI, 66 kW	08.97 - 06.01		
1.9 TDI, 81 kW	08.97 - 05.04		
Spurstange / Tie Rod, steering mit Zubehör / With accessories			**17622** **1J0 422 804 A** 17624 22282
1.4 16V	08.97 -	->Chass. 1J-WW062359	
1.6, 74 kW	08.97 - 02.00	->Chass. 1J-WD039150	
1.8	08.97 -	->Chass. 1J-WP050832	
1.8 T	08.97 -	->Chass. 1J-WB027484	
2.3 V5, 110 kW	08.97 - 10.00		
1.9 SDI	08.97 -		
1.9 TDI, 66 kW	08.97 - 06.01		
1.9 TDI, 81 kW	08.97 - 05.04		
Spurstange / Tie Rod, steering			**21855** **1J0 422 803 B** 22250 22252
1.6 16V	02.00 -	Chass. 1J-WW062 360->	
1.8	08.97 -	Chass. 1J-WB027 485->	
1.8 4motion	05.98 -	Chass. 1J-WD039 151->	
1.8 T	08.97 -	Chass. 1J-WP050 833->	
2.0	07.98 -		
2.0 4motion	10.00 -		
2.3 V5	08.97 - 10.00		
2.3 V5 4motion	12.98 - 10.00		
1.9 SDI	08.97 -		
1.9 TDI	08.97 - 05.04		
1.9 TDI 4motion	04.98 - 06.01		
1.4 16V	08.97 -	Chass. 1J-WW062 360->	
1.6	08.97 - 02.00	Chass. 1J-WP050 833->	
		Chass. 1J-WD039 151->	
1.6 FSI	01.02 -		
1.8 T GTI	08.01 -		

VOLKSWAGEN

GOLF IV (1J1) 08.97 -

Spurstange / Tie Rod, steering			**21856** 1J0 422 804 B 22250 22251
1.4 16V	08.97 -	Chass. 1J-WP050833->	
1.6, 74 kW	08.97 - 02.00	Chass. 1J-WW062360->	
1.8	08.97 -	Chass. 1J-WD039151->	
1.8 T	08.97 -	Chass. 1J-WB027485->	
2.3 V5, 110 kW	08.97 - 10.00		
1.9 SDI	08.97 -		
1.9 TDI, 66 kW	08.97 - 06.01		
1.9 TDI, 81 kW	08.97 - 05.04		
1.6, 75 kW	08.00 -		
1.6 16V	02.00 -		
1.6 FSI	01.02 -		
1.8 4motion	05.98 -		
1.8 T GTI	08.01 -		
2.0	07.98 -		
2.0 4motion	10.00 -		
2.3 V5 4motion	12.98 - 10.00		
2.3 V5, 125 kW	10.00 -		
1.9 TDI 4motion	04.98 - 06.01		
1.9 TDI, 74 kW	09.00 -		
1.9 TDI, 85 kW	12.98 - 06.01		
1.9 TDI, 96 kW	11.00 -		
1.9 TDI, 110 kW	05.00 -		
Spurstange / Tie Rod, steering für Fahrzeuge mit Sportfahrwerk / for vehicles with sports suspension Felgengröße [Zoll] / Rim Size [in]:18 mit Zubehör / With accessories			**25962** 8N0 422 803 D 25964 21610
3.2 R32 4motion	09.02 -		
Spurstange / Tie Rod, steering für Fahrzeuge mit Sportfahrwerk / for vehicles with sports suspension Felgengröße [Zoll] / Rim Size [in]:18			**25963** 8N0 422 804 D 25964 21611
3.2 R32 4motion	09.02 -		
Spurstange / Tie Rod, steering			**29746** 1J0 422 803 E 22250 18373
2.8 V6 4motion	03.99 -		
Spurstange / Tie Rod, steering			**29747** 1J0 422 804 E 22250 17642
2.8 V6 4motion	03.99 -		
Spurstangenkopf / Tie-rod End Innengewinde [mm] / Inner Thread [mm]:M14x1,5 Gewindeart: mit Rechtsgewinde / Thread Type: with right-hand thread mit Zubehör / With accessories			**17623** 1J0 422 811 A
1.4 16V	08.97 -	->Chass. 1J-WW062359	
1.6, 74 kW	08.97 - 02.00	->Chass. 1J-WB027484	
1.8	08.97 -	->Chass. 1J-WP050832	
1.8 T	08.97 -	->Chass. 1J-WD039150	
2.3 V5, 110 kW	08.97 - 10.00		
1.9 SDI	08.97 -		
1.9 TDI, 66 kW	08.97 - 06.01		
1.9 TDI, 81 kW	08.97 - 05.04		
Spurstangenkopf / Tie-rod End Innengewinde [mm] / Inner Thread [mm]:M14x1,5 Gewindeart: mit Rechtsgewinde / Thread Type: with right-hand thread mit Zubehör / With accessories			**17624** 1J0 422 812 A
1.4 16V	08.97 -	->Chass. 1J-WW062359	
1.6, 74 kW	08.97 - 02.00	->Chass. 1J-WB027484	
1.8	08.97 -	->Chass. 1J-WP050832	
1.8 T	08.97 -	->Chass. 1J-WD039150	
2.3 V5, 110 kW	08.97 - 10.00		
1.9 SDI	08.97 -		
1.9 TDI, 66 kW	08.97 - 06.01		
1.9 TDI, 81 kW	08.97 - 05.04		
Spurstangenkopf / Tie-rod End Gewindeart: mit Rechtsgewinde / Thread Type: with right-hand thread mit Zubehör / With accessories			**17642** 3A0 422 812
2.8 V6 4motion	03.99 -		

VOLKSWAGEN

GOLF IV (1J1) 08.97 -

Spurstangenkopf / Tie-rod End
Gewindeart: mit Rechtsgewinde / Thread Type: with right-hand thread
mit Zubehör / With accessories

18373 **3A0 422 811**

2.8 V6 4motion	03.99 -	

Spurstangenkopf / Tie-rod End
Innengewinde [mm] / Inner Thread [mm]:M16x1,5
Gewindeart: mit Rechtsgewinde / Thread Type: with right-hand thread

21610

3.2 R32 4motion	09.02 -	

Spurstangenkopf / Tie-rod End
Innengewinde [mm] / Inner Thread [mm]:M16x1,5
Gewindeart: mit Rechtsgewinde / Thread Type: with right-hand thread

21611

3.2 R32 4motion	09.02 -	

Spurstangenkopf / Tie-rod End
Befestigungsart: hängend / Fastening Type: Suspended
Innengewinde [mm] / Inner Thread [mm]:M14x1,5
Gewindeart: mit Rechtsgewinde / Thread Type: with right-hand thread

22251 **1J0 422 812 B**

1.4 16V	08.97 -	Chass. 1J-WW062360->
1.6, 74 kW	08.97 - 02.00	Chass. 1J-WB027485->
1.8	08.97 -	Chass. 1J-WD039151->
1.8 T	08.97 -	Chass. 1J-WP050833->
2.3 V5, 110 kW	08.97 - 10.00	
1.9 SDI	08.97 -	
1.9 TDI, 66 kW	08.97 - 06.01	
1.9 TDI, 81 kW	08.97 - 05.04	
1.6, 75 kW	08.00 -	
1.6 16V	02.00 -	
1.6 FSI	01.02 -	
1.8 4motion	05.98 -	
1.8 T GTI	08.01 -	
2.0	07.98 -	
2.0 4motion	10.00 -	
2.3 V5 4motion	12.98 - 10.00	
2.3 V5, 125 kW	10.00 -	
1.9 TDI 4motion	04.98 - 06.01	
1.9 TDI, 74 kW	09.00 -	
1.9 TDI, 85 kW	12.98 - 06.01	
1.9 TDI, 96 kW	11.00 -	
1.9 TDI, 110 kW	05.00 -	

Spurstangenkopf / Tie-rod End
Befestigungsart: hängend / Fastening Type: Suspended
Innengewinde [mm] / Inner Thread [mm]:M14x1,5
Gewindeart: mit Rechtsgewinde / Thread Type: with right-hand thread

22252 **1J0 422 811 B**

1.4 16V	08.97 -	Chass. 1J-WW062360->
1.6, 74 kW	08.97 - 02.00	Chass. 1J-WB027485->
1.8	08.97 -	Chass. 1J-WP050833->
1.8 T	08.97 -	Chass. 1J-WD039151->
2.3 V5, 110 kW	08.97 - 10.00	1J-W.. P (Mosel) D (Bratislava) B (Brüssel) W (Wolfsburg) / 1J-W.. P (Mosel) D (Bratislava) B (Brussels) W (Wolfsburg)
1.9 SDI	08.97 -	
1.9 TDI, 66 kW	08.97 - 06.01	
1.9 TDI, 81 kW	08.97 - 05.04	
1.8 4motion	05.98 -	1J-W.. P (Mosel) D (Bratislava) B (Brüssel) W (Wolfsburg) / 1J-W.. P (Mosel) D (Bratislava) B (Brussels) W (Wolfsburg)
2.0	07.98 -	
2.3 V5 4motion, 110 kW	12.98 - 10.00	
1.9 TDI 4motion, 66 kW	04.98 - 06.01	
1.9 TDI, 85 kW	12.98 - 06.01	
1.6, 75 kW	08.00 -	
1.6 16V	02.00 -	
1.6 FSI	01.02 -	
2.0 4motion	10.00 -	
2.3 V5, 125 kW	10.00 -	
2.3 V5 4motion, 125 kW	10.00 -	
1.9 TDI, 74 kW	09.00 -	
1.9 TDI 4motion, 74 kW	09.00 -	
1.9 TDI 4motion, 85 kW	09.99 - 06.01	
1.9 TDI, 96 kW	11.00 -	
1.9 TDI 4motion, 96 kW	11.00 -	
1.9 TDI, 110 kW	05.00 -	
1.9 TDI 4motion, 110 kW	02.00 -	

VOLKSWAGEN

GOLF IV (1J1) 08.97 -

Axialgelenk, Spurstange / Axial Rod, tie rod ohne Zubehör / without accessories			**22250** **1J0 422 807 B**
1.4 16V	08.97 -	Chass. 1J-WW062360->	
1.6, 74 kW	08.97 - 02.00	Chass. 1J-WB027485->	
1.8	08.97 -	Chass. 1J-WD039151->	
1.8 T	08.97 -	Chass. 1J-WP050833->	
2.3 V5, 110 kW	08.97 - 10.00		
1.9 SDI	08.97 -		
1.9 TDI, 66 kW	08.97 - 06.01		
1.9 TDI, 81 kW	08.97 - 05.04		
1.8 4motion	05.98 -		
2.0	07.98 -		
2.3 V5 4motion, 110 kW	12.98 - 10.00		
2.8 V6 4motion	03.99 -		
1.9 TDI 4motion, 66 kW	04.98 - 06.01		
1.9 TDI, 85 kW	12.98 - 06.01		
Axialgelenk, Spurstange / Axial Rod, tie rod für OE / for OE 025 390 142 617 LH			**22282** **1J0 422 807 A**
1.4 16V	08.97 -	->Chass. 1J-WW062359	
1.6, 74 kW	08.97 - 02.00	->Chass. 1J-WD039150	
1.8	08.97 -	->Chass. 1J-WP050832	
1.8 T	08.97 -	->Chass. 1J-WB027485	
1.9 SDI	08.97 -	1J-W.. P (Mosel) D (Bratislava) B (Brüssel) W (Wolfsburg) / 1J-W.. P (Mosel) D (Bratislava) B (Brussels) W (Wolfsburg)	
1.9 TDI, 66 kW	08.97 - 06.01		
1.9 TDI, 81 kW	08.97 - 05.04		
2.3 V5, 110 kW	08.97 - 10.00	->Chass. 1J-WW062359 ->Chass. 1J-WP050832 ->Chass. 1J-WB027485 ->Chass. 1J-WD039150	
Axialgelenk, Spurstange / Axial Rod, tie rod für Fahrzeuge mit Sportfahrwerk / for vehicles with sports suspension Felgengröße [Zoll] / Rim Size [in]:18 ohne Zubehör / without accessories			**25964** **8N0 422 807 D**
3.2 R32 4motion	09.02 -		
Lenker, Radaufhängung / Track Control Arm ohne Trag-/Führungsgelenk / without support/ steering link mit Gummilager / with rubber mounting nur in Verbindung mit / Only in connection with:17619 nur in Verbindung mit / Only in connection with:17620			**22475** **1J0 407 151 C** 21113 10203
ALL TYPES ausser/except for :			
2.0 4Motion	04.00 -		
2.0 Bi-Fuel	05.02 -		
3.2 R32 4motion	10.03 -		
Trag-/Führungsgelenk / Support-/ Steering Link Flanschlochdurchmesser [mm] / Flange Hole Diameter [mm]:8,55			**17619** **1J0 407 365 C**
1.4 16V	08.97 -		
1.6	08.97 - 02.00		
1.6 16V	02.00 -		
1.6 FSI	01.02 -		
1.8	08.97 -		
1.8 4motion	05.98 -		
1.8 T	08.97 -		
1.8 T GTI	08.01 -		
2.0	07.98 -		
2.0 4motion	10.00 -		
2.3 V5	08.97 - 10.00		
2.3 V5 4motion	12.98 - 10.00		
2.8 V6 4motion	03.99 -		
1.9 SDI	08.97 -		
1.9 TDI	08.97 - 05.04		
1.9 TDI 4motion	04.98 - 06.01		

VOLKSWAGEN

GOLF IV (1J1) 08.97 -

Trag-/Führungsgelenk / Support-/ Steering Link Flanschlochdurchmesser [mm] / Flange Hole Diameter [mm]:8,55			**17620** **1J0 407 366 C**
1.4 16V	08.97 -		
1.6	08.97 - 02.00		
1.6 16V	02.00 -		
1.6 FSI	01.02 -		
1.8	08.97 -		
1.8 4motion	05.98 -		
1.8 T	08.97 -		
1.8 T GTI	08.01 -		
2.0	07.98 -		
2.0 4motion	10.00 -		
2.3 V5	08.97 - 10.00		
2.3 V5 4motion	12.98 - 10.00		
2.8 V6 4motion	03.99 -		
1.9 SDI	08.97 -		
1.9 TDI	08.97 - 05.04		
1.9 TDI 4motion	04.98 - 06.01		
Trag-/Führungsgelenk / Support-/ Steering Link Konusmaß [mm] / Cone Size [mm]:20,24 mit Befestigungsmaterial / with fastening material			**28360** **8N0 407 365 C**
3.2 R32 4motion	09.02 -		
Lagerung, Lenker / Mounting, wishbone		I12/A33	**10203** **357 407 182**
ALL TYPES ausser/except for :			
2.0 4Motion	04.00 -		
2.0 Bi-Fuel	05.02 -		
3.2 R32 4motion	10.03 -		
Lagerung, Lenker / Mounting, wishbone		I13/A60	**21113** **1J0 407 181**
ALL TYPES ausser/except for :			
2.0 4Motion	04.00 -		
2.0 Bi-Fuel	05.02 -		
3.2 R32 4motion	10.03 -		
Lagerung, Lenker / Mounting, wishbone			**26606** **8N0 407 182 A**
3.2 R32 4motion	09.02 -		
Lagerung, Lenker / Mounting, wishbone			**27132** **8N0 407 181 B**
3.2 R32 4motion	09.02 -		
Stange/Strebe, Stabilisator / Rod/Strut, stabiliser Pendelstange / Suspension Rod nur paarweise austauschen / Replace in pairs only		(x2)	**21699** **1J0 411 315 G**
1.4 16V	08.97 -		
1.6	08.97 - 02.00		
1.8	08.97 -		
1.8 4motion	05.98 -		
1.8 T	08.97 -		
2.0	07.98 -		
2.0 4motion	10.00 -		
2.3 V5	08.97 - 10.00		
2.3 V5 4motion	12.98 - 10.00		
2.8 V6 4motion	03.99 -		
1.9 SDI	08.97 -		
1.9 TDI	08.97 - 05.04		
1.9 TDI 4motion	04.98 - 06.01		
Stange/Strebe, Stabilisator / Rod/Strut, stabiliser Pendelstange / Suspension Rod			**25885** **1J0 411 315 D**
1.8 4motion	05.98 -		
2.0 4motion	10.00 -		
2.3 V5 4motion	12.98 - 10.00		
2.8 V6 4motion	03.99 -		
3.2 R32 4motion	09.02 -		
1.9 TDI 4motion	04.98 - 06.01		

VOLKSWAGEN

GOLF IV (1J1) 08.97 -

Stange/Strebe, Stabilisator / Rod/Strut, stabiliser
Pendelstange / Suspension Rod

2.0 4motion	10.00 -	
2.3 V5 4motion	12.98 - 10.00	
2.8 V6 4motion	03.99 -	
3.2 R32 4motion	09.02 -	
1.9 TDI 4motion	04.98 - 06.01	
1.8 4motion	05.98 -	05.1999-> Chass. 1J-Y-000 001->

25886 **1J0 411 316 D**

Faltenbalgsatz, Lenkung / Bellow Kit, steering system

ALL TYPES ausser/except for :

2.0 4Motion	04.00 -
2.0 Bi-Fuel	05.02 -
3.2 R32 4motion	10.03 -

30177 **1J0 422 831 B**

Stange/Strebe, Stabilisator / Rod/Strut, stabiliser
Pendelstange / Suspension Rod
für Fahrzeuge ohne Schlechtwegeausführung / For vehicles without off-road suspension
mit Zubehör / With accessories

(x2)

1.8 4motion	05.98 -
2.0	07.98 -
2.0 4motion	10.00 -
2.3 V5 4motion	12.98 - 10.00
2.8 V6 4motion	03.99 -
3.2 R32 4motion	09.02 -
1.9 TDI 4motion	04.98 - 06.01
1.9 TDI, 85 kW	12.98 - 06.01

21683 **1J0 505 466 B**

Stange/Strebe, Stabilisator / Rod/Strut, stabiliser
Pendelstange / Suspension Rod
für Fahrzeuge mit Schlechtwegeausführung / for vehicles with off-road suspension
mit Zubehör / With accessories

(x2)

1.8 4motion	05.98 -
2.0	07.98 -
2.3 V5 4motion, 110 kW	12.98 - 10.00
2.8 V6 4motion	03.99 -
1.9 TDI 4motion, 66 kW	04.98 - 06.01
1.9 TDI, 85 kW	12.98 - 06.01
1.9 TDI 4motion, 85 kW	09.99 - 06.01

21698 **1J0 505 466 C**

Achskörperlager / Mounting, axle body
Hydrolager paarweise durch konventionelles Lager ersetzen. / change hydro bearing in pairs by conventional bearing

A71,40

1.4 16V	08.97 -
1.6	08.97 - 02.00
1.6 16V	02.00 -
1.6 FSI	01.02 -
1.8	08.97 -
1.8 T	08.97 -
1.8 T GTI	08.01 -
2.0	07.98 -
2.3 V5	08.97 - 10.00
1.9 SDI	08.97 -
1.9 TDI	08.97 - 05.04

21236 **1J0 501 541 C**

Achskörperlager / Mounting, axle body
mit Zubehör / With accessories

1.4 16V	08.97 -
1.6	08.97 - 02.00
1.6 16V	02.00 -
1.6 FSI	01.02 -
1.8	08.97 -
1.8 T	08.97 -
1.8 T GTI	08.01 -
2.0	07.98 -
2.3 V5	08.97 - 10.00
1.9 SDI	08.97 -
1.9 TDI	08.97 - 05.04

27627 **1J0 501 541 C**

VOLKSWAGEN

GOLF IV Cabrio/Convertible (1E7) 06.98 -

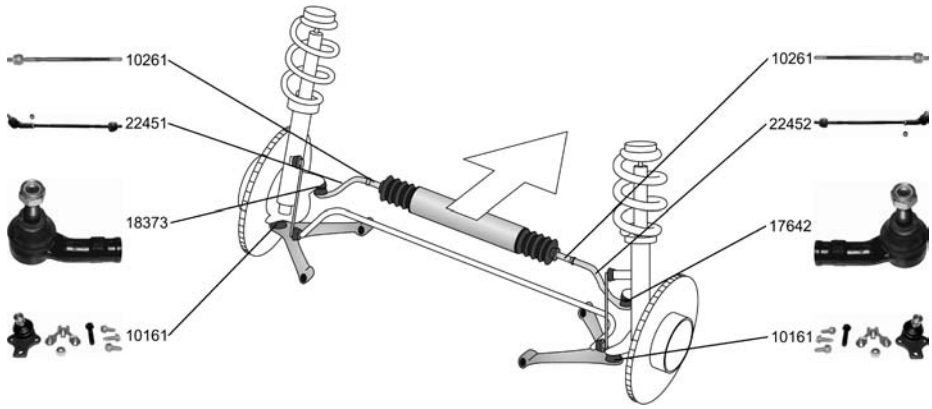

Spurstange / Tie Rod, steering Achsausführung / Axle Version:TRW mit Zubehör / With accessories Rohrdurchmesser am Sitz für Faltenbalg 12,7 mm (TRW-Lenkung) / Tube diameter at bellows seating 12,7 mm (TRW-steering) ALL TYPES		**22451** **1H0 422 803 D** 18373 10261
Spurstange / Tie Rod, steering Achsausführung / Axle Version:TRW mit Zubehör / With accessories Rohrdurchmesser am Sitz für Faltenbalg 12,7 mm (TRW-Lenkung) / Tube diameter at bellows seating 12,7 mm (TRW-steering) ALL TYPES		**22452** **1H0 422 804 D** 17642 10261
Spurstangenkopf / Tie-rod End Gewindeart: mit Rechtsgewinde / Thread Type: with right-hand thread mit Zubehör / With accessories ALL TYPES		**17642** **3A0 422 812**
Spurstangenkopf / Tie-rod End Gewindeart: mit Rechtsgewinde / Thread Type: with right-hand thread mit Zubehör / With accessories ALL TYPES		**18373** **3A0 422 811**
Axialgelenk, Spurstange / Axial Rod, tie rod für Lenkgetriebe-ID / For steering rack ID:TRW ohne Zubehör / without accessories 1.6 06.98 - 2.0 06.98 - 1.9 TDI, 66 kW 06.98 -		**10261** **1H0 422 807 D**
Lenker, Radaufhängung / Track Control Arm ohne Trag-/Führungsgelenk / without support/ steering link mit Gummilager / with rubber mounting nur in Verbindung mit / Only in connection with:10161 ALL TYPES		**14466** **1H0 407 151** 10205 10203
Trag-/Führungsgelenk / Support-/ Steering Link mit Zubehör / With accessories für OE / for OE 191 407 151 B ALL TYPES		**10161** **357 407 365**
Lagerung, Lenker / Mounting, wishbone ALL TYPES	I12/A33	**10203** **357 407 182**

VOLKSWAGEN

GOLF IV Cabrio/Convertible (1E7) 06.98 -

Lagerung, Lenker / Mounting, wishbone ohne Montagehülsen / without mounting sleeve ALL TYPES		**10205**	**191 407 181 E**
Lagerung, Lenker / Mounting, wishbone mit Montagehülsen / with mounting sleeve ALL TYPES		**25352**	**191 407 181 E**
Lagerung, Stabilisatorkoppelstange **Mounting, stabilizer coupling rod** Pendelstange / Suspension Rod ALL TYPES		**17400**	**191 411 327**
Achskörperlager / Mounting, axle body ALL TYPES		**10222**	**1H0 501 541 A**
Achskörperlager / Mounting, axle body mit Zubehör / With accessories ALL TYPES		**27681**	**1H0 501 541 A**

VOLKSWAGEN

GOLF IV Variant/Estate/Break (1J5) 05.99 -

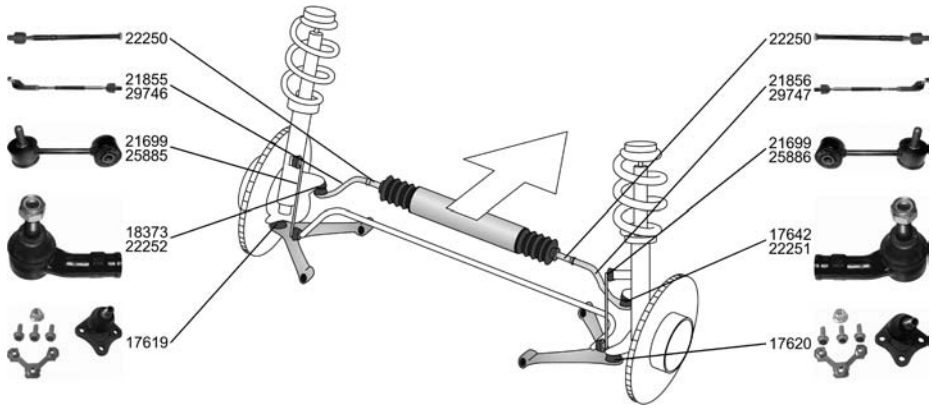

Spurstange / Tie Rod, steering			**21855** **1J0 422 803 B** 22250 22252
1.4 16V	05.99 -		
1.6	05.99 - 02.00		
1.6 16V	02.00 -		
1.6 FSI	01.02 -		
1.8 4motion	05.99 -		
1.8 T	05.00 -		
2.0	05.99 -		
2.0 4motion	10.00 -		
2.0 Bi-Fuel	02.02 -		
2.3 V5	05.99 - .		
2.3 V5 4motion	05.99 - .		
1.9 SDI	05.99 -		
1.9 TDI, 66 kW	05.99 - 06.01		
1.9 TDI 4motion, 66 kW	05.99 - 06.01		
1.9 TDI, 74 kW	09.00 -		
1.9 TDI 4motion, 74 kW	09.00 -		
1.9 TDI, 81 kW	05.99 - 06.01		
1.9 TDI, 85 kW	08.99 - 06.01		
1.9 TDI 4motion, 85 kW	05.99 - 06.01		
1.9 TDI, 96 kW	11.00 -		
1.9 TDI 4motion, 96 kW	11.00 -		
Spurstange / Tie Rod, steering			**21856** **1J0 422 804 B** 22250 22251
1.4 16V	05.99 -		
1.6	05.99 - 02.00		
1.6 16V	02.00 -		
1.6 FSI	01.02 -		
1.8 4motion	05.99 -		
1.8 T	05.00 -		
2.0	05.99 -		
2.0 4motion	10.00 -		
2.0 Bi-Fuel	02.02 -		
2.3 V5	05.99 - .		
2.3 V5 4motion	05.99 - .		
1.9 SDI	05.99 -		
1.9 TDI, 66 kW	05.99 - 06.01		
1.9 TDI 4motion, 66 kW	05.99 - 06.01		
1.9 TDI, 74 kW	09.00 -		
1.9 TDI 4motion, 74 kW	09.00 -		
1.9 TDI, 81 kW	05.99 - 06.01		
1.9 TDI, 85 kW	08.99 - 06.01		
1.9 TDI 4motion, 85 kW	05.99 - 06.01		
1.9 TDI, 96 kW	11.00 -		
1.9 TDI 4motion, 96 kW	11.00 -		
Spurstange / Tie Rod, steering			**29746** **1J0 422 803 E** 22250 18373
2.8 V6 4motion	05.99 -		
Spurstange / Tie Rod, steering			**29747** **1J0 422 804 E** 22250 17642
2.8 V6 4motion	05.99 -		
Spurstangenkopf / Tie-rod End Gewindeart: mit Rechtsgewinde / Thread Type: with right-hand thread mit Zubehör / With accessories			**17642** **3A0 422 812**
2.8 V6 4motion	05.99 -		

VOLKSWAGEN

GOLF IV Variant/Estate/Break (1J5) 05.99 -

Spurstangenkopf / Tie-rod End
Gewindeart: mit Rechtsgewinde / Thread Type: with right-hand thread
mit Zubehör / With accessories

18373 **3A0 422 811**

2.8 V6 4motion	05.99 -

Spurstangenkopf / Tie-rod End
Befestigungsart: hängend / Fastening Type: Suspended
Innengewinde [mm] / Inner Thread [mm]:M14x1,5
Gewindeart: mit Rechtsgewinde / Thread Type: with right-hand thread

22251 **1J0 422 812 B**

1.4 16V	05.99 -
1.6	05.99 - 02.00
1.6 16V	02.00 -
1.6 FSI	01.02 -
1.8 4motion	05.99 -
1.8 T	05.00 -
2.0	05.99 -
2.0 4motion	10.00 -
2.0 Bi-Fuel	02.02 -
2.3 V5	05.99 - .
2.3 V5 4motion	05.99 - .
1.9 SDI	05.99 -
1.9 TDI, 66 kW	05.99 - 06.01
1.9 TDI 4motion, 66 kW	05.99 - 06.01
1.9 TDI, 74 kW	09.00 -
1.9 TDI 4motion, 74 kW	09.00 -
1.9 TDI, 81 kW	05.99 - 06.01
1.9 TDI, 85 kW	08.99 - 06.01
1.9 TDI 4motion, 85 kW	05.99 - 06.01
1.9 TDI, 96 kW	11.00 -
1.9 TDI 4motion, 96 kW	11.00 -

Spurstangenkopf / Tie-rod End
Befestigungsart: hängend / Fastening Type: Suspended
Innengewinde [mm] / Inner Thread [mm]:M14x1,5
Gewindeart: mit Rechtsgewinde / Thread Type: with right-hand thread

22252 **1J0 422 811 B**

1.4 16V	05.99 -	Rohrdurchmesser am Sitz für Faltenbalg 15 mm (ZF-Lenkung) / Tube diameter at bellows seating 15 mm (ZF-steering)
1.6	05.99 - 02.00	
1.6 16V	02.00 -	
1.6 FSI	01.02 -	
1.8 4motion	05.99 -	
1.8 T	05.00 -	
2.0	05.99 -	
2.0 4motion	10.00 -	
2.0 Bi-Fuel	02.02 -	
2.3 V5	05.99 - .	
2.3 V5 4motion	05.99 - .	
1.9 SDI	05.99 -	
1.9 TDI, 66 kW	05.99 - 06.01	
1.9 TDI 4motion, 66 kW	05.99 - 06.01	
1.9 TDI, 74 kW	09.00 -	
1.9 TDI 4motion, 74 kW	09.00 -	
1.9 TDI, 81 kW	05.99 - 06.01	
1.9 TDI, 85 kW	08.99 - 06.01	
1.9 TDI 4motion, 85 kW	05.99 - 06.01	
1.9 TDI, 96 kW	11.00 -	
1.9 TDI 4motion, 96 kW	11.00 -	

Axialgelenk, Spurstange / Axial Rod, tie rod
ohne Zubehör / without accessories

22250 **1J0 422 807 B**

1.4 16V	05.99 -
1.6, 74 kW	05.99 - 02.00
2.0	05.99 -
2.8 V6 4motion	05.99 -
1.9 SDI	05.99 -
1.9 TDI, 66 kW	05.99 - 06.01
1.9 TDI 4motion, 66 kW	05.99 - 06.01
1.9 TDI, 81 kW	05.99 - 06.01
1.9 TDI, 85 kW	08.99 - 06.01

VOLKSWAGEN

GOLF IV Variant/Estate/Break (1J5) 05.99 -

Lenker, Radaufhängung / Track Control Arm
ohne Trag-/Führungsgelenk / without support/ steering link
mit Gummilager / with rubber mounting
nur in Verbindung mit / Only in connection with:17619
nur in Verbindung mit / Only in connection with:17620

22475 **1J0 407 151 C**
21113
10203

1.4 16V	05.99 -	
1.6	05.99 - 02.00	
1.6 16V	02.00 -	
1.6 FSI	01.02 -	
1.8 4motion	05.99 -	
2.0	05.99 -	
2.0 4motion	10.00 -	
2.0 Bi-Fuel	02.02 -	
2.3 V5, 110 kW	05.99 -	
2.3 V5 4motion, 110 kW	05.99 -	
2.8 V6 4motion	05.99 -	
1.9 SDI	05.99 -	
1.9 TDI, 66 kW	05.99 - 06.01	
1.9 TDI 4motion, 66 kW	05.99 - 06.01	
1.9 TDI, 74 kW	09.00 -	
1.9 TDI 4motion, 74 kW	09.00 -	
1.9 TDI, 81 kW	05.99 - 06.01	
1.9 TDI, 85 kW	08.99 - 06.01	
1.9 TDI 4motion, 85 kW	05.99 - 06.01	
1.9 TDI, 96 kW	11.00 -	
1.9 TDI 4motion, 96 kW	11.00 -	

Trag-/Führungsgelenk / Support-/ Steering Link
Flanschlochdurchmesser [mm] / Flange Hole Diameter [mm]:8,55

17619 **1J0 407 365 C**

ALL TYPES ausser/except for :		
1.8	05.99 -	
1.9 TDI, 110 kW	05.02 -	
1.9 TDI 4motion, 110 kW	05.02 -	

Trag-/Führungsgelenk / Support-/ Steering Link
Flanschlochdurchmesser [mm] / Flange Hole Diameter [mm]:8,55

17620 **1J0 407 366 C**

ALL TYPES ausser/except for :		
1.8	05.99 -	
1.9 TDI, 110 kW	05.02 -	
1.9 TDI 4motion, 110 kW	05.02 -	

Lagerung, Lenker / Mounting, wishbone I12/A33

10203 **357 407 182**

ALL TYPES ausser/except for :		
1.8	05.99 -	
1.9 TDI, 110 kW	05.02 -	
1.9 TDI 4motion, 110 kW	05.02 -	

Lagerung, Lenker / Mounting, wishbone I13/A60

21113 **1J0 407 181**

ALL TYPES ausser/except for :		
1.8	05.99 -	
1.9 TDI, 110 kW	05.02 -	
1.9 TDI 4motion, 110 kW	05.02 -	

Stange/Strebe, Stabilisator / Rod/Strut, stabiliser
Pendelstange / Suspension Rod
nur paarweise austauschen / Replace in pairs only

(x2)

21699 **1J0 411 315 G**

1.4 16V	05.99 -	Chass. 1J-1-480 001->
1.9 TDI, 85 kW	08.99 - 06.01	
1.6	05.99 - 02.00	
1.6 16V	02.00 -	
1.6 FSI	01.02 -	
2.0	05.99 -	
2.0 4motion	10.00 -	
2.0 Bi-Fuel	02.02 -	
2.3 V5, 110 kW	05.99 -	
1.9 SDI	05.99 -	
1.9 TDI, 66 kW	05.99 - 06.01	
1.9 TDI, 74 kW	09.00 -	
1.9 TDI 4motion, 74 kW	09.00 -	
1.9 TDI, 81 kW	05.99 - 06.01	
1.9 TDI 4motion, 85 kW	05.99 - 06.01	
1.9 TDI, 96 kW	11.00 -	

VOLKSWAGEN

GOLF IV Variant/Estate/Break (1J5) 05.99 -

Stange/Strebe, Stabilisator / Rod/Strut, stabiliser
Pendelstange / Suspension Rod

25885 **1J0 411 315 D**

1.8 4motion	05.99 -
2.0 4motion	10.00 -
2.3 V5 4motion, 110 kW	05.99 -
2.8 V6 4motion	05.99 -
1.9 TDI 4motion, 66 kW	05.99 - 06.01
1.9 TDI 4motion, 74 kW	09.00 -
1.9 TDI 4motion, 85 kW	05.99 - 06.01
1.9 TDI 4motion, 96 kW	11.00 -

Stange/Strebe, Stabilisator / Rod/Strut, stabiliser
Pendelstange / Suspension Rod

25886 **1J0 411 316 D**

1.8 4motion	05.99 -
2.0 4motion	10.00 -
2.3 V5 4motion, 110 kW	05.99 -
2.8 V6 4motion	05.99 -
1.9 TDI 4motion, 66 kW	05.99 - 06.01
1.9 TDI 4motion, 74 kW	09.00 -
1.9 TDI 4motion, 85 kW	05.99 - 06.01
1.9 TDI 4motion, 96 kW	11.00 -

Faltenbalgsatz, Lenkung / Bellow Kit, steering system

30177 **1J0 422 831 B**

1.4 16V	05.99 -
1.6	05.99 - 02.00
1.6 16V	02.00 -
1.6 FSI	01.02 -
1.8 4motion	05.99 -
2.0	05.99 -
2.0 4motion	10.00 -
2.0 Bi-Fuel	02.02 -
2.3 V5, 110 kW	05.99 -
2.3 V5 4motion, 110 kW	05.99 -
2.8 V6 4motion	05.99 -
1.9 SDI	05.99 -
1.9 TDI, 66 kW	05.99 - 06.01
1.9 TDI 4motion, 66 kW	05.99 - 06.01
1.9 TDI, 74 kW	09.00 -
1.9 TDI 4motion, 74 kW	09.00 -
1.9 TDI, 81 kW	05.99 - 06.01
1.9 TDI, 85 kW	08.99 - 06.01
1.9 TDI 4motion, 85 kW	05.99 - 06.01
1.9 TDI, 96 kW	11.00 -
1.9 TDI 4motion, 96 kW	11.00 -

Stange/Strebe, Stabilisator / Rod/Strut, stabiliser
Pendelstange / Suspension Rod
für Fahrzeuge ohne Schlechtwegeausführung / For vehicles without off-road suspension
mit Zubehör / With accessories

(x2)

21683 **1J0 505 466 B**

1.8 4motion	05.99 -
2.0 4motion	10.00 -
2.3 V5 4motion, 110 kW	05.99 -
2.8 V6 4motion	05.99 -
1.9 TDI 4motion, 66 kW	05.99 - 06.01
1.9 TDI 4motion, 74 kW	09.00 -
1.9 TDI 4motion, 85 kW	05.99 - 06.01
1.9 TDI 4motion, 96 kW	11.00 -

Stange/Strebe, Stabilisator / Rod/Strut, stabiliser
Pendelstange / Suspension Rod
für Fahrzeuge mit Schlechtwegeausführung / for vehicles with off-road suspension
mit Zubehör / With accessories

(x2)

21698 **1J0 505 466 C**

1.9 TDI 4motion, 66 kW	05.99 - 06.01
1.9 TDI 4motion, 85 kW	05.99 - 06.01

VOLKSWAGEN

GOLF IV Variant/Estate/Break (1J5) 05.99 -

Achskörperlager / Mounting, axle body
Hydrolager paarweise durch konventionelles Lager ersetzen. / change hydro bearing in pairs by conventional bearing

A71,40 | **21236** | **1J0 501 541 C**

1.4 16V	05.99 -
1.6	05.99 - 02.00
1.6 16V	02.00 -
1.6 FSI	01.02 -
1.8 T	05.00 -
2.0	05.99 -
2.0 Bi-Fuel	02.02 -
2.3 V5	05.99 - .
1.9 SDI	05.99 -
1.9 TDI, 66 kW	05.99 - 06.01
1.9 TDI, 74 kW	09.00 -
1.9 TDI, 81 kW	05.99 - 06.01
1.9 TDI, 85 kW	08.99 - 06.01
1.9 TDI, 96 kW	11.00 -

Achskörperlager / Mounting, axle body
mit Zubehör / With accessories

27627 | **1J0 501 541 C**

1.4 16V	05.99 -
1.6	05.99 - 02.00
1.6 16V	02.00 -
1.6 FSI	01.02 -
1.8 T	05.00 -
2.0	05.99 -
2.0 Bi-Fuel	02.02 -
2.3 V5	05.99 - .
1.9 SDI	05.99 -
1.9 TDI, 66 kW	05.99 - 06.01
1.9 TDI, 74 kW	09.00 -
1.9 TDI, 81 kW	05.99 - 06.01
1.9 TDI, 85 kW	08.99 - 06.01
1.9 TDI, 96 kW	11.00 -

GOLF V (1K1) 10.03 -

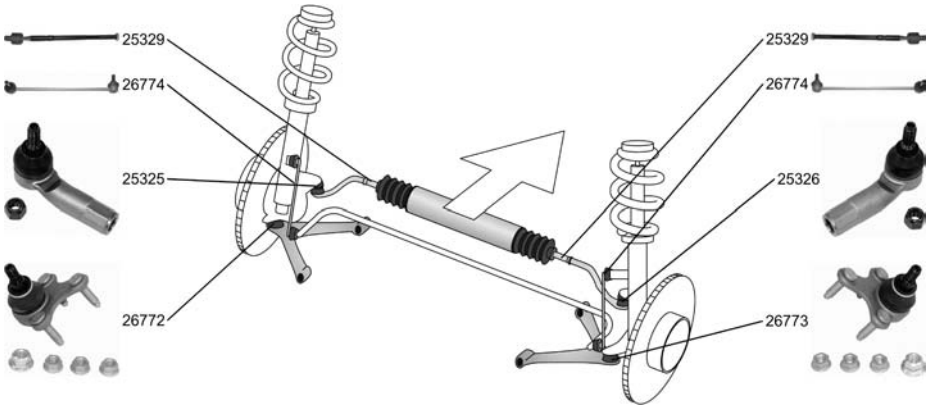

Spurstangenkopf / Tie-rod End
mit Zubehör / With accessories

25325 | **1K0 423 811 E**

1.4 16V, 55 kW	10.03 -
1.4 FSI, 66 kW	10.03 -
1.6	01.04 -
1.6 FSI	10.03 -
2.0 FSI	01.04 -
2.0 TDI, 103 kW	10.03 -
1.9 TDI, 77 kW	10.03 -
1.9 TDI, 66 kW	05.04 -
2.0 SDI	01.04 -

VOLKSWAGEN

GOLF V (1K1) 10.03 -

Spurstangenkopf / Tie-rod End mit Zubehör / With accessories			25326 1K0 423 812 E
1.4 16V, 55 kW	10.03 -		
1.4 FSI, 66 kW	10.03 -		
1.6	01.04 -		
1.6 FSI	10.03 -		
2.0 FSI	01.04 -		
2.0 TDI, 103 kW	10.03 -		
1.9 TDI, 77 kW	10.03 -		
1.9 TDI, 66 kW	05.04 -		
2.0 SDI	01.04 -		
Axialgelenk, Spurstange / Axial Rod, tie rod Betriebsart: elektrisch / Operating Mode: Electric			25329 1K0 423 810 A
1.4 16V, 55 kW	10.03 -		
1.4 FSI, 66 kW	10.03 -		
1.6	01.04 -		
1.6 FSI	10.03 -		
2.0 FSI	01.04 -		
2.0 TDI, 103 kW	10.03 -		
1.9 TDI, 77 kW	10.03 -		
1.9 TDI, 66 kW	05.04 -		
2.0 SDI	01.04 -		
Trag-/Führungsgelenk / Support-/ Steering Link			26772 1K0 407 365 C
1.4 16V, 55 kW	10.03 -		
1.4 FSI, 66 kW	10.03 -		
1.6	01.04 -		
1.6 FSI	10.03 -		
2.0 FSI	01.04 -		
2.0 TDI, 103 kW	10.03 -		
1.9 TDI, 77 kW	10.03 -		
1.9 TDI, 66 kW	05.04 -		
2.0 SDI	01.04 -		
Trag-/Führungsgelenk / Support-/ Steering Link			26773 1K0 407 366 C
1.4 16V, 55 kW	10.03 -		
1.4 FSI, 66 kW	10.03 -		
1.6	01.04 -		
1.6 FSI	10.03 -		
2.0 FSI	01.04 -		
2.0 TDI, 103 kW	10.03 -		
1.9 TDI, 77 kW	10.03 -		
1.9 TDI, 66 kW	05.04 -		
2.0 SDI	01.04 -		
Lagerung, Lenker / Mounting, wishbone			29916 1K0 407 182
1.4 16V, 55 kW	10.03 -		
1.4 FSI, 66 kW	10.03 -		
1.4 TSI	11.05 -		
1.6	01.04 -		
1.9 TDI	10.03 - .		
1.6 FSI	10.03 -		
2.0 FSI	01.04 -		
2.0 TDI, 100 kW	10.03 -		
2.0 TDI, 103 kW	10.03 -		
2.0 FSI 4motion	08.04 -		
2.0 GTI	10.04 -		
2.0 SDI	01.04 -		
1.9 TDI 4motion	08.04 -		
2.0 TDI 4motion	08.04 -		
Stange/Strebe, Stabilisator / Rod/Strut, stabiliser Pendelstange / Suspension Rod			26774 1K0 411 315 D
1.4 16V, 55 kW	10.03 -		
1.4 FSI, 66 kW	10.03 -		
1.6	01.04 -		
1.6 FSI	10.03 -		
2.0 FSI	01.04 -		
2.0 TDI, 103 kW	10.03 -		
1.9 TDI, 77 kW	10.03 -		
1.9 TDI, 66 kW	05.04 -		
2.0 SDI	01.04 -		

VOLKSWAGEN

GOLF V (1K1) 10.03 -

Lagerung, Spurstange / Mounting, track rod			**29314** **1K0 501 541 C**
1.4 16V, 55 kW	10.03 -		
1.4 FSI, 66 kW	10.03 -		
1.4 TSI	11.05 -		
1.6	01.04 -		
1.9 TDI	10.03 - .		
1.6 FSI	10.03 -		
2.0 FSI	01.04 -		
2.0 TDI, 103 kW	10.03 -		
2.0 FSI 4motion	08.04 -		
2.0 GTI	10.04 -		
2.0 SDI	01.04 -		
3.2 R32 4motion	11.05 -		
1.9 TDI 4motion	08.04 -		
2.0 TDI 4motion	08.04 -		
2.0 GTD	11.05 -		
Lagerung, Spurstange / Mounting, track rod			**29921** **1K0 505 543 A**
1.4 16V, 55 kW	10.03 -		
1.4 FSI, 66 kW	10.03 -		
1.4 TSI	11.05 -		
1.6	01.04 -		
1.9 TDI	10.03 - .		
1.6 FSI	10.03 -		
2.0 FSI	01.04 -		
2.0 TDI, 103 kW	10.03 -		
2.0 FSI 4motion	08.04 -		
2.0 GTI	10.04 -		
2.0 SDI	01.04 -		
3.2 R32 4motion	11.05 -		
1.9 TDI 4motion	08.04 -		
2.0 TDI 4motion	08.04 -		
2.0 GTD	11.05 -		
Lagerung, Lenker / Mounting, wishbone			**27306** **1K0 505 553**
ALL TYPES ausser/except for :			
1.4 16V, 59 kW	05.06 -		
1.4 FSI, 103 kW	05.06 -		
2.0 TDI, 100 kW	10.03 -		
Lagerung, Lenker / Mounting, wishbone			**29917** **1K0 505 171 C**
ALL TYPES ausser/except for :			
1.4 16V, 59 kW	05.06 -		
1.4 FSI, 103 kW	05.06 -		
2.0 TDI, 100 kW	10.03 -		
Lagerung, Lenker / Mounting, wishbone			**29918** **1K0 505 203 A**
ALL TYPES ausser/except for :			
1.4 16V, 59 kW	05.06 -		
1.4 FSI, 103 kW	05.06 -		
2.0 TDI, 100 kW	10.03 -		
Lagerung, Lenker / Mounting, wishbone			**29919** **1K0 505 279 A**
ALL TYPES ausser/except for :			
1.4 16V, 59 kW	05.06 -		
1.4 FSI, 103 kW	05.06 -		
2.0 TDI, 100 kW	10.03 -		
Lagerung, Lenker / Mounting, wishbone			**29920** **1K0 505 541 C**
1.4 16V, 55 kW	10.03 -		
1.4 FSI, 66 kW	10.03 -		
1.4 TSI	11.05 -		
1.6	01.04 -		
1.9 TDI	10.03 - .		
1.6 FSI	10.03 -		
2.0 FSI	01.04 -		
2.0 TDI, 103 kW	10.03 -		
2.0 FSI 4motion	08.04 -		
2.0 GTI	10.04 -		
2.0 SDI	01.04 -		
3.2 R32 4motion	11.05 -		
1.9 TDI 4motion	08.04 -		
2.0 TDI 4motion	08.04 -		
2.0 GTD	11.05 -		

VOLKSWAGEN

GOLF V (1K1) 10.03 -

Stange/Strebe, Stabilisator / Rod/Strut, stabiliser
Pendelstange / Suspension Rod
mit Zubehör / With accessories

26775 1K0 505 465 K

1.4 16V, 55 kW	10.03 -
1.4 FSI, 66 kW	10.03 -
1.6	01.04 -
1.6 FSI	10.03 -
2.0 FSI	01.04 -
2.0 TDI, 103 kW	10.03 -
1.9 TDI, 77 kW	10.03 -
1.9 TDI, 66 kW	05.04 -
2.0 SDI	01.04 -

GOLF V PLUS (5M1) 01.05 -

Lagerung, Lenker / Mounting, wishbone

29916 1K0 407 182

1.4 16V, 55 kW	01.05 -
1.6 FSI	01.05 -
1.9 TDI, 77 kW	01.05 -
2.0 TDI, 103 kW	01.05 -

Lagerung, Spurstange / Mounting, track rod

29314 1K0 501 541 C

1.4 16V, 55 kW	01.05 -
1.6	05.05 -
1.6 FSI	01.05 -
2.0 FSI	05.05 -
1.9 TDI	01.05 - .
2.0 TDI, 103 kW	01.05 -

Lagerung, Spurstange / Mounting, track rod

29921 1K0 505 543 A

1.4 16V, 55 kW	01.05 -
1.6	05.05 -
1.6 FSI	01.05 -
2.0 FSI	05.05 -
1.9 TDI	01.05 - .
2.0 TDI, 103 kW	01.05 -

Lagerung, Lenker / Mounting, wishbone

27306 1K0 505 553

1.4 16V, 55 kW	01.05 -
1.6	05.05 -
1.6 FSI	01.05 -
2.0 FSI	05.05 -
1.9 TDI	01.05 - .
2.0 TDI, 103 kW	01.05 -

Lagerung, Lenker / Mounting, wishbone

29917 1K0 505 171 C

1.4 16V, 55 kW	01.05 -
1.6 FSI	01.05 -
1.9 TDI, 77 kW	01.05 -
2.0 TDI, 103 kW	01.05 -

Lagerung, Lenker / Mounting, wishbone

29918 1K0 505 203 A

1.4 16V, 55 kW	01.05 -
1.6 FSI	01.05 -
1.9 TDI, 77 kW	01.05 -
2.0 TDI, 103 kW	01.05 -

Lagerung, Lenker / Mounting, wishbone

29919 1K0 505 279 A

1.4 16V, 55 kW	01.05 -
1.6 FSI	01.05 -
1.9 TDI, 77 kW	01.05 -
2.0 TDI, 103 kW	01.05 -

Lagerung, Lenker / Mounting, wishbone

29920 1K0 505 541 C

1.4 16V, 55 kW	01.05 -
1.6	05.05 -
1.6 FSI	01.05 -
2.0 FSI	05.05 -
1.9 TDI	01.05 - .
2.0 TDI, 103 kW	01.05 -

VOLKSWAGEN

JETTA II (19E, 1G2) 01.84 - 12.92

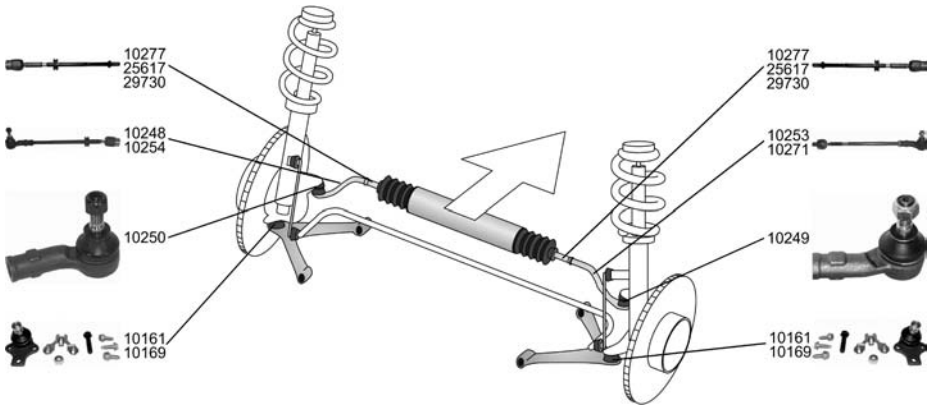

Spurstange / Tie Rod, steering mit Zubehör / With accessories		**10248** 191 419 803 10250
1.3	01.84 - 06.87	
1.3 KAT	06.87 - 12.91	
1.6, 51 kW	10.86 - 10.91	
1.6, 53 kW	03.86 - 10.91	
1.6, 55 kW	01.84 - 07.92	
1.8, 62 kW	08.86 - 01.90	
1.8, 66 kW	08.84 - 10.91	
1.8 KAT	01.87 - 10.91	
1.8 Syncro	08.87 - 07.91	
1.8, 79 kW	08.85 - 10.87	
1.8, 82 kW	01.84 - 10.91	
1.8 16V	08.86 - 10.91	
1.6 D	01.84 - 10.91	
1.6 TD	01.84 - 10.91	
Spurstange / Tie Rod, steering Befestigungsart: hängend / Fastening Type: Suspended für / for:TRW Rohrdurchmesser am Sitz für Faltenbalg 12,7 mm (TRW-Lenkung) / Tube diameter at bellows seating 12,7 mm (TRW-steering)		**10253** 191 422 804 A 29730 10249
1.3	01.84 - 06.87	
1.3 KAT	06.87 - 12.91	
1.6, 51 kW	10.86 - 10.91	
1.6, 53 kW	03.86 - 10.91	
1.6, 55 kW	01.84 - 07.92	
1.8, 62 kW	08.86 - 01.90	
1.8, 66 kW	08.84 - 10.91	
1.8 KAT	01.87 - 10.91	
1.8 Syncro	08.87 - 07.91	
1.8, 79 kW	08.85 - 10.87	
1.8, 82 kW	01.84 - 10.91	
1.8 16V	08.86 - 10.91	
1.6 D	01.84 - 10.91	
1.6 TD	01.84 - 10.91	
Spurstange / Tie Rod, steering Befestigungsart: hängend / Fastening Type: Suspended für / for:TRW Rohr-Ø [mm] / Pipe Ø [mm]:14 Achsausführung / Axle Version:TRW Rohrdurchmesser am Sitz für Faltenbalg 12,7 mm (TRW-Lenkung) / Tube diameter at bellows seating 12,7 mm (TRW-steering)		**10254** 191 422 803 A 29730 10250
1.3	01.84 - 06.87	
1.3 KAT	06.87 - 12.91	
1.6, 51 kW	10.86 - 10.91	
1.6, 53 kW	03.86 - 10.91	
1.6, 55 kW	01.84 - 07.92	
1.8, 62 kW	08.86 - 01.90	
1.8, 66 kW	08.84 - 10.91	
1.8 KAT	01.87 - 10.91	
1.8 Syncro	08.87 - 07.91	
1.8, 79 kW	08.85 - 10.87	
1.8, 82 kW	01.84 - 10.91	
1.8 16V	08.86 - 10.91	
1.6 D	01.84 - 10.91	
1.6 TD	01.84 - 10.91	

VOLKSWAGEN

JETTA II (19E, 1G2) 01.84 - 12.92

Spurstange / Tie Rod, steering
mit Zubehör / With accessories

10271 **191 419 804**
10249

1.3	01.84 - 06.87
1.3 KAT	06.87 - 12.91
1.6, 51 kW	10.86 - 10.91
1.6, 53 kW	03.86 - 10.91
1.6, 55 kW	01.84 - 07.92
1.8, 62 kW	08.86 - 01.90
1.8, 66 kW	08.84 - 10.91
1.8 KAT	01.87 - 10.91
1.8 Syncro	08.87 - 07.91
1.8, 79 kW	08.85 - 10.87
1.8, 82 kW	01.84 - 10.91
1.8 16V	08.86 - 10.91
1.6 D	01.84 - 10.91
1.6 TD	01.84 - 10.91

Spurstangenkopf / Tie-rod End
Befestigungsart: hängend / Fastening Type: Suspended
Konusmaß [mm] / Cone Size [mm]:14
Innengewinde [mm] / Inner Thread [mm]:M14x1,5
Gewindeart: mit Rechtsgewinde / Thread Type: with right-hand thread
mit Zubehör / With accessories
Gewindemaß / Thread Size:M14x1,5

10249 **191 419 812**

1.3	01.84 - 06.87
1.3	01.84 - 06.87

für / for:TRW

1.3 KAT	06.87 - 12.91
1.6, 51 kW	10.86 - 10.91
1.6, 53 kW	03.86 - 10.91
1.6, 55 kW	01.84 - 07.92
1.8, 62 kW	08.86 - 01.90
1.8, 66 kW	08.84 - 10.91
1.8 KAT	01.87 - 10.91
1.8 Syncro	08.87 - 07.91
1.8, 79 kW	08.85 - 10.87
1.8, 82 kW	01.84 - 10.91
1.8 16V	08.86 - 10.91
1.6 D	01.84 - 10.91
1.6 TD	01.84 - 10.91

Spurstangenkopf / Tie-rod End
Befestigungsart: hängend / Fastening Type: Suspended
Konusmaß [mm] / Cone Size [mm]:14
Innengewinde [mm] / Inner Thread [mm]:M14x1,5
Gewindeart: mit Rechtsgewinde / Thread Type: with right-hand thread
mit Zubehör / With accessories
Gewindemaß / Thread Size:M14x1,5

10250 **191 419 811**

1.3	01.84 - 06.87
1.3 KAT	06.87 - 12.91
1.6, 51 kW	10.86 - 10.91
1.6, 53 kW	03.86 - 10.91
1.6, 55 kW	01.84 - 07.92
1.8, 62 kW	08.86 - 01.90
1.8, 66 kW	08.84 - 10.91
1.8 KAT	01.87 - 10.91
1.8 Syncro	08.87 - 07.91
1.8, 79 kW	08.85 - 10.87
1.8, 82 kW	01.84 - 10.91
1.8 16V	08.86 - 10.91
1.6 D	01.84 - 10.91
1.6 TD	01.84 - 10.91

VOLKSWAGEN

JETTA II (19E, 1G2) 01.84 - 12.92

Axialgelenk, Spurstange / Axial Rod, tie rod
für / for:ZF
Gewindemaß / Thread Size:M22x1,5
Gewindeart: mit Rechtsgewinde / Thread Type: with right-hand thread
für OE / for OE 025 390 049 617 LH
Achsausführung / Axle Version:ZF

10277 **191 419 807 A**

1.3	01.84 - 06.87
1.3 KAT	06.87 - 12.91
1.6, 51 kW	10.86 - 10.91
1.6, 53 kW	03.86 - 10.91
1.6, 55 kW	01.84 - 07.92
1.8, 62 kW	08.86 - 01.90
1.8, 66 kW	08.84 - 10.91
1.8 KAT	01.87 - 10.91
1.8 Syncro	08.87 - 07.91
1.8, 79 kW	08.85 - 10.87
1.8, 82 kW	01.84 - 10.91
1.8 16V, 102 kW	06.87 - 12.89
1.6 D	01.84 - 10.91
1.6 TD	01.84 - 10.91

Axialgelenk, Spurstange / Axial Rod, tie rod
Rohrdurchmesser am Sitz für Faltenbalg 15 mm (ZF-Lenkung) / Tube diameter at bellows seating 15 mm (ZF-steering)

25617 **357 422 807 C**

1.3 KAT	06.87 - 12.91
1.6, 51 kW	10.86 - 10.91
1.6, 53 kW	03.86 - 10.91
1.8, 62 kW	08.86 - 01.90
1.8, 66 kW	08.84 - 10.91
1.8 KAT	01.87 - 10.91
1.8 16V, 95 kW	08.86 - 10.91
1.6 D	01.84 - 10.91
1.6 TD	01.84 - 10.91

Axialgelenk, Spurstange / Axial Rod, tie rod
für / for:TRW

29730 **191 422 807 A**

1.3	01.84 - 06.87
1.3 KAT	06.87 - 12.91
1.6, 51 kW	10.86 - 10.91
1.6, 53 kW	03.86 - 10.91
1.6, 55 kW	01.84 - 07.92
1.8, 62 kW	08.86 - 01.90
1.8, 66 kW	08.84 - 10.91
1.8 KAT	01.87 - 10.91
1.8 Syncro	08.87 - 07.91
1.8, 79 kW	08.85 - 10.87
1.8, 82 kW	01.84 - 10.91
1.8 16V	08.86 - 10.91
1.6 D	01.84 - 10.91
1.6 TD	01.84 - 10.91

Lenker, Radaufhängung / Track Control Arm
ohne Trag-/Führungsgelenk / without support/ steering link
mit Gummilager / with rubber mounting
nur in Verbindung mit / Only in connection with:10169/10161

10172 **191 407 151 B**
10203
10205

1.3	01.84 - 06.87
1.3 KAT	06.87 - 12.91
1.6, 51 kW	10.86 - 10.91
1.6, 53 kW	03.86 - 10.91
1.6, 55 kW	01.84 - 07.92
1.8, 62 kW	08.86 - 01.90
1.8, 66 kW	08.84 - 10.91
1.8 KAT	01.87 - 10.91
1.8 Syncro	08.87 - 07.91
1.8, 79 kW	08.85 - 10.87
1.8, 82 kW	01.84 - 10.91
1.8 16V	08.86 - 10.91
1.6 D	01.84 - 10.91
1.6 TD	01.84 - 10.91

VOLKSWAGEN

JETTA II (19E, 1G2) 01.84 - 12.92

Trag-/Führungsgelenk / Support-/ Steering Link mit Zubehör / With accessories für OE / for OE 191 407 151 B			**10161** **357 407 365**
1.3 KAT	06.87 - 12.91	08.1987->	
1.6, 51 kW	10.86 - 10.91	Chass. 19-J-000001->	
1.6, 53 kW	03.86 - 10.91		
1.6, 55 kW	01.84 - 07.92		
1.8, 62 kW	08.86 - 01.90		
1.8, 66 kW	08.84 - 10.91		
1.8, 79 kW	08.85 - 10.87		
1.8 KAT, 79 kW	01.87 - 10.91		
1.8, 82 kW	01.84 - 10.91		
1.8 16V	08.86 - 10.91		
1.6 D	01.84 - 10.91		
1.6 TD, 51 kW	01.84 - 10.91		
1.8 KAT, 66 kW	08.87 - 10.91		
1.8 Syncro	08.87 - 07.91		
1.6 TD, 44 kW	01.90 - 10.91		
1.6 TD, 59 kW	04.89 - 10.91		
Trag-/Führungsgelenk / Support-/ Steering Link mit Zubehör / With accessories mit Befestigungsmaterial / with fastening material		A17	**10169** **191 407 365**
1.3	01.84 - 06.87		
1.8 KAT, 66 kW	08.87 - 10.91		
1.6, 51 kW	10.86 - 10.91	->07.1987	
1.6, 55 kW	01.84 - 07.92	->Chass. 19-H-999999	
1.8, 62 kW	08.86 - 01.90		
1.8, 66 kW	08.84 - 10.91		
1.8, 79 kW	08.85 - 10.87		
1.8 KAT, 79 kW	01.87 - 10.91		
1.8, 82 kW	01.84 - 10.91		
1.8 16V, 102 kW	06.87 - 12.89		
1.6 D	01.84 - 10.91		
1.3 KAT	06.87 - 12.91	->07.1987	
1.6, 53 kW	03.86 - 10.91	->Chass. 19-H-999999	
1.8 16V, 95 kW	08.86 - 10.91		
1.3 KAT	06.87 - 12.91	->07.1987	
1.6, 53 kW	03.86 - 10.91	->Chass. 19-HB-990000	
1.8 16V, 95 kW	08.86 - 10.91		
1.6 TD, 51 kW	01.84 - 10.91	->07.1987 ->Chass. 19-H-999999	
1.6 TD, 51 kW	01.84 - 10.91		
Lagerung, Lenker / Mounting, wishbone		I12/A33	**10203** **357 407 182**
1.3	01.84 - 06.87		
1.3 KAT	06.87 - 12.91		
1.6, 51 kW	10.86 - 10.91		
1.6, 53 kW	03.86 - 10.91		
1.6, 55 kW	01.84 - 07.92		
1.8, 62 kW	08.86 - 01.90		
1.8, 66 kW	08.84 - 10.91		
1.8 KAT	01.87 - 10.91		
1.8 Syncro	08.87 - 07.91		
1.8, 79 kW	08.85 - 10.87		
1.8, 82 kW	01.84 - 10.91		
1.8 16V	08.86 - 10.91		
1.6 D	01.84 - 10.91		
1.6 TD	01.84 - 10.91		
Lagerung, Lenker / Mounting, wishbone ohne Montagehülsen / without mounting sleeve			**10205** **191 407 181 E**
1.3	01.84 - 06.87		
1.3 KAT	06.87 - 12.91		
1.6, 51 kW	10.86 - 10.91		
1.6, 53 kW	03.86 - 10.91		
1.6, 55 kW	01.84 - 07.92		
1.8, 62 kW	08.86 - 01.90		
1.8, 66 kW	08.84 - 10.91		
1.8 KAT	01.87 - 10.91		
1.8 Syncro	08.87 - 07.91		
1.8, 79 kW	08.85 - 10.87		
1.8, 82 kW	01.84 - 10.91		
1.8 16V	08.86 - 10.91		
1.6 D	01.84 - 10.91		
1.6 TD	01.84 - 10.91		

VOLKSWAGEN

JETTA II (19E, 1G2) 01.84 - 12.92

Lagerung, Lenker / Mounting, wishbone mit Montagehülsen / with mounting sleeve			**25352** **191 407 181 E**
1.3	01.84 - 06.87		
1.3 KAT	06.87 - 12.91		
1.6, 51 kW	10.86 - 10.91		
1.6, 53 kW	03.86 - 10.91		
1.6, 55 kW	01.84 - 07.92		
1.8, 62 kW	08.86 - 01.90		
1.8, 66 kW	08.84 - 10.91		
1.8 KAT	01.87 - 10.91		
1.8 Syncro	08.87 - 07.91		
1.8, 79 kW	08.85 - 10.87		
1.8, 82 kW	01.84 - 10.91		
1.8 16V	08.86 - 10.91		
1.6 D	01.84 - 10.91		
1.6 TD	01.84 - 10.91		
Stabilisatorlager / Mounting, Stabilizer		I17	**14341** **191 411 314**
1.3	01.84 - 06.87		
1.3 KAT	06.87 - 12.91		
1.6, 51 kW	10.86 - 10.91		
1.6, 53 kW	03.86 - 10.91		
1.6, 55 kW	01.84 - 07.92		
1.8, 62 kW	08.86 - 01.90		
1.8, 66 kW	08.84 - 10.91		
1.8 KAT	01.87 - 10.91		
1.8 Syncro	08.87 - 07.91		
1.8, 79 kW	08.85 - 10.87		
1.8, 82 kW	01.84 - 10.91		
1.8 16V	08.86 - 10.91		
1.6 D	01.84 - 10.91		
1.6 TD	01.84 - 10.91		
Stabilisatorlager / Mounting, Stabilizer		I19	**27461** **1H0 411 314**
1.3, 40 kW	01.84 - 06.87	Mot. MH Durchmesser Stabilisator [mm] / Stabilizer Diameter [mm]:21,5	
1.6, 51 kW	10.86 - 10.91	Durchmesser Stabilisator [mm] / Stabilizer Diameter [mm]:21,5	
1.6, 53 kW	03.86 - 10.91		
1.8, 62 kW	08.86 - 01.90		
1.8 KAT	01.87 - 10.91		
1.8 Syncro, 72 kW	08.88 - 07.91		
1.8, 79 kW	08.85 - 10.87		
1.8 16V	08.86 - 10.91		
1.6 TD, 44 kW	01.90 - 10.91		
1.6, 55 kW	01.84 - 07.92	Mot. EZ Durchmesser Stabilisator [mm] / Stabilizer Diameter [mm]:21,5	
1.8, 82 kW	01.84 - 10.91	Mot. PB Durchmesser Stabilisator [mm] / Stabilizer Diameter [mm]:21,5	
1.6 D	01.84 - 10.91	Mot. JP Durchmesser Stabilisator [mm] / Stabilizer Diameter [mm]:21,5	
1.6 TD, 51 kW	01.84 - 10.91	Mot. JR Durchmesser Stabilisator [mm] / Stabilizer Diameter [mm]:21,5	
1.6 TD, 59 kW	04.89 - 10.91	Mot. SB Durchmesser Stabilisator [mm] / Stabilizer Diameter [mm]:21,5	
1.3 KAT	06.87 - 12.91	Mot. NZ Durchmesser Stabilisator [mm] / Stabilizer Diameter [mm]:21,5	
1.8, 66 kW	08.84 - 10.91	Mot. GU Durchmesser Stabilisator [mm] / Stabilizer Diameter [mm]:21,5	

VOLKSWAGEN

JETTA II (19E, 1G2) 01.84 - 12.92

Lagerung, Stabilisatorkoppelstange **Mounting, stabilizer coupling rod** Pendelstange / Suspension Rod			**17400** **191 411 327**
1.3	01.84 - 06.87		
1.3 KAT	06.87 - 12.91		
1.6, 51 kW	10.86 - 10.91		
1.6, 53 kW	03.86 - 10.91		
1.6, 55 kW	01.84 - 07.92		
1.8, 62 kW	08.86 - 01.90		
1.8, 66 kW	08.84 - 10.91		
1.8 KAT	01.87 - 10.91		
1.8 Syncro	08.87 - 07.91		
1.8, 79 kW	08.85 - 10.87		
1.8, 82 kW	01.84 - 10.91		
1.8 16V	08.86 - 10.91		
1.6 D	01.84 - 10.91		
1.6 TD	01.84 - 10.91		
Faltenbalgsatz, Lenkung / Bellow Kit, steering system			**30111** **1H0 422 831 B**
1.3, 40 kW	01.84 - 06.87	Chass. 16-E-431 736 - Chass. 16-J-200 000	
1.6, 51 kW	10.86 - 10.91		
1.6, 53 kW	03.86 - 10.91		
1.6, 55 kW	01.84 - 07.92		
1.8, 62 kW	08.86 - 01.90		
1.8 KAT	01.87 - 10.91		
1.8, 82 kW	01.84 - 10.91		
1.8 16V	08.86 - 10.91		
1.6 D	01.84 - 10.91		
1.6 TD	01.84 - 10.91		
1.3, 40 kW	01.84 - 06.87	Chass. 1G-K-000 001 - Chass. 1G-K-990 000	
1.6, 51 kW	10.86 - 10.91		
1.6, 53 kW	03.86 - 10.91		
1.6, 55 kW	01.84 - 07.92		
1.8, 62 kW	08.86 - 01.90		
1.8 KAT	01.87 - 10.91		
1.8, 82 kW	01.84 - 10.91		
1.8 16V	08.86 - 10.91		
1.6 D	01.84 - 10.91		
1.6 TD	01.84 - 10.91		
1.8 Syncro, 72 kW	08.88 - 07.91	Chass. 19-G-000 001 - Chass. 1G-M-339 715	
1.3 KAT	06.87 - 12.91		
1.8 Syncro, 66 kW	08.87 - 12.88		
1.8, 79 kW	08.85 - 10.87		
1.3, 44 kW	01.84 - 10.86	für / for:TRW	
1.8, 66 kW	08.84 - 10.91		
Faltenbalgsatz, Lenkung / Bellow Kit, steering system			**30126** **357 422 831 B**
1.3 KAT	06.87 - 12.91	für / for:ZF Chass. 1G-L-000001->	
1.6, 51 kW	10.86 - 10.91		
1.6, 53 kW	03.86 - 10.91		
1.8, 62 kW	08.86 - 01.90		
1.8, 66 kW	08.84 - 10.91		
1.8 KAT	01.87 - 10.91		
1.8 16V, 95 kW	08.86 - 10.91		
1.6 D	01.84 - 10.91		
1.6 TD, 51 kW	01.84 - 10.91		
1.6 TD, 59 kW	04.89 - 10.91		
1.6 TD, 44 kW	01.90 - 10.91	für / for:ZF	
Achskörperlager / Mounting, axle body			**10196** **191 501 541**
1.3, 40 kW	01.84 - 06.87		
1.3 KAT	06.87 - 12.91		
1.6, 51 kW	10.86 - 10.91		
1.6, 53 kW	03.86 - 10.91		
1.6, 55 kW	01.84 - 07.92		
1.8, 62 kW	08.86 - 01.90		
1.8, 66 kW	08.84 - 10.91		
1.8 KAT	01.87 - 10.91		
1.8, 79 kW	08.85 - 10.87		
1.8, 82 kW	01.84 - 10.91		
1.8 16V	08.86 - 10.91		
1.6 D	01.84 - 10.91		
1.6 TD	01.84 - 10.91		

VOLKSWAGEN

JETTA II (19E, 1G2) 01.84 - 12.92

Achskörperlager / Mounting, axle body
mit Zubehör / With accessories

27680 191 501 541

1.3, 40 kW	01.84 - 06.87
1.3 KAT	06.87 - 12.91
1.6, 51 kW	10.86 - 10.91
1.6, 53 kW	03.86 - 10.91
1.6, 55 kW	01.84 - 07.92
1.8, 62 kW	08.86 - 01.90
1.8, 66 kW	08.84 - 10.91
1.8 KAT	01.87 - 10.91
1.8, 79 kW	08.85 - 10.87
1.8, 82 kW	01.84 - 10.91
1.8 16V	08.86 - 10.91
1.6 D	01.84 - 10.91
1.6 TD	01.84 - 10.91

JETTA III (1K2) 08.05 -

Spurstangenkopf / Tie-rod End
mit Zubehör / With accessories

25325 1K0 423 811 E

ALL TYPES ausser/except for :

2.0 TFSI	10.05 -

Spurstangenkopf / Tie-rod End
mit Zubehör / With accessories

25326 1K0 423 812 E

ALL TYPES ausser/except for :

2.0 TFSI	10.05 -

Axialgelenk, Spurstange / Axial Rod, tie rod
Betriebsart: elektrisch / Operating Mode: Electric

25329 1K0 423 810 A

ALL TYPES ausser/except for :

2.0 TFSI	10.05 -

Trag-/Führungsgelenk / Support-/ Steering Link

26772 1K0 407 365 C

ALL TYPES ausser/except for :

2.0 TFSI	10.05 -

Trag-/Führungsgelenk / Support-/ Steering Link

26773 1K0 407 366 C

ALL TYPES ausser/except for :

2.0 TFSI	10.05 -

Lagerung, Lenker / Mounting, wishbone

29916 1K0 407 182

ALL TYPES ausser/except for :

2.0 TFSI	10.05 -

Stange/Strebe, Stabilisator / Rod/Strut, stabiliser
Pendelstange / Suspension Rod

26774 1K0 411 315 D

ALL TYPES ausser/except for :

2.0 TFSI	10.05 -

Lagerung, Spurstange / Mounting, track rod

29314 1K0 501 541 C

ALL TYPES

VOLKSWAGEN

JETTA III (1K2) 08.05 -

Lagerung, Spurstange / Mounting, track rod			29921 1K0 505 543 A
ALL TYPES			
Lagerung, Lenker / Mounting, wishbone			29920 1K0 505 541 C
ALL TYPES			
Stange/Strebe, Stabilisator / Rod/Strut, stabiliser Pendelstange / Suspension Rod mit Zubehör / With accessories			26775 1K0 505 465 K
ALL TYPES ausser/except for :			
2.0 TFSI	10.05 -		

KAEFER 04.49 - 07.03

Spurstange / Tie Rod, steering Konusmaß [mm] / Cone Size [mm]:14 Rohr-Ø [mm] / Pipe Ø [mm]:18			10267 133 419 804 A
1303 1.6 (13)	08.72 - 12.79	Chass. 135-2000-001 - Chass. 159-2050-000	
Spurstange / Tie Rod, steering Konusmaß [mm] / Cone Size [mm]:14 Rohr-Ø [mm] / Pipe Ø [mm]:18 mit Zubehör / With accessories			13774 131 415 801 F
1200 1.2 (11)	01.60 - 12.85	Chass. 118 857 240->	
1300 1.3	08.65 - 07.70		
1300 1.3 (11), 29 kW	01.65 - 07.70		
1500 1.5 (11)	08.66 - 11.73		
1300 1.3 (11), 32 kW	01.70 - 01.73		
1500 1.6	07.70 - 01.73		
1302 1.3	08.70 - 07.75		
1302 1.3 (11)	08.70 - 08.72		
1302 1.6	07.71 - 07.74		
1600 (Mexico)	05.73 - 09.92		
1600 i (Mexico)	10.92 - 07.03		
Spurstange / Tie Rod, steering Konusmaß [mm] / Cone Size [mm]:14 Rohr-Ø [mm] / Pipe Ø [mm]:18 mit Zubehör / With accessories			13777 133 415 801
1303 1.6 (13)	08.72 - 12.79	Chass. 133-2000-001 - Chass. 134-2999-000	
1302 1.2 (11)	08.69 - 08.72		
1302 1.6 (11)	01.70 - 08.72		
1303 1.2 (13)	07.72 - 02.76		
1303 1.3 (13)	08.72 - 07.75		
1303 LS,S 1.6 (13)	08.72 - 12.79		

VOLKSWAGEN

KAEFER 04.49 - 07.03

Spurstangenkopf / Tie-rod End
Konusmaß [mm] / Cone Size [mm]:14
Gewindemaß / Thread Size:M14x1,5
Gewindeart: mit Rechtsgewinde / Thread Type: with right-hand thread
Aussengewinde [mm] / Outer Thread [mm]:M14x1,5

10252 **311 415 812 C**

1200 1.2 (11) 1300 1.3 1300 1.3 (11), 29 kW	01.60 - 12.85 08.65 - 07.70 01.65 - 07.70	Chass. 118 857 240->
1500 1.5 (11)	08.66 - 11.73	08.1968->
Chass. 118 857 240->
1300 1.3 (11), 32 kW 1500 1.6 1302 1.2 (11) 1302 1.3 1302 1.3 (11) 1302 1.6 1302 1.6 (11) 1303 1.2 (13) 1303 1.3 (13) 1303 1.6 (13) 1303 LS,S 1.6 (13) 1600 (Mexico) 1600 i (Mexico)	01.70 - 01.73 07.70 - 01.73 08.69 - 08.72 08.70 - 07.75 08.70 - 08.72 07.71 - 07.74 01.70 - 08.72 07.72 - 02.76 08.72 - 07.75 08.72 - 12.79 08.72 - 12.79 05.73 - 09.92 10.92 - 07.03	

Spurstangenkopf / Tie-rod End
Konusmaß [mm] / Cone Size [mm]:14
Gewindemaß / Thread Size:M14x1,5
Gewindeart: mit Linksgewinde / Thread Type: With left-hand thread
mit Zubehör / With accessories
Aussengewinde [mm] / Outer Thread [mm]:M14x1,5

10265 **131 415 813 E**

1200 1.2 (11) 1300 1.3 1300 1.3 (11), 29 kW 1500 1.5 (11)	01.60 - 12.85 08.65 - 07.70 01.65 - 07.70 08.66 - 11.73	Chass. 118 857 240->
1300 1.3 (11), 32 kW 1500 1.6 1302 1.3 1302 1.3 (11) 1302 1.6 1600 (Mexico) 1600 i (Mexico)	01.70 - 01.73 07.70 - 01.73 08.70 - 07.75 08.70 - 08.72 07.71 - 07.74 05.73 - 09.92 10.92 - 07.03	

Spurstangenkopf / Tie-rod End
Gewindemaß / Thread Size:M14x1,5
Gewindeart: mit Linksgewinde / Thread Type: With left-hand thread
Konusmaß [mm] / Cone Size [mm]:12
mit Zubehör / With accessories
Aussengewinde [mm] / Outer Thread [mm]:M14x1,5

13772 **113 415 813 D**

1200 1.2 (11) 1300 1.3 (11), 29 kW 1500 1.5 (11)	01.60 - 12.85 01.65 - 07.70 08.66 - 11.73	08.1965 - 07.1968
Chass. 116 000 001 - Chass. 118 857 239
1300 1.3	08.65 - 07.70	->07.1968
->Chass. 118 857 239
1300 1.3	08.65 - 07.70	->07.1968
Chass. 116 000 001 - Chass. 118 857 239

Spurstangenkopf / Tie-rod End
Konusmaß [mm] / Cone Size [mm]:12
Gewindemaß / Thread Size:M14x1,5
Gewindeart: mit Rechtsgewinde / Thread Type: with right-hand thread
Aussengewinde [mm] / Outer Thread [mm]:M14x1,5

13776 **131 415 812**

1.1 (Brezel) 1.2 (42005)	04.49 - 12.53 01.54 - 07.65	
1200 1.2 (11) 1300 1.3 1300 1.3 (11), 29 kW 1500 1.5 (11)	01.60 - 12.85 08.65 - 07.70 01.65 - 07.70 08.66 - 11.73	->Chass. 115 999 0000
1200 1.2 (11) 1300 1.3 1300 1.3 (11), 29 kW 1500 1.5 (11)	01.60 - 12.85 08.65 - 07.70 01.65 - 07.70 08.66 - 11.73	Chass. 116 000 001 - Chass. 118 857 239

VOLKSWAGEN

KAEFER 04.49 - 07.03

Spurstangenkopf / Tie-rod End Konusmaß [mm] / Cone Size [mm]:14 Gewindemaß / Thread Size:M14x1,5 Gewindeart: mit Linksgewinde / Thread Type: With left-hand thread Aussengewinde [mm] / Outer Thread [mm]:M14x1,5			**13789** **311 415 811 C**
1200 1.2 (11) 1300 1.3 1300 1.3 (11), 29 kW 1500 1.5 (11)	01.60 - 12.85 08.65 - 07.70 01.65 - 07.70 08.66 - 11.73	Chass. 118 857 240->	
1303 1.6 (13)	08.72 - 12.79	Chass. 133-2000-001 - Chass. 134-2999-000	
1302 1.2 (11) 1302 1.3 1302 1.3 (11) 1302 1.6 1302 1.6 (11) 1303 1.2 (13) 1303 1.3 (13) 1303 LS,S 1.6 (13)	08.69 - 08.72 08.70 - 07.75 08.70 - 08.72 07.71 - 07.74 01.70 - 08.72 07.72 - 02.76 08.72 - 07.75 08.72 - 12.79		
1300 1.3 (11), 32 kW 1500 1.6 1600 (Mexico) 1600 i (Mexico)	01.70 - 01.73 07.70 - 01.73 05.73 - 09.92 10.92 - 07.03		
Spurstangenkopf / Tie-rod End Konusmaß [mm] / Cone Size [mm]:12 Gewindemaß / Thread Size:M14x1,5 Gewindeart: mit Linksgewinde / Thread Type: With left-hand thread Aussengewinde [mm] / Outer Thread [mm]:M14x1,5			**16619** **131 415 811**
1.1 (Brezel) 1.2 (42005)	04.49 - 12.53 01.54 - 07.65		
1200 1.2 (11) 1300 1.3 1300 1.3 (11), 29 kW	01.60 - 12.85 08.65 - 07.70 01.65 - 07.70	->Chass. 115 999 000	
1200 1.2 (11) 1300 1.3 1300 1.3 (11), 29 kW	01.60 - 12.85 08.65 - 07.70 01.65 - 07.70	Chass. 116 000 001 - Chass. 118 857 239	
1500 1.5 (11)	08.66 - 11.73	->07.1968 Chass. 116 000 001 - Chass. 118 857 239	
1500 1.5 (11)	08.66 - 11.73	->Chass. 115 999 000	
Spurstangenkopf / Tie-rod End Konusmaß [mm] / Cone Size [mm]:12 Gewindemaß / Thread Size:M14x1,5 Gewindeart: mit Rechtsgewinde / Thread Type: with right-hand thread Aussengewinde [mm] / Outer Thread [mm]:M14x1,5			**16620**
1200 1.2 (11) 1300 1.3 (11), 29 kW 1500 1.5 (11)	01.60 - 12.85 01.65 - 07.70 08.66 - 11.73	08.1965 - 07.1968 Chass. 116 000 001 - Chass. 118 857 239	
1300 1.3	08.65 - 07.70	->07.1968 Chass. 116 000 001 - Chass. 118 857 239	
Trag-/Führungsgelenk / Support-/ Steering Link		38,3	**10158** **131 405 371 G**
1200 1.2 (11) 1300 1.3 (11), 29 kW	01.60 - 12.85 01.65 - 07.70	08.1965-> Chass. 116 000 001->	
1300 1.3 1300 1.3 (11), 32 kW 1500 1.5 (11) 1500 1.6 1302 1.6 1600 (Mexico) 1600 i (Mexico)	08.65 - 07.70 01.70 - 01.73 08.66 - 11.73 07.70 - 01.73 07.71 - 07.74 05.73 - 09.92 10.92 - 07.03		
Trag-/Führungsgelenk / Support-/ Steering Link			**10166** 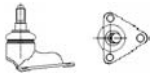
1302 1.2 (11) 1302 1.3 (11) 1302 1.6 (11)	08.69 - 08.72 08.70 - 08.72 01.70 - 08.72		
1302 1.3 1303 1.2 (13)	08.70 - 07.75 07.72 - 02.76	->06.1973	

VOLKSWAGEN

KAEFER 04.49 - 07.03

Trag-/Führungsgelenk / Support-/ Steering Link			38,3	**10167** **131 405 361 F**
1200 1.2 (11)	01.60 - 12.85	08.1965->		
1300 1.3 (11), 29 kW	01.65 - 07.70	Chass. 160 000 001->		
1300 1.3	08.65 - 07.70			
1300 1.3 (11), 32 kW	01.70 - 01.73			
1500 1.5 (11)	08.66 - 11.73			
1500 1.6	07.70 - 01.73			
1302 1.6	07.71 - 07.74			
1600 (Mexico)	05.73 - 09.92			
1600 i (Mexico)	10.92 - 07.03			
Trag-/Führungsgelenk / Support-/ Steering Link			37,3	**10168** **133 407 361**
1303 1.3 (13)	08.72 - 07.75	Chass. 133-3200-001->		
1303 1.6 (13)	08.72 - 12.79			
1303 LS,S 1.6 (13)	08.72 - 12.79			
Trag-/Führungsgelenk / Support-/ Steering Link			38,6	**16607**
1200 1.2 (11)	01.60 - 12.85	08.1965->		
1300 1.3 (11), 29 kW	01.65 - 07.70	Chass. 160 000 001->		
1300 1.3	08.65 - 07.70			
1300 1.3 (11), 32 kW	01.70 - 01.73			
1500 1.5 (11)	08.66 - 11.73			
1500 1.6	07.70 - 01.73			
1302 1.6	07.71 - 07.74			
1600 (Mexico)	05.73 - 09.92			
1600 i (Mexico)	10.92 - 07.03			
Lagerung, Lenker / Mounting, wishbone				**14320** **133 407 183**
1302 1.3	08.70 - 07.75			
1302 1.3 (11)	08.70 - 08.72			
1302 1.6	07.71 - 07.74			
1303 1.2 (13)	07.72 - 02.76			
1303 1.3 (13)	08.72 - 07.75			
1303 1.6 (13)	08.72 - 12.79			
1303 LS,S 1.6 (13)	08.72 - 12.79			
1302 1.2 (11)	08.69 - 08.72	08.1970->		
1302 1.6 (11)	01.70 - 08.72			

LT 28 I Bus/Familial (281-363) 04.75 - 06.96

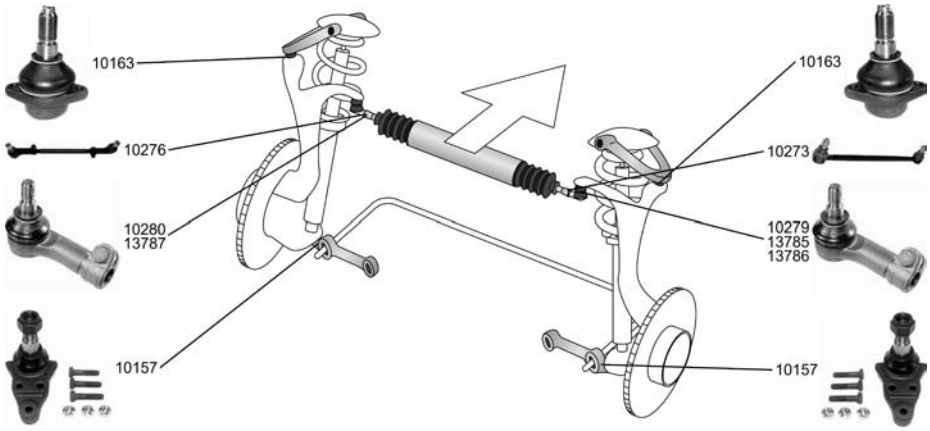

Spurstange / Tie Rod, steering für Fahrzeuge mit Schraubenfederung / for coil-spring suspension vehicles		**10247** **281 415 303 B**
ALL TYPES		
Spurstange / Tie Rod, steering für Fahrzeuge mit Blattfederung / for leaf-spring suspension vehicles		**10273** **281 415 802 A**
ALL TYPES		

VOLKSWAGEN

LT 28 I Bus/Familial (281-363) 04.75 - 06.96

Spurstange / Tie Rod, steering
für Fahrzeuge mit Schraubenfederung / for coil-spring suspension vehicles
ALL TYPES
10276 **281 415 801 D**

Spurstangenkopf / Tie-rod End
für Fahrzeuge mit Schraubenfederung / for coil-spring suspension vehicles
Gewindeart: mit Linksgewinde / Thread Type: With left-hand thread
ALL TYPES — Chass. 28-D-004 509->
10279 **281 415 801 D**

Spurstangenkopf / Tie-rod End
für Fahrzeuge mit Schraubenfederung / for coil-spring suspension vehicles
Gewindeart: mit Rechtsgewinde / Thread Type: with right-hand thread
ALL TYPES — Chass. 28-D-004 509->
10280 **281 415 801 D**

Spurstangenkopf / Tie-rod End
Konusmaß [mm] / Cone Size [mm]:16
Gewindemaß / Thread Size:M16x1,5
Gewindeart: mit Rechtsgewinde / Thread Type: with right-hand thread
Aussengewinde [mm] / Outer Thread [mm]:M16x1,5
Schubstange / Push Rod
ALL TYPES ausser/except for :
2.4 D, 55 kW 01.79 - 07.92
13785 **281 415 711 A**

Spurstangenkopf / Tie-rod End
für Fahrzeuge mit Schraubenfederung / for coil-spring suspension vehicles
Gewindeart: mit Linksgewinde / Thread Type: With left-hand thread

2.0	04.75 - 09.83	->Chass. 28-D-004508
2.4	12.82 - 07.92	
2.4 D, 55 kW	01.79 - 07.92	
2.4 TD, 75 kW	12.82 - 07.89	

13786 **281 415 811**

Spurstangenkopf / Tie-rod End
für Fahrzeuge mit Schraubenfederung / for coil-spring suspension vehicles
Konusmaß [mm] / Cone Size [mm]:16
Gewindemaß / Thread Size:M14x1,5
Gewindeart: mit Rechtsgewinde / Thread Type: with right-hand thread

2.0	04.75 - 09.83	->Chass. 28-D-004508
2.4	12.82 - 07.92	
2.4 D, 55 kW	01.79 - 07.92	
2.4 TD, 75 kW	12.82 - 07.89	

13787 **281 415 812**

Lenkstange / Centre Rod
längs / Longitudinal
Schubstange / Push Rod
für Fahrzeuge mit Schraubenfederung / for coil-spring suspension vehicles
ALL TYPES
10281 **281 415 701 E**

Trag-/Führungsgelenk / Support-/ Steering Link
mit Zubehör / With accessories
ALL TYPES
10157 **281 407 187 B**

Trag-/Führungsgelenk / Support-/ Steering Link
ALL TYPES
10163 **281 407 361**

Lagerung, Lenker / Mounting, wishbone I20/A38
ALL TYPES
10175 **281 407 077**

VOLKSWAGEN

LT 28 I Bus/Familial (281-363) 04.75 - 06.96

Lagerung, Lenker / Mounting, wishbone ALL TYPES		**14383** **281 407 183 C**
Stabilisatorlager / Mounting, Stabilizer ALL TYPES		**10207** **281 407 180**
Stabilisatorlager / Mounting, Stabilizer ALL TYPES		**10208** **281 407 179**

LT 28-35 I Kasten/Box/Furgón/Van (281-363) 04.75 - 06.96

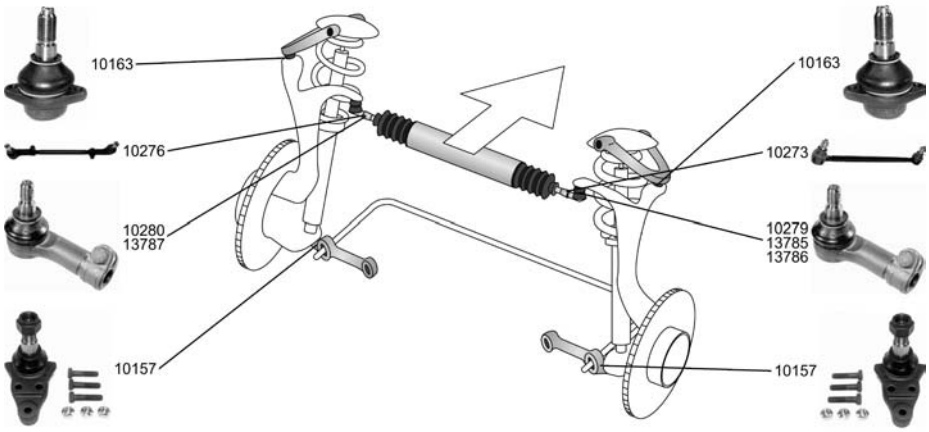

Spurstange / Tie Rod, steering für Fahrzeuge mit Schraubenfederung / for coil-spring suspension vehicles ALL TYPES		**10247** **281 415 303 B**
Spurstange / Tie Rod, steering für Fahrzeuge mit Blattfederung / for leaf-spring suspension vehicles ALL TYPES		**10273** **281 415 802 A**
Spurstange / Tie Rod, steering für Fahrzeuge mit Schraubenfederung / for coil-spring suspension vehicles ALL TYPES		**10276** **281 415 801 D**
Spurstangenkopf / Tie-rod End für Fahrzeuge mit Schraubenfederung / for coil-spring suspension vehicles Gewindeart: mit Linksgewinde / Thread Type: With left-hand thread ALL TYPES	Chass. 28-D-004 509->	**10279** **281 415 801 D**
Spurstangenkopf / Tie-rod End für Fahrzeuge mit Schraubenfederung / for coil-spring suspension vehicles Gewindeart: mit Rechtsgewinde / Thread Type: with right-hand thread ALL TYPES	Chass. 28-D-004 509->	**10280** **281 415 801 D**

VOLKSWAGEN

LT 28-35 I Kasten/Box/Furgón/Van (281-363) 04.75 - 06.96

Spurstangenkopf / Tie-rod End Konusmaß [mm] / Cone Size [mm]:16 Gewindemaß / Thread Size:M16x1,5 Gewindeart: mit Rechtsgewinde / Thread Type: with right-hand thread Aussengewinde [mm] / Outer Thread [mm]:M16x1,5 Schubstange / Push Rod			13785 281 415 711 A
ALL TYPES			
Spurstangenkopf / Tie-rod End für Fahrzeuge mit Schraubenfederung / for coil-spring suspension vehicles Gewindeart: mit Linksgewinde / Thread Type: With left-hand thread			13786 281 415 811
2.0	04.75 - 09.83	->Chass. 28-D-004508	
2.4	12.82 - 07.92		
2.4 D, 55 kW	01.79 - 07.92		
2.7 D	11.75 - 01.80		
Spurstangenkopf / Tie-rod End für Fahrzeuge mit Schraubenfederung / for coil-spring suspension vehicles Konusmaß [mm] / Cone Size [mm]:16 Gewindemaß / Thread Size:M14x1,5 Gewindeart: mit Rechtsgewinde / Thread Type: with right-hand thread			13787 281 415 812
2.0	04.75 - 09.83	->Chass. 28-D-004508	
2.4	12.82 - 07.92		
2.4 D, 55 kW	01.79 - 07.92		
2.7 D	11.75 - 01.80		
Lenkstange / Centre Rod längs / Longitudinal Schubstange / Push Rod für Fahrzeuge mit Schraubenfederung / for coil-spring suspension vehicles			10281 281 415 701 E
ALL TYPES			
Trag-/Führungsgelenk / Support-/ Steering Link mit Zubehör / With accessories			10157 281 407 187 B
ALL TYPES			
Trag-/Führungsgelenk / Support-/ Steering Link			10163 281 407 361
ALL TYPES			
Lagerung, Lenker / Mounting, wishbone		I20/A38	10175 281 407 077
ALL TYPES			
Lagerung, Lenker / Mounting, wishbone			14383 281 407 183 C
ALL TYPES			
Stabilisatorlager / Mounting, Stabilizer			10207 281 407 180
ALL TYPES			

VOLKSWAGEN

LT 28-35 I Kasten/Box/Furgón/Van (281-363) 04.75 - 06.96

Stabilisatorlager / Mounting, Stabilizer ALL TYPES		**10208** **281 407 179**

LT 28-35 I Pritsche,Fahrgestell / Flatbed,Chassis Cab (281-363) 04.75 - 06.96

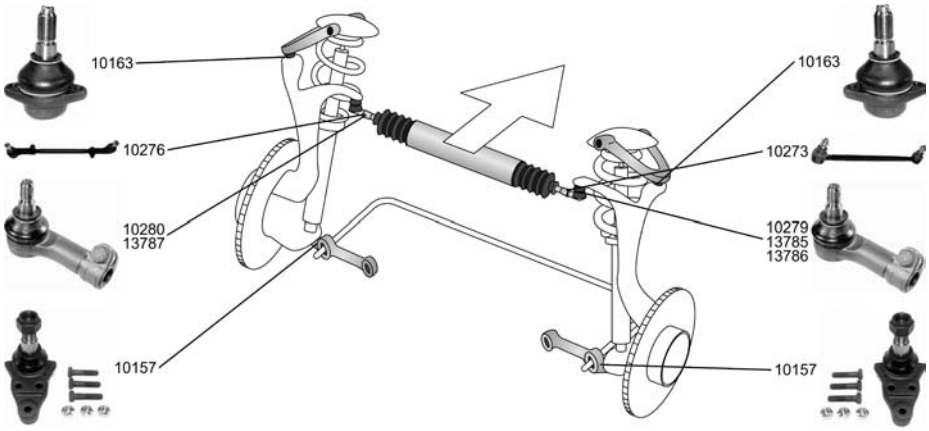

Spurstange / Tie Rod, steering für Fahrzeuge mit Schraubenfederung / for coil-spring suspension vehicles ALL TYPES ausser/except for : 2.0 04.75 - 09.83		**10247** **281 415 303 B**
Spurstange / Tie Rod, steering für Fahrzeuge mit Blattfederung / for leaf-spring suspension vehicles ALL TYPES ausser/except for : 2.0 04.75 - 09.83		**10273** **281 415 802 A**
Spurstange / Tie Rod, steering für Fahrzeuge mit Schraubenfederung / for coil-spring suspension vehicles ALL TYPES ausser/except for : 2.0 04.75 - 09.83		**10276** **281 415 801 D**
Spurstangenkopf / Tie-rod End für Fahrzeuge mit Schraubenfederung / for coil-spring suspension vehicles Gewindeart: mit Linksgewinde / Thread Type: With left-hand thread ALL TYPES ausser/except for : 2.0 04.75 - 09.83	Chass. 28-D-004 509->	**10279** **281 415 801 D**
Spurstangenkopf / Tie-rod End für Fahrzeuge mit Schraubenfederung / for coil-spring suspension vehicles Gewindeart: mit Rechtsgewinde / Thread Type: with right-hand thread ALL TYPES ausser/except for : 2.0 04.75 - 09.83	Chass. 28-D-004 509->	**10280** **281 415 801 D**
Spurstangenkopf / Tie-rod End Konusmaß [mm] / Cone Size [mm]:16 Gewindemaß / Thread Size:M16x1,5 Gewindeart: mit Rechtsgewinde / Thread Type: with right-hand thread Aussengewinde [mm] / Outer Thread [mm]:M16x1,5 Schubstange / Push Rod ALL TYPES ausser/except for : 2.0 04.75 - 09.83		**13785** **281 415 711 A**

VOLKSWAGEN

LT 28-35 I Pritsche,Fahrgestell / Flatbed,Chassis Cab (281-363) 04.75 - 06.96

Spurstangenkopf / Tie-rod End
für Fahrzeuge mit Schraubenfederung / for coil-spring suspension vehicles
Gewindeart: mit Linksgewinde / Thread Type: With left-hand thread

2.0	04.75 - 09.83	->Chass. 28-D-004508
2.4	12.82 - 07.92	
2.4 D, 55 kW	12.78 - 02.91	
2.4 TD, 75 kW	12.82 - 09.93	
2.7 D	11.75 - 01.80	

13786 281 415 811

Spurstangenkopf / Tie-rod End
für Fahrzeuge mit Schraubenfederung / for coil-spring suspension vehicles
Konusmaß [mm] / Cone Size [mm]:16
Gewindemaß / Thread Size:M14x1,5
Gewindeart: mit Rechtsgewinde / Thread Type: with right-hand thread

2.0	04.75 - 09.83	->Chass. 28-D-004508
2.4	12.82 - 07.92	
2.4 D, 55 kW	12.78 - 02.91	
2.4 TD, 75 kW	12.82 - 09.93	
2.7 D	11.75 - 01.80	

13787 281 415 812

Lenkstange / Centre Rod
längs / Longitudinal
Schubstange / Push Rod
für Fahrzeuge mit Schraubenfederung / for coil-spring suspension vehicles

ALL TYPES ausser/except for :
2.0 04.75 - 09.83

10281 281 415 701 E

Trag-/Führungsgelenk / Support-/ Steering Link
mit Zubehör / With accessories

ALL TYPES ausser/except for :
2.0 04.75 - 09.83

10157 281 407 187 B

Trag-/Führungsgelenk / Support-/ Steering Link

ALL TYPES ausser/except for :
2.0 04.75 - 09.83

10163 281 407 361

Lagerung, Lenker / Mounting, wishbone I20/A38

ALL TYPES ausser/except for :
2.0 04.75 - 09.83

10175 281 407 077

Lagerung, Lenker / Mounting, wishbone

ALL TYPES ausser/except for :
2.0 04.75 - 09.83

14383 281 407 183 C

Stabilisatorlager / Mounting, Stabilizer

ALL TYPES ausser/except for :
2.0 04.75 - 09.83

10207 281 407 180

Stabilisatorlager / Mounting, Stabilizer

ALL TYPES ausser/except for :
2.0 04.75 - 09.83

10208 281 407 179

VOLKSWAGEN

LT 40-55 I Kasten/Box/Furgón/Van (291-512) 04.75 - 06.96

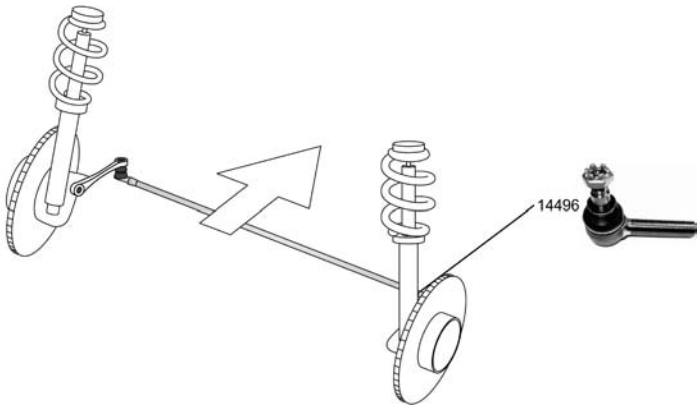

Spurstangenkopf / Tie-rod End Konusmaß [mm] / Cone Size [mm]:18 Gewindemaß / Thread Size:M18x1 Gewindeart: mit Rechtsgewinde / Thread Type: with right-hand thread Chass. 28-E-010 001-> Aussengewinde [mm] / Outer Thread [mm]:M18x1 Schubstange / Push Rod		**14496** **291 415 711 D**
2.4 4WD 12.82 - 07.92 2.4 D 4WD 01.79 - 03.86 2.4 TD 4WD 08.78 - 03.86	für OE / for OE 291 415 701 F	
Lenkstange / Centre Rod Schubstange / Push Rod für Fahrzeuge mit Blattfederung / for leaf-spring suspension vehicles	LHD	**10259** **291 415 701 E**
2.0 04.75 - 09.83 2.4 12.82 - 07.92 2.4 i 01.93 - 06.96 2.4 D 01.79 - 05.96 2.4 TD 02.86 - 05.96		
Lenkstange / Centre Rod Schubstange / Push Rod für Fahrzeuge mit Blattfederung / for leaf-spring suspension vehicles Konusmaß [mm] / Cone Size [mm]:18 Rohr-Ø [mm] / Pipe Ø [mm]:32	LHD	**22313** **291 415 711 F**
2.4 4WD 12.82 - 07.92 2.4 D 4WD 01.79 - 03.86 2.4 TD 4WD 08.78 - 03.86		
Trag-/Führungsgelenk / Support-/ Steering Link mit Zubehör / With accessories		**10157** **281 407 187 B**
ALL TYPES ausser/except for : 2.7 D 01.76 - 11.82		
Trag-/Führungsgelenk / Support-/ Steering Link		**10163** **281 407 361**
ALL TYPES ausser/except for : 2.7 D 01.76 - 11.82		
Lagerung, Lenker / Mounting, wishbone	I20/A38	**10175** **281 407 077**
ALL TYPES ausser/except for : 2.7 D 01.76 - 11.82		
Stabilisatorlager / Mounting, Stabilizer		**10207** **281 407 180**
ALL TYPES ausser/except for : 2.7 D 01.76 - 11.82		

VOLKSWAGEN

LT 40-55 I Kasten/Box/Furgón/Van (291-512) 04.75 - 06.96

Stabilisatorlager / Mounting, Stabilizer ALL TYPES ausser/except for : 2.7 D 01.76 - 11.82			**10208** **281 407 179**
Stabilisatorlager / Mounting, Stabilizer ALL TYPES ausser/except for : 2.7 D 01.76 - 11.82	12		**16612** **291 411 045**

LT 40-55 I Pritsche,Fahrgestell / Flatbed,Chassis Cab (293-909) 04.75 - 06.96

Lenkstange / Centre Rod Schubstange / Push Rod für Fahrzeuge mit Blattfederung / for leaf-spring suspension vehicles ALL TYPES ausser/except for : 2.7 D 01.76 - 11.82	LHD		**10259** **291 415 701 E**
Trag-/Führungsgelenk / Support-/ Steering Link mit Zubehör / With accessories ALL TYPES ausser/except for : 2.7 D 01.76 - 11.82			**10157** **281 407 187 B**
Trag-/Führungsgelenk / Support-/ Steering Link ALL TYPES ausser/except for : 2.7 D 01.76 - 11.82			**10163** **281 407 361**
Lagerung, Lenker / Mounting, wishbone ALL TYPES ausser/except for : 2.7 D 01.76 - 11.82	I20/A38		**10175** **281 407 077**
Stabilisatorlager / Mounting, Stabilizer ALL TYPES ausser/except for : 2.7 D 01.76 - 11.82			**10207** **281 407 180**
Stabilisatorlager / Mounting, Stabilizer ALL TYPES ausser/except for : 2.7 D 01.76 - 11.82			**10208** **281 407 179**
Stabilisatorlager / Mounting, Stabilizer ALL TYPES ausser/except for : 2.7 D 01.76 - 11.82	12		**16612** **291 411 045**

VOLKSWAGEN

LT 28-35 II Bus/Familial (2DM) 04.96 -

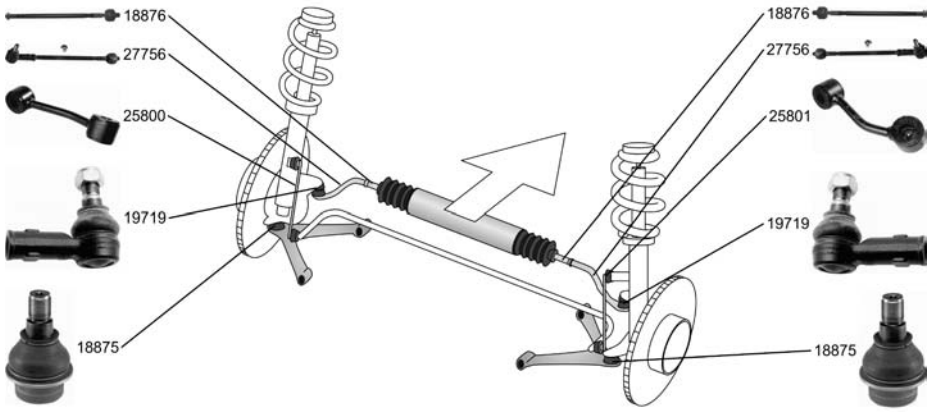

Spurstange / Tie Rod, steering mit Zubehör / With accessories nicht für Felgengröße [Zoll] / not for rim size [inches]:16 nicht für Tiefbettfelge / not for well base rim			**27756** 2D0 422 803 18876 19719
ALL TYPES ausser/except for : 2.8 TDI	07.97 - 01.02		
Spurstangenkopf / Tie-rod End mit Zubehör / With accessories			**19719** 2D0 422 811
ALL TYPES ausser/except for : 2.8 TDI	07.97 - 01.02		
Axialgelenk, Spurstange / Axial Rod, tie rod mit Zubehör / With accessories			**18876**
ALL TYPES ausser/except for : 2.8 TDI	07.97 - 01.02		
Trag-/Führungsgelenk / Support-/ Steering Link			**18875** 2D0 407 361 A
2.3	05.96 -	->Chass. 2D-3-033 000	
2.5 SDI	07.96 -		
2.5 TDI, 61 kW	05.01 -		
2.5 TDI, 66 kW	05.99 -		
2.5 TDI, 70 kW	05.01 -		
2.5 TDI, 80 kW	05.99 -		
2.5 TDI, 75 kW	05.96 - 08.99		
Stange/Strebe, Stabilisator / Rod/Strut, stabiliser Pendelstange / Suspension Rod			**25800** 2D0 411 051
ALL TYPES ausser/except for : 2.8 TDI	07.97 - 01.02		
Stange/Strebe, Stabilisator / Rod/Strut, stabiliser Pendelstange / Suspension Rod			**25801** 2D0 411 052
ALL TYPES ausser/except for : 2.8 TDI	07.97 - 01.02		
Stange/Strebe, Stabilisator / Rod/Strut, stabiliser Pendelstange / Suspension Rod			**25802** 2D0 511 329
ALL TYPES ausser/except for : 2.8 TDI	07.97 - 01.02		

VOLKSWAGEN

LT 28-46 II Kasten/Box/Furgón/Van (2DX0AE) 04.96 -

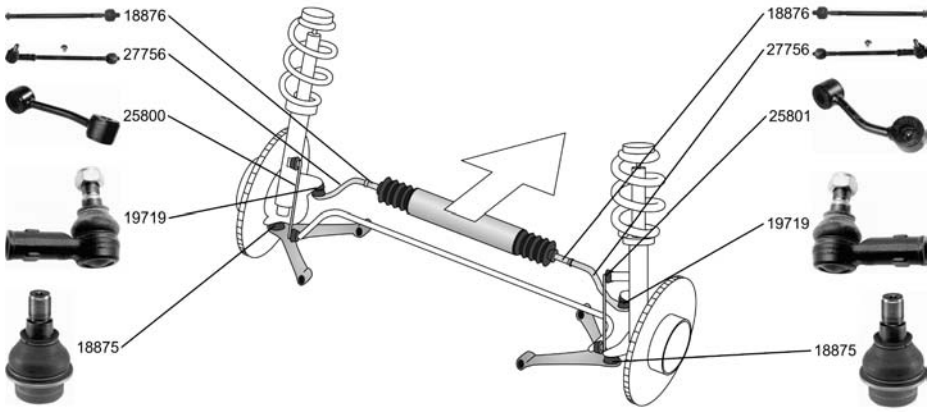

Spurstange / Tie Rod, steering mit Zubehör / With accessories nicht für Felgengröße [Zoll] / not for rim size [inches]:16 nicht für Tiefbettfelge / not for well base rim ALL TYPES		**27756** **2D0 422 803** 18876 19719
Spurstangenkopf / Tie-rod End mit Zubehör / With accessories ALL TYPES		**19719** **2D0 422 811**
Axialgelenk, Spurstange / Axial Rod, tie rod mit Zubehör / With accessories ALL TYPES		**18876**
Trag-/Führungsgelenk / Support-/ Steering Link		**18875** **2D0 407 361 A**
2.3 05.96 -	->Chass. 2D-3-033 000	
2.5 SDI 09.96 -		
2.5 TDI, 61 kW 05.01 -		
2.5 TDI, 66 kW 05.99 -		
2.5 TDI, 70 kW 05.01 -		
2.5 TDI, 80 kW 05.99 -		
2.8 TDI, 96 kW 01.99 -		
2.8 TDI, 116 kW 04.02 -		
2.5 TDI, 75 kW 05.96 - 08.99		
2.8 TDI, 92 kW 06.97 - 12.98		
Stange/Strebe, Stabilisator / Rod/Strut, stabiliser Pendelstange / Suspension Rod ALL TYPES		**25800** **2D0 411 051**
Stange/Strebe, Stabilisator / Rod/Strut, stabiliser Pendelstange / Suspension Rod ALL TYPES		**25801** **2D0 411 052**
Stange/Strebe, Stabilisator / Rod/Strut, stabiliser Pendelstange / Suspension Rod ALL TYPES	Nutzlast [kg] / Payload [kg]:2800-3500	**25802** **2D0 511 329**

VOLKSWAGEN

LT 28-46 II Kasten/Box/Furgón/Van (2DX0AE) 04.96 -

Stabilisatorlager / Mounting, Stabilizer		27	**20965** **2D0 511 413 B**
ALL TYPES ausser/except for :		Nutzlast [kg] / Payload [kg]:4600	
2.5 TDI, 61 kW	05.01 -		
2.5 TDI, 70 kW	05.01 -		
2.8 TDI, 116 kW	04.02 -		

LT 28-46 II Pritsche,Fahrgestell / Flatbed,Chassis Cab (2DX0FE) 04.96 -

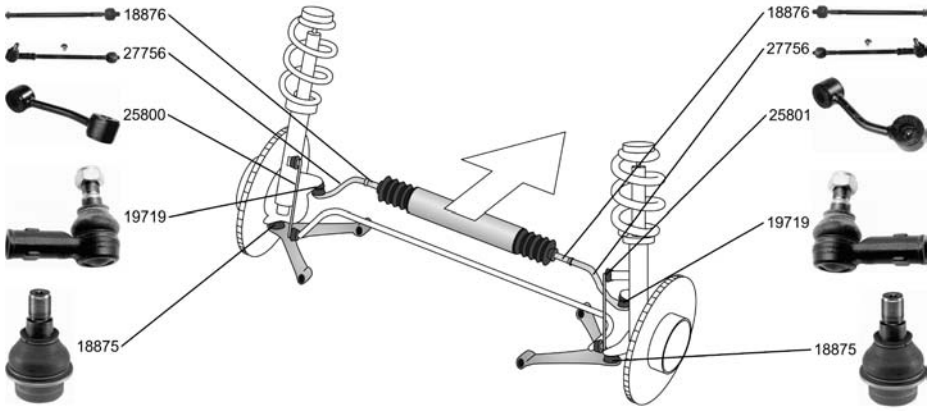

Spurstange / Tie Rod, steering mit Zubehör / With accessories nicht für Felgengröße [Zoll] / not for rim size [inches]:16 nicht für Tiefbettfelge / not for well base rim			**27756** **2D0 422 803** 18876 19719
ALL TYPES			
Spurstangenkopf / Tie-rod End mit Zubehör / With accessories			**19719** **2D0 422 811**
ALL TYPES			
Axialgelenk, Spurstange / Axial Rod, tie rod mit Zubehör / With accessories			**18876**
ALL TYPES			
Trag-/Führungsgelenk / Support-/ Steering Link			**18875** **2D0 407 361 A**
2.3	06.96 -	->Chass. 2D-3-033 000	
2.5 SDI	09.96 -		
2.5 TDI, 61 kW	05.01 -		
2.5 TDI, 66 kW	05.99 -		
2.5 TDI, 70 kW	05.01 -		
2.5 TDI, 80 kW	05.99 -		
2.8 TDI, 96 kW	01.99 -		
2.8 TDI, 116 kW	04.02 -		
2.5 TDI, 75 kW	06.96 - 08.99		
2.8 TDI, 92 kW	06.97 - 12.98		
Stange/Strebe, Stabilisator / Rod/Strut, stabiliser Pendelstange / Suspension Rod			**25800** **2D0 411 051**
ALL TYPES			

VOLKSWAGEN

LT 28-46 II Pritsche,Fahrgestell / Flatbed,Chassis Cab (2DX0FE) 04.96 -

Stange/Strebe, Stabilisator / Rod/Strut, stabiliser
Pendelstange / Suspension Rod

ALL TYPES

25801 **2D0 411 052**

Stange/Strebe, Stabilisator / Rod/Strut, stabiliser
Pendelstange / Suspension Rod

2.5 SDI	09.96 -	Nutzlast [kg] / Payload [kg]:4600
2.3	06.96 -	Nutzlast [kg] / Payload [kg]:2800-3500
2.5 TDI	06.96 - 08.99	
2.8 TDI	06.97 - 12.98	

25802 **2D0 511 329**

Stabilisatorlager / Mounting, Stabilizer 27

ALL TYPES ausser/except for :

2.5 TDI, 61 kW	05.01 -	Nutzlast [kg] / Payload [kg]:4600
2.5 TDI, 70 kW	05.01 -	
2.8 TDI, 116 kW	04.02 -	

20965 **2D0 511 413 B**

LUPO (6X1, 6E1) 09.98 -

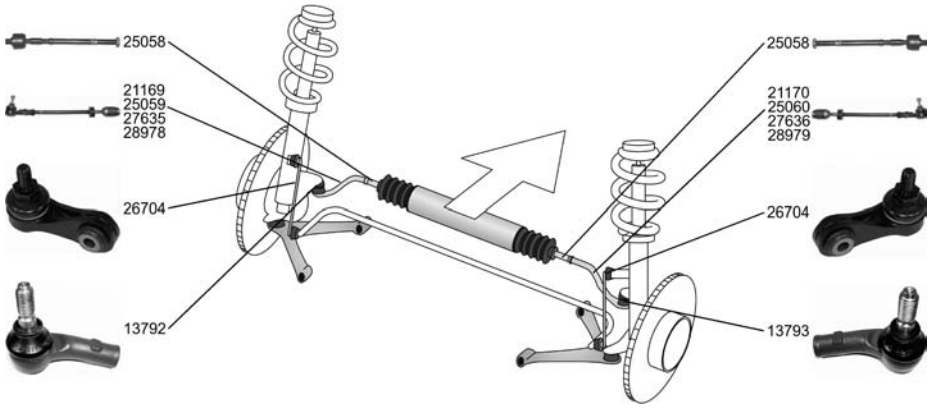

Spurstange / Tie Rod, steering
mit Zubehör / With accessories

ALL TYPES ausser/except for :

1.2 TDI 3L	07.99 -

21169

Spurstange / Tie Rod, steering
mit Zubehör / With accessories

ALL TYPES ausser/except for :

1.2 TDI 3L	07.99 -

21170 **6X0 419 804 A**

Spurstange / Tie Rod, steering
mit Zubehör / With accessories

1.0	09.98 -
1.4	10.00 -
1.4 16V, 55 kW	09.98 -
1.7 SDI	09.98 -

25059 **6X0 422 803**
24739
25058

Spurstange / Tie Rod, steering
mit Zubehör / With accessories

1.0	09.98 -
1.4	10.00 -
1.4 16V, 55 kW	09.98 -
1.7 SDI	09.98 -

25060 **6X0 422 804**
24740
25058

VOLKSWAGEN

LUPO (6X1, 6E1) 09.98 -

Spurstange / Tie Rod, steering
mit Zubehör / With accessories

1.4 16V, 74 kW	08.99 -
1.4 FSI	02.01 -

27635 **6N0 422 803 C**
24739
27319

Spurstange / Tie Rod, steering
mit Zubehör / With accessories

1.4 16V, 74 kW	08.99 -
1.4 FSI	02.01 -

27636 **6N0 422 804 C**
24740
27319

Spurstange / Tie Rod, steering

1.2 TDI 3L	07.99 -

28978 **6E0 419 803 A**
27320
24739

Spurstange / Tie Rod, steering

1.2 TDI 3L	07.99 -

28979 **6E0 419 804 A**
24740
27320

Spurstangenkopf / Tie-rod End
Konusmaß [mm] / Cone Size [mm]:14
Innengewinde [mm] / Inner Thread [mm]:M14x1,5
Gewindeart: mit Rechtsgewinde / Thread Type: with right-hand thread
mit Zubehör / With accessories

ALL TYPES ausser/except for :

1.2 TDI 3L	07.99 -

13792 **6N0 419 811**

Spurstangenkopf / Tie-rod End
Konusmaß [mm] / Cone Size [mm]:14
Innengewinde [mm] / Inner Thread [mm]:M14x1,5
Gewindeart: mit Rechtsgewinde / Thread Type: with right-hand thread
mit Zubehör / With accessories

ALL TYPES ausser/except for :

1.2 TDI 3L	07.99 -

13793 **6N0 419 812**

Axialgelenk, Spurstange / Axial Rod, tie rod

1.0	09.98 -
1.4	10.00 -
1.4 16V, 55 kW	09.98 -
1.7 SDI	09.98 -

25058 **6X0 422 807**

Axialgelenk, Spurstange / Axial Rod, tie rod
mit Zubehör / With accessories

1.4 16V, 74 kW	08.99 -
1.4 FSI	02.01 -

27319 **6N0 422 807 C**

Lenker, Radaufhängung / Track Control Arm
nur in Verbindung mit / Only in connection with:Lemförder 13790
nur in Verbindung mit / Only in connection with:Lemförder 13791
mit Gummilager / with rubber mounting
ohne Trag-/Führungsgelenk / without support/ steering link
ohne Befestigungsmaterial / without fastening material

ALL TYPES ausser/except for :

1.4 FSI	02.01 -
1.2 TDI 3L	07.99 -

27745 **6X0 407 151 A**
17355

Trag-/Führungsgelenk / Support-/ Steering Link
ohne Zubehör / without accessories

1.0	09.98 -
1.4	10.00 -
1.6 GTI	09.00 -
1.7 SDI	09.98 -
1.4 16V	09.98 - .
1.4 TDI	01.99 -

13790 **6N0 407 365 A**

VOLKSWAGEN

LUPO (6X1, 6E1) 09.98 -

Trag-/Führungsgelenk / Support-/ Steering Link ohne Zubehör / without accessories			13791 6N0 407 365
1.0	09.98 -		
1.4	10.00 -		
1.6 GTI	09.00 -		
1.7 SDI	09.98 -		
1.4 16V	09.98 - .		
1.4 TDI	01.99 -		
Lagerung, Lenker / Mounting, wishbone		I17/A61	17355 6N0 407 181
ALL TYPES			
Lagerung, Lenker / Mounting, wishbone		I17/A61	21413 6N0 407 182
ALL TYPES ausser/except for :			
1.4 16V, 74 kW	08.99 -		
1.4 FSI	02.01 -		
1.2 TDI 3L	07.99 -		
Stange/Strebe, Stabilisator / Rod/Strut, stabiliser Pendelstange / Suspension Rod			26704 6E0 411 315
1.4 FSI	02.01 -		
1.2 TDI 3L	07.99 -		
Faltenbalgsatz, Lenkung / Bellow Kit, steering system			30175 6N0 422 831
ALL TYPES ausser/except for :			
1.2 TDI 3L	07.99 -		
Faltenbalgsatz, Lenkung / Bellow Kit, steering system			30176 6N0 419 831
ALL TYPES ausser/except for :			
1.2 TDI 3L	07.99 -		
Faltenbalgsatz, Lenkung / Bellow Kit, steering system			30235 6E0 419 831
1.2 TDI 3L	07.99 -		
Achskörperlager / Mounting, axle body			21549 6N0 501 541 D
ALL TYPES			

VOLKSWAGEN

MULTIVAN T5 (7HM) 04.03 -

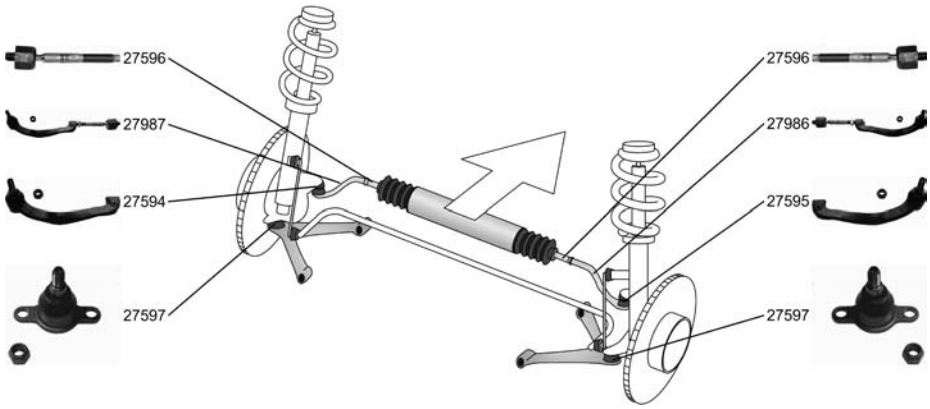

Spurstange / Tie Rod, steering Konusmaß [mm] / Cone Size [mm]:20 mit Befestigungsmaterial / with fastening material ALL TYPES		**27986** **7H0 419 804 D** 27595 27596
Spurstange / Tie Rod, steering Konusmaß [mm] / Cone Size [mm]:20 mit Befestigungsmaterial / with fastening material ALL TYPES		**27987** **7H0 419 803 D** 27594 27596
Spurstangenkopf / Tie-rod End Konusmaß [mm] / Cone Size [mm]:20 ALL TYPES		**27594** **7H0 422 817 C**
Spurstangenkopf / Tie-rod End Konusmaß [mm] / Cone Size [mm]:20 ALL TYPES		**27595** **7H0 422 818 C**
Axialgelenk, Spurstange / Axial Rod, tie rod ALL TYPES		**27596** **7H0 422 817 C** **7H0 422 818 C**
Trag-/Führungsgelenk / Support-/ Steering Link Konusmaß [mm] / Cone Size [mm]:22 ALL TYPES		**27597** **7H0 407 361**
Lagerung, Lenker / Mounting, wishbone zul. Gesamtgewicht [kg] / Gross Vehicle Weight [kg]:3000 2.0 04.03 - 3.2 V6, 170 kW 04.03 - 1.9 TDI 04.03 - 2.5 TDI 04.03 - .		**26936** **7H0 407 182 A**
Lagerung, Lenker / Mounting, wishbone 2.0 04.03 - 3.2 V6, 170 kW 04.03 - 1.9 TDI 04.03 - 2.5 TDI 04.03 - .		**26937** **7H0 407 183**

VOLKSWAGEN

NEW BEETLE (9C1, 1C1) 01.98 -

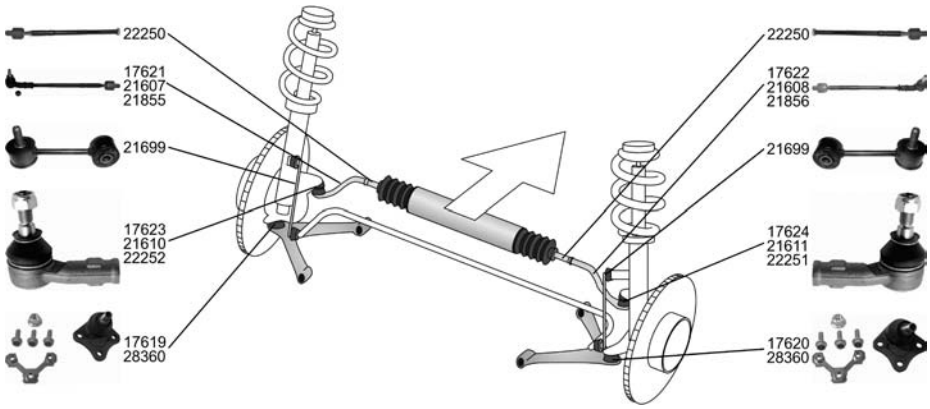

Spurstange / Tie Rod, steering mit Zubehör / With accessories			**17621** **1J0 422 803 A** 17623 22282
2.0 1.9 TDI, 66 kW	01.98 - 01.98 - 02.01	->Chass. 1C-W-047 124	
Spurstange / Tie Rod, steering mit Zubehör / With accessories			**17622** **1J0 422 804 A** 17624 22282
2.0 1.9 TDI, 66 kW	01.98 - 01.98 - 02.01	->Chass. 1C-W-047125	
Spurstange / Tie Rod, steering			**21607** 21610 21697
RSI 3.2 (1C9)	04.00 -	->05.2001 ->Chass. 9C-1-699 000	
RSI 3.2 (1C9)	04.00 -	->05.2001 ->Chass. 9C-1-169 000 ->Chass. 1C-1-499 000	
Spurstange / Tie Rod, steering			**21608** **8n0 422 804 C** 21611 21697
RSI 3.2 (1C9)	04.00 -	->05.2001 ->Chass. 9C-1-699 000	
RSI 3.2 (1C9)	04.00 -	->05.2001 ->Chass. 9C-1-169 000 ->Chass. 1C-1-499 000	
Spurstange / Tie Rod, steering			**21855** **1J0 422 803 B** 22250 22252
ALL TYPES ausser/except for : 2.0 1.9 TDI, 77 kW 1.4	 06.01 - 07.05 - 11.01 -	Chass. 1J-W-047 125->	
Spurstange / Tie Rod, steering			**21856** **1J0 422 804 B** 22250 22251
ALL TYPES ausser/except for : 2.0 1.9 TDI, 77 kW	 06.01 - 07.05 -	Chass. 1J-W047125->	
Spurstangenkopf / Tie-rod End Innengewinde [mm] / Inner Thread [mm]:M14x1,5 Gewindeart: mit Rechtsgewinde / Thread Type: with right-hand thread mit Zubehör / With accessories			**17623** **1J0 422 811 A**
2.0 1.9 TDI, 66 kW	01.98 - 01.98 - 02.01	->Chass. 1C-W-047125	
Spurstangenkopf / Tie-rod End Innengewinde [mm] / Inner Thread [mm]:M14x1,5 Gewindeart: mit Rechtsgewinde / Thread Type: with right-hand thread mit Zubehör / With accessories			**17624** **1J0 422 812 A**
2.0 1.9 TDI, 66 kW	01.98 - 01.98 - 02.01	->Chass. 1C-W-047125	

VOLKSWAGEN

NEW BEETLE (9C1, 1C1) 01.98 -

Spurstangenkopf / Tie-rod End Innengewinde [mm] / Inner Thread [mm]:M16x1,5 Gewindeart: mit Rechtsgewinde / Thread Type: with right-hand thread			**21610**
RSI 3.2 (1C9)	04.00 -	->05.2001 ->Chass. 9C-1-169 000 ->Chass. 1C-1-499 000	
Spurstangenkopf / Tie-rod End Innengewinde [mm] / Inner Thread [mm]:M16x1,5 Gewindeart: mit Rechtsgewinde / Thread Type: with right-hand thread			**21611**
RSI 3.2 (1C9)	04.00 -	->05.2001 ->Chass. 9C-1-169 000 ->Chass. 1C-1-499 000	
RSI 3.2 (1C9)	04.00 -		
Spurstangenkopf / Tie-rod End Befestigungsart: hängend / Fastening Type: Suspended Innengewinde [mm] / Inner Thread [mm]:M14x1,5 Gewindeart: mit Rechtsgewinde / Thread Type: with right-hand thread			**22251** **1J0 422 812 B**
2.0	01.98 -	Chass. 1J-W047125->	
1.9 TDI, 66 kW	01.98 - 02.01		
1.6	10.99 - 09.00		
1.8 T	10.99 -		
2.3 V5	10.00 -		
RSI 3.2 (1C9)	04.00 -		
1.9 TDI, 74 kW	02.01 -		
Spurstangenkopf / Tie-rod End Befestigungsart: hängend / Fastening Type: Suspended Innengewinde [mm] / Inner Thread [mm]:M14x1,5 Gewindeart: mit Rechtsgewinde / Thread Type: with right-hand thread			**22252** **1J0 422 811 B**
2.0	01.98 -	Chass. 1J-W047125->	
1.9 TDI, 66 kW	01.98 - 02.01	1J-W.. P (Mosel) D (Bratislava) B (Brüssel) W (Wolfsburg) / 1J-W.. P (Mosel) D (Bratislava) B (Brussels) W (Wolfsburg)	
1.6, 74 kW	10.99 - 09.00	06.1998-> Chass. 1C-W-047 125-> 1J-W.. P (Mosel) D (Bratislava) B (Brüssel) W (Wolfsburg) / 1J-W.. P (Mosel) D (Bratislava) B (Brussels) W (Wolfsburg)	
1.6, 75 kW	09.00 -	06.1998-> Chass. 1C-W-047 125->	
1.8 T	10.99 -		
2.3 V5	10.00 -		
1.9 TDI, 74 kW	02.01 -		
1.4	11.01 -		
RSI 3.2 (1C9)	04.00 -		
Axialgelenk, Spurstange / Axial Rod, tie rod ohne Zubehör / without accessories			**22250** **1J0 422 807 B**
2.0	01.98 -	Chass. 1J-W047125->	
1.9 TDI, 66 kW	01.98 - 02.01		
1.6, 74 kW	10.99 - 09.00		
Lenker, Radaufhängung / Track Control Arm ohne Trag-/Führungsgelenk / without support/ steering link mit Gummilager / with rubber mounting nur in Verbindung mit / Only in connection with:17619 nur in Verbindung mit / Only in connection with:17620			**22475** **1J0 407 151 C** 21113 10203
ALL TYPES ausser/except for :			
2.0	06.01 -		
RSI 3.2 (1C9)	04.00 -		
1.9 TDI, 77 kW	07.05 -		
Trag-/Führungsgelenk / Support-/ Steering Link Flanschlochdurchmesser [mm] / Flange Hole Diameter [mm]:8,55			**17619** **1J0 407 365 C**
ALL TYPES ausser/except for :			
2.0	06.01 -		
1.9 TDI, 77 kW	07.05 -		
RSI 3.2 (1C9)	04.00 -		

VOLKSWAGEN

NEW BEETLE (9C1, 1C1) 01.98 -

Trag-/Führungsgelenk / Support-/ Steering Link
Flanschlochdurchmesser [mm] / Flange Hole Diameter [mm]:8,55

ALL TYPES ausser/except for :		
2.0	06.01 -	
1.9 TDI, 77 kW	07.05 -	
RSI 3.2 (1C9)	04.00 -	

17620 — 1J0 407 366 C

Trag-/Führungsgelenk / Support-/ Steering Link
Konusmaß [mm] / Cone Size [mm]:20,24
mit Befestigungsmaterial / with fastening material

RSI 3.2 (1C9)	04.00 -

28360 — 8N0 407 365 C

Lagerung, Lenker / Mounting, wishbone — I12/A33

ALL TYPES ausser/except for :	
2.0	06.01 -
1.9 TDI, 77 kW	07.05 -

10203 — 357 407 182

Lagerung, Lenker / Mounting, wishbone — I13/A60

ALL TYPES ausser/except for :	
2.0	06.01 -
1.9 TDI, 77 kW	07.05 -
RSI 3.2 (1C9)	04.00 -

21113 — 1J0 407 181

Lagerung, Lenker / Mounting, wishbone

RSI 3.2 (1C9)	04.00 -	->12.2001

26606 — 8N0 407 182 A

Lagerung, Lenker / Mounting, wishbone

RSI 3.2 (1C9)	04.00 -	->12.2001

27132 — 8N0 407 181 B

Stange/Strebe, Stabilisator / Rod/Strut, stabiliser
Pendelstange / Suspension Rod
nur paarweise austauschen / Replace in pairs only

ALL TYPES ausser/except for :	
2.0	06.01 -
1.9 TDI, 77 kW	07.05 -
RSI 3.2 (1C9)	04.00 -

(x2)

21699 — 1J0 411 315 G

Faltenbalgsatz, Lenkung / Bellow Kit, steering system

1.6, 74 kW	10.99 - 09.00
1.8 T	10.99 -
2.0	01.98 -
1.9 TDI, 66 kW	01.98 - 02.01

30177 — 1J0 422 831 B

Stange/Strebe, Stabilisator / Rod/Strut, stabiliser
Pendelstange / Suspension Rod
für Fahrzeuge ohne Schlechtwegeausführung / For vehicles without off-road suspension
mit Zubehör / With accessories

(x2)

RSI 3.2 (1C9)	04.00 -	->Chass. 200105 ->Chass. 1C-1-499 000 ->Chass. 9C-1-169 000

21683 — 1J0 505 466 B

Achskörperlager / Mounting, axle body — A71,40
Hydrolager paarweise durch konventionelles Lager ersetzen. / change hydro bearing in pairs by conventional bearing

ALL TYPES ausser/except for :	
2.0	06.01 -
RSI 3.2 (1C9)	04.00 -
1.9 TDI, 77 kW	07.05 -

21236 — 1J0 501 541 C

VOLKSWAGEN

NEW BEETLE (9C1, 1C1) 01.98 -

Achskörperlager / Mounting, axle body
mit Zubehör / With accessories

ALL TYPES ausser/except for :	
2.0	06.01 -
RSI 3.2 (1C9)	04.00 -
1.9 TDI, 77 kW	07.05 -

27627 **1J0 501 541 C**

NEW BEETLE Cabrio/Convertible (1Y7) 01.03 -

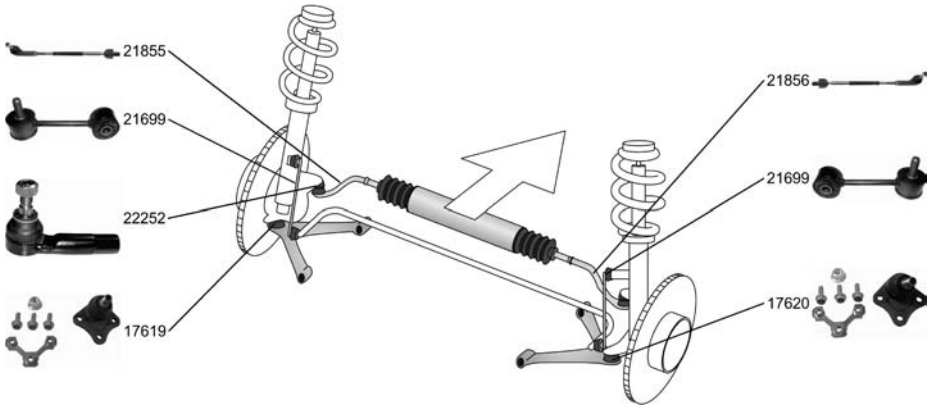

Spurstange / Tie Rod, steering

1.4	01.03 -
1.6	01.03 -
2.0	01.03 -
1.9 TDI, 74 kW	03.03 -

21855 **1J0 422 803 B**
22250
22252

Spurstange / Tie Rod, steering

1.4	01.03 -
1.6	01.03 -
2.0	01.03 -
1.9 TDI, 74 kW	03.03 -

21856 **1J0 422 804 B**
22250
22251

Spurstangenkopf / Tie-rod End
Befestigungsart: hängend / Fastening Type: Suspended
Innengewinde [mm] / Inner Thread [mm]:M14x1,5
Gewindeart: mit Rechtsgewinde / Thread Type: with right-hand thread

1.4	01.03 -
1.6	01.03 -
2.0	01.03 -
1.9 TDI, 74 kW	03.03 -

22252 **1J0 422 811 B**

Trag-/Führungsgelenk / Support-/ Steering Link
Flanschlochdurchmesser [mm] / Flange Hole Diameter [mm]:8,55

1.4	01.03 -
1.6	01.03 -
2.0	01.03 -
1.9 TDI, 74 kW	03.03 -

17619 **1J0 407 365 C**

Trag-/Führungsgelenk / Support-/ Steering Link
Flanschlochdurchmesser [mm] / Flange Hole Diameter [mm]:8,55

1.4	01.03 -
1.6	01.03 -
2.0	01.03 -
1.9 TDI, 74 kW	03.03 -

17620 **1J0 407 366 C**

Lagerung, Lenker / Mounting, wishbone I12/A33

ALL TYPES ausser/except for :	
1.9 TDI, 77 kW	07.05 -

10203 **357 407 182**

VOLKSWAGEN

NEW BEETLE Cabrio/Convertible (1Y7) 01.03 -

Lagerung, Lenker / Mounting, wishbone		I13/A60	**21113** **1J0 407 181**
ALL TYPES ausser/except for :			
1.9 TDI, 77 kW	07.05 -		
Stange/Strebe, Stabilisator / Rod/Strut, stabiliser Pendelstange / Suspension Rod nur paarweise austauschen / Replace in pairs only		(x2)	**21699** **1J0 411 315 G**
1.4	01.03 -		
1.6	01.03 -		
2.0	01.03 -		
1.9 TDI, 74 kW	03.03 -		
Achskörperlager / Mounting, axle body Hydrolager paarweise durch konventionelles Lager ersetzen. / change hydro bearing in pairs by conventional bearing		A71,40	**21236** **1J0 501 541 C**
1.4	01.03 -		
1.6	01.03 -		
2.0	01.03 -		
1.9 TDI, 74 kW	03.03 -		
Achskörperlager / Mounting, axle body mit Zubehör / With accessories			**27627** **1J0 501 541 C**
1.4	01.03 -		
1.6	01.03 -		
2.0	01.03 -		
1.9 TDI, 74 kW	03.03 -		

PASSAT (32B) 08.80 - 12.88

Spurstange / Tie Rod, steering			**10043** **811 419 802 K** 10143
1.3, 40 kW	08.80 - 07.83	LHD Chass. 32-H-150001->	
1.6, 51 kW	08.87 - 03.88		
1.6, 53 kW	02.86 - 03.88		
1.6, 55 kW	08.80 - 03.88		
1.8, 64 kW	05.86 - 03.88		
1.8, 66 kW	01.83 - 03.88		
1.8, 82 kW	12.83 - 03.88		
2.0	08.83 - 03.88		
2.2, 85 kW	08.85 - 03.88		
2.2, 100 kW	01.85 - 03.88		
1.6 D	08.80 - 03.88		
1.6 TD, 51 kW	04.82 - 03.88		
1.6 TD, 59 kW	05.86 - 03.88	LHD Chass. 32-H-150001->	
Spurstange / Tie Rod, steering		LHD	**10142** **811 419 802 J** 10143
1.3, 40 kW	08.80 - 07.83	Chass. 32-H-150000->	
1.6, 53 kW	02.86 - 03.88		
1.3, 44 kW, 1263 ccm	08.80 - 07.86		
1.6, 63 kW	01.81 - 02.83		
1.6, 51 kW	08.87 - 03.88	->Chass. 32-H-150000	
1.6, 55 kW	08.80 - 03.88		
1.8, 64 kW	05.86 - 03.88		
1.8, 66 kW	01.83 - 03.88		
1.8, 82 kW	12.83 - 03.88		
1.9	01.81 - 07.83		
2.0	08.83 - 03.88		
2.2, 85 kW	08.85 - 03.88		
2.2, 100 kW	01.85 - 03.88		
1.6 D	08.80 - 03.88		
1.6 TD	04.82 - 03.88		

VOLKSWAGEN

PASSAT (32B) 08.80 - 12.88

Spurstange / Tie Rod, steering
verstellbar / Adjustable

LHD

10145 **811 419 801 E**
10143
10143

1.3, 40 kW	08.80 - 07.83
1.3, 44 kW, 1263 ccm	08.80 - 07.86
1.6, 51 kW	08.87 - 03.88
1.6, 53 kW	02.86 - 03.88
1.6, 55 kW	08.80 - 03.88
1.6, 63 kW	01.81 - 02.83
1.8, 64 kW	05.86 - 03.88
1.8, 66 kW	01.83 - 03.88
1.8, 82 kW	12.83 - 03.88
1.9	01.81 - 07.83
2.0	08.83 - 03.88
2.2, 85 kW	08.85 - 03.88
2.2, 100 kW	01.85 - 03.88
1.6 D	08.80 - 03.88
1.6 TD	04.82 - 03.88

Spurstange / Tie Rod, steering
verstellbar / Adjustable

▲ RHD

13755 **812 419 801 A**
10143

1.3, 40 kW	08.80 - 07.83
1.3, 44 kW, 1263 ccm	08.80 - 07.86
1.6, 51 kW	08.87 - 03.88
1.6, 53 kW	02.86 - 03.88
1.6, 55 kW	08.80 - 03.88
1.6, 63 kW	01.81 - 02.83
1.8, 64 kW	05.86 - 03.88
1.8, 66 kW	01.83 - 03.88
1.8, 82 kW	12.83 - 03.88
1.9	01.81 - 07.83
2.0	08.83 - 03.88
2.2, 85 kW	08.85 - 03.88
2.2, 100 kW	01.85 - 03.88
1.6 D	08.80 - 03.88
1.6 TD	04.82 - 03.88

Spurstangenkopf / Tie-rod End
Innengewinde [mm] / Inner Thread [mm]:M14x1,5
Gewindeart: mit Rechtsgewinde / Thread Type: with right-hand thread

10143 **811 419 812 A**

1.3, 40 kW	08.80 - 07.83
1.3, 44 kW, 1263 ccm	08.80 - 07.86
1.6, 51 kW	08.87 - 03.88
1.6, 53 kW	02.86 - 03.88
1.6, 55 kW	08.80 - 03.88
1.6, 63 kW	01.81 - 02.83
1.8, 64 kW	05.86 - 03.88
1.8, 66 kW	01.83 - 03.88
1.8, 82 kW	12.83 - 03.88
1.9	01.81 - 07.83
2.0	08.83 - 03.88
2.2, 85 kW	08.85 - 03.88
2.2, 100 kW	01.85 - 03.88
1.6 D	08.80 - 03.88
1.6 TD	04.82 - 03.88

Trag-/Führungsgelenk / Support-/ Steering Link
Mit ovalen Flanschbohrungen / With oval flange boreholes

10148 **855 407 365 A**

1.3, 40 kW	08.80 - 07.83
1.3, 44 kW, 1263 ccm	08.80 - 07.86
1.6, 51 kW	08.87 - 03.88
1.6, 53 kW	02.86 - 03.88
1.6, 55 kW	08.80 - 03.88
1.6, 63 kW	01.81 - 02.83
1.8, 64 kW	05.86 - 03.88
1.8, 66 kW	01.83 - 03.88
1.8, 82 kW	12.83 - 03.88
1.9	01.81 - 07.83
2.0	08.83 - 03.88
2.2, 85 kW	08.85 - 03.88
2.2, 100 kW	01.85 - 03.88
1.6 D	08.80 - 03.88
1.6 TD	04.82 - 03.88

VOLKSWAGEN

PASSAT (32B) 08.80 - 12.88

Trag-/Führungsgelenk / Support-/ Steering Link Mit ovalen Flanschbohrungen / With oval flange boreholes			**10151** **855 407 366 A**
1.3, 40 kW	08.80 - 07.83		
1.3, 44 kW, 1263 ccm	08.80 - 07.86		
1.6, 51 kW	08.87 - 03.88		
1.6, 53 kW	02.86 - 03.88		
1.6, 55 kW	08.80 - 03.88		
1.6, 63 kW	01.81 - 02.83		
1.8, 64 kW	05.86 - 03.88		
1.8, 66 kW	01.83 - 03.88		
1.8, 82 kW	12.83 - 03.88		
1.9	01.81 - 07.83		
2.0	08.83 - 03.88		
2.2, 85 kW	08.85 - 03.88		
2.2, 100 kW	01.85 - 03.88		
1.6 D	08.80 - 03.88		
1.6 TD	04.82 - 03.88		
Trag-/Führungsgelenk / Support-/ Steering Link			**10153** **823 407 365 E**
1.3, 40 kW	08.80 - 07.83		
1.3, 44 kW, 1263 ccm	08.80 - 07.86		
1.6, 51 kW	08.87 - 03.88		
1.6, 53 kW	02.86 - 03.88		
1.6, 55 kW	08.80 - 03.88		
1.6, 63 kW	01.81 - 02.83		
1.8, 64 kW	05.86 - 03.88		
1.8, 66 kW	01.83 - 03.88		
1.8, 82 kW	12.83 - 03.88		
1.9	01.81 - 07.83		
2.0	08.83 - 03.88		
2.2, 85 kW	08.85 - 03.88		
2.2, 100 kW	01.85 - 03.88		
1.6 D	08.80 - 03.88		
1.6 TD, 51 kW	04.82 - 03.88		
1.6 TD, 59 kW	05.86 - 03.88		
Lagerung, Lenker / Mounting, wishbone		A38	**10125** **811 407 181 A**
1.3, 40 kW	08.80 - 07.83		
1.6, 63 kW	01.81 - 02.83		
1.3, 44 kW, 1263 ccm	08.80 - 07.86	->Chass. 85-D-079 180	
1.3, 44 kW, 1263 ccm	08.80 - 07.86	->12.1983 ->Chass. 32-E-150 000	
1.6, 51 kW	08.87 - 03.88		
1.6, 53 kW	02.86 - 03.88		
1.8, 82 kW	12.83 - 03.88		
2.0	08.83 - 03.88		
2.2, 85 kW	08.85 - 03.88		
2.2, 100 kW	01.85 - 03.88		
1.6 TD, 59 kW	05.86 - 03.88		
1.6, 55 kW	08.80 - 03.88		
1.8, 66 kW	01.83 - 03.88		
1.6 TD, 51 kW	04.82 - 03.88	->12.1983 ->Chass. 32-E-150 000	
1.6, 55 kW	08.80 - 03.88		
1.8, 66 kW	01.83 - 03.88		
1.6 TD, 51 kW	04.82 - 03.88		
1.8, 64 kW	05.86 - 03.88	->Chass. 85-D-079 180	
1.9	01.81 - 07.83	->12.1982 ->Chass. 32-D-099 298	
1.9	01.81 - 07.83		
1.6 D	08.80 - 03.88	->Chass. 85-D-079 180	
1.6 D	08.80 - 03.88	->12.1983 ->Chass. 32-E-150 000	

VOLKSWAGEN

PASSAT (32B) 08.80 - 12.88

Lagerung, Lenker / Mounting, wishbone

A37,5 — 10126 — 8A0 407 181

1.3, 40 kW	08.80 - 07.83
1.3, 44 kW, 1263 ccm	08.80 - 07.86
1.6, 51 kW	08.87 - 03.88
1.6, 53 kW	02.86 - 03.88
1.6, 55 kW	08.80 - 03.88
1.6, 63 kW	01.81 - 02.83
1.8, 64 kW	05.86 - 03.88
1.8, 66 kW	01.83 - 03.88
1.8, 82 kW	12.83 - 03.88
1.9	01.81 - 07.83
2.0	08.83 - 03.88
2.2, 85 kW	08.85 - 03.88
2.2, 100 kW	01.85 - 03.88
1.6 D	08.80 - 03.88
1.6 TD	04.82 - 03.88

Stabilisatorlager / Mounting, Stabilizer

I12,5 — 13760 — 823 411 313 A

1.3, 40 kW	08.80 - 07.83
1.3, 44 kW, 1263 ccm	08.80 - 07.86
1.6, 55 kW	08.80 - 03.88
1.6, 63 kW	01.81 - 02.83
1.8, 66 kW	01.83 - 03.88
1.6 D	08.80 - 03.88
1.6 TD, 51 kW	04.82 - 03.88
1.6, 51 kW	08.87 - 03.88
1.6, 53 kW	02.86 - 03.88
1.8, 64 kW	05.86 - 03.88
1.8, 82 kW	12.83 - 03.88
1.9	01.81 - 07.83
2.0	08.83 - 03.88
2.2, 85 kW	08.85 - 03.88
2.2, 100 kW	01.85 - 03.88

Faltenbalgsatz, Lenkung / Bellow Kit, steering system

30128 — 811 419 831 B

1.3, 40 kW	08.80 - 07.83
1.3, 44 kW, 1263 ccm	08.80 - 07.86
1.6, 51 kW	08.87 - 03.88
1.6, 53 kW	02.86 - 03.88
1.6, 55 kW	08.80 - 03.88
1.6, 63 kW	01.81 - 02.83
1.8, 64 kW	05.86 - 03.88
1.8, 66 kW	01.83 - 03.88
1.8, 82 kW	12.83 - 03.88
1.9	01.81 - 07.83
2.0	08.83 - 03.88
2.2, 85 kW	08.85 - 03.88
2.2, 100 kW	01.85 - 03.88
1.6 D	08.80 - 03.88
1.6 TD	04.82 - 03.88

Achskörperlager / Mounting, axle body

10193 — 321 501 541

1.3, 40 kW	08.80 - 07.83
1.3, 44 kW, 1263 ccm	08.80 - 07.86
1.6, 51 kW	08.87 - 03.88
1.6, 53 kW	02.86 - 03.88
1.6, 55 kW	08.80 - 03.88
1.6, 63 kW	01.81 - 02.83
1.8, 64 kW	05.86 - 03.88
1.8, 66 kW	01.83 - 03.88
1.8, 82 kW	12.83 - 03.88
1.9	01.81 - 07.83
2.0	08.83 - 03.88
2.2, 85 kW	08.85 - 03.88
2.2, 100 kW	01.85 - 03.88
1.6 D	08.80 - 03.88
1.6 TD	04.82 - 03.88

PASSAT Stufenheck/Saloon/avec coffre (32B) 01.85 - 03.88

Spurstange / Tie Rod, steering

10043 — 811 419 802 K

10143

ALL TYPES ausser/except for :

1.8, 64 kW	05.86 - 03.88

LHD

Chass. 32-H-150001->

VOLKSWAGEN

PASSAT Stufenheck/Saloon/avec coffre (32B) 01.85 - 03.88

Spurstange / Tie Rod, steering ALL TYPES ausser/except for : 1.8, 64 kW 05.86 - 03.88	LHD ->Chass. 32-H-150000	**10142** 10143	**811 419 802 J**
Spurstange / Tie Rod, steering verstellbar / Adjustable ALL TYPES ausser/except for : 1.8, 64 kW 05.86 - 03.88	LHD	**10145** 10143 10143	**811 419 801 E**
Spurstange / Tie Rod, steering verstellbar / Adjustable ALL TYPES ausser/except for : 1.8, 64 kW 05.86 - 03.88	RHD	**13755** 10143	**812 419 801 A**
Spurstangenkopf / Tie-rod End Innengewinde [mm] / Inner Thread [mm]:M14x1,5 Gewindeart: mit Rechtsgewinde / Thread Type: with right-hand thread ALL TYPES ausser/except for : 1.8, 64 kW 05.86 - 03.88		**10143**	**811 419 812 A**
Trag-/Führungsgelenk / Support-/ Steering Link Mit ovalen Flanschbohrungen / With oval flange boreholes ALL TYPES ausser/except for : 1.8, 64 kW 05.86 - 03.88		**10148**	**855 407 365 A**
Trag-/Führungsgelenk / Support-/ Steering Link Mit ovalen Flanschbohrungen / With oval flange boreholes ALL TYPES ausser/except for : 1.8, 64 kW 05.86 - 03.88		**10151**	**855 407 366 A**
Trag-/Führungsgelenk / Support-/ Steering Link ALL TYPES ausser/except for : 1.8, 64 kW 05.86 - 03.88		**10153**	**823 407 365 E**
Lagerung, Lenker / Mounting, wishbone ALL TYPES ausser/except for : 1.8, 64 kW 05.86 - 03.88	A38	**10125**	**811 407 181 A**
Lagerung, Lenker / Mounting, wishbone ALL TYPES ausser/except for : 1.8, 64 kW 05.86 - 03.88	A37,5	**10126**	**8A0 407 181**
Stabilisatorlager / Mounting, Stabilizer ALL TYPES ausser/except for : 1.8, 64 kW 05.86 - 03.88	I12,5	**13760**	**823 411 313 A**
Faltenbalgsatz, Lenkung / Bellow Kit, steering system ALL TYPES ausser/except for : 1.8, 64 kW 05.86 - 03.88		**30128**	**811 419 831 B**

VOLKSWAGEN

PASSAT Stufenheck/Saloon/avec coffre (32B) 01.85 - 03.88

Achskörperlager / Mounting, axle body			**10193** **321 501 541**
ALL TYPES ausser/except for :			
1.8, 64 kW	05.86 - 03.88		

PASSAT Variant/Estate/Break (32B) 08.80 - 06.89

Spurstange / Tie Rod, steering			**10043** **811 419 802 K** 10143
1.3, 44 kW, 1263 ccm	08.80 - 07.86	LHD Chass. 32-H-150001->	
1.6, 51 kW	08.87 - 03.88		
1.6, 53 kW	02.86 - 03.88		
1.6, 55 kW	08.80 - 03.88		
1.8, 64 kW	05.86 - 03.88		
1.8, 66 kW	01.83 - 03.88		
2.0	08.83 - 03.88		
2.2, 85 kW	08.85 - 03.88		
2.2, 100 kW	01.85 - 03.88		
1.6 D	08.80 - 03.88		
1.8 Syncro	01.86 - 03.88	LHD	
2.2 Syncro	08.85 - 03.88		
1.6 TD	04.82 - 03.88	LHD Chass. 32-H-150001->	
1.8, 82 kW	12.83 - 03.88	LHD Chass. 32-H-150001->	
2.0 Syncro	05.84 - 03.88		
Spurstange / Tie Rod, steering		LHD	**10142** **811 419 802 J** 10143
1.3, 40 kW	08.80 - 07.83	->Chass. 32-H-150000	
1.3, 44 kW, 1263 ccm	08.80 - 07.86		
1.6, 51 kW	08.87 - 03.88		
1.6, 53 kW	02.86 - 03.88		
1.6, 55 kW	08.80 - 03.88		
1.8, 64 kW	05.86 - 03.88		
1.8, 66 kW	01.83 - 03.88		
1.8, 82 kW	12.83 - 03.88		
2.0	08.83 - 03.88		
2.2, 85 kW	08.85 - 03.88		
2.2, 100 kW	01.85 - 03.88		
1.6 D	08.80 - 03.88		
1.6 TD	04.82 - 03.88		
1.6, 63 kW	01.81 - 02.83		
1.9	01.81 - 07.83		
Spurstange / Tie Rod, steering verstellbar / Adjustable		LHD	**10145** **811 419 801 E** 10143 10143
1.3, 40 kW	08.80 - 07.83		
1.3, 44 kW, 1263 ccm	08.80 - 07.86		
1.6, 51 kW	08.87 - 03.88		
1.6, 53 kW	02.86 - 03.88		
1.6, 55 kW	08.80 - 03.88		
1.6, 63 kW	01.81 - 02.83		
1.8, 64 kW	05.86 - 03.88		
1.8, 66 kW	01.83 - 03.88		
1.8, 82 kW	12.83 - 03.88		
1.9	01.81 - 07.83		
2.0	08.83 - 03.88		
2.2, 85 kW	08.85 - 03.88		
2.2, 100 kW	01.85 - 03.88		
1.6 D	08.80 - 03.88		
1.6 TD	04.82 - 03.88		

VOLKSWAGEN

PASSAT Variant/Estate/Break (32B) 08.80 - 06.89

Spurstange / Tie Rod, steering verstellbar / Adjustable		RHD	**13755** 10143 **812 419 801 A**
1.3, 40 kW	08.80 - 07.83		
1.3, 44 kW, 1263 ccm	08.80 - 07.86		
1.6, 51 kW	08.87 - 03.88		
1.6, 53 kW	02.86 - 03.88		
1.6, 55 kW	08.80 - 03.88		
1.6, 63 kW	01.81 - 02.83		
1.8, 64 kW	05.86 - 03.88		
1.8, 66 kW	01.83 - 03.88		
1.8, 82 kW	12.83 - 03.88		
1.9	01.81 - 07.83		
2.0	08.83 - 03.88		
2.2, 85 kW	08.85 - 03.88		
2.2, 100 kW	01.85 - 03.88		
1.6 D	08.80 - 03.88		
1.6 TD	04.82 - 03.88		
Spurstangenkopf / Tie-rod End Innengewinde [mm] / Inner Thread [mm]:M14x1,5 Gewindeart: mit Rechtsgewinde / Thread Type: with right-hand thread			**10143** **811 419 812 A**
1.3, 40 kW	08.80 - 07.83		
1.3, 44 kW, 1263 ccm	08.80 - 07.86		
1.6, 51 kW	08.87 - 03.88		
1.6, 53 kW	02.86 - 03.88		
1.6, 55 kW	08.80 - 03.88		
1.6, 63 kW	01.81 - 02.83		
1.8, 64 kW	05.86 - 03.88		
1.8, 66 kW	01.83 - 03.88		
1.8 Syncro	01.86 - 03.88		
1.8, 82 kW	12.83 - 03.88		
1.9	01.81 - 07.83		
2.0	08.83 - 03.88		
2.0 Syncro	05.84 - 03.88		
2.2, 85 kW	08.85 - 03.88		
2.2 Syncro	08.85 - 03.88		
2.2, 100 kW	01.85 - 03.88		
1.6 D	08.80 - 03.88		
1.6 TD	04.82 - 03.88		
Trag-/Führungsgelenk / Support-/ Steering Link Mit ovalen Flanschbohrungen / With oval flange boreholes			**10148** **855 407 365 A**
1.3, 40 kW	08.80 - 07.83		
1.3, 44 kW, 1263 ccm	08.80 - 07.86		
1.6, 51 kW	08.87 - 03.88		
1.6, 53 kW	02.86 - 03.88		
1.6, 55 kW	08.80 - 03.88		
1.6, 63 kW	01.81 - 02.83		
1.8, 64 kW	05.86 - 03.88		
1.8, 66 kW	01.83 - 03.88		
1.8 Syncro	01.86 - 03.88		
1.8, 82 kW	12.83 - 03.88		
1.9	01.81 - 07.83		
2.0	08.83 - 03.88		
2.0 Syncro	05.84 - 03.88		
2.2, 85 kW	08.85 - 03.88		
2.2, 100 kW	01.85 - 03.88		
1.6 D	08.80 - 03.88		
1.6 TD	04.82 - 03.88		
2.2 Syncro	08.85 - 03.88		

VOLKSWAGEN

PASSAT Variant/Estate/Break (32B) 08.80 - 06.89

Trag-/Führungsgelenk / Support-/ Steering Link Mit ovalen Flanschbohrungen / With oval flange boreholes			**10151** **855 407 366 A**
1.3, 40 kW	08.80 - 07.83		
1.3, 44 kW, 1263 ccm	08.80 - 07.86		
1.6, 51 kW	08.87 - 03.88		
1.6, 53 kW	02.86 - 03.88		
1.6, 55 kW	08.80 - 03.88		
1.6, 63 kW	01.81 - 02.83		
1.8, 64 kW	05.86 - 03.88		
1.8, 66 kW	01.83 - 03.88		
1.8 Syncro	01.86 - 03.88		
1.8, 82 kW	12.83 - 03.88		
1.9	01.81 - 07.83		
2.0	08.83 - 03.88		
2.0 Syncro	05.84 - 03.88		
2.2, 85 kW	08.85 - 03.88		
2.2, 100 kW	01.85 - 03.88		
1.6 D	08.80 - 03.88		
1.6 TD	04.82 - 03.88		
2.2 Syncro	08.85 - 03.88		
Trag-/Führungsgelenk / Support-/ Steering Link			**10153** **823 407 365 E**
1.3, 40 kW	08.80 - 07.83		
1.3, 44 kW, 1263 ccm	08.80 - 07.86		
1.6, 51 kW	08.87 - 03.88		
1.6, 53 kW	02.86 - 03.88		
1.6, 55 kW	08.80 - 03.88		
1.6, 63 kW	01.81 - 02.83		
1.8, 64 kW	05.86 - 03.88		
1.8, 66 kW	01.83 - 03.88		
1.8, 82 kW	12.83 - 03.88		
1.9	01.81 - 07.83		
2.0	08.83 - 03.88		
2.2, 85 kW	08.85 - 03.88		
2.2, 100 kW	01.85 - 03.88		
1.6 TD	04.82 - 03.88		
1.6 D	08.80 - 03.88		
Lagerung, Lenker / Mounting, wishbone		A38	**10125** **811 407 181 A**
1.3, 40 kW	08.80 - 07.83		
1.6, 51 kW	08.87 - 03.88		
1.6, 53 kW	02.86 - 03.88		
1.8, 64 kW	05.86 - 03.88		
1.8 Syncro	01.86 - 03.88		
1.8, 82 kW	12.83 - 03.88		
1.9	01.81 - 07.83		
2.0	08.83 - 03.88		
2.2, 85 kW	08.85 - 03.88		
2.2, 100 kW	01.85 - 03.88		
1.3, 44 kW, 1263 ccm	08.80 - 07.86		
1.6, 55 kW	08.80 - 03.88		
1.8, 66 kW	01.83 - 03.88	->12.1983	
1.6 D	08.80 - 03.88	->Chass. 32-E-150 000	
1.6 TD	04.82 - 03.88		
1.3, 44 kW, 1263 ccm	08.80 - 07.86		
1.6, 55 kW	08.80 - 03.88		
1.8, 66 kW	01.83 - 03.88		
1.6 D	08.80 - 03.88		
1.6 TD	04.82 - 03.88		
1.6, 63 kW	01.81 - 02.83		
Lagerung, Lenker / Mounting, wishbone		A37,5	**10126** **8A0 407 181**
1.3, 40 kW	08.80 - 07.83		
1.3, 44 kW, 1263 ccm	08.80 - 07.86		
1.6, 51 kW	08.87 - 03.88		
1.6, 53 kW	02.86 - 03.88		
1.6, 55 kW	08.80 - 03.88		
1.6, 63 kW	01.81 - 02.83		
1.8, 64 kW	05.86 - 03.88		
1.8, 66 kW	01.83 - 03.88		
1.8 Syncro	01.86 - 03.88		
1.8, 82 kW	12.83 - 03.88		
1.9	01.81 - 07.83		
2.0	08.83 - 03.88		
2.0 Syncro	05.84 - 03.88		
2.2, 85 kW	08.85 - 03.88		
2.2, 100 kW	01.85 - 03.88		
1.6 D	08.80 - 03.88		
1.6 TD	04.82 - 03.88		

VOLKSWAGEN

PASSAT Variant/Estate/Break (32B) 08.80 - 06.89

Stabilisatorlager / Mounting, Stabilizer			I12,5	**13760** **823 411 313 A**
1.3, 40 kW	08.80 - 07.83			
1.3, 44 kW, 1263 ccm	08.80 - 07.86			
1.6, 55 kW	08.80 - 03.88			
1.6, 63 kW	01.81 - 02.83			
1.8, 66 kW	01.83 - 03.88			
1.9	01.81 - 07.83			
1.6 TD	04.82 - 03.88			
1.6, 51 kW	08.87 - 03.88			
1.6, 53 kW	02.86 - 03.88			
1.8, 64 kW	05.86 - 03.88			
1.8, 82 kW	12.83 - 03.88			
2.0	08.83 - 03.88			
2.2, 85 kW	08.85 - 03.88			
2.2, 100 kW	01.85 - 03.88			
1.6 D	08.80 - 03.88			
Faltenbalgsatz, Lenkung / Bellow Kit, steering system				**30128** **811 419 831 B**
1.3, 40 kW	08.80 - 07.83			
1.3, 44 kW, 1263 ccm	08.80 - 07.86			
1.6, 51 kW	08.87 - 03.88			
1.6, 53 kW	02.86 - 03.88			
1.6, 55 kW	08.80 - 03.88			
1.6, 63 kW	01.81 - 02.83			
1.8, 64 kW	05.86 - 03.88			
1.8, 66 kW	01.83 - 03.88			
1.8 Syncro	01.86 - 03.88			
1.8, 82 kW	12.83 - 03.88			
1.9	01.81 - 07.83			
2.0	08.83 - 03.88			
2.0 Syncro	05.84 - 03.88			
2.2, 85 kW	08.85 - 03.88			
2.2 Syncro	08.85 - 03.88			
2.2, 100 kW	01.85 - 03.88			
1.6 D	08.80 - 03.88			
1.6 TD	04.82 - 03.88			

Achskörperlager / Mounting, axle body			**10193** **321 501 541**
1.3, 40 kW	08.80 - 07.83		
1.3, 44 kW, 1263 ccm	08.80 - 07.86		
1.6, 51 kW	08.87 - 03.88		
1.6, 53 kW	02.86 - 03.88		
1.6, 55 kW	08.80 - 03.88		
1.6, 63 kW	01.81 - 02.83		
1.8, 64 kW	05.86 - 03.88		
1.8, 66 kW	01.83 - 03.88		
1.8, 82 kW	12.83 - 03.88		
1.9	01.81 - 07.83		
2.0	08.83 - 03.88		
2.2, 85 kW	08.85 - 03.88		
2.2, 100 kW	01.85 - 03.88		
1.6 D	08.80 - 03.88		
1.6 TD	04.82 - 03.88		

VOLKSWAGEN

PASSAT (3A2, 35I) 02.88 - 08.96

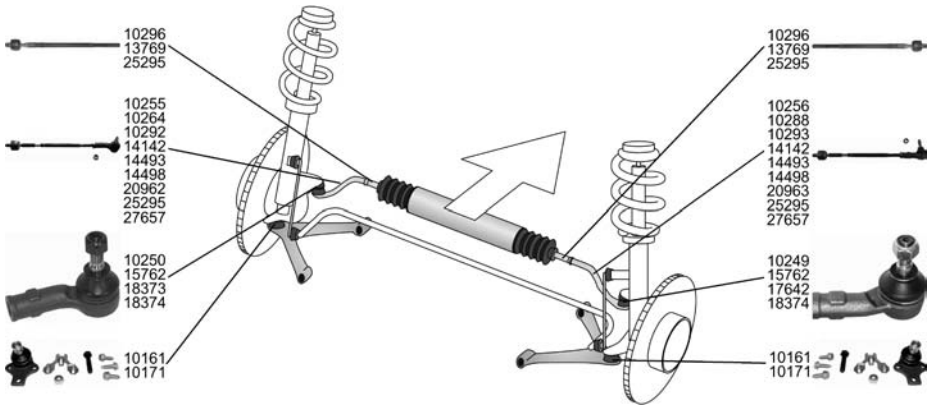

Spurstange / Tie Rod, steering Achsausführung / Axle Version:TRW Konusmaß [mm] / Cone Size [mm]:14 Rohrdurchmesser am Sitz für Faltenbalg 12,7 mm (TRW-Lenkung) / Tube diameter at bellows seating 12,7 mm (TRW-steering)		**10255** **357 422 803**
1.6, 53 kW 02.88 - 09.91 1.6, 55 kW 02.88 - 12.88 1.8, 79 kW 04.88 - 07.93 1.8, 82 kW 04.88 - 07.92 1.8 16V 04.88 - 12.89 2.0 16V, 100 kW 08.88 - 09.93 1.6 TD 08.88 - 09.93 1.9 D 05.89 - 10.93		
1.6, 74 kW 10.94 - 08.96 1.8, 55 kW 08.90 - 08.96 1.8, 66 kW 02.88 - 08.96 1.8 G60 Syncro 08.88 - 08.96 2.0, 85 kW 02.90 - 08.96 2.0 Syncro 10.90 - 08.96 1.9 TD 03.91 - 08.96 1.9 TDI, 66 kW 10.93 - 08.96	->Chass. 3A-R-099 264	
Spurstange / Tie Rod, steering Achsausführung / Axle Version:TRW Konusmaß [mm] / Cone Size [mm]:14 Rohrdurchmesser am Sitz für Faltenbalg 12,7 mm (TRW-Lenkung) / Tube diameter at bellows seating 12,7 mm (TRW-steering)		**10256** **357 422 804**
1.6, 53 kW 02.88 - 09.91 1.6, 55 kW 02.88 - 12.88 1.8, 79 kW 04.88 - 07.93 1.8, 82 kW 04.88 - 07.92 1.8 16V 04.88 - 12.89 2.0 16V, 100 kW 08.88 - 09.93 1.6 TD 08.88 - 09.93 1.9 D 05.89 - 10.93		
1.6, 74 kW 10.94 - 08.96 1.8, 55 kW 08.90 - 08.96 1.8, 66 kW 02.88 - 08.96 1.8 G60 Syncro 08.88 - 08.96 2.0, 85 kW 02.90 - 08.96 2.0 Syncro 10.90 - 08.96 1.9 TD 03.91 - 08.96 1.9 TDI, 66 kW 10.93 - 08.96	->Chass. 3A-R-099 264	
Spurstange / Tie Rod, steering Konusmaß [mm] / Cone Size [mm]:14 Rohr-Ø [mm] / Pipe Ø [mm]:16 mit Zubehör / With accessories		**10264** **357 419 803** 10250
1.6, 53 kW 02.88 - 09.91 1.6, 55 kW 02.88 - 12.88 1.8 02.88 - 08.96 1.8 16V 04.88 - 12.89 2.0, 85 kW 02.90 - 08.96 2.0 Syncro 10.90 - 08.96 2.0 16V, 100 kW 08.88 - 09.93 1.6 TD 08.88 - 09.93 1.9 D 05.89 - 10.93 1.9 TD 03.91 - 08.96		

VOLKSWAGEN

PASSAT (3A2, 35I) 02.88 - 08.96

Spurstange / Tie Rod, steering Konusmaß [mm] / Cone Size [mm]:14 Rohr-Ø [mm] / Pipe Ø [mm]:16 mit Zubehör / With accessories			**10288** **357 419 804** 10249
1.6, 53 kW	02.88 - 09.91		
1.6, 55 kW	02.88 - 12.88		
1.8	02.88 - 08.96		
1.8 16V	04.88 - 12.89		
2.0, 85 kW	02.90 - 08.96		
2.0 Syncro	10.90 - 08.96		
2.0 16V, 100 kW	08.88 - 09.93		
1.6 TD	08.88 - 09.93		
1.9 D	05.89 - 10.93		
1.9 TD	03.91 - 08.96		
Spurstange / Tie Rod, steering Achsausführung / Axle Version:ZF Konusmaß [mm] / Cone Size [mm]:14 Rohrdurchmesser am Sitz für Faltenbalg 15 mm (ZF-Lenkung) / Tube diameter at bellows seating 15 mm (ZF-steering)			**10292** **357 422 803 A**
1.6, 53 kW	02.88 - 09.91		
1.6, 55 kW	02.88 - 12.88		
1.8, 79 kW	04.88 - 07.93		
1.8, 82 kW	04.88 - 07.92		
1.8 16V	04.88 - 12.89		
2.0 16V, 100 kW	08.88 - 09.93		
1.6 TD	08.88 - 09.93		
1.9 D	05.89 - 10.93		
1.6, 74 kW	10.94 - 08.96	->Chass. 3A-R-099 264	
1.8, 55 kW	08.90 - 08.96		
1.8, 66 kW	02.88 - 08.96		
1.8 G60 Syncro	08.88 - 08.96		
2.0, 79 kW	03.95 - 08.96		
2.0, 85 kW	02.90 - 08.96		
2.0 Syncro	10.90 - 08.96		
2.8 VR6	06.91 - 08.96		
1.9 TD	03.91 - 08.96		
1.9 TDI, 81 kW	03.96 - 08.96		
Spurstange / Tie Rod, steering Achsausführung / Axle Version:ZF Konusmaß [mm] / Cone Size [mm]:14 Rohrdurchmesser am Sitz für Faltenbalg 15 mm (ZF-Lenkung) / Tube diameter at bellows seating 15 mm (ZF-steering)			**10293** **357 422 804 A**
1.6, 53 kW	02.88 - 09.91		
1.6, 55 kW	02.88 - 12.88		
1.8, 79 kW	04.88 - 07.93		
1.8, 82 kW	04.88 - 07.92		
1.8 16V	04.88 - 12.89		
2.0 16V, 100 kW	08.88 - 09.93		
1.6 TD	08.88 - 09.93		
1.9 D	05.89 - 10.93		
1.6, 74 kW	10.94 - 08.96	->Chass. 3A-R-099 264	
1.8, 55 kW	08.90 - 08.96		
1.8, 66 kW	02.88 - 08.96		
1.8 G60 Syncro	08.88 - 08.96		
2.0, 79 kW	03.95 - 08.96		
2.0, 85 kW	02.90 - 08.96		
2.0 Syncro	10.90 - 08.96		
2.8 VR6	06.91 - 08.96		
1.9 TD	03.91 - 08.96		
1.9 TDI, 81 kW	03.96 - 08.96		
Spurstange / Tie Rod, steering Achsausführung / Axle Version:TRW Konusmaß [mm] / Cone Size [mm]:14 Rohrdurchmesser am Sitz für Faltenbalg 12,7 mm (TRW-Lenkung) / Tube diameter at bellows seating 12,7 mm (TRW-steering)		RHD	**14142** **357 422 804 C**
2.0 16V, 110 kW	01.94 - 08.96	->Chass. 3A-R-099 264	
2.8 VR6	06.91 - 08.96		

VOLKSWAGEN

PASSAT (3A2, 35I) 02.88 - 08.96

Spurstange / Tie Rod, steering Achsausführung / Axle Version:TRW Konusmaß [mm] / Cone Size [mm]:14 Rohrdurchmesser am Sitz für Faltenbalg 12,7 mm (TRW-Lenkung) / Tube diameter at bellows seating 12,7 mm (TRW-steering)		LHD	**14493** **357 422 804 B**
2.8 VR6	06.91 - 08.96	für / for:ZF ->Chass. 3A-R-099 264	
2.8 VR6	06.91 - 08.96	->Chass. 3A-R-099 264	
2.0 16V, 110 kW	01.94 - 08.96	für / for:TRW ->Chass. 3A-R-099 264	
2.0 16V, 110 kW	01.94 - 08.96	->Chass. 3A-R-099-264	
Spurstange / Tie Rod, steering Konusmaß [mm] / Cone Size [mm]:14 Rohr-Ø [mm] / Pipe Ø [mm]:13 mit Zubehör / With accessories Rohrdurchmesser am Sitz für Faltenbalg 15 mm (ZF-Lenkung) / Tube diameter at bellows seating 15 mm (ZF-steering)			**14498** **357 422 803 D**
2.8 VR6	06.91 - 08.96	für / for:ZF ->Chass. 3A-R-099 264	
Spurstange / Tie Rod, steering Achsausführung / Axle Version:TRW Rohrdurchmesser am Sitz für Faltenbalg 12,7 mm (TRW-Lenkung) / Tube diameter at bellows seating 12,7 mm (TRW-steering)			**20962** **3A0 422 803 C**
1.8, 55 kW	08.90 - 08.96	Chass. 3A-R-099 265->	
1.8 G60 Syncro	08.88 - 08.96		
2.0, 85 kW	02.90 - 08.96		
2.0 Syncro	10.90 - 08.96		
1.9 TD	03.91 - 08.96		
1.9 TDI, 66 kW	10.93 - 08.96		
1.6, 74 kW	10.94 - 08.96		
2.0, 79 kW	03.95 - 08.96		
Spurstange / Tie Rod, steering Achsausführung / Axle Version:TRW Rohrdurchmesser am Sitz für Faltenbalg 12,7 mm (TRW-Lenkung) / Tube diameter at bellows seating 12,7 mm (TRW-steering)			**20963** **3A0 422 804 C**
1.8, 55 kW	08.90 - 08.96	Chass. 3A-R-099 265->	
1.8, 66 kW	02.88 - 08.96		
1.8 G60 Syncro	08.88 - 08.96		
2.0, 85 kW	02.90 - 08.96		
2.0 Syncro	10.90 - 08.96		
1.9 TD	03.91 - 08.96		
1.9 TDI, 66 kW	10.93 - 08.96		
1.6, 74 kW	10.94 - 08.96		
2.0, 79 kW	03.95 - 08.96		
Spurstange / Tie Rod, steering Achsausführung / Axle Version:ZF mit Zubehör / With accessories			**27657** **3A0 422 803 D** 18374 25295
2.0 16V, 110 kW	01.94 - 08.96	Chass. 3A-R-099 265->	
2.8 VR6	06.91 - 08.96		
1.9 TDI, 81 kW	03.96 - 08.96		

VOLKSWAGEN

PASSAT (3A2, 35I) 02.88 - 08.96

Spurstangenkopf / Tie-rod End — **10249** — **191 419 812**

Befestigungsart: hängend / Fastening Type: Suspended
Konusmaß [mm] / Cone Size [mm]:14
Innengewinde [mm] / Inner Thread [mm]:M14x1,5
Gewindeart: mit Rechtsgewinde / Thread Type: with right-hand thread
mit Zubehör / With accessories
Gewindemaß / Thread Size:M14x1,5

1.6, 53 kW	02.88 - 09.91	
1.6, 55 kW	02.88 - 12.88	
1.8, 79 kW	04.88 - 07.93	
1.8, 82 kW	04.88 - 07.92	
1.8 16V	04.88 - 12.89	
2.0 16V, 100 kW	08.88 - 09.93	
1.6 TD	08.88 - 09.93	
1.9 D	05.89 - 10.93	
1.8, 55 kW	08.90 - 08.96	
1.8, 66 kW	02.88 - 08.96	
1.8 G60 Syncro	08.88 - 08.96	----------
2.0, 85 kW	02.90 - 08.96	
2.0 Syncro	10.90 - 08.96	->Chass. 3A-R-099 264
1.9 TD	03.91 - 08.96	
1.9 TDI, 66 kW	10.93 - 08.96	
2.8 VR6	06.91 - 08.96	->Chass. 31-N-255 989

Spurstangenkopf / Tie-rod End — **10250** — **191 419 811**

Befestigungsart: hängend / Fastening Type: Suspended
Konusmaß [mm] / Cone Size [mm]:14
Innengewinde [mm] / Inner Thread [mm]:M14x1,5
Gewindeart: mit Rechtsgewinde / Thread Type: with right-hand thread
mit Zubehör / With accessories
Gewindemaß / Thread Size:M14x1,5

1.6, 53 kW	02.88 - 09.91	
1.6, 55 kW	02.88 - 12.88	
1.8, 79 kW	04.88 - 07.93	
1.8, 82 kW	04.88 - 07.92	
1.8 16V	04.88 - 12.89	
2.0 16V, 100 kW	08.88 - 09.93	
1.6 TD	08.88 - 09.93	
1.9 D	05.89 - 10.93	
1.8, 55 kW	08.90 - 08.96	
1.8, 66 kW	02.88 - 08.96	
1.8 G60 Syncro	08.88 - 08.96	----------
2.0, 85 kW	02.90 - 08.96	
2.0 Syncro	10.90 - 08.96	->Chass. 3A-R-099 264
1.9 TD	03.91 - 08.96	
1.9 TDI, 66 kW	10.93 - 08.96	
2.8 VR6	06.91 - 08.96	->Chass. 31-N-255 989

Spurstangenkopf / Tie-rod End — **15762** — **357 422 811**

Konusmaß [mm] / Cone Size [mm]:14
Innengewinde [mm] / Inner Thread [mm]:M14x1,5
Gewindeart: mit Rechtsgewinde / Thread Type: with right-hand thread
für OE / for OE 025 390 138 617
mit Zubehör / With accessories
Rohrdurchmesser am Sitz für Faltenbalg 15 mm (ZF-Lenkung) / Tube diameter at bellows seating 15 mm (ZF-steering)

2.8 VR6	06.91 - 08.96	Chass. 31-N-255 990 - Chass. 3A-R-099 264
2.0 16V, 110 kW	01.94 - 08.96	->Chass. 3A-R-099 264

VOLKSWAGEN

PASSAT (3A2, 35I) 02.88 - 08.96

Spurstangenkopf / Tie-rod End
Gewindeart: mit Rechtsgewinde / Thread Type: with right-hand thread
mit Zubehör / With accessories

17642 **3A0 422 812**

1.6, 53 kW	02.88 - 09.91	für / for:TRW Chass. 3A-R-099 265->
1.6, 55 kW	02.88 - 12.88	
1.6, 74 kW	10.94 - 08.96	
1.8	02.88 - 08.96	
1.8 16V	04.88 - 12.89	
1.8 G60 Syncro	08.88 - 08.96	
2.0, 79 kW	03.95 - 08.96	
2.0, 85 kW	02.90 - 08.96	
2.0 Syncro	10.90 - 08.96	
2.0 16V	08.88 - 08.96	
2.8 VR6	06.91 - 08.96	
1.6 TD	08.88 - 09.93	
1.9 D	05.89 - 10.93	
1.9 TD	03.91 - 08.96	
1.9 TDI	10.93 - 08.96	

Spurstangenkopf / Tie-rod End
Gewindeart: mit Rechtsgewinde / Thread Type: with right-hand thread
mit Zubehör / With accessories

18373 **3A0 422 811**

1.6, 53 kW	02.88 - 09.91	für / for:TRW Chass. 3A-R-099 265->
1.6, 55 kW	02.88 - 12.88	
1.6, 74 kW	10.94 - 08.96	
1.8	02.88 - 08.96	
1.8 16V	04.88 - 12.89	
1.8 G60 Syncro	08.88 - 08.96	
2.0, 79 kW	03.95 - 08.96	
2.0, 85 kW	02.90 - 08.96	
2.0 Syncro	10.90 - 08.96	
2.0 16V	08.88 - 08.96	
2.8 VR6	06.91 - 08.96	
1.6 TD	08.88 - 09.93	
1.9 D	05.89 - 10.93	
1.9 TD	03.91 - 08.96	
1.9 TDI	10.93 - 08.96	

Spurstangenkopf / Tie-rod End
mit Zubehör / With accessories

18374 **3A0 422 811 A**

2.8 VR6	06.91 - 08.96	12.1993-> Chass. 3A-R-099 265->
2.0 16V, 110 kW	01.94 - 08.96	
1.9 TDI, 81 kW	03.96 - 08.96	

Axialgelenk, Spurstange / Axial Rod, tie rod
Gewindemaß / Thread Size:M14x1,5
Gewindeart: mit Rechtsgewinde / Thread Type: with right-hand thread
für OE / for OE 025 390 115 617 LH
Achsausführung / Axle Version:ZF
Rohrdurchmesser am Sitz für Faltenbalg 15 mm (ZF-Lenkung) / Tube diameter at bellows seating 15 mm (ZF-steering)

10296 **357 422 807 A**

1.6, 53 kW	02.88 - 09.91	für / for:ZF
1.6, 55 kW	02.88 - 12.88	
1.8	02.88 - 08.96	
1.8 16V	04.88 - 12.89	
1.8 G60 Syncro	08.88 - 08.96	
2.0, 85 kW	02.90 - 08.96	
2.0 Syncro	10.90 - 08.96	
2.0 16V	08.88 - 08.96	
1.6 TD	08.88 - 09.93	
1.9 D	05.89 - 10.93	
1.9 TD	03.91 - 08.96	
2.8 VR6	06.91 - 08.96	für / for:ZF ->Chass. 31-N-255 989

VOLKSWAGEN

PASSAT (3A2, 35I) 02.88 - 08.96

Axialgelenk, Spurstange / Axial Rod, tie rod
Achsausführung / Axle Version:ZF
Gewindeart: mit Rechtsgewinde / Thread Type: with right-hand thread
ohne Zubehör / without accessories

13769

1.6, 53 kW	02.88 - 09.91	Rohrdurchmesser am Sitz für Faltenbalg 15 mm (ZF-Lenkung) / Tube diameter at bellows seating 15 mm (ZF-steering) Nur in Verbindung mit Faltenbalg 357 422 831 B (ZF) / Only in connection with bellow 357 422 831 B (ZF)
1.6, 55 kW	02.88 - 12.88	
1.8	02.88 - 08.96	
1.8 16V	04.88 - 12.89	
2.0, 85 kW	02.90 - 08.96	
2.0 Syncro	10.90 - 08.96	
2.0 16V, 100 kW	08.88 - 09.93	
1.6 TD	08.88 - 09.93	
1.9 D	05.89 - 10.93	
1.9 TD	03.91 - 08.96	

Axialgelenk, Spurstange / Axial Rod, tie rod
Achsausführung / Axle Version:ZF
mit Zubehör / With accessories
Rohrdurchmesser am Sitz für Faltenbalg 15 mm (ZF-Lenkung) / Tube diameter at bellows seating 15 mm (ZF-steering)

25295 **357 422 807 D**

2.8 VR6	06.91 - 08.96	Chass. 31-N-255 990->
2.8 VR6	06.91 - 08.96	Chass. 3A-R-099 265->
2.0 16V, 110 kW	01.94 - 08.96	Chass. 3A-R-099 265->
1.9 TDI, 81 kW	03.96 - 08.96	

Lenker, Radaufhängung / Track Control Arm
nur in Verbindung mit / Only in connection with:Lemförder 10161
ohne Befestigungsmaterial / without fastening material
ohne Trag-/Führungsgelenk / without support/ steering link
mit Gummilager / with rubber mounting

27746 **357 407 151**
10203
10205

1.6, 53 kW	02.88 - 09.91	
1.6, 55 kW	02.88 - 12.88	
1.6, 74 kW	10.94 - 08.96	
1.8	02.88 - 08.96	
1.8 16V	04.88 - 12.89	
1.8 G60 Syncro	08.88 - 08.96	
2.0, 79 kW	03.95 - 08.96	
2.0, 85 kW	02.90 - 08.96	
2.0 Syncro	10.90 - 08.96	
2.0 16V, 100 kW	08.88 - 09.93	
1.6 TD	08.88 - 09.93	
1.9 D	05.89 - 10.93	
1.9 TD	03.91 - 08.96	
1.9 TDI, 66 kW	10.93 - 08.96	
2.8 VR6	06.91 - 08.96	->Chass. 31-N-255 989

Trag-/Führungsgelenk / Support-/ Steering Link
mit Zubehör / With accessories
für OE / for OE 191 407 151 B

10161 **357 407 365**

1.6, 53 kW	02.88 - 09.91
1.6, 55 kW	02.88 - 12.88
1.6, 74 kW	10.94 - 08.96
1.8	02.88 - 08.96
1.8 16V	04.88 - 12.89
1.8 G60 Syncro	08.88 - 08.96
2.0, 79 kW	03.95 - 08.96
2.0, 85 kW	02.90 - 08.96
2.0 Syncro	10.90 - 08.96
2.0 16V, 100 kW	08.88 - 09.93
1.6 TD	08.88 - 09.93
1.9 D	05.89 - 10.93
1.9 TD	03.91 - 08.96
1.9 TDI	10.93 - 08.96

Trag-/Führungsgelenk / Support-/ Steering Link
Gewindemaß / Thread Size:M12x1,5
Gewindeart: mit Rechtsgewinde / Thread Type: with right-hand thread

10171 **1H0 407 365**

2.0 16V, 110 kW	01.94 - 08.96
2.8 VR6	06.91 - 08.96
1.9 TDI, 81 kW	03.96 - 08.96

VOLKSWAGEN

PASSAT (3A2, 35I) 02.88 - 08.96

Lagerung, Lenker / Mounting, wishbone		I12/A33	**10203** **357 407 182**
1.6, 53 kW	02.88 - 09.91		
1.6, 55 kW	02.88 - 12.88		
1.6, 74 kW	10.94 - 08.96		
1.8	02.88 - 08.96		
1.8 16V	04.88 - 12.89		
1.8 G60 Syncro	08.88 - 08.96		
2.0, 79 kW	03.95 - 08.96		
2.0, 85 kW	02.90 - 08.96		
2.0 Syncro	10.90 - 08.96		
2.0 16V	08.88 - 08.96		
2.8 VR6	06.91 - 08.96		
1.6 TD	08.88 - 09.93		
1.9 D	05.89 - 10.93		
1.9 TD	03.91 - 08.96		
1.9 TDI	10.93 - 08.96		
Lagerung, Lenker / Mounting, wishbone ohne Montagehülsen / without mounting sleeve			**10205** **191 407 181 E**
1.6, 53 kW	02.88 - 09.91		
1.6, 55 kW	02.88 - 12.88		
1.6, 74 kW	10.94 - 08.96		
1.8	02.88 - 08.96		
1.8 16V	04.88 - 12.89		
1.8 G60 Syncro	08.88 - 08.96		
2.0, 79 kW	03.95 - 08.96		
2.0, 85 kW	02.90 - 08.96		
2.0 Syncro	10.90 - 08.96		
2.0 16V	08.88 - 08.96		
2.8 VR6	06.91 - 08.96		
1.6 TD	08.88 - 09.93		
1.9 D	05.89 - 10.93		
1.9 TD	03.91 - 08.96		
1.9 TDI	10.93 - 08.96		
Lagerung, Lenker / Mounting, wishbone mit Montagehülsen / with mounting sleeve			**25352** **191 407 181 E**
1.6, 53 kW	02.88 - 09.91		
1.6, 55 kW	02.88 - 12.88		
1.6, 74 kW	10.94 - 08.96		
1.8	02.88 - 08.96		
1.8 16V	04.88 - 12.89		
1.8 G60 Syncro	08.88 - 08.96		
2.0, 79 kW	03.95 - 08.96		
2.0, 85 kW	02.90 - 08.96		
2.0 Syncro	10.90 - 08.96		
2.0 16V	08.88 - 08.96		
2.8 VR6	06.91 - 08.96		
1.6 TD	08.88 - 09.93		
1.9 D	05.89 - 10.93		
1.9 TD	03.91 - 08.96		
1.9 TDI	10.93 - 08.96		
Lagerbuchse, Stabilisator / Bushing, stabilizer			**17635** **357 411 329**
1.6, 53 kW	02.88 - 09.91		
1.6, 55 kW	02.88 - 12.88		
1.6, 74 kW	10.94 - 08.96		
1.8	02.88 - 08.96		
1.8 16V	04.88 - 12.89		
1.8 G60 Syncro	08.88 - 08.96		
2.0, 79 kW	03.95 - 08.96		
2.0, 85 kW	02.90 - 08.96		
2.0 Syncro	10.90 - 08.96		
2.0 16V	08.88 - 08.96		
2.8 VR6	06.91 - 08.96		
1.6 TD	08.88 - 09.93		
1.9 D	05.89 - 10.93		
1.9 TD	03.91 - 08.96		
1.9 TDI	10.93 - 08.96		

VOLKSWAGEN

PASSAT (3A2, 35I) 02.88 - 08.96

Stabilisatorlager / Mounting, Stabilizer			I22,7	**27438** **357 411 313 A**
2.0, 85 kW	02.90 - 08.96	Mot. 2E- 01.1994 - 12.1993 Stufenheck / Saloon		
2.0 Syncro	10.90 - 08.96			
1.8, 55 kW	08.90 - 08.96	01.1994->		
1.8 G60 Syncro	08.88 - 08.96			
1.9 TD	03.91 - 08.96			
1.9 TDI, 66 kW	10.93 - 08.96	Mot. AHU - TDI 01.1994->		
1.8, 66 kW	02.88 - 08.96	01.1994-> Mot. RP-->		
2.8 VR6	06.91 - 08.96	01.1994 - 12.1993 Stufenheck / Saloon		
2.0, 79 kW	03.95 - 08.96			
2.0 16V, 110 kW	01.94 - 08.96			
1.9 TDI, 81 kW	03.96 - 08.96			
1.6, 74 kW	10.94 - 08.96	Mot. AEK-		
Faltenbalgsatz, Lenkung / Bellow Kit, steering system				**30111** **1H0 422 831 B**
1.6, 53 kW	02.88 - 09.91	für / for:TRW		
1.6, 55 kW	02.88 - 12.88			
1.6, 74 kW	10.94 - 08.96			
1.8	02.88 - 08.96			
1.8 16V	04.88 - 12.89			
1.8 G60 Syncro	08.88 - 08.96			
2.0, 79 kW	03.95 - 08.96			
2.0, 85 kW	02.90 - 08.96			
2.0 Syncro	10.90 - 08.96			
2.0 16V	08.88 - 08.96			
2.8 VR6	06.91 - 08.96			
1.6 TD	08.88 - 09.93			
1.9 D	05.89 - 10.93			
1.9 TD	03.91 - 08.96			
1.9 TDI	10.93 - 08.96			
Faltenbalgsatz, Lenkung / Bellow Kit, steering system				**30126** **357 422 831 B**
1.6, 74 kW	10.94 - 08.96			
2.0, 79 kW	03.95 - 08.96			
1.9 TDI, 81 kW	03.96 - 08.96	für / for:ZF		
Achskörperlager / Mounting, axle body			A56	**10194** **3A0 501 541**
1.6, 53 kW	02.88 - 09.91			
1.6, 55 kW	02.88 - 12.88			
1.6, 74 kW	10.94 - 08.96			
1.8	02.88 - 08.96			
1.8 16V	04.88 - 12.89			
2.0, 79 kW	03.95 - 08.96			
2.0, 85 kW	02.90 - 08.96			
2.0 16V	08.88 - 08.96			
2.8 VR6	06.91 - 08.96			
1.6 TD	08.88 - 09.93			
1.9 D	05.89 - 10.93			
1.9 TD	03.91 - 08.96			
1.9 TDI	10.93 - 08.96			
Achskörperlager / Mounting, axle body mit Zubehör / With accessories			A56	**27682** **3A0 501 541**
1.6, 53 kW	02.88 - 09.91			
1.6, 55 kW	02.88 - 12.88			
1.6, 74 kW	10.94 - 08.96			
1.8	02.88 - 08.96			
1.8 16V	04.88 - 12.89			
2.0, 79 kW	03.95 - 08.96			
2.0, 85 kW	02.90 - 08.96			
2.0 16V	08.88 - 08.96			
2.8 VR6	06.91 - 08.96			
1.6 TD	08.88 - 09.93			
1.9 D	05.89 - 10.93			
1.9 TD	03.91 - 08.96			
1.9 TDI	10.93 - 08.96			

VOLKSWAGEN

PASSAT Variant/Estate/Break (3A5, 35I) 02.88 - 05.97

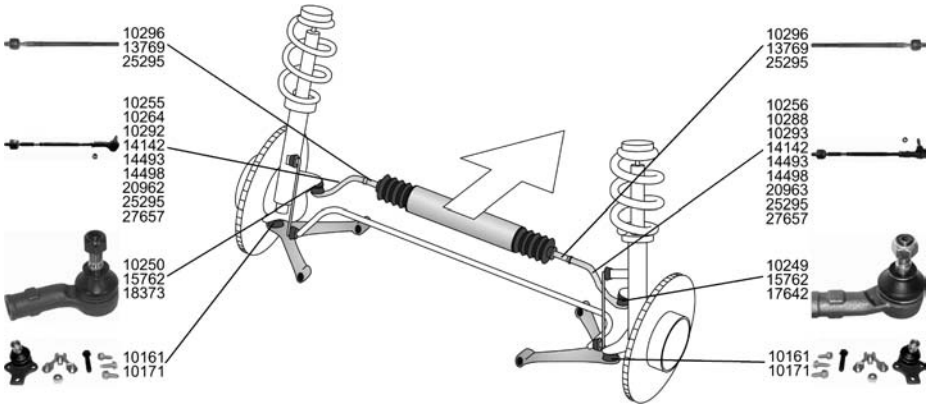

Spurstange / Tie Rod, steering Achsausführung / Axle Version:TRW Konusmaß [mm] / Cone Size [mm]:14 Rohrdurchmesser am Sitz für Faltenbalg 12,7 mm (TRW-Lenkung) / Tube diameter at bellows seating 12,7 mm (TRW-steering)			**10255** **357 422 803**
1.6, 53 kW	04.88 - 09.91		
1.6, 55 kW	04.88 - 12.88		
1.8, 79 kW	04.88 - 07.90		
1.8, 82 kW	04.88 - 07.92		
1.8 16V	04.88 - 12.89		
2.0 16V, 100 kW	08.88 - 09.93		
1.6 TD	08.88 - 09.93		
1.9 D	05.89 - 10.93		
1.8, 55 kW	08.90 - 05.97	->Chass. 3A-R-099 264	
1.8, 66 kW	02.88 - 05.97		
1.8 G60 Syncro	08.88 - 05.97		
2.0, 85 kW	02.90 - 05.97		
2.0 Syncro	10.90 - 05.97		
1.9 TD	03.91 - 05.97		
1.9 TDI, 66 kW	10.93 - 05.97		
Spurstange / Tie Rod, steering Achsausführung / Axle Version:TRW Konusmaß [mm] / Cone Size [mm]:14 Rohrdurchmesser am Sitz für Faltenbalg 12,7 mm (TRW-Lenkung) / Tube diameter at bellows seating 12,7 mm (TRW-steering)			**10256** **357 422 804**
1.6, 53 kW	04.88 - 09.91		
1.6, 55 kW	04.88 - 12.88		
1.8, 79 kW	04.88 - 07.90		
1.8, 82 kW	04.88 - 07.92		
1.8 16V	04.88 - 12.89		
2.0 16V, 100 kW	08.88 - 09.93		
1.6 TD	08.88 - 09.93		
1.9 D	05.89 - 10.93		
1.8, 55 kW	08.90 - 05.97	->Chass. 3A-R-099 264	
1.8, 66 kW	02.88 - 05.97		
1.8 G60 Syncro	08.88 - 05.97		
2.0, 85 kW	02.90 - 05.97		
2.0 Syncro	10.90 - 05.97		
1.9 TD	03.91 - 05.97		
1.9 TDI, 66 kW	10.93 - 05.97		
Spurstange / Tie Rod, steering Konusmaß [mm] / Cone Size [mm]:14 Rohr-Ø [mm] / Pipe Ø [mm]:16 mit Zubehör / With accessories			**10264** **357 419 803** 10250
1.6, 53 kW	04.88 - 09.91		
1.6, 55 kW	04.88 - 12.88		
1.8	02.88 - 05.97		
1.8 16V	04.88 - 12.89		
2.0, 85 kW	02.90 - 05.97		
2.0 Syncro	10.90 - 05.97		
2.0 16V, 100 kW	08.88 - 09.93		
1.6 TD	08.88 - 09.93		
1.9 D	05.89 - 10.93		
1.9 TD	03.91 - 05.97		

VOLKSWAGEN

PASSAT Variant/Estate/Break (3A5, 35I) 02.88 - 05.97

Spurstange / Tie Rod, steering Konusmaß [mm] / Cone Size [mm]:14 Rohr-Ø [mm] / Pipe Ø [mm]:16 mit Zubehör / With accessories			**10288** **357 419 804** 10249
1.6, 53 kW	04.88 - 09.91		
1.6, 55 kW	04.88 - 12.88		
1.8	02.88 - 05.97		
1.8 16V	04.88 - 12.89		
2.0, 85 kW	02.90 - 05.97		
2.0 Syncro	10.90 - 05.97		
2.0 16V, 100 kW	08.88 - 09.93		
1.6 TD	08.88 - 09.93		
1.9 D	05.89 - 10.93		
1.9 TD	03.91 - 05.97		
Spurstange / Tie Rod, steering Achsausführung / Axle Version:ZF Konusmaß [mm] / Cone Size [mm]:14 Rohrdurchmesser am Sitz für Faltenbalg 15 mm (ZF-Lenkung) / Tube diameter at bellows seating 15 mm (ZF-steering)			**10292** **357 422 803 A**
1.6, 53 kW	04.88 - 09.91		
1.6, 55 kW	04.88 - 12.88		
1.8, 79 kW	04.88 - 07.90		
1.8, 82 kW	04.88 - 07.92		
1.8 16V	04.88 - 12.89		
2.0 16V, 100 kW	08.88 - 09.93		
1.6 TD	08.88 - 09.93		
1.9 D	05.89 - 10.93		
1.6, 74 kW	07.94 - 12.95	->Chass. 3A-R-099 264	
1.8, 55 kW	08.90 - 05.97		
1.8, 66 kW	02.88 - 05.97		
1.8 G60 Syncro	08.88 - 05.97		
2.0, 79 kW	03.95 - 08.96		
2.0, 85 kW	02.90 - 05.97		
2.0 Syncro	10.90 - 05.97		
2.0 16V, 110 kW	01.94 - 05.97		
1.9 TD	03.91 - 05.97		
1.9 TDI, 66 kW	10.93 - 05.97	für / for:ZF ->Chass. 3A-R-099 264	
Spurstange / Tie Rod, steering Achsausführung / Axle Version:ZF Konusmaß [mm] / Cone Size [mm]:14 Rohrdurchmesser am Sitz für Faltenbalg 15 mm (ZF-Lenkung) / Tube diameter at bellows seating 15 mm (ZF-steering)			**10293** **357 422 804 A**
1.6, 53 kW	04.88 - 09.91		
1.6, 55 kW	04.88 - 12.88		
1.8, 79 kW	04.88 - 07.90		
1.8, 82 kW	04.88 - 07.92		
1.8 16V	04.88 - 12.89		
2.0 16V, 100 kW	08.88 - 09.93		
1.6 TD	08.88 - 09.93		
1.9 D	05.89 - 10.93		
1.6, 74 kW	07.94 - 12.95	->Chass. 3A-R-099 264	
1.8, 55 kW	08.90 - 05.97		
1.8, 66 kW	02.88 - 05.97		
1.8 G60 Syncro	08.88 - 05.97		
2.0, 79 kW	03.95 - 08.96		
2.0, 85 kW	02.90 - 05.97		
2.0 Syncro	10.90 - 05.97		
2.0 16V, 110 kW	01.94 - 05.97		
1.9 TD	03.91 - 05.97		
1.9 TDI, 66 kW	10.93 - 05.97	für / for:ZF ->Chass. 3A-R-099 264	
Spurstange / Tie Rod, steering Achsausführung / Axle Version:TRW Konusmaß [mm] / Cone Size [mm]:14 Rohrdurchmesser am Sitz für Faltenbalg 12,7 mm (TRW-Lenkung) / Tube diameter at bellows seating 12,7 mm (TRW-steering)		RHD	**14142** **357 422 804 C**
2.0 16V, 110 kW	01.94 - 05.97	->Chass. 3A-R-099 264	
2.8 VR6	06.91 - 05.97		
2.9 VR6 Syncro	01.94 - 05.97		

VOLKSWAGEN

PASSAT Variant/Estate/Break (3A5, 35I) 02.88 - 05.97

Spurstange / Tie Rod, steering Achsausführung / Axle Version:TRW Konusmaß [mm] / Cone Size [mm]:14 Rohrdurchmesser am Sitz für Faltenbalg 12,7 mm (TRW-Lenkung) / Tube diameter at bellows seating 12,7 mm (TRW-steering)		LHD	**14493** **357 422 804 B**
2.8 VR6 2.9 VR6 Syncro	06.91 - 05.97 01.94 - 05.97	für / for:ZF ->Chass. 3A-R-099 264	
2.8 VR6 2.9 VR6 Syncro	06.91 - 05.97 01.94 - 05.97	->Chass. 3A-R-099 264	
2.0 16V, 110 kW	01.94 - 05.97	für / for:TRW ->Chass. 3A-R-099 264	
2.0 16V, 110 kW	01.94 - 05.97	->Chass. 3A-R-099-264	
Spurstange / Tie Rod, steering Konusmaß [mm] / Cone Size [mm]:14 Rohr-Ø [mm] / Pipe Ø [mm]:13 mit Zubehör / With accessories Rohrdurchmesser am Sitz für Faltenbalg 15 mm (ZF-Lenkung) / Tube diameter at bellows seating 15 mm (ZF-steering)			**14498** **357 422 803 D**
2.8 VR6	06.91 - 05.97	für / for:ZF Chass. 31-N-255 990 - Chass. 3A-R-099 264	
2.9 VR6 Syncro	01.94 - 05.97	für / for:ZF ->Chass. 3A-R-099 264	
Spurstange / Tie Rod, steering Achsausführung / Axle Version:TRW Rohrdurchmesser am Sitz für Faltenbalg 12,7 mm (TRW-Lenkung) / Tube diameter at bellows seating 12,7 mm (TRW-steering)			**20962** **3A0 422 803 C**
1.8, 55 kW 1.8, 66 kW 2.0, 85 kW 2.0 Syncro 1.9 TD 1.9 TDI, 66 kW	08.90 - 05.97 02.88 - 05.97 02.90 - 05.97 10.90 - 05.97 03.91 - 05.97 10.93 - 05.97	Chass. 3A-R-099 265->	
1.8 G60 Syncro	08.88 - 05.97	10.1993-> Chass. 3A-R-099 265->	
1.6, 74 kW 2.0, 79 kW	07.94 - 12.95 03.95 - 08.96		
Spurstange / Tie Rod, steering Achsausführung / Axle Version:TRW Rohrdurchmesser am Sitz für Faltenbalg 12,7 mm (TRW-Lenkung) / Tube diameter at bellows seating 12,7 mm (TRW-steering)			**20963** **3A0 422 804 C**
1.8, 55 kW 1.8, 66 kW 2.0, 85 kW 2.0 Syncro 1.9 TD 1.9 TDI, 66 kW	08.90 - 05.97 02.88 - 05.97 02.90 - 05.97 10.90 - 05.97 03.91 - 05.97 10.93 - 05.97	Chass. 3A-R-099 265->	
1.8 G60 Syncro	08.88 - 05.97	10.1993-> Chass. 3A-R-099 265->	
1.6, 74 kW 2.0, 79 kW	07.94 - 12.95 03.95 - 08.96		
Spurstange / Tie Rod, steering Achsausführung / Axle Version:ZF mit Zubehör / With accessories			**27657** **3A0 422 803 D** 18374 25295
2.0 16V, 110 kW 2.8 VR6 2.9 VR6 Syncro	01.94 - 05.97 06.91 - 05.97 01.94 - 05.97	Chass. 3A-R-099 265->	
1.9 TDI, 81 kW	03.96 - 05.97		

VOLKSWAGEN

PASSAT Variant/Estate/Break (3A5, 35I) 02.88 - 05.97

Spurstangenkopf / Tie-rod End Befestigungsart: hängend / Fastening Type: Suspended Konusmaß [mm] / Cone Size [mm]:14 Innengewinde [mm] / Inner Thread [mm]:M14x1,5 Gewindeart: mit Rechtsgewinde / Thread Type: with right-hand thread mit Zubehör / With accessories Gewindemaß / Thread Size:M14x1,5			**10249** **191 419 812**
1.6, 53 kW	04.88 - 09.91		
1.6, 55 kW	04.88 - 12.88		
2.0 16V, 100 kW	08.88 - 09.93		
1.6 TD	08.88 - 09.93		
1.9 D	05.89 - 10.93		
1.8	02.88 - 05.97		
1.8 16V	04.88 - 12.89		
2.0, 85 kW	02.90 - 05.97	----------	
2.0 Syncro	10.90 - 05.97		
1.9 TD	03.91 - 05.97	->Chass. 3A-R-099 264	
1.8 G60 Syncro	08.88 - 05.97		
1.9 TDI, 66 kW	10.93 - 05.97	->Chass. 3A-R-099 264	
2.8 VR6	06.91 - 05.97	->Chass. 31-N-255 989	
Spurstangenkopf / Tie-rod End Befestigungsart: hängend / Fastening Type: Suspended Konusmaß [mm] / Cone Size [mm]:14 Innengewinde [mm] / Inner Thread [mm]:M14x1,5 Gewindeart: mit Rechtsgewinde / Thread Type: with right-hand thread mit Zubehör / With accessories Gewindemaß / Thread Size:M14x1,5			**10250** **191 419 811**
1.6, 53 kW	04.88 - 09.91		
1.6, 55 kW	04.88 - 12.88		
2.0 16V, 100 kW	08.88 - 09.93		
1.6 TD	08.88 - 09.93		
1.9 D	05.89 - 10.93		
1.8	02.88 - 05.97		
1.8 16V	04.88 - 12.89		
2.0, 85 kW	02.90 - 05.97	----------	
2.0 Syncro	10.90 - 05.97		
1.9 TD	03.91 - 05.97	->Chass. 3A-R-099 264	
1.8 G60 Syncro	08.88 - 05.97		
1.9 TDI, 66 kW	10.93 - 05.97	->Chass. 3A-R-099 264	
2.8 VR6	06.91 - 05.97	->Chass. 31-N-255 989	
Spurstangenkopf / Tie-rod End Konusmaß [mm] / Cone Size [mm]:14 Innengewinde [mm] / Inner Thread [mm]:M14x1,5 Gewindeart: mit Rechtsgewinde / Thread Type: with right-hand thread für OE / for OE 025 390 138 617 mit Zubehör / With accessories Rohrdurchmesser am Sitz für Faltenbalg 15 mm (ZF-Lenkung) / Tube diameter at bellows seating 15 mm (ZF-steering)			**15762** **357 422 811**
2.8 VR6	06.91 - 05.97	für / for:ZF Chass. 31-N-255 990 - Chass. 3A-R-099 264	
2.9 VR6 Syncro	01.94 - 05.97		
2.0 16V, 110 kW	01.94 - 05.97	->Chass. 3A-R-099 264	

VOLKSWAGEN

PASSAT Variant/Estate/Break (3A5, 35I) 02.88 - 05.97

Spurstangenkopf / Tie-rod End Gewindeart: mit Rechtsgewinde / Thread Type: with right-hand thread mit Zubehör / With accessories			**17642** **3A0 422 812**
1.6, 53 kW	04.88 - 09.91	für / for:TRW Chass. 3A-R-099 265->	
1.6, 55 kW	04.88 - 12.88		
1.6, 74 kW	07.94 - 12.95		
1.8	02.88 - 05.97		
1.8 16V	04.88 - 12.89		
1.8 G60 Syncro	08.88 - 05.97		
2.0, 79 kW	03.95 - 08.96		
2.0, 85 kW	02.90 - 05.97		
2.0 Syncro	10.90 - 05.97		
2.0 16V	08.88 - 05.97		
2.8 VR6	06.91 - 05.97		
2.9 VR6 Syncro	01.94 - 05.97		
1.6 TD	08.88 - 09.93		
1.9 D	05.89 - 10.93		
1.9 TD	03.91 - 05.97		
1.9 TDI, 81 kW	03.96 - 05.97		
Spurstangenkopf / Tie-rod End Gewindeart: mit Rechtsgewinde / Thread Type: with right-hand thread mit Zubehör / With accessories			**18373** **3A0 422 811**
1.6, 53 kW	04.88 - 09.91	für / for:TRW Chass. 3A-R-099 265->	
1.6, 55 kW	04.88 - 12.88		
1.6, 74 kW	07.94 - 12.95		
1.8	02.88 - 05.97		
1.8 16V	04.88 - 12.89		
1.8 G60 Syncro	08.88 - 05.97		
2.0, 79 kW	03.95 - 08.96		
2.0, 85 kW	02.90 - 05.97		
2.0 Syncro	10.90 - 05.97		
2.0 16V	08.88 - 05.97		
2.8 VR6	06.91 - 05.97		
2.9 VR6 Syncro	01.94 - 05.97		
1.6 TD	08.88 - 09.93		
1.9 D	05.89 - 10.93		
1.9 TD	03.91 - 05.97		
1.9 TDI	10.93 - 05.97		
Axialgelenk, Spurstange / Axial Rod, tie rod Gewindemaß / Thread Size:M14x1,5 Gewindeart: mit Rechtsgewinde / Thread Type: with right-hand thread für OE / for OE 025 390 115 617 LH Achsausführung / Axle Version:ZF Rohrdurchmesser am Sitz für Faltenbalg 15 mm (ZF-Lenkung) / Tube diameter at bellows seating 15 mm (ZF-steering)			**10296** **357 422 807 A**
1.6, 53 kW	04.88 - 09.91	für / for:ZF	
1.6, 55 kW	04.88 - 12.88		
1.8	02.88 - 05.97		
1.8 16V	04.88 - 12.89		
2.0, 85 kW	02.90 - 05.97		
2.0 Syncro	10.90 - 05.97		
2.0 16V, 100 kW	08.88 - 09.93		
1.6 TD	08.88 - 09.93		
1.9 D	05.89 - 10.93		
1.9 TD	03.91 - 05.97		
1.8 G60 Syncro	08.88 - 05.97	für / for:ZF ->Chass. 3A-R-099 264	
2.0 16V, 110 kW	01.94 - 05.97		
1.9 TDI, 66 kW	10.93 - 05.97		
2.8 VR6	06.91 - 05.97	für / for:ZF ->Chass. 31-N-255 989	

VOLKSWAGEN

PASSAT Variant/Estate/Break (3A5, 35I) 02.88 - 05.97

Axialgelenk, Spurstange / Axial Rod, tie rod Achsausführung / Axle Version:ZF Gewindeart: mit Rechtsgewinde / Thread Type: with right-hand thread ohne Zubehör / without accessories			**13769**
1.6, 53 kW	04.88 - 09.91	Rohrdurchmesser am Sitz für Faltenbalg 15 mm (ZF-Lenkung) / Tube diameter at bellows seating 15 mm (ZF-steering) Nur in Verbindung mit Faltenbalg 357 422 831 B (ZF) / Only in connection with bellow 357 422 831 B (ZF)	
1.6, 55 kW	04.88 - 12.88		
1.8	02.88 - 05.97		
1.8 16V	04.88 - 12.89		
2.0, 85 kW	02.90 - 05.97		
2.0 Syncro	10.90 - 05.97		
2.0 16V, 100 kW	08.88 - 09.93		
1.6 TD	08.88 - 09.93		
1.9 D	05.89 - 10.93		
1.9 TD	03.91 - 05.97		
Axialgelenk, Spurstange / Axial Rod, tie rod Achsausführung / Axle Version:ZF mit Zubehör / With accessories Rohrdurchmesser am Sitz für Faltenbalg 15 mm (ZF-Lenkung) / Tube diameter at bellows seating 15 mm (ZF-steering)			**25295** **357 422 807 D**
2.8 VR6	06.91 - 05.97	Chass. 31-N-255 990->	
2.0 16V, 110 kW	01.94 - 05.97	Chass. 3A-R-099 265->	
2.9 VR6 Syncro	01.94 - 05.97		
1.9 TDI, 81 kW	03.96 - 05.97		
Lenker, Radaufhängung / Track Control Arm nur in Verbindung mit / Only in connection with:Lemförder 10161 ohne Befestigungsmaterial / without fastening material ohne Trag-/Führungsgelenk / without support/ steering link mit Gummilager / with rubber mounting			**27746** **357 407 151** 10203 10205
1.6, 53 kW	04.88 - 09.91		
1.6, 55 kW	04.88 - 12.88		
1.6, 74 kW	07.94 - 12.95		
1.8	02.88 - 05.97		
1.8 16V	04.88 - 12.89		
1.8 G60 Syncro	08.88 - 05.97		
2.0, 79 kW	03.95 - 08.96		
2.0, 85 kW	02.90 - 05.97		
2.0 Syncro	10.90 - 05.97		
2.0 16V, 100 kW	08.88 - 09.93		
1.6 TD	08.88 - 09.93		
1.9 D	05.89 - 10.93		
1.9 TD	03.91 - 05.97		
1.9 TDI, 66 kW	10.93 - 05.97		
2.8 VR6	06.91 - 05.97	->Chass. 31-N-255 989	
Trag-/Führungsgelenk / Support-/ Steering Link mit Zubehör / With accessories für OE / for OE 191 407 151 B			**10161** **357 407 365**
1.6, 53 kW	04.88 - 09.91		
1.6, 55 kW	04.88 - 12.88		
1.6, 74 kW	07.94 - 12.95		
1.8	02.88 - 05.97		
1.8 16V	04.88 - 12.89		
1.8 G60 Syncro	08.88 - 05.97		
2.0, 79 kW	03.95 - 08.96		
2.0, 85 kW	02.90 - 05.97		
2.0 Syncro	10.90 - 05.97		
2.0 16V, 100 kW	08.88 - 09.93		
1.6 TD	08.88 - 09.93		
1.9 D	05.89 - 10.93		
1.9 TD	03.91 - 05.97		
1.9 TDI	10.93 - 05.97		
Trag-/Führungsgelenk / Support-/ Steering Link Gewindemaß / Thread Size:M12x1,5 Gewindeart: mit Rechtsgewinde / Thread Type: with right-hand thread			**10171** **1H0 407 365**
2.8 VR6	06.91 - 05.97	Chass. 31-N-255 990->	
2.0 16V, 110 kW	01.94 - 05.97		
2.9 VR6 Syncro	01.94 - 05.97		
1.9 TDI, 81 kW	03.96 - 05.97		

VOLKSWAGEN

PASSAT Variant/Estate/Break (3A5, 35I) 02.88 - 05.97

Lagerung, Lenker / Mounting, wishbone		I12/A33	**10203** **357 407 182**
1.6, 53 kW	04.88 - 09.91		
1.6, 55 kW	04.88 - 12.88		
1.6, 74 kW	07.94 - 12.95		
1.8	02.88 - 05.97		
1.8 16V	04.88 - 12.89		
1.8 G60 Syncro	08.88 - 05.97		
2.0, 79 kW	03.95 - 08.96		
2.0, 85 kW	02.90 - 05.97		
2.0 Syncro	10.90 - 05.97		
2.0 16V	08.88 - 05.97		
2.8 VR6	06.91 - 05.97		
2.9 VR6 Syncro	01.94 - 05.97		
1.6 TD	08.88 - 09.93		
1.9 D	05.89 - 10.93		
1.9 TD	03.91 - 05.97		
1.9 TDI	10.93 - 05.97		
Lagerung, Lenker / Mounting, wishbone ohne Montagehülsen / without mounting sleeve			**10205** **191 407 181 E**
1.6, 53 kW	04.88 - 09.91		
1.6, 55 kW	04.88 - 12.88		
1.6, 74 kW	07.94 - 12.95		
1.8	02.88 - 05.97		
1.8 16V	04.88 - 12.89		
1.8 G60 Syncro	08.88 - 05.97		
2.0, 79 kW	03.95 - 08.96		
2.0, 85 kW	02.90 - 05.97		
2.0 Syncro	10.90 - 05.97		
2.0 16V	08.88 - 05.97		
2.8 VR6	06.91 - 05.97		
2.9 VR6 Syncro	01.94 - 05.97		
1.6 TD	08.88 - 09.93		
1.9 D	05.89 - 10.93		
1.9 TD	03.91 - 05.97		
1.9 TDI	10.93 - 05.97		
Lagerung, Lenker / Mounting, wishbone mit Montagehülsen / with mounting sleeve			**25352** **191 407 181 E**
1.6, 53 kW	04.88 - 09.91		
1.6, 55 kW	04.88 - 12.88		
1.6, 74 kW	07.94 - 12.95		
1.8	02.88 - 05.97		
1.8 16V	04.88 - 12.89		
1.8 G60 Syncro	08.88 - 05.97		
2.0, 79 kW	03.95 - 08.96		
2.0, 85 kW	02.90 - 05.97		
2.0 Syncro	10.90 - 05.97		
2.0 16V	08.88 - 05.97		
2.8 VR6	06.91 - 05.97		
2.9 VR6 Syncro	01.94 - 05.97		
1.6 TD	08.88 - 09.93		
1.9 D	05.89 - 10.93		
1.9 TD	03.91 - 05.97		
1.9 TDI	10.93 - 05.97		
Lagerbuchse, Stabilisator / Bushing, stabilizer			**17635** **357 411 329**
1.6, 53 kW	04.88 - 09.91		
1.6, 55 kW	04.88 - 12.88		
1.6, 74 kW	07.94 - 12.95		
1.8	02.88 - 05.97		
1.8 16V	04.88 - 12.89		
1.8 G60 Syncro	08.88 - 05.97		
2.0, 79 kW	03.95 - 08.96		
2.0, 85 kW	02.90 - 05.97		
2.0 Syncro	10.90 - 05.97		
2.0 16V	08.88 - 05.97		
2.8 VR6	06.91 - 05.97		
2.9 VR6 Syncro	01.94 - 05.97		
1.6 TD	08.88 - 09.93		
1.9 D	05.89 - 10.93		
1.9 TD	03.91 - 05.97		
1.9 TDI	10.93 - 05.97		

VOLKSWAGEN

PASSAT Variant/Estate/Break (3A5, 35I) 02.88 - 05.97

Stabilisatorlager / Mounting, Stabilizer			I22,7	**27438** **357 411 313 A**
1.6, 53 kW	04.88 - 09.91			
1.6, 55 kW	04.88 - 12.88			
1.6, 74 kW	07.94 - 12.95			
1.8	02.88 - 05.97			
1.8 16V	04.88 - 12.89			
1.8 G60 Syncro	08.88 - 05.97			
2.0, 79 kW	03.95 - 08.96			
2.0, 85 kW	02.90 - 05.97			
2.0 Syncro	10.90 - 05.97			
2.0 16V	08.88 - 05.97			
2.8 VR6	06.91 - 05.97			
2.9 VR6 Syncro	01.94 - 05.97			
1.6 TD	08.88 - 09.93			
1.9 D	05.89 - 10.93			
1.9 TD	03.91 - 05.97			
1.9 TDI	10.93 - 05.97			
Faltenbalgsatz, Lenkung / Bellow Kit, steering system				**30111** **1H0 422 831 B**
ALL TYPES		für / for:TRW		
Faltenbalgsatz, Lenkung / Bellow Kit, steering system				**30126** **357 422 831 B**
2.8 VR6	06.91 - 05.97	für / for:TRW ->Chass. 3A-R-099 264		
1.6, 74 kW	07.94 - 12.95			
2.0, 79 kW	03.95 - 08.96			
2.9 VR6 Syncro	01.94 - 05.97	für / for:ZF		

Achskörperlager / Mounting, axle body			A56	**10194** **3A0 501 541**
1.6, 53 kW	04.88 - 09.91			
1.6, 55 kW	04.88 - 12.88			
1.6, 74 kW	07.94 - 12.95			
1.8	02.88 - 05.97			
1.8 16V	04.88 - 12.89			
2.0, 79 kW	03.95 - 08.96			
2.0, 85 kW	02.90 - 05.97			
2.0 16V	08.88 - 05.97			
2.8 VR6	06.91 - 05.97			
1.6 TD	08.88 - 09.93			
1.9 D	05.89 - 10.93			
1.9 TD	03.91 - 05.97			
1.9 TDI	10.93 - 05.97			
Achskörperlager / Mounting, axle body mit Zubehör / With accessories			A56	**27682** **3A0 501 541**
1.6, 53 kW	04.88 - 09.91			
1.6, 55 kW	04.88 - 12.88			
1.6, 74 kW	07.94 - 12.95			
1.8	02.88 - 05.97			
1.8 16V	04.88 - 12.89			
2.0, 79 kW	03.95 - 08.96			
2.0, 85 kW	02.90 - 05.97			
2.0 16V	08.88 - 05.97			
2.8 VR6	06.91 - 05.97			
1.6 TD	08.88 - 09.93			
1.9 D	05.89 - 10.93			
1.9 TD	03.91 - 05.97			
1.9 TDI	10.93 - 05.97			

VOLKSWAGEN

PASSAT (3B2) 08.96 - 11.00

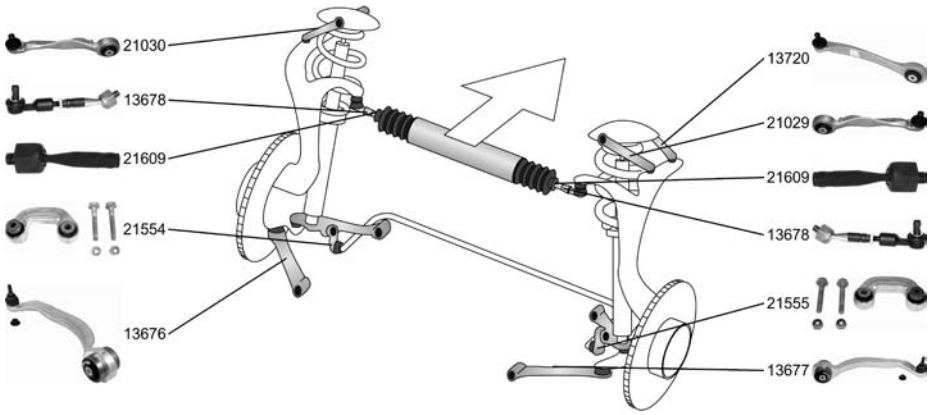

Spurstange / Tie Rod, steering 1.8 T 10.96 - 11.00		**13678** **4B0 419 801 M** 21609 25863
Spurstangenkopf / Tie-rod End Aussengewinde [mm] / Outer Thread [mm]:M14x1,5 Gewindeart: mit Rechtsgewinde / Thread Type: with right-hand thread 1.6 10.96 - 11.00 1.8 10.96 - 11.00 1.8 Syncro/4motion 10.96 - 11.00 1.8 T 10.96 - 11.00 2.0 04.00 - 11.00 2.0 4motion 04.00 - 11.00 2.3 VR5 10.96 - 11.00 2.3 VR5 Syncro/4motion 10.97 - 11.00 2.8 V6, 132 kW 05.97 - 09.99 2.8 V6, 140 kW 09.99 - 11.00 2.8 V6 4motion 09.99 - 11.00 2.8 V6, 142 kW 08.96 - 11.00 2.8 V6 Syncro/4motion 10.96 - 11.00 1.9 TDI, 66 kW 10.96 - 11.00 1.9 TDI, 74 kW 02.00 - 11.00 1.9 TDI, 81 kW 10.96 - 11.00 1.9 TDI Syncro/4motion, 81 kW 10.96 - 11.00 1.9 TDI, 85 kW 08.98 - 11.00 1.9 TDI 4motion 08.99 - 11.00 2.5 TDI, 110 kW 07.98 - 11.00 2.5 TDI Syncro/4motion 12.98 - 11.00		**25863** **4F0 419 811 B**
Axialgelenk, Spurstange / Axial Rod, tie rod Gewindemaß / Thread Size:M14x1,5 Gewindeart: mit Rechtsgewinde / Thread Type: with right-hand thread 1.6 10.96 - 11.00 1.8 10.96 - 11.00 1.8 Syncro/4motion 10.96 - 11.00 1.8 T 10.96 - 11.00 2.0 04.00 - 11.00 2.0 4motion 04.00 - 11.00 2.3 VR5 10.96 - 11.00 2.3 VR5 Syncro/4motion 10.97 - 11.00 2.8 V6, 132 kW 05.97 - 09.99 2.8 V6, 140 kW 09.99 - 11.00 2.8 V6 4motion 09.99 - 11.00 2.8 V6, 142 kW 08.96 - 11.00 2.8 V6 Syncro/4motion 10.96 - 11.00 1.9 TDI, 66 kW 10.96 - 11.00 1.9 TDI, 74 kW 02.00 - 11.00 1.9 TDI, 81 kW 10.96 - 11.00 1.9 TDI Syncro/4motion, 81 kW 10.96 - 11.00 1.9 TDI, 85 kW 08.98 - 11.00 1.9 TDI 4motion 08.99 - 11.00 2.5 TDI, 110 kW 07.98 - 11.00 2.5 TDI Syncro/4motion 12.98 - 11.00		**21609** **4D0 422 821 A**

VOLKSWAGEN

PASSAT (3B2) 08.96 - 11.00

Lenker, Radaufhängung / Track Control Arm
mit Gummilager / with rubber mounting

13673 **4D0 407 151 P**
14540
14541

1.6	10.96 - 11.00	
1.8	10.96 - 11.00	
1.8 Syncro/4motion	10.96 - 11.00	
1.8 T	10.96 - 11.00	
2.0	04.00 - 11.00	
2.0 4motion	04.00 - 11.00	
2.3 VR5	10.96 - 11.00	
2.3 VR5 Syncro/4motion	10.97 - 11.00	
2.8 V6, 132 kW	05.97 - 09.99	
2.8 V6, 140 kW	09.99 - 11.00	
2.8 V6 4motion	09.99 - 11.00	
2.8 V6, 142 kW	08.96 - 11.00	
2.8 V6 Syncro/4motion	10.96 - 11.00	
1.9 TDI, 66 kW	10.96 - 11.00	
1.9 TDI, 74 kW	02.00 - 11.00	
1.9 TDI, 81 kW	10.96 - 11.00	
1.9 TDI Syncro/4motion, 81 kW	10.96 - 11.00	
1.9 TDI 4motion	08.99 - 11.00	
2.5 TDI, 110 kW	07.98 - 11.00	
2.5 TDI Syncro/4motion	12.98 - 11.00	
1.9 TDI, 85 kW	08.98 - 11.00	Mot. AJM

Lenker, Radaufhängung / Track Control Arm
mit Gummilager / with rubber mounting
mit Zubehör / With accessories

13676 **8E0 407 693 Q**
17659

1.6	10.96 - 11.00	
1.8	10.96 - 11.00	
1.8 Syncro/4motion	10.96 - 11.00	
1.8 T	10.96 - 11.00	
2.0	04.00 - 11.00	
2.0 4motion	04.00 - 11.00	
2.3 VR5	10.96 - 11.00	
2.3 VR5 Syncro/4motion	10.97 - 11.00	
2.8 V6, 132 kW	05.97 - 09.99	
2.8 V6, 140 kW	09.99 - 11.00	
2.8 V6 4motion	09.99 - 11.00	
2.8 V6, 142 kW	08.96 - 11.00	
2.8 V6 Syncro/4motion	10.96 - 11.00	
1.9 TDI, 66 kW	10.96 - 11.00	
1.9 TDI, 74 kW	02.00 - 11.00	
1.9 TDI, 81 kW	10.96 - 11.00	
1.9 TDI Syncro/4motion, 81 kW	10.96 - 11.00	
1.9 TDI, 85 kW	08.98 - 11.00	
1.9 TDI 4motion	08.99 - 11.00	
2.5 TDI, 110 kW	07.98 - 11.00	
2.5 TDI Syncro/4motion	12.98 - 11.00	

Lenker, Radaufhängung / Track Control Arm
mit Gummilager / with rubber mounting
mit Zubehör / With accessories

13677 **8E0 407 694 K**
17659

1.6	10.96 - 11.00	
1.8	10.96 - 11.00	
1.8 Syncro/4motion	10.96 - 11.00	
1.8 T	10.96 - 11.00	
2.0	04.00 - 11.00	
2.0 4motion	04.00 - 11.00	
2.3 VR5	10.96 - 11.00	
2.3 VR5 Syncro/4motion	10.97 - 11.00	
2.8 V6, 132 kW	05.97 - 09.99	
2.8 V6, 140 kW	09.99 - 11.00	
2.8 V6 4motion	09.99 - 11.00	
2.8 V6, 142 kW	08.96 - 11.00	
2.8 V6 Syncro/4motion	10.96 - 11.00	
1.9 TDI, 66 kW	10.96 - 11.00	
1.9 TDI, 74 kW	02.00 - 11.00	
1.9 TDI, 81 kW	10.96 - 11.00	
1.9 TDI Syncro/4motion, 81 kW	10.96 - 11.00	
1.9 TDI, 85 kW	08.98 - 11.00	
1.9 TDI 4motion	08.99 - 11.00	
2.5 TDI, 110 kW	07.98 - 11.00	
2.5 TDI Syncro/4motion	12.98 - 11.00	

VOLKSWAGEN

PASSAT (3B2) 08.96 - 11.00

Lenker, Radaufhängung / Track Control Arm
mit Gummilager / with rubber mounting

13719 **8E0 407 505 A**
25909

1.6	10.96 - 11.00
1.8	10.96 - 11.00
1.8 Syncro/4motion	10.96 - 11.00
1.8 T	10.96 - 11.00
2.0	04.00 - 11.00
2.0 4motion	04.00 - 11.00
2.3 VR5	10.96 - 11.00
2.3 VR5 Syncro/4motion	10.97 - 11.00
2.8 V6, 132 kW	05.97 - 09.99
2.8 V6, 140 kW	09.99 - 11.00
2.8 V6 4motion	09.99 - 11.00
2.8 V6, 142 kW	08.96 - 11.00
2.8 V6 Syncro/4motion	10.96 - 11.00
1.9 TDI, 66 kW	10.96 - 11.00
1.9 TDI, 74 kW	02.00 - 11.00
1.9 TDI, 81 kW	10.96 - 11.00
1.9 TDI Syncro/4motion, 81 kW	10.96 - 11.00
1.9 TDI, 85 kW	08.98 - 11.00
1.9 TDI 4motion	08.99 - 11.00
2.5 TDI, 110 kW	07.98 - 11.00
2.5 TDI Syncro/4motion	12.98 - 11.00

Lenker, Radaufhängung / Track Control Arm
mit Gummilager / with rubber mounting

13720 **8E0 407 506 A**
25909

1.6	10.96 - 11.00
1.8	10.96 - 11.00
1.8 Syncro/4motion	10.96 - 11.00
1.8 T	10.96 - 11.00
2.0	04.00 - 11.00
2.0 4motion	04.00 - 11.00
2.3 VR5	10.96 - 11.00
2.3 VR5 Syncro/4motion	10.97 - 11.00
2.8 V6, 132 kW	05.97 - 09.99
2.8 V6, 140 kW	09.99 - 11.00
2.8 V6 4motion	09.99 - 11.00
2.8 V6, 142 kW	08.96 - 11.00
2.8 V6 Syncro/4motion	10.96 - 11.00
1.9 TDI, 66 kW	10.96 - 11.00
1.9 TDI, 74 kW	02.00 - 11.00
1.9 TDI, 81 kW	10.96 - 11.00
1.9 TDI Syncro/4motion, 81 kW	10.96 - 11.00
1.9 TDI, 85 kW	08.98 - 11.00
1.9 TDI 4motion	08.99 - 11.00
2.5 TDI, 110 kW	07.98 - 11.00
2.5 TDI Syncro/4motion	12.98 - 11.00

Lenker, Radaufhängung / Track Control Arm
mit Gummilager / with rubber mounting

21029 **8E0 407 510 A**
25909

1.6	10.96 - 11.00
1.8	10.96 - 11.00
1.8 Syncro/4motion	10.96 - 11.00
1.8 T	10.96 - 11.00
2.0	04.00 - 11.00
2.0 4motion	04.00 - 11.00
2.3 VR5	10.96 - 11.00
2.3 VR5 Syncro/4motion	10.97 - 11.00
2.8 V6, 132 kW	05.97 - 09.99
2.8 V6, 140 kW	09.99 - 11.00
2.8 V6 4motion	09.99 - 11.00
2.8 V6, 142 kW	08.96 - 11.00
2.8 V6 Syncro/4motion	10.96 - 11.00
1.9 TDI, 66 kW	10.96 - 11.00
1.9 TDI, 74 kW	02.00 - 11.00
1.9 TDI, 81 kW	10.96 - 11.00
1.9 TDI Syncro/4motion, 81 kW	10.96 - 11.00
1.9 TDI, 85 kW	08.98 - 11.00
1.9 TDI 4motion	08.99 - 11.00
2.5 TDI, 110 kW	07.98 - 11.00
2.5 TDI Syncro/4motion	12.98 - 11.00

VOLKSWAGEN

PASSAT (3B2) 08.96 - 11.00

Lenker, Radaufhängung / Track Control Arm mit Gummilager / with rubber mounting			**21030** 25909	**8E0 407 509 A**
1.6	10.96 - 11.00			
1.8	10.96 - 11.00			
1.8 Syncro/4motion	10.96 - 11.00			
1.8 T	10.96 - 11.00			
2.0	04.00 - 11.00			
2.0 4motion	04.00 - 11.00			
2.3 VR5	10.96 - 11.00			
2.3 VR5 Syncro/4motion	10.97 - 11.00			
2.8 V6, 132 kW	05.97 - 09.99			
2.8 V6, 140 kW	09.99 - 11.00			
2.8 V6 4motion	09.99 - 11.00			
2.8 V6, 142 kW	08.96 - 11.00			
2.8 V6 Syncro/4motion	10.96 - 11.00			
1.9 TDI, 66 kW	10.96 - 11.00			
1.9 TDI, 74 kW	02.00 - 11.00			
1.9 TDI, 81 kW	10.96 - 11.00			
1.9 TDI Syncro/4motion, 81 kW	10.96 - 11.00			
1.9 TDI, 85 kW	08.98 - 11.00			
1.9 TDI 4motion	08.99 - 11.00			
2.5 TDI, 110 kW	07.98 - 11.00			
2.5 TDI Syncro/4motion	12.98 - 11.00			
Lagerung, Lenker / Mounting, wishbone		I12/A40	**14540**	**4D0 407 181 H**
ALL TYPES				
Lagerung, Lenker / Mounting, wishbone		I12/A50	**14541**	**4D0 407 182 E**
ALL TYPES				
Lagerung, Lenker / Mounting, wishbone		I12/A65	**17659**	**4D0 407 183 S**
ALL TYPES				
Lagerung, Lenker / Mounting, wishbone		I10/A46	**17661**	**4D0 407 515 C**
1.6	10.96 - 11.00	->08.1998		
1.8	10.96 - 11.00	->Chass. 3B-XE113 734		
1.8 Syncro/4motion	10.96 - 11.00			
1.8 T	10.96 - 11.00			
2.3 VR5	10.96 - 11.00			
2.3 VR5 Syncro/4motion	10.97 - 11.00			
2.8 V6, 132 kW	05.97 - 09.99			
2.8 V6, 142 kW	08.96 - 11.00			
2.8 V6 Syncro/4motion	10.96 - 11.00			
1.9 TDI, 66 kW	10.96 - 11.00			
1.9 TDI, 81 kW	10.96 - 11.00			
1.9 TDI Syncro/4motion, 81 kW	10.96 - 11.00			

VOLKSWAGEN

PASSAT (3B2) 08.96 - 11.00

Lagerung, Lenker / Mounting, wishbone			**25909** **4B0 407 515**
1.6	10.96 - 11.00	07.1998->	
1.8	10.96 - 11.00	Chass. 3B-XE-113 735->	
1.8 Syncro/4motion	10.96 - 11.00		
1.8 T	10.96 - 11.00		
2.3 VR5	10.96 - 11.00		
2.3 VR5 Syncro/4motion	10.97 - 11.00		
2.8 V6, 132 kW	05.97 - 09.99		
2.8 V6, 142 kW	08.96 - 11.00		
2.8 V6 Syncro/4motion	10.96 - 11.00		
1.9 TDI, 66 kW	10.96 - 11.00		
1.9 TDI, 81 kW	10.96 - 11.00		
1.9 TDI Syncro/4motion, 81 kW	10.96 - 11.00		
2.0	04.00 - 11.00		
2.0 4motion	04.00 - 11.00		
2.8 V6, 140 kW	09.99 - 11.00		
2.8 V6, 142 kW	01.99 - 11.00		
2.8 V6 4motion	09.99 - 11.00		
1.9 TDI, 74 kW	02.00 - 11.00		
1.9 TDI, 85 kW	08.98 - 11.00		
1.9 TDI 4motion	08.99 - 11.00		
2.5 TDI, 110 kW	07.98 - 11.00		
2.5 TDI Syncro/4motion	12.98 - 11.00		
Reparatursatz, Querlenker / Repair Kit, wishbone arm			**27421** **8D0 498 998**
1.6	10.96 - 11.00		
1.8	10.96 - 11.00		
1.8 Syncro/4motion	10.96 - 11.00		
1.8 T	10.96 - 11.00		
2.0	04.00 - 11.00		
2.0 4motion	04.00 - 11.00		
2.3 VR5	10.96 - 11.00		
2.3 VR5 Syncro/4motion	10.97 - 11.00		
2.8 V6, 132 kW	05.97 - 09.99		
2.8 V6, 140 kW	09.99 - 11.00		
2.8 V6 4motion	09.99 - 11.00		
2.8 V6, 142 kW	08.96 - 11.00		
2.8 V6 Syncro/4motion	10.96 - 11.00		
1.9 TDI, 66 kW	10.96 - 11.00		
1.9 TDI, 74 kW	02.00 - 11.00		
1.9 TDI, 81 kW	10.96 - 11.00		
1.9 TDI Syncro/4motion, 81 kW	10.96 - 11.00		
1.9 TDI, 85 kW	08.98 - 11.00		
1.9 TDI 4motion	08.99 - 11.00		
2.5 TDI, 110 kW	07.98 - 11.00		
2.5 TDI Syncro/4motion	12.98 - 11.00		
Stange/Strebe, Stabilisator / Rod/Strut, stabiliser Pendelstange / Suspension Rod mit Zubehör / With accessories			**21554** **8D0 411 317 D**
1.6	10.96 - 11.00		
1.8	10.96 - 11.00		
1.8 Syncro/4motion	10.96 - 11.00		
1.8 T	10.96 - 11.00		
2.0	04.00 - 11.00		
2.0 4motion	04.00 - 11.00		
2.3 VR5	10.96 - 11.00		
2.3 VR5 Syncro/4motion	10.97 - 11.00		
2.8 V6, 132 kW	05.97 - 09.99		
2.8 V6, 140 kW	09.99 - 11.00		
2.8 V6 4motion	09.99 - 11.00		
2.8 V6, 142 kW	08.96 - 11.00		
2.8 V6 Syncro/4motion	10.96 - 11.00		
1.9 TDI, 66 kW	10.96 - 11.00		
1.9 TDI, 74 kW	02.00 - 11.00		
1.9 TDI, 81 kW	10.96 - 11.00		
1.9 TDI Syncro/4motion, 81 kW	10.96 - 11.00		
1.9 TDI, 85 kW	08.98 - 11.00		
1.9 TDI 4motion	08.99 - 11.00		
2.5 TDI, 110 kW	07.98 - 11.00		
2.5 TDI Syncro/4motion	12.98 - 11.00		

VOLKSWAGEN

PASSAT (3B2) 08.96 - 11.00

Stange/Strebe, Stabilisator / Rod/Strut, stabiliser Pendelstange / Suspension Rod mit Zubehör / With accessories			**21555** **8D0 411 318 D**
1.6	10.96 - 11.00		
1.8	10.96 - 11.00		
1.8 Syncro/4motion	10.96 - 11.00		
1.8 T	10.96 - 11.00		
2.0	04.00 - 11.00		
2.0 4motion	04.00 - 11.00		
2.3 VR5	10.96 - 11.00		
2.3 VR5 Syncro/4motion	10.97 - 11.00		
2.8 V6, 132 kW	05.97 - 09.99		
2.8 V6, 140 kW	09.99 - 11.00		
2.8 V6 4motion	09.99 - 11.00		
2.8 V6, 142 kW	08.96 - 11.00		
2.8 V6 Syncro/4motion	10.96 - 11.00		
1.9 TDI, 66 kW	10.96 - 11.00		
1.9 TDI, 74 kW	02.00 - 11.00		
1.9 TDI, 81 kW	10.96 - 11.00		
1.9 TDI Syncro/4motion, 81 kW	10.96 - 11.00		
1.9 TDI, 85 kW	08.98 - 11.00		
1.9 TDI 4motion	08.99 - 11.00		
2.5 TDI, 110 kW	07.98 - 11.00		
2.5 TDI Syncro/4motion	12.98 - 11.00		
Stabilisatorlager / Mounting, Stabilizer			**21304** **4D0 411 327 G**
1.6	10.96 - 11.00		
1.8	10.96 - 11.00		
1.8 T	10.96 - 11.00		
2.0	04.00 - 11.00		
2.3 VR5	10.96 - 11.00		
2.8 V6, 132 kW	05.97 - 09.99		
2.8 V6, 140 kW	09.99 - 11.00		
2.8 V6, 142 kW	08.96 - 11.00		
1.9 TDI, 66 kW	10.96 - 11.00		
1.9 TDI, 74 kW	02.00 - 11.00		
1.9 TDI, 81 kW	10.96 - 11.00		
1.9 TDI, 85 kW	08.98 - 11.00		
2.5 TDI, 110 kW	07.98 - 11.00		
Stabilisatorlager / Mounting, Stabilizer		27	**22304** **4D0 411 327 H**
1.8 T	10.96 - 11.00	für Fahrzeuge mit Sportfahrwerk / for vehicles with sports suspension	
Faltenbalgsatz, Lenkung / Bellow Kit, steering system			**30159** **8D0 419 831 J**
1.6	10.96 - 11.00	->02.1999 ->Chass. 3B-X-400 000	
1.8, 92 kW	10.96 - 11.00		
1.8 Syncro/4motion	10.96 - 11.00		
1.8 T	10.96 - 11.00		
1.9 TDI, 66 kW	10.96 - 11.00		
1.9 TDI, 81 kW	10.96 - 11.00		
1.9 TDI Syncro/4motion, 81 kW	10.96 - 11.00		
1.9 TDI, 85 kW	08.98 - 11.00		
Faltenbalgsatz, Lenkung / Bellow Kit, steering system			**30178** **4D0 419 831 D**
1.6	10.96 - 11.00	->02.1999 ->Chass. 3B-X-400 000	
1.8, 92 kW	10.96 - 11.00		
1.8 Syncro/4motion	10.96 - 11.00		
1.8 T	10.96 - 11.00		
1.9 TDI, 66 kW	10.96 - 11.00		
1.9 TDI, 81 kW	10.96 - 11.00		
1.9 TDI Syncro/4motion, 81 kW	10.96 - 11.00		
1.9 TDI, 85 kW	08.98 - 11.00		
2.3 VR5	10.96 - 11.00	->02.1999 ->Chass. 3B-X-400 000	
2.3 VR5 Syncro/4motion	10.97 - 11.00		
2.8 V6, 142 kW	08.96 - 11.00		
2.8 V6 Syncro/4motion	10.96 - 11.00		
2.5 TDI, 110 kW	07.98 - 11.00		
2.5 TDI Syncro/4motion	12.98 - 11.00		

VOLKSWAGEN

PASSAT (3B2) 08.96 - 11.00

Stange/Strebe, Stabilisator / Rod/Strut, stabiliser
Pendelstange / Suspension Rod
mit Zubehör / With accessories

(x2)

24637 **8E0 505 465 D**

1.8 Syncro/4motion	10.96 - 11.00
2.0 4motion	04.00 - 11.00
2.3 VR5 Syncro/4motion	10.97 - 11.00
2.8 V6 4motion	09.99 - 11.00
2.8 V6 Syncro/4motion	10.96 - 11.00
1.9 TDI Syncro/4motion, 81 kW	10.96 - 11.00
1.9 TDI 4motion	08.99 - 11.00
2.5 TDI Syncro/4motion	12.98 - 11.00

PASSAT Variant/Estate/Break (3B5) 06.97 - 11.00

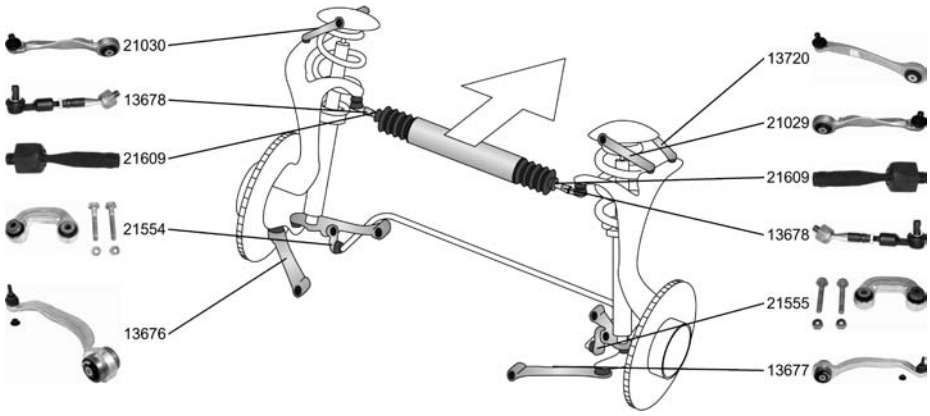

Spurstange / Tie Rod, steering

13678 **4B0 419 801 M**
21609
25863

1.6	06.97 - 11.00
1.8	06.97 - 11.00
1.8 Syncro/4motion	06.97 - 11.00
1.8 T	06.97 - 11.00
2.0	04.00 - 11.00
2.0 4motion	04.00 - 11.00
2.3 VR5	06.97 - 11.00
2.3 VR5 Syncro/4motion	10.97 - 11.00
2.8 V6 4motion	09.99 - 11.00
2.8 V6	06.97 - 11.00
2.8 V6 Syncro/4motion	06.97 - 11.00
1.9 TDI, 66 kW	06.97 - 11.00
1.9 TDI, 74 kW	02.00 - 11.00
1.9 TDI, 81 kW	06.97 - 11.00
1.9 TDI Syncro/4motion	06.97 - 11.00
1.9 TDI, 85 kW	08.98 - 11.00
1.9 TDI 4motion, 85 kW	08.99 - 11.00
2.5 TDI, 110 kW	07.98 - 11.00
2.5 TDI Syncro/4motion	12.98 - 11.00

Spurstangenkopf / Tie-rod End
Aussengewinde [mm] / Outer Thread [mm]:M14x1,5
Gewindeart: mit Rechtsgewinde / Thread Type: with right-hand thread

25863 **4F0 419 811 B**

1.6	06.97 - 11.00
1.8	06.97 - 11.00
1.8 Syncro/4motion	06.97 - 11.00
1.8 T	06.97 - 11.00
2.0	04.00 - 11.00
2.0 4motion	04.00 - 11.00
2.3 VR5	06.97 - 11.00
2.3 VR5 Syncro/4motion	10.97 - 11.00
2.8 V6 4motion	09.99 - 11.00
2.8 V6	06.97 - 11.00
2.8 V6 Syncro/4motion	06.97 - 11.00
1.9 TDI, 66 kW	06.97 - 11.00
1.9 TDI, 74 kW	02.00 - 11.00
1.9 TDI, 81 kW	06.97 - 11.00
1.9 TDI Syncro/4motion	06.97 - 11.00
1.9 TDI, 85 kW	08.98 - 11.00
1.9 TDI 4motion, 85 kW	08.99 - 11.00
2.5 TDI, 110 kW	07.98 - 11.00
2.5 TDI Syncro/4motion	12.98 - 11.00

VOLKSWAGEN

PASSAT Variant/Estate/Break (3B5) 06.97 - 11.00

Axialgelenk, Spurstange / Axial Rod, tie rod
Gewindemaß / Thread Size:M14x1,5
Gewindeart: mit Rechtsgewinde / Thread Type: with right-hand thread

21609 **4D0 422 821 A**

1.6	06.97 - 11.00
1.8	06.97 - 11.00
1.8 Syncro/4motion	06.97 - 11.00
1.8 T	06.97 - 11.00
2.0	04.00 - 11.00
2.0 4motion	04.00 - 11.00
2.3 VR5	06.97 - 11.00
2.3 VR5 Syncro/4motion	10.97 - 11.00
2.8 V6 4motion	09.99 - 11.00
2.8 V6	06.97 - 11.00
2.8 V6 Syncro/4motion	06.97 - 11.00
1.9 TDI, 66 kW	06.97 - 11.00
1.9 TDI, 74 kW	02.00 - 11.00
1.9 TDI, 81 kW	06.97 - 11.00
1.9 TDI Syncro/4motion	06.97 - 11.00
1.9 TDI, 85 kW	08.98 - 11.00
1.9 TDI 4motion, 85 kW	08.99 - 11.00
2.5 TDI, 110 kW	07.98 - 11.00
2.5 TDI Syncro/4motion	12.98 - 11.00

Lenker, Radaufhängung / Track Control Arm
mit Gummilager / with rubber mounting

13673 **4D0 407 151 P**
14540
14541

1.6	06.97 - 11.00
1.8	06.97 - 11.00
1.8 Syncro/4motion	06.97 - 11.00
1.8 T	06.97 - 11.00
2.0	04.00 - 11.00
2.0 4motion	04.00 - 11.00
2.3 VR5	06.97 - 11.00
2.3 VR5 Syncro/4motion	10.97 - 11.00
2.8 V6 4motion	09.99 - 11.00
2.8 V6	06.97 - 11.00
2.8 V6 Syncro/4motion	06.97 - 11.00
1.9 TDI, 66 kW	06.97 - 11.00
1.9 TDI, 74 kW	02.00 - 11.00
1.9 TDI, 81 kW	06.97 - 11.00
1.9 TDI Syncro/4motion	06.97 - 11.00
1.9 TDI, 85 kW	08.98 - 11.00
1.9 TDI 4motion, 85 kW	08.99 - 11.00
2.5 TDI, 110 kW	07.98 - 11.00
2.5 TDI Syncro/4motion	12.98 - 11.00

Lenker, Radaufhängung / Track Control Arm
mit Gummilager / with rubber mounting
mit Zubehör / With accessories

13676 **8E0 407 693 Q**
17659

1.6	06.97 - 11.00
1.8	06.97 - 11.00
1.8 Syncro/4motion	06.97 - 11.00
1.8 T	06.97 - 11.00
2.0	04.00 - 11.00
2.0 4motion	04.00 - 11.00
2.3 VR5	06.97 - 11.00
2.3 VR5 Syncro/4motion	10.97 - 11.00
2.8 V6 4motion	09.99 - 11.00
2.8 V6	06.97 - 11.00
2.8 V6 Syncro/4motion	06.97 - 11.00
1.9 TDI, 66 kW	06.97 - 11.00
1.9 TDI, 74 kW	02.00 - 11.00
1.9 TDI, 81 kW	06.97 - 11.00
1.9 TDI Syncro/4motion	06.97 - 11.00
1.9 TDI, 85 kW	08.98 - 11.00
1.9 TDI 4motion, 85 kW	08.99 - 11.00
2.5 TDI, 110 kW	07.98 - 11.00
2.5 TDI Syncro/4motion	12.98 - 11.00

VOLKSWAGEN

PASSAT Variant/Estate/Break (3B5) 06.97 - 11.00

Lenker, Radaufhängung / Track Control Arm
mit Gummilager / with rubber mounting
mit Zubehör / With accessories

13677 **8E0 407 694 K**
17659

1.6	06.97 - 11.00
1.8	06.97 - 11.00
1.8 Syncro/4motion	06.97 - 11.00
1.8 T	06.97 - 11.00
2.0	04.00 - 11.00
2.0 4motion	04.00 - 11.00
2.3 VR5	06.97 - 11.00
2.3 VR5 Syncro/4motion	10.97 - 11.00
2.8 V6 4motion	09.99 - 11.00
2.8 V6	06.97 - 11.00
2.8 V6 Syncro/4motion	06.97 - 11.00
1.9 TDI, 66 kW	06.97 - 11.00
1.9 TDI, 74 kW	02.00 - 11.00
1.9 TDI, 81 kW	06.97 - 11.00
1.9 TDI Syncro/4motion	06.97 - 11.00
1.9 TDI, 85 kW	08.98 - 11.00
1.9 TDI 4motion, 85 kW	08.99 - 11.00
2.5 TDI, 110 kW	07.98 - 11.00
2.5 TDI Syncro/4motion	12.98 - 11.00

Lenker, Radaufhängung / Track Control Arm
mit Gummilager / with rubber mounting

13719 **8E0 407 505 A**
25909

1.6	06.97 - 11.00
1.8	06.97 - 11.00
1.8 Syncro/4motion	06.97 - 11.00
1.8 T	06.97 - 11.00
2.0	04.00 - 11.00
2.0 4motion	04.00 - 11.00
2.3 VR5	06.97 - 11.00
2.3 VR5 Syncro/4motion	10.97 - 11.00
2.8 V6 4motion	09.99 - 11.00
2.8 V6	06.97 - 11.00
2.8 V6 Syncro/4motion	06.97 - 11.00
1.9 TDI, 66 kW	06.97 - 11.00
1.9 TDI, 74 kW	02.00 - 11.00
1.9 TDI, 81 kW	06.97 - 11.00
1.9 TDI Syncro/4motion	06.97 - 11.00
1.9 TDI, 85 kW	08.98 - 11.00
1.9 TDI 4motion, 85 kW	08.99 - 11.00
2.5 TDI, 110 kW	07.98 - 11.00
2.5 TDI Syncro/4motion	12.98 - 11.00

Lenker, Radaufhängung / Track Control Arm
mit Gummilager / with rubber mounting

13720 **8E0 407 506 A**
25909

1.6	06.97 - 11.00
1.8	06.97 - 11.00
1.8 Syncro/4motion	06.97 - 11.00
1.8 T	06.97 - 11.00
2.0	04.00 - 11.00
2.0 4motion	04.00 - 11.00
2.3 VR5	06.97 - 11.00
2.3 VR5 Syncro/4motion	10.97 - 11.00
2.8 V6 4motion	09.99 - 11.00
2.8 V6	06.97 - 11.00
2.8 V6 Syncro/4motion	06.97 - 11.00
1.9 TDI, 66 kW	06.97 - 11.00
1.9 TDI, 74 kW	02.00 - 11.00
1.9 TDI, 81 kW	06.97 - 11.00
1.9 TDI Syncro/4motion	06.97 - 11.00
1.9 TDI, 85 kW	08.98 - 11.00
1.9 TDI 4motion, 85 kW	08.99 - 11.00
2.5 TDI, 110 kW	07.98 - 11.00
2.5 TDI Syncro/4motion	12.98 - 11.00

VOLKSWAGEN

PASSAT Variant/Estate/Break (3B5) 06.97 - 11.00

Lenker, Radaufhängung / Track Control Arm mit Gummilager / with rubber mounting			**21029** 8E0 407 510 A 25909
1.6	06.97 - 11.00		
1.8	06.97 - 11.00		
1.8 Syncro/4motion	06.97 - 11.00		
1.8 T	06.97 - 11.00		
2.0	04.00 - 11.00		
2.0 4motion	04.00 - 11.00		
2.3 VR5	06.97 - 11.00		
2.3 VR5 Syncro/4motion	10.97 - 11.00		
2.8 V6 4motion	09.99 - 11.00		
2.8 V6	06.97 - 11.00		
2.8 V6 Syncro/4motion	06.97 - 11.00		
1.9 TDI, 66 kW	06.97 - 11.00		
1.9 TDI, 74 kW	02.00 - 11.00		
1.9 TDI, 81 kW	06.97 - 11.00		
1.9 TDI Syncro/4motion	06.97 - 11.00		
1.9 TDI, 85 kW	08.98 - 11.00		
1.9 TDI 4motion, 85 kW	08.99 - 11.00		
2.5 TDI, 110 kW	07.98 - 11.00		
2.5 TDI Syncro/4motion	12.98 - 11.00		
Lenker, Radaufhängung / Track Control Arm mit Gummilager / with rubber mounting			**21030** 8E0 407 509 A 25909
1.6	06.97 - 11.00		
1.8	06.97 - 11.00		
1.8 Syncro/4motion	06.97 - 11.00		
1.8 T	06.97 - 11.00		
2.0	04.00 - 11.00		
2.0 4motion	04.00 - 11.00		
2.3 VR5	06.97 - 11.00		
2.3 VR5 Syncro/4motion	10.97 - 11.00		
2.8 V6 4motion	09.99 - 11.00		
2.8 V6	06.97 - 11.00		
2.8 V6 Syncro/4motion	06.97 - 11.00		
1.9 TDI, 66 kW	06.97 - 11.00		
1.9 TDI, 74 kW	02.00 - 11.00		
1.9 TDI, 81 kW	06.97 - 11.00		
1.9 TDI Syncro/4motion	06.97 - 11.00		
1.9 TDI, 85 kW	08.98 - 11.00		
1.9 TDI 4motion, 85 kW	08.99 - 11.00		
2.5 TDI, 110 kW	07.98 - 11.00		
2.5 TDI Syncro/4motion	12.98 - 11.00		
Lagerung, Lenker / Mounting, wishbone		I12/A40	**14540** 4D0 407 181 H
1.6	06.97 - 11.00		
1.8	06.97 - 11.00		
1.8 Syncro/4motion	06.97 - 11.00		
1.8 T	06.97 - 11.00		
2.0	04.00 - 11.00		
2.0 4motion	04.00 - 11.00		
2.3 VR5	06.97 - 11.00		
2.3 VR5 Syncro/4motion	10.97 - 11.00		
2.8 V6 4motion	09.99 - 11.00		
2.8 V6	06.97 - 11.00		
2.8 V6 Syncro/4motion	06.97 - 11.00		
1.9 TDI, 66 kW	06.97 - 11.00		
1.9 TDI, 74 kW	02.00 - 11.00		
1.9 TDI, 81 kW	06.97 - 11.00		
1.9 TDI Syncro/4motion	06.97 - 11.00		
1.9 TDI, 85 kW	08.98 - 11.00		
1.9 TDI 4motion, 85 kW	08.99 - 11.00		
2.5 TDI, 110 kW	07.98 - 11.00		
2.5 TDI Syncro/4motion	12.98 - 11.00		

VOLKSWAGEN

PASSAT Variant/Estate/Break (3B5) 06.97 - 11.00

Lagerung, Lenker / Mounting, wishbone

I12/A50 — **14541** — **4D0 407 182 E**

1.6	06.97 - 11.00
1.8	06.97 - 11.00
1.8 Syncro/4motion	06.97 - 11.00
1.8 T	06.97 - 11.00
2.0	04.00 - 11.00
2.0 4motion	04.00 - 11.00
2.3 VR5	06.97 - 11.00
2.3 VR5 Syncro/4motion	10.97 - 11.00
2.8 V6 4motion	09.99 - 11.00
2.8 V6	06.97 - 11.00
2.8 V6 Syncro/4motion	06.97 - 11.00
1.9 TDI, 66 kW	06.97 - 11.00
1.9 TDI, 74 kW	02.00 - 11.00
1.9 TDI, 81 kW	06.97 - 11.00
1.9 TDI Syncro/4motion	06.97 - 11.00
1.9 TDI, 85 kW	08.98 - 11.00
1.9 TDI 4motion, 85 kW	08.99 - 11.00
2.5 TDI, 110 kW	07.98 - 11.00
2.5 TDI Syncro/4motion	12.98 - 11.00

Lagerung, Lenker / Mounting, wishbone

I12/A65 — **17659** — **4D0 407 183 S**

1.6	06.97 - 11.00
1.8	06.97 - 11.00
1.8 Syncro/4motion	06.97 - 11.00
1.8 T	06.97 - 11.00
2.0	04.00 - 11.00
2.0 4motion	04.00 - 11.00
2.3 VR5	06.97 - 11.00
2.3 VR5 Syncro/4motion	10.97 - 11.00
2.8 V6 4motion	09.99 - 11.00
2.8 V6	06.97 - 11.00
2.8 V6 Syncro/4motion	06.97 - 11.00
1.9 TDI, 66 kW	06.97 - 11.00
1.9 TDI, 74 kW	02.00 - 11.00
1.9 TDI, 81 kW	06.97 - 11.00
1.9 TDI Syncro/4motion	06.97 - 11.00
1.9 TDI, 85 kW	08.98 - 11.00
1.9 TDI 4motion, 85 kW	08.99 - 11.00
2.5 TDI, 110 kW	07.98 - 11.00
2.5 TDI Syncro/4motion	12.98 - 11.00

Lagerung, Lenker / Mounting, wishbone

I10/A46 — **17661** — **4D0 407 515 C**

1.6	06.97 - 11.00	->08.1998
1.8, 92 kW	06.97 - 11.00	->Chass. 3B-XE113 734
1.8 Syncro/4motion	06.97 - 11.00	
1.8 T	06.97 - 11.00	
2.3 VR5	06.97 - 11.00	
2.3 VR5 Syncro/4motion	10.97 - 11.00	
2.8 V6, 142 kW	06.97 - 11.00	
2.8 V6 Syncro/4motion	06.97 - 11.00	
1.9 TDI, 66 kW	06.97 - 11.00	
1.9 TDI, 81 kW	06.97 - 11.00	
1.9 TDI Syncro/4motion	06.97 - 11.00	
1.9 TDI, 85 kW	08.98 - 11.00	

Lagerung, Lenker / Mounting, wishbone

25909 — **4B0 407 515**

1.6	06.97 - 11.00
1.8	06.97 - 11.00
1.8 Syncro/4motion	06.97 - 11.00
1.8 T	06.97 - 11.00
2.0	04.00 - 11.00
2.0 4motion	04.00 - 11.00
2.3 VR5	06.97 - 11.00
2.3 VR5 Syncro/4motion	10.97 - 11.00
2.8 V6 4motion	09.99 - 11.00
2.8 V6	06.97 - 11.00
2.8 V6 Syncro/4motion	06.97 - 11.00
1.9 TDI, 66 kW	06.97 - 11.00
1.9 TDI, 74 kW	02.00 - 11.00
1.9 TDI, 81 kW	06.97 - 11.00
1.9 TDI Syncro/4motion	06.97 - 11.00
1.9 TDI, 85 kW	08.98 - 11.00
1.9 TDI 4motion, 85 kW	08.99 - 11.00
2.5 TDI, 110 kW	07.98 - 11.00
2.5 TDI Syncro/4motion	12.98 - 11.00

VOLKSWAGEN

PASSAT Variant/Estate/Break (3B5) 06.97 - 11.00

Reparatursatz, Querlenker / Repair Kit, wishbone arm			**27421** **8D0 498 998**
1.6	06.97 - 11.00		
1.8	06.97 - 11.00		
1.8 Syncro/4motion	06.97 - 11.00		
1.8 T	06.97 - 11.00		
2.0	04.00 - 11.00		
2.0 4motion	04.00 - 11.00		
2.3 VR5	06.97 - 11.00		
2.3 VR5 Syncro/4motion	10.97 - 11.00		
2.8 V6 4motion	09.99 - 11.00		
2.8 V6	06.97 - 11.00		
2.8 V6 Syncro/4motion	06.97 - 11.00		
1.9 TDI, 66 kW	06.97 - 11.00		
1.9 TDI, 74 kW	02.00 - 11.00		
1.9 TDI, 81 kW	06.97 - 11.00		
1.9 TDI Syncro/4motion	06.97 - 11.00		
1.9 TDI, 85 kW	08.98 - 11.00		
1.9 TDI 4motion, 85 kW	08.99 - 11.00		
2.5 TDI, 110 kW	07.98 - 11.00		
2.5 TDI Syncro/4motion	12.98 - 11.00		
Stange/Strebe, Stabilisator / Rod/Strut, stabiliser Pendelstange / Suspension Rod mit Zubehör / With accessories			**21554** **8D0 411 317 D**
1.6	06.97 - 11.00		
1.8	06.97 - 11.00		
1.8 Syncro/4motion	06.97 - 11.00		
1.8 T	06.97 - 11.00		
2.0	04.00 - 11.00		
2.0 4motion	04.00 - 11.00		
2.3 VR5	06.97 - 11.00		
2.3 VR5 Syncro/4motion	10.97 - 11.00		
2.8 V6 4motion	09.99 - 11.00		
2.8 V6	06.97 - 11.00		
2.8 V6 Syncro/4motion	06.97 - 11.00		
1.9 TDI, 66 kW	06.97 - 11.00		
1.9 TDI, 74 kW	02.00 - 11.00		
1.9 TDI, 81 kW	06.97 - 11.00		
1.9 TDI Syncro/4motion	06.97 - 11.00		
1.9 TDI, 85 kW	08.98 - 11.00		
1.9 TDI 4motion, 85 kW	08.99 - 11.00		
2.5 TDI, 110 kW	07.98 - 11.00		
2.5 TDI Syncro/4motion	12.98 - 11.00		
Stange/Strebe, Stabilisator / Rod/Strut, stabiliser Pendelstange / Suspension Rod mit Zubehör / With accessories			**21555** **8D0 411 318 D**
1.6	06.97 - 11.00		
1.8	06.97 - 11.00		
1.8 Syncro/4motion	06.97 - 11.00		
1.8 T	06.97 - 11.00		
2.0	04.00 - 11.00		
2.0 4motion	04.00 - 11.00		
2.3 VR5	06.97 - 11.00		
2.3 VR5 Syncro/4motion	10.97 - 11.00		
2.8 V6 4motion	09.99 - 11.00		
2.8 V6	06.97 - 11.00		
2.8 V6 Syncro/4motion	06.97 - 11.00		
1.9 TDI, 66 kW	06.97 - 11.00		
1.9 TDI, 74 kW	02.00 - 11.00		
1.9 TDI, 81 kW	06.97 - 11.00		
1.9 TDI Syncro/4motion	06.97 - 11.00		
1.9 TDI, 85 kW	08.98 - 11.00		
1.9 TDI 4motion, 85 kW	08.99 - 11.00		
2.5 TDI, 110 kW	07.98 - 11.00		
2.5 TDI Syncro/4motion	12.98 - 11.00		

VOLKSWAGEN

PASSAT Variant/Estate/Break (3B5) 06.97 - 11.00

Stabilisatorlager / Mounting, Stabilizer

27 | 22304 | 4D0 411 327 H

1.6	06.97 - 11.00
1.8	06.97 - 11.00
1.8 Syncro/4motion	06.97 - 11.00
1.8 T	06.97 - 11.00
2.0	04.00 - 11.00
2.0 4motion	04.00 - 11.00
2.3 VR5	06.97 - 11.00
2.3 VR5 Syncro/4motion	10.97 - 11.00
2.8 V6 4motion	09.99 - 11.00
2.8 V6	06.97 - 11.00
2.8 V6 Syncro/4motion	06.97 - 11.00
1.9 TDI, 66 kW	06.97 - 11.00
1.9 TDI, 74 kW	02.00 - 11.00
1.9 TDI, 81 kW	06.97 - 11.00
1.9 TDI Syncro/4motion	06.97 - 11.00
1.9 TDI, 85 kW	08.98 - 11.00
1.9 TDI 4motion, 85 kW	08.99 - 11.00
2.5 TDI, 110 kW	07.98 - 11.00
2.5 TDI Syncro/4motion	12.98 - 11.00

Faltenbalgsatz, Lenkung / Bellow Kit, steering system

30159 | 8D0 419 831 J

1.6	06.97 - 11.00	->02.1999
1.8, 92 kW	06.97 - 11.00	->Chass. 3B-X-400 000
1.8 Syncro/4motion	06.97 - 11.00	
1.8 T	06.97 - 11.00	
1.9 TDI, 66 kW	06.97 - 11.00	
1.9 TDI, 81 kW	06.97 - 11.00	
1.9 TDI Syncro/4motion	06.97 - 11.00	
1.9 TDI, 85 kW	08.98 - 11.00	

Stange/Strebe, Stabilisator / Rod/Strut, stabiliser

Pendelstange / Suspension Rod
mit Zubehör / With accessories

(x2) | 24637 | 8E0 505 465 D

1.8 Syncro/4motion	06.97 - 11.00
2.0 4motion	04.00 - 11.00
2.3 VR5 Syncro/4motion	10.97 - 11.00
2.8 V6 4motion	09.99 - 11.00
2.8 V6 Syncro/4motion	06.97 - 11.00
1.9 TDI Syncro/4motion	06.97 - 11.00
1.9 TDI 4motion, 85 kW	08.99 - 11.00
2.5 TDI Syncro/4motion	12.98 - 11.00

PASSAT (3B3) 11.00 -

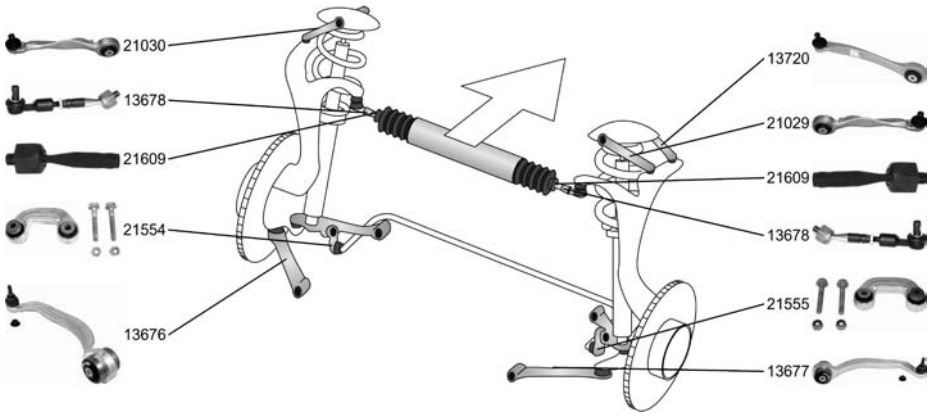

Spurstange / Tie Rod, steering

13678 | 4B0 419 801 M
21609
25863

ALL TYPES ausser/except for :	
2.8	11.00 -

VOLKSWAGEN

PASSAT (3B3) 11.00 -

Spurstangenkopf / Tie-rod End
Aussengewinde [mm] / Outer Thread [mm]:M14x1,5
Gewindeart: mit Rechtsgewinde / Thread Type: with right-hand thread

ALL TYPES ausser/except for :

2.8	11.00 -

25863 **4F0 419 811 B**

Axialgelenk, Spurstange / Axial Rod, tie rod
Gewindemaß / Thread Size:M14x1,5
Gewindeart: mit Rechtsgewinde / Thread Type: with right-hand thread

ALL TYPES ausser/except for :

2.8	11.00 -

21609 **4D0 422 821 A**

Lenker, Radaufhängung / Track Control Arm
mit Gummilager / with rubber mounting

1.6	11.00 -	->Chass. 3B-3-072 000
1.8 T 20V	11.00 -	
1.8 T	02.01 -	
2.0	11.00 - .	
2.0 4motion	11.00 -	
2.3 V5	11.00 -	
2.3 V5 4motion	11.00 -	
2.8 4motion	11.00 -	
4.0 W8 4motion	09.01 -	
1.9 TDI, 74 kW	11.00 -	
2.5 TDI, 110 kW	11.00 -	
2.5 TDI 4motion, 110 kW	11.00 -	

13673 **4D0 407 151 P**
14540
14541

Lenker, Radaufhängung / Track Control Arm
mit Gummilager / with rubber mounting
mit Zubehör / With accessories

ALL TYPES ausser/except for :

2.8	11.00 -

13676 **8E0 407 693 Q**
17659

Lenker, Radaufhängung / Track Control Arm
mit Gummilager / with rubber mounting
mit Zubehör / With accessories

ALL TYPES ausser/except for :

2.8	11.00 -

13677 **8E0 407 694 K**
17659

Lenker, Radaufhängung / Track Control Arm
mit Gummilager / with rubber mounting

ALL TYPES ausser/except for :

2.8	11.00 -

13719 **8E0 407 505 A**
25909

Lenker, Radaufhängung / Track Control Arm
mit Gummilager / with rubber mounting

ALL TYPES ausser/except for :

2.8	11.00 -

13720 **8E0 407 506 A**
25909

Lenker, Radaufhängung / Track Control Arm
mit Gummilager / with rubber mounting

ALL TYPES ausser/except for :

2.8	11.00 -

21029 **8E0 407 510 A**
25909

Lenker, Radaufhängung / Track Control Arm
mit Gummilager / with rubber mounting

ALL TYPES ausser/except for :

2.8	11.00 -

21030 **8E0 407 509 A**
25909

VOLKSWAGEN

PASSAT (3B3) 11.00 -

Lagerung, Lenker / Mounting, wishbone	I12/A40	**14540**	**4D0 407 181 H**
ALL TYPES ausser/except for :			
2.8 11.00 -			
Lagerung, Lenker / Mounting, wishbone	I12/A50	**14541**	**4D0 407 182 E**
ALL TYPES ausser/except for :			
2.8 11.00 -			
Lagerung, Lenker / Mounting, wishbone	I12/A65	**17659**	**4D0 407 183 S**
ALL TYPES ausser/except for :			
2.8 11.00 -			
Lagerung, Lenker / Mounting, wishbone		**25909**	**4B0 407 515**
ALL TYPES ausser/except for :			
2.8 11.00 -			
Reparatursatz, Querlenker / Repair Kit, wishbone arm		**27421**	**8D0 498 998**
ALL TYPES ausser/except for :	->Chass. 3B-3-072 000		
2.8 11.00 -			
2.0 TDI 12.03 -			
2.5 TDI, 120 kW 05.03 -			
Stange/Strebe, Stabilisator / Rod/Strut, stabiliser Pendelstange / Suspension Rod mit Zubehör / With accessories		**21554**	**8D0 411 317 D**
ALL TYPES ausser/except for :			
2.8 11.00 -			
Stange/Strebe, Stabilisator / Rod/Strut, stabiliser Pendelstange / Suspension Rod mit Zubehör / With accessories		**21555**	**8D0 411 318 D**
ALL TYPES ausser/except for :			
2.8 11.00 -			

Lagerbock, Achskörper / Bracket, axle body		**25947**	**4B0 501 521 E**
1.6 11.00 -			
1.8 T 20V 11.00 -			
1.8 T 02.01 -			
2.0 11.00 - .			
2.3 V5 11.00 -			
1.9 TDI 11.00 - .			
2.0 TDI 12.03 -			
2.5 TDI 11.00 - .			
Lagerbock, Achskörper / Bracket, axle body		**25948**	**4B0 501 522 E**
1.6 11.00 -			
1.8 T 20V 11.00 -			
1.8 T 02.01 -			
2.0 11.00 - .			
2.3 V5 11.00 -			
1.9 TDI 11.00 - .			
2.0 TDI 12.03 -			
2.5 TDI 11.00 - .			

VOLKSWAGEN

PASSAT Variant/Estate/Break (3B6) 11.00 -

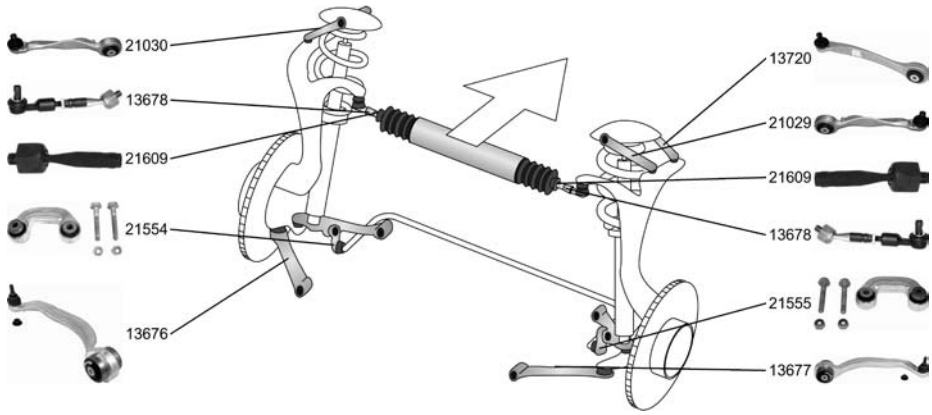

Spurstange / Tie Rod, steering ALL TYPES ausser/except for : 2.8 11.00 -		**13678** **4B0 419 801 M** 21609 25863
Spurstangenkopf / Tie-rod End Aussengewinde [mm] / Outer Thread [mm]:M14x1,5 Gewindeart: mit Rechtsgewinde / Thread Type: with right-hand thread ALL TYPES ausser/except for : 2.8 11.00 -		**25863** **4F0 419 811 B**
Axialgelenk, Spurstange / Axial Rod, tie rod Gewindemaß / Thread Size:M14x1,5 Gewindeart: mit Rechtsgewinde / Thread Type: with right-hand thread ALL TYPES ausser/except for : 2.8 11.00 -		**21609** **4D0 422 821 A**
Lenker, Radaufhängung / Track Control Arm mit Gummilager / with rubber mounting 1.6 11.00 - 1.8 T 20V 11.00 - 2.0 11.00 - . 2.0 4motion 11.00 - 2.3 VR5 11.00 - 2.3 VR5 4motion 11.00 - 2.8 4motion 11.00 - 4.0 W8 4motion 09.01 - 1.9 TDI 4motion 11.00 - 2.5 TDI, 110 kW 11.00 - 2.5 TDI 4motion, 110 kW 11.00 -	->Chass. 3B-3-072 000	**13673** **4D0 407 151 P** 14540 14541
Lenker, Radaufhängung / Track Control Arm mit Gummilager / with rubber mounting mit Zubehör / With accessories ALL TYPES ausser/except for : 2.8 11.00 -		**13676** **8E0 407 693 Q** 17659
Lenker, Radaufhängung / Track Control Arm mit Gummilager / with rubber mounting mit Zubehör / With accessories ALL TYPES ausser/except for : 2.8 11.00 -		**13677** **8E0 407 694 K** 17659
Lenker, Radaufhängung / Track Control Arm mit Gummilager / with rubber mounting ALL TYPES ausser/except for : 2.8 11.00 -		**13719** **8E0 407 505 A** 25909

VOLKSWAGEN

PASSAT Variant/Estate/Break (3B6) 11.00 -

Lenker, Radaufhängung / Track Control Arm mit Gummilager / with rubber mounting ALL TYPES ausser/except for : 2.8 11.00 -		**13720** 25909	**8E0 407 506 A**
Lenker, Radaufhängung / Track Control Arm mit Gummilager / with rubber mounting ALL TYPES ausser/except for : 2.8 11.00 -		**21029** 25909	**8E0 407 510 A**
Lenker, Radaufhängung / Track Control Arm mit Gummilager / with rubber mounting ALL TYPES ausser/except for : 2.8 11.00 -		**21030** 25909	**8E0 407 509 A**
Lagerung, Lenker / Mounting, wishbone ALL TYPES ausser/except for : 2.8 11.00 -	I12/A40	**14540**	**4D0 407 181 H**
Lagerung, Lenker / Mounting, wishbone ALL TYPES ausser/except for : 2.8 11.00 -	I12/A50	**14541**	**4D0 407 182 E**
Lagerung, Lenker / Mounting, wishbone ALL TYPES ausser/except for : 2.8 11.00 -	I12/A65	**17659**	**4D0 407 183 S**
Lagerung, Lenker / Mounting, wishbone ALL TYPES ausser/except for : 2.8 11.00 -		**25909**	**4B0 407 515**
Reparatursatz, Querlenker / Repair Kit, wishbone arm ALL TYPES ausser/except for : 2.8 11.00 - 2.0 TDI 12.03 - 2.5 TDI, 120 kW 05.03 -	->Chass. 3B-3-072 000	**27421**	**8D0 498 998**
Stange/Strebe, Stabilisator / Rod/Strut, stabiliser Pendelstange / Suspension Rod mit Zubehör / With accessories ALL TYPES ausser/except for : 2.8 11.00 -		**21554**	**8D0 411 317 D**
Stange/Strebe, Stabilisator / Rod/Strut, stabiliser Pendelstange / Suspension Rod mit Zubehör / With accessories ALL TYPES ausser/except for : 2.8 11.00 -		**21555**	**8D0 411 318 D**

VOLKSWAGEN

PASSAT Variant/Estate/Break (3B6) 11.00 -

Lagerbock, Achskörper / Bracket, axle body — **25947** — **4B0 501 521 E**

1.6	11.00 -
1.8 T 20V	11.00 -
2.0	11.00 - .
2.3 VR5	11.00 -
1.9 TDI	11.00 - .
2.0 TDI	12.03 -
2.5 TDI	11.00 - .

Lagerbock, Achskörper / Bracket, axle body — **25948** — **4B0 501 522 E**

1.6	11.00 -
1.8 T 20V	11.00 -
2.0	11.00 - .
2.3 VR5	11.00 -
1.9 TDI	11.00 - .
2.0 TDI	12.03 -
2.5 TDI	11.00 - .

PASSAT Variant (3C5) 08.05 -

Spurstangenkopf / Tie-rod End — **25327** — **1K0 423 811 G**

ALL TYPES ausser/except for :

2.0 TFSI	08.05 -
3.2 FSI	11.05 -
3.2 FSI 4motion	11.05 -

Spurstangenkopf / Tie-rod End — **25328** — **1K0 423 812 G**

ALL TYPES ausser/except for :

2.0 TFSI	08.05 -
3.2 FSI	11.05 -
3.2 FSI 4motion	11.05 -

Axialgelenk, Spurstange / Axial Rod, tie rod
Betriebsart: elektrisch / Operating Mode: Electric — **25329** — **1K0 423 810 A**

ALL TYPES ausser/except for :

2.0 TFSI	08.05 -
3.2 FSI	11.05 -
3.2 FSI 4motion	11.05 -

Trag-/Führungsgelenk / Support-/ Steering Link — **29998** — **3C0 407 365 A**

ALL TYPES ausser/except for :

2.0 TFSI	08.05 -
3.2 FSI	11.05 -
3.2 FSI 4motion	11.05 -

Trag-/Führungsgelenk / Support-/ Steering Link — **29999** — **3C0 407 366 A**

ALL TYPES ausser/except for :

2.0 TFSI	08.05 -
3.2 FSI	11.05 -
3.2 FSI 4motion	11.05 -

Lagerung, Lenker / Mounting, wishbone — **29916** — **1K0 407 182**

ALL TYPES ausser/except for :

2.0 TFSI	08.05 -
3.2 FSI	11.05 -
3.2 FSI 4motion	11.05 -

Stange/Strebe, Stabilisator / Rod/Strut, stabiliser
Pendelstange / Suspension Rod — **26774** — **1K0 411 315 D**

ALL TYPES ausser/except for :

2.0 TFSI	08.05 -
3.2 FSI	11.05 -
3.2 FSI 4motion	11.05 -

VOLKSWAGEN

PASSAT Variant (3C5) 08.05 -

Lagerung, Spurstange / Mounting, track rod			**29314** **1K0 501 541 C**
ALL TYPES ausser/except for :			
2.0 TFSI	08.05 -		
3.2 FSI	11.05 -		
3.2 FSI 4motion	11.05 -		
Lagerung, Spurstange / Mounting, track rod			**29921** **1K0 505 543 A**
ALL TYPES ausser/except for :			
2.0 TFSI	08.05 -		
3.2 FSI	11.05 -		
3.2 FSI 4motion	11.05 -		
Lagerung, Lenker / Mounting, wishbone			**29920** **1K0 505 541 C**
ALL TYPES ausser/except for :			
2.0 TFSI	08.05 -		
3.2 FSI	11.05 -		
3.2 FSI 4motion	11.05 -		
Stange/Strebe, Stabilisator / Rod/Strut, stabiliser Pendelstange / Suspension Rod mit Zubehör / With accessories			**26775** **1K0 505 465 K**
ALL TYPES ausser/except for :			
2.0 TFSI	08.05 -		
3.2 FSI	11.05 -		
3.2 FSI 4motion	11.05 -		

PASSAT (3C2) 03.05 -

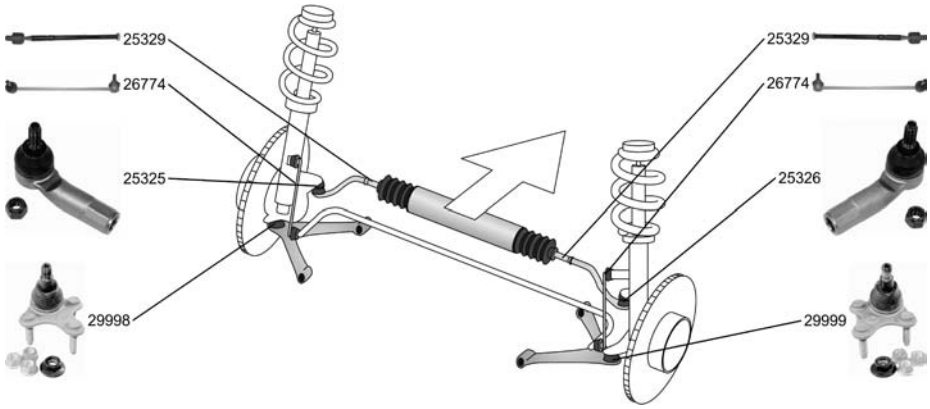

Spurstangenkopf / Tie-rod End mit Zubehör / With accessories			**25325** **1K0 423 811 E**
ALL TYPES ausser/except for :			
1.6	05.05 -		
2.0 TFSI	07.05 -		
3.2 FSI 4motion	11.05 -		
Spurstangenkopf / Tie-rod End mit Zubehör / With accessories			**25326** **1K0 423 812 E**
ALL TYPES ausser/except for :			
1.6	05.05 -		
2.0 TFSI	07.05 -		
3.2 FSI 4motion	11.05 -		
Axialgelenk, Spurstange / Axial Rod, tie rod Betriebsart: elektrisch / Operating Mode: Electric			**25329** **1K0 423 810 A**
ALL TYPES ausser/except for :			
1.6	05.05 -		
2.0 TFSI	07.05 -		
3.2 FSI 4motion	11.05 -		

VOLKSWAGEN

PASSAT (3C2) 03.05 -

Trag-/Führungsgelenk / Support-/ Steering Link

ALL TYPES ausser/except for :

1.6	05.05 -
2.0 TFSI	07.05 -
3.2 FSI 4motion	11.05 -

29998 3C0 407 365 A

Trag-/Führungsgelenk / Support-/ Steering Link

ALL TYPES ausser/except for :

1.6	05.05 -
2.0 TFSI	07.05 -
3.2 FSI 4motion	11.05 -

29999 3C0 407 366 A

Lagerung, Lenker / Mounting, wishbone

ALL TYPES ausser/except for :

1.6	05.05 -
2.0 TFSI	07.05 -
3.2 FSI 4motion	11.05 -

29916 1K0 407 182

Stange/Strebe, Stabilisator / Rod/Strut, stabiliser
Pendelstange / Suspension Rod

ALL TYPES ausser/except for :

1.6	05.05 -
2.0 TFSI	07.05 -
3.2 FSI 4motion	11.05 -

26774 1K0 411 315 D

Lagerung, Spurstange / Mounting, track rod

ALL TYPES ausser/except for :

1.6	05.05 -
2.0 TFSI	07.05 -
3.2 FSI 4motion	11.05 -

29314 1K0 501 541 C

Lagerung, Spurstange / Mounting, track rod

ALL TYPES ausser/except for :

1.6	05.05 -
2.0 TFSI	07.05 -
3.2 FSI 4motion	11.05 -

29921 1K0 505 543 A

Lagerung, Lenker / Mounting, wishbone

ALL TYPES ausser/except for :

1.6	05.05 -
2.0 TFSI	07.05 -
3.2 FSI 4motion	11.05 -

29920 1K0 505 541 C

Stange/Strebe, Stabilisator / Rod/Strut, stabiliser
Pendelstange / Suspension Rod
mit Zubehör / With accessories

ALL TYPES ausser/except for :

1.6	05.05 -
2.0 TFSI	07.05 -
3.2 FSI 4motion	11.05 -

26775 1K0 505 465 K

VOLKSWAGEN

PHAETON (3D2) 04.02 -

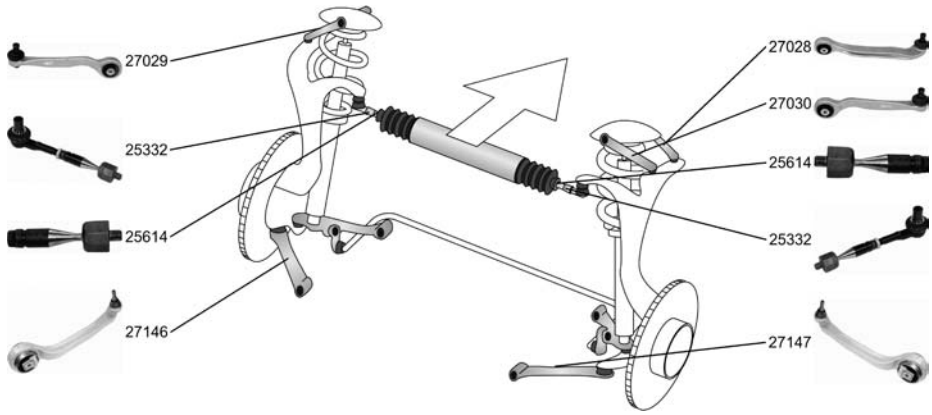

Spurstange / Tie Rod, steering			**25332** 4E0 419 801 D 25336 25614
3.2 V6	04.02 -		
4.2 V8 4motion	05.03 -		
6.0 W12 4motion	04.02 -		
5.0 V10 TDI 4motion	11.02 -		
Spurstangenkopf / Tie-rod End			**25336** 4E0 419 811 D
3.2 V6	04.02 -		
4.2 V8 4motion	05.03 -		
6.0 W12 4motion	04.02 -		
5.0 V10 TDI 4motion	11.02 -		
Axialgelenk, Spurstange / Axial Rod, tie rod			**25614** 4E0 419 821
3.2 V6	04.02 -		
4.2 V8 4motion	05.03 -		
6.0 W12 4motion	04.02 -		
5.0 V10 TDI 4motion	11.02 -		
Lenker, Radaufhängung / Track Control Arm mit Gummilager / with rubber mounting			**27027** 4E0 407 505 B 27077
3.2 V6	04.02 -		
6.0 W12 4motion	04.02 -		
5.0 V10 TDI 4motion	11.02 -		
Lenker, Radaufhängung / Track Control Arm mit Gummilager / with rubber mounting			**27028** 4E0 407 506 B 27077
3.2 V6	04.02 -		
6.0 W12 4motion	04.02 -		
5.0 V10 TDI 4motion	11.02 -		
Lenker, Radaufhängung / Track Control Arm mit Gummilager / with rubber mounting			**27029** 4E0 407 509 B 27077
3.2 V6	04.02 -		
6.0 W12 4motion	04.02 -		
5.0 V10 TDI 4motion	11.02 -		
Lenker, Radaufhängung / Track Control Arm mit Gummilager / with rubber mounting			**27030** 4E0 407 510 B 27077
3.2 V6	04.02 -		
6.0 W12 4motion	04.02 -		
5.0 V10 TDI 4motion	11.02 -		
Lenker, Radaufhängung / Track Control Arm mit Gummilager / with rubber mounting			**27146** 4E0 407 693 F
3.2 V6	04.02 -		
4.2 V8 4motion	05.03 -		
6.0 W12 4motion	04.02 -		
5.0 V10 TDI 4motion	11.02 -		
Lenker, Radaufhängung / Track Control Arm mit Gummilager / with rubber mounting ohne Zubehör / without accessories			**27147** 4E0 407 694 F
3.2 V6	04.02 -		
4.2 V8 4motion	05.03 -		
6.0 W12 4motion	04.02 -		
5.0 V10 TDI 4motion	11.02 -		

VOLKSWAGEN

PHAETON (3D2) 04.02 -

Lagerung, Lenker / Mounting, wishbone			27148 4E0 407 182 C
3.2 V6	04.02 -		
4.2 V8 4motion	05.03 -		
6.0 W12 4motion	04.02 -		
5.0 V10 TDI 4motion	11.02 -		
Stange/Strebe, Stabilisator / Rod/Strut, stabiliser Pendelstange / Suspension Rod mit Zubehör / With accessories			26803 4E0 505 547 B
3.2 V6	04.02 -		
4.2 V8 4motion	05.03 -		
6.0 W12 4motion	04.02 -		
5.0 V10 TDI 4motion	11.02 -		
Stange/Strebe, Stabilisator / Rod/Strut, stabiliser Pendelstange / Suspension Rod mit Zubehör / With accessories			26804 4E0 505 548 B
3.2 V6	04.02 -		
4.2 V8 4motion	05.03 -		
6.0 W12 4motion	04.02 -		
5.0 V10 TDI 4motion	11.02 -		
Stange/Strebe, Stabilisator / Rod/Strut, stabiliser Pendelstange / Suspension Rod		(x2)	27026 4E0 505 465 G
3.2 V6	04.02 -		
4.2 V8 4motion	05.03 -		
6.0 W12 4motion	04.02 -		
5.0 V10 TDI 4motion	11.02 -		

POLO (86C, 80) 10.81 - 09.94

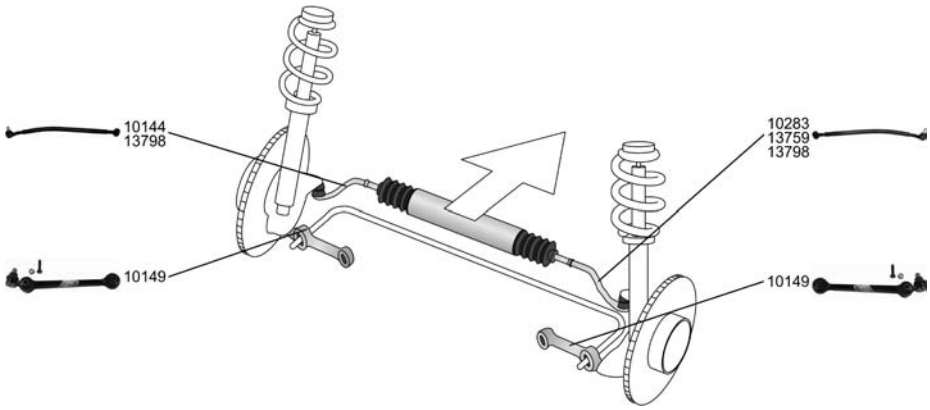

Spurstange / Tie Rod, steering Konusmaß [mm] / Cone Size [mm]:12		LHD	10144 871 419 801 A
1.0, 29 kW	10.81 - 10.86	Chass. 86-D-000001->	
1.0, 29 kW	10.81 - 10.86	Chass. 86-D-000001->	
1.0, 33 kW	08.85 - 01.92		
1.0 KAT	08.89 - 09.94		
1.1	10.81 - 09.89		
1.3, 40 kW	08.83 - 07.88		
1.3 KAT	07.87 - 09.94		
1.3, 44 kW	10.81 - 07.83		
1.3, 55 kW	09.82 - 09.89		
1.3 D	08.86 - 07.90		
1.4 D	10.90 - 09.94		
1.0, 33 kW	08.85 - 01.92		
1.0 KAT	08.89 - 09.94		
1.1	10.81 - 09.89		
1.3, 40 kW	08.83 - 07.88		
1.3 KAT	07.87 - 09.94		
1.3, 44 kW	10.81 - 07.83		
1.3, 55 kW	09.82 - 09.89		
1.3 D	08.86 - 07.90		
1.4 D	10.90 - 09.94		

VOLKSWAGEN

POLO (86C, 80) 10.81 - 09.94

Spurstange / Tie Rod, steering Konusmaß [mm] / Cone Size [mm]:12 Rohr-Ø [mm] / Pipe Ø [mm]:22		RHD	**10283** **872 419 802 A**
1.0, 29 kW	10.81 - 10.86	Chass. 86-D-000001->	
1.0, 33 kW	08.85 - 01.92		
1.0 KAT	08.89 - 09.94		
1.1	10.81 - 09.89		
1.3, 40 kW	08.83 - 07.88		
1.3 KAT	07.87 - 09.94		
1.3, 44 kW	10.81 - 07.83		
1.3, 55 kW	09.82 - 09.89		
1.3 D	08.86 - 07.90		
1.4 D	10.90 - 09.94		
Spurstange / Tie Rod, steering		▲ RHD	**13759** **862 419 802** 10146
1.0, 29 kW	10.81 - 10.86	->Chass. 86-C-200000	
0.9	10.81 - 12.81		
Spurstange / Tie Rod, steering Konusmaß [mm] / Cone Size [mm]:12 Rohr-Ø [mm] / Pipe Ø [mm]:18 mit Zubehör / With accessories		LHD RHD	**13798** **871 419 802**
1.0, 29 kW	10.81 - 10.86	Chass. 86-D-000001->	
1.0, 33 kW	08.85 - 01.92		
1.0 KAT	08.89 - 09.94		
1.1	10.81 - 09.89		
1.3, 40 kW	08.83 - 07.88		
1.3 KAT	07.87 - 09.94		
1.3, 44 kW	10.81 - 07.83		
1.3, 55 kW	09.82 - 09.89		
1.3 D	08.86 - 07.90		
1.4 D	10.90 - 09.94		
Spurstange / Tie Rod, steering		▲	**16628** **861 419 802 A** 10146
1.0, 29 kW	10.81 - 10.86	LHD ->Chass. 86-C-200000	
1.0, 29 kW	10.81 - 10.86	RHD ->Chass. 86-C-200000	
0.9	10.81 - 12.81	LHD	
0.9	10.81 - 12.81	RHD	
Spurstange / Tie Rod, steering Konusmaß [mm] / Cone Size [mm]:12 Rohr-Ø [mm] / Pipe Ø [mm]:18 mit Zubehör / With accessories			**16629** **871 419 802 A**
1.0, 29 kW	10.81 - 10.86	RHD Chass. 86-D-000001->	
1.0, 33 kW	08.85 - 01.92	RHD	
1.0 KAT	08.89 - 09.94		
1.1	10.81 - 09.89		
1.3, 40 kW	08.83 - 07.88		
1.3 KAT	07.87 - 09.94		
1.3, 44 kW	10.81 - 07.83		
1.3, 55 kW	09.82 - 09.89		
1.3 D	08.86 - 07.90		
1.4 D	10.90 - 09.94		
Spurstangenkopf / Tie-rod End Aussengewinde [mm] / Outer Thread [mm]:M14x1,5 Gewindeart: mit Rechtsgewinde / Thread Type: with right-hand thread			**10146** **811 419 812**
0.9	10.81 - 12.81		
1.0	10.81 - 01.92		
1.0 KAT	08.89 - 09.94		
1.1	10.81 - 09.89		
1.3, 40 kW	08.83 - 07.88		
1.3 KAT	07.87 - 09.94		
1.3, 44 kW	10.81 - 07.83		
1.3, 55 kW	09.82 - 09.89		
1.3 D	08.86 - 07.90		
1.4 D	10.90 - 09.94		

VOLKSWAGEN

POLO (86C, 80) 10.81 - 09.94

Lenker, Radaufhängung / Track Control Arm mit Gummilager / with rubber mounting mit Zubehör / With accessories			10149 861 407 151 B
0.9	10.81 - 12.81		
1.0	10.81 - 01.92		
1.0 KAT	08.89 - 09.94		
1.1	10.81 - 09.89		
1.3, 40 kW	08.83 - 07.88		
1.3 KAT	07.87 - 09.94		
1.3, 44 kW	10.81 - 07.83		
1.3, 55 kW	09.82 - 09.89		
1.3 D	08.86 - 07.90		
1.4 D	10.90 - 09.94		
Lagerung, Lenker / Mounting, wishbone			10206 861 407 183
0.9	10.81 - 12.81		
1.0	10.81 - 01.92		
1.0 KAT	08.89 - 09.94		
1.1	10.81 - 09.89		
1.3, 40 kW	08.83 - 07.88		
1.3 KAT	07.87 - 09.94		
1.3, 44 kW	10.81 - 07.83		
1.3, 55 kW	09.82 - 09.89		
1.3 D	08.86 - 07.90		
1.4 D	10.90 - 09.94		
Faltenbalg, Lenkung / Boot, steering system			30158 861 419 831 B
1.0, 29 kW	10.81 - 10.86	Chass. 86-C-000 001->	
1.0 KAT	08.89 - 09.94		
1.1	10.81 - 09.89		
1.3 KAT	07.87 - 09.94		
1.3, 44 kW	10.81 - 07.83		
1.3 D	08.86 - 07.90		
1.4 D	10.90 - 09.94		

POLO Coupe (86C, 80) 10.81 - 09.94

Spurstange / Tie Rod, steering Konusmaß [mm] / Cone Size [mm]:12		LHD	10144 871 419 801 A
1.0, 29 kW	05.82 - 10.86	Chass. 86-D-000001->	
1.1	10.81 - 07.83		
1.3, 44 kW	10.81 - 07.83		
1.0, 29 kW	05.82 - 10.86	Chass. 86-D-000001->	
1.1	10.81 - 07.83		
1.3, 44 kW	10.81 - 07.83		
1.0, 33 kW	08.85 - 01.92		
1.0 KAT	08.89 - 09.94		
1.3, 40 kW	08.83 - 06.87		
1.3 KAT	07.87 - 09.94		
1.3, 55 kW	09.82 - 09.89		
1.3 D	08.86 - 08.90		
1.4 D	08.90 - 09.94		
1.0, 33 kW	08.85 - 01.92		
1.0 KAT	08.89 - 09.94		
1.3, 40 kW	08.83 - 06.87		
1.3 KAT	07.87 - 09.94		
1.3, 55 kW	09.82 - 09.89		
1.3 D	08.86 - 08.90		
1.4 D	08.90 - 09.94		
Spurstange / Tie Rod, steering Konusmaß [mm] / Cone Size [mm]:12 Rohr-Ø [mm] / Pipe Ø [mm]:22		RHD	10283 872 419 802 A
1.0, 29 kW	05.82 - 10.86	Chass. 86-D-000001->	
1.1	10.81 - 07.83		
1.3, 44 kW	10.81 - 07.83		
1.0, 33 kW	08.85 - 01.92		
1.0 KAT	08.89 - 09.94		
1.3, 40 kW	08.83 - 06.87		
1.3 KAT	07.87 - 09.94		
1.3, 55 kW	09.82 - 09.89		
1.3 D	08.86 - 08.90		
1.4 D	08.90 - 09.94		

VOLKSWAGEN

POLO Coupe (86C, 80) 10.81 - 09.94

Spurstange / Tie Rod, steering		▲ RHD	**13759** 10146 **862 419 802**
1.0, 29 kW	05.82 - 10.86	->Chass. 86-C-200000	
1.1	10.81 - 07.83		
1.3, 44 kW	10.81 - 07.83		
Spurstange / Tie Rod, steering Konusmaß [mm] / Cone Size [mm]:12 Rohr-Ø [mm] / Pipe Ø [mm]:22 mit Zubehör / With accessories			**13797** **871 419 801 B**
1.3 G40	01.87 - 09.94	LHD	
Spurstange / Tie Rod, steering Konusmaß [mm] / Cone Size [mm]:12 Rohr-Ø [mm] / Pipe Ø [mm]:18 mit Zubehör / With accessories		LHD RHD	**13798** **871 419 802**
1.0, 29 kW	05.82 - 10.86	Chass. 86-D-000001->	
1.1	10.81 - 07.83		
1.3, 44 kW	10.81 - 07.83		
1.0, 33 kW	08.85 - 01.92		
1.0 KAT	08.89 - 09.94		
1.3, 40 kW	08.83 - 06.87		
1.3 KAT	07.87 - 09.94		
1.3, 55 kW	09.82 - 09.89		
1.3 D	08.86 - 08.90		
1.4 D	08.90 - 09.94		
Spurstange / Tie Rod, steering		▲	**16628** 10146 **861 419 802 A**
1.0, 29 kW	05.82 - 10.86	LHD	
1.1	10.81 - 07.83	->Chass. 86-C-200000	
1.3, 44 kW	10.81 - 07.83		
1.0, 29 kW	05.82 - 10.86	RHD	
1.1	10.81 - 07.83	->Chass. 86-C-200000	
1.3, 44 kW	10.81 - 07.83		
Spurstange / Tie Rod, steering Konusmaß [mm] / Cone Size [mm]:12 Rohr-Ø [mm] / Pipe Ø [mm]:18 mit Zubehör / With accessories			**16629** **871 419 802 A**
1.0, 29 kW	05.82 - 10.86	RHD	
1.1	10.81 - 07.83	Chass. 86-D-000001->	
1.3, 44 kW	10.81 - 07.83		
1.3 G40	01.87 - 09.94	LHD ----------	
1.0, 33 kW	08.85 - 01.92	RHD	
1.0 KAT	08.89 - 09.94		
1.3, 40 kW	08.83 - 06.87		
1.3 KAT	07.87 - 09.94		
1.3, 55 kW	09.82 - 09.89		
1.3 D	08.86 - 08.90		
1.4 D	08.90 - 09.94		
Spurstangenkopf / Tie-rod End Aussengewinde [mm] / Outer Thread [mm]:M14x1,5 Gewindeart: mit Rechtsgewinde / Thread Type: with right-hand thread			**10146** **811 419 812**
ALL TYPES ausser/except for :			
1.3, 44 kW	10.81 - 07.83		
1.3, 57 kW	03.91 - 09.94		
Lenker, Radaufhängung / Track Control Arm mit Gummilager / with rubber mounting mit Zubehör / With accessories			**10149** **861 407 151 B**
1.0	05.82 - 01.92		
1.0 KAT	08.89 - 09.94		
1.1	10.81 - 07.83		
1.3, 40 kW	08.83 - 06.87		
1.3 KAT	07.87 - 09.94		
1.3, 44 kW	10.81 - 07.83		
1.3, 55 kW	09.82 - 09.89		
1.3 D	08.86 - 08.90		
1.4 D	08.90 - 09.94		

VOLKSWAGEN

POLO Coupe (86C, 80) 10.81 - 09.94

Lagerung, Lenker / Mounting, wishbone			**10206** **861 407 183**
ALL TYPES ausser/except for :			
1.3, 44 kW	10.81 - 07.83		
1.3, 57 kW	03.91 - 09.94		
Faltenbalg, Lenkung / Boot, steering system			**30158** **861 419 831 B**
1.0, 29 kW	05.82 - 10.86	Chass. 86-C-000 001->	
1.0 KAT	08.89 - 09.94		
1.1	10.81 - 07.83		
1.3 KAT	07.87 - 09.94		
1.3, 44 kW	10.81 - 07.83		
1.3 G40	01.87 - 09.94		
1.3 D	08.86 - 08.90		
1.4 D	08.90 - 09.94		

POLO Classic/Saloon/avec coffre (86C, 80) 01.85 - 07.92

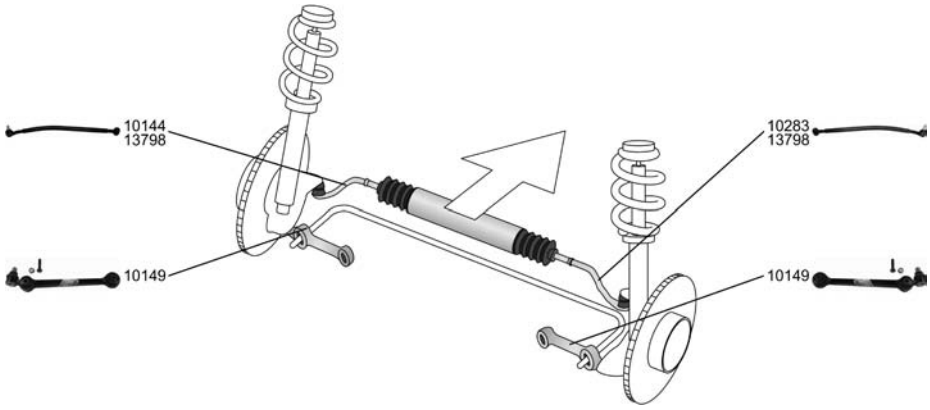

Spurstange / Tie Rod, steering Konusmaß [mm] / Cone Size [mm]:12		LHD	**10144** **871 419 801 A**
ALL TYPES ausser/except for :			
1.4 D	10.90 - 09.94		
ALL TYPES ausser/except for :			
1.4 D	10.90 - 09.94		
Spurstange / Tie Rod, steering Konusmaß [mm] / Cone Size [mm]:12 Rohr-Ø [mm] / Pipe Ø [mm]:22		RHD	**10283** **872 419 802 A**
ALL TYPES ausser/except for :			
1.4 D	10.90 - 09.94		
Spurstange / Tie Rod, steering Konusmaß [mm] / Cone Size [mm]:12 Rohr-Ø [mm] / Pipe Ø [mm]:18 mit Zubehör / With accessories		LHD RHD	**13798** **871 419 802**
ALL TYPES ausser/except for :			
1.4 D	10.90 - 09.94		
Spurstange / Tie Rod, steering Konusmaß [mm] / Cone Size [mm]:12 Rohr-Ø [mm] / Pipe Ø [mm]:18 mit Zubehör / With accessories			**16629** **871 419 802 A**
ALL TYPES ausser/except for :		RHD	
1.4 D	10.90 - 09.94		
Spurstangenkopf / Tie-rod End Aussengewinde [mm] / Outer Thread [mm]:M14x1,5 Gewindeart: mit Rechtsgewinde / Thread Type: with right-hand thread			**10146** **811 419 812**
ALL TYPES ausser/except for :			
1.4 D	10.90 - 09.94		

VOLKSWAGEN

POLO Classic/Saloon/avec coffre (86C, 80) 01.85 - 07.92

Lenker, Radaufhängung / Track Control Arm mit Gummilager / with rubber mounting mit Zubehör / With accessories			10149 861 407 151 B
ALL TYPES ausser/except for :			
1.4 D	10.90 - 09.94		
Lagerung, Lenker / Mounting, wishbone			10206 861 407 183
ALL TYPES ausser/except for :			
1.4 D	10.90 - 09.94		
Faltenbalg, Lenkung / Boot, steering system			30158 861 419 831 B
1.0	01.85 - 09.94	Chass. 86-C-000 001->	
1.3 KAT	07.87 - 09.94		
1.3 D	08.86 - 12.88		

POLO Kasten/Box/Furgón/Van (86CF) 04.93 -

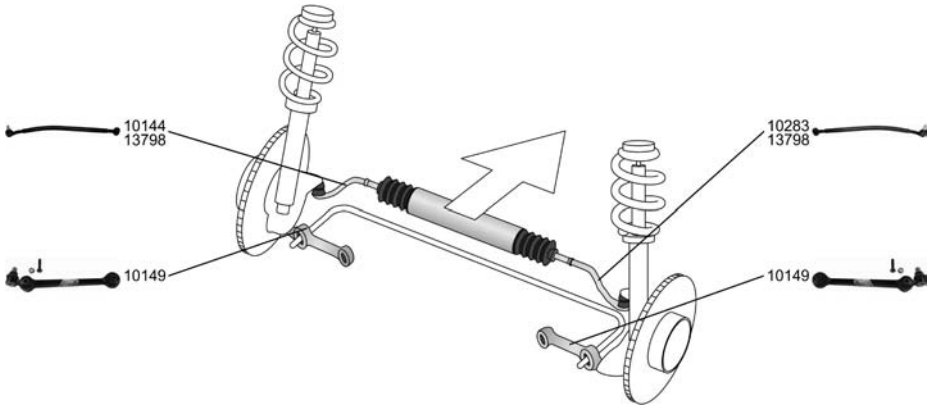

Spurstange / Tie Rod, steering Konusmaß [mm] / Cone Size [mm]:12	LHD	10144 871 419 801 A
ALL TYPES		
ALL TYPES		
Spurstange / Tie Rod, steering Konusmaß [mm] / Cone Size [mm]:12 Rohr-Ø [mm] / Pipe Ø [mm]:22	RHD	10283 872 419 802 A
ALL TYPES		
Spurstange / Tie Rod, steering Konusmaß [mm] / Cone Size [mm]:12 Rohr-Ø [mm] / Pipe Ø [mm]:18 mit Zubehör / With accessories	LHD RHD	13798 871 419 802
ALL TYPES		
Spurstange / Tie Rod, steering Konusmaß [mm] / Cone Size [mm]:12 Rohr-Ø [mm] / Pipe Ø [mm]:18 mit Zubehör / With accessories		16629 871 419 802 A
ALL TYPES	RHD	
Spurstangenkopf / Tie-rod End Aussengewinde [mm] / Outer Thread [mm]:M14x1,5 Gewindeart: mit Rechtsgewinde / Thread Type: with right-hand thread		10146 811 419 812
ALL TYPES		

VOLKSWAGEN

POLO Kasten/Box/Furgón/Van (86CF) 04.93 -

Lenker, Radaufhängung / Track Control Arm
mit Gummilager / with rubber mounting
mit Zubehör / With accessories

ALL TYPES

10149 **861 407 151 B**

POLO (6N1) 10.94 - 10.99

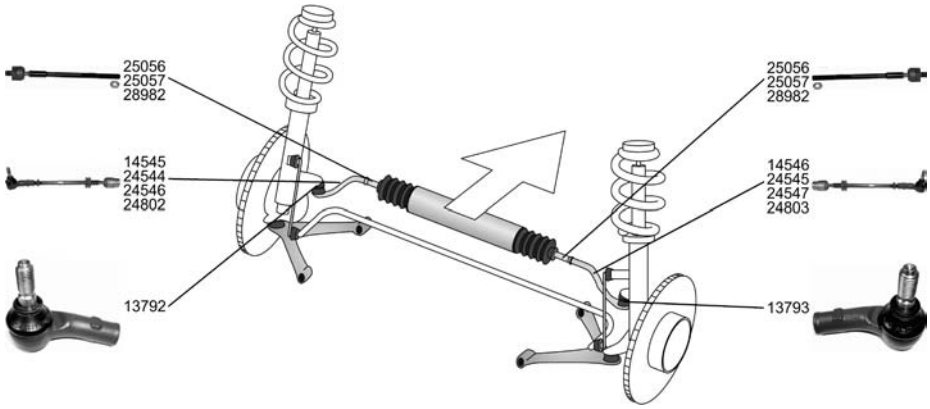

Spurstange / Tie Rod, steering
mit Zubehör / With accessories

45 1.0	10.94 - 09.96
50 1.0	09.96 - 10.99
55 1.3	10.94 - 07.95
55 1.4	08.95 - 10.99
60 1.4	07.95 - 10.99
100 1.4 16V	04.96 - 10.99
75 1.6	10.94 - 10.99
120 1.6 16V GTI	09.98 - 10.99
1.7 SDI	04.97 - 10.99
60 1.7 SDI	08.97 - 10.99
64 1.9 D	10.94 - 10.99
64 1.9 SDI	07.96 - 10.99

14545 **6N0 419 803**

Spurstange / Tie Rod, steering
mit Zubehör / With accessories

45 1.0	10.94 - 09.96
50 1.0	09.96 - 10.99
55 1.3	10.94 - 07.95
55 1.4	08.95 - 10.99
60 1.4	07.95 - 10.99
100 1.4 16V	04.96 - 10.99
75 1.6	10.94 - 10.99
120 1.6 16V GTI	09.98 - 10.99
1.7 SDI	04.97 - 10.99
60 1.7 SDI	08.97 - 10.99
64 1.9 D	10.94 - 10.99
64 1.9 SDI	07.96 - 10.99

14546 **6N0 419 804**

Spurstange / Tie Rod, steering
mit Zubehör / With accessories

120 1.6 16V GTI	09.98 - 10.99

24544 **6N0 422 803 B**
24739
25056

Spurstange / Tie Rod, steering
mit Zubehör / With accessories

120 1.6 16V GTI	09.98 - 10.99

24545 **6N0 422 804 B**
24740
25056

VOLKSWAGEN

POLO (6N1) 10.94 - 10.99

Spurstange / Tie Rod, steering
mit Zubehör / With accessories

24546 **6N0 422 803 D**
30567
25057

45 1.0	10.94 - 09.96	Chass. 6N-WW078-257->
55 1.3	10.94 - 07.95	
55 1.4	08.95 - 10.99	
60 1.4	07.95 - 10.99	
100 1.4 16V	04.96 - 10.99	
75 1.6	10.94 - 10.99	
64 1.9 D	10.94 - 10.99	
50 1.0	09.96 - 10.99	
60 1.7 SDI	08.97 - 10.99	

Spurstange / Tie Rod, steering
mit Zubehör / With accessories

24547 **6N0 422 804 D**
30568
25057

45 1.0	10.94 - 09.96	Chass. 6N-WW078-257->
55 1.3	10.94 - 07.95	
55 1.4	08.95 - 10.99	
60 1.4	07.95 - 10.99	
100 1.4 16V	04.96 - 10.99	
75 1.6	10.94 - 10.99	
64 1.9 D	10.94 - 10.99	
50 1.0	09.96 - 10.99	
60 1.7 SDI	08.97 - 10.99	

Spurstange / Tie Rod, steering

24802 **6N0 422 803 A**
28982
13792

45 1.0	10.94 - 09.96	->Chass. 6N-W-078 256
50 1.0	09.96 - 10.99	
55 1.3	10.94 - 07.95	
55 1.4	08.95 - 10.99	
60 1.4	07.95 - 10.99	
100 1.4 16V	04.96 - 10.99	
75 1.6	10.94 - 10.99	
120 1.6 16V GTI	09.98 - 10.99	
60 1.7 SDI	08.97 - 10.99	
64 1.9 D	10.94 - 10.99	

Spurstange / Tie Rod, steering

24803 **6N0 422 804 A**
28982
13793

45 1.0	10.94 - 09.96	->Chass. 6N-W-078 256
50 1.0	09.96 - 10.99	
55 1.3	10.94 - 07.95	
55 1.4	08.95 - 10.99	
60 1.4	07.95 - 10.99	
100 1.4 16V	04.96 - 10.99	
75 1.6	10.94 - 10.99	
120 1.6 16V GTI	09.98 - 10.99	
60 1.7 SDI	08.97 - 10.99	
64 1.9 D	10.94 - 10.99	

Spurstangenkopf / Tie-rod End
Konusmaß [mm] / Cone Size [mm]:14
Innengewinde [mm] / Inner Thread [mm]:M14x1,5
Gewindeart: mit Rechtsgewinde / Thread Type: with right-hand thread
mit Zubehör / With accessories

13792 **6N0 419 811**

45 1.0	10.94 - 09.96	
50 1.0	09.96 - 10.99	
55 1.3	10.94 - 07.95	----------
55 1.4	08.95 - 10.99	
60 1.4	07.95 - 10.99	
100 1.4 16V	04.96 - 10.99	->Chass. 6N-WW078 256
75 1.6	10.94 - 10.99	->Chass. 6N-WX078 256
1.7 SDI	04.97 - 10.99	->Chass. 6N-WY156 681
64 1.9 D	10.94 - 10.99	
64 1.9 SDI	07.96 - 10.99	
120 1.6 16V GTI	09.98 - 10.99	
60 1.7 SDI	08.97 - 10.99	

VOLKSWAGEN

POLO (6N1) 10.94 - 10.99

Spurstangenkopf / Tie-rod End
Konusmaß [mm] / Cone Size [mm]:14
Innengewinde [mm] / Inner Thread [mm]:M14x1,5
Gewindeart: mit Rechtsgewinde / Thread Type: with right-hand thread
mit Zubehör / With accessories

13793 **6N0 419 812**

45 1.0	10.94 - 09.96	
50 1.0	09.96 - 10.99	
55 1.3	10.94 - 07.95	
55 1.4	08.95 - 10.99	->Chass. 6N-WW078 256
60 1.4	07.95 - 10.99	->Chass. 6N-WX078 256
100 1.4 16V	04.96 - 10.99	->Chass. 6N-WY156 681
75 1.6	10.94 - 10.99	
1.7 SDI	04.97 - 10.99	
64 1.9 D	10.94 - 10.99	
64 1.9 SDI	07.96 - 10.99	
120 1.6 16V GTI	09.98 - 10.99	
60 1.7 SDI	08.97 - 10.99	

Axialgelenk, Spurstange / Axial Rod, tie rod
mit Zubehör / With accessories

25056 **6N0 422 807 B**

100 1.4 16V	04.96 - 10.99	Chass. 6N-XY281 179->
120 1.6 16V GTI	09.98 - 10.99	

Axialgelenk, Spurstange / Axial Rod, tie rod
mit Zubehör / With accessories

25057 **6N0 422 807 D**

50 1.0	09.96 - 10.99
55 1.4	08.95 - 10.99
60 1.4	07.95 - 10.99
75 1.6	10.94 - 10.99
1.7 SDI	04.97 - 10.99
60 1.7 SDI	08.97 - 10.99
64 1.9 D	10.94 - 10.99
64 1.9 SDI	07.96 - 10.99

Axialgelenk, Spurstange / Axial Rod, tie rod

28982 **6N0 422 807 A**

45 1.0	10.94 - 09.96	->Chass. 6N-W-078 256
50 1.0	09.96 - 10.99	
55 1.3	10.94 - 07.95	
55 1.4	08.95 - 10.99	
60 1.4	07.95 - 10.99	
100 1.4 16V	04.96 - 10.99	
75 1.6	10.94 - 10.99	
120 1.6 16V GTI	09.98 - 10.99	
60 1.7 SDI	08.97 - 10.99	
64 1.9 D	10.94 - 10.99	

Lenker, Radaufhängung / Track Control Arm
ohne Trag-/Führungsgelenk / without support/ steering link
mit Gummilager / with rubber mounting
nur in Verbindung mit / Only in connection with:13791/13790

22569 **6N0 407 151 B**
21413
17355

45 1.0	10.94 - 09.96
50 1.0	09.96 - 10.99
55 1.3	10.94 - 07.95
55 1.4	08.95 - 10.99
60 1.4	07.95 - 10.99
100 1.4 16V	04.96 - 10.99
75 1.6	10.94 - 10.99
120 1.6 16V GTI	09.98 - 10.99
1.7 SDI	04.97 - 10.99
60 1.7 SDI	08.97 - 10.99
64 1.9 D	10.94 - 10.99
64 1.9 SDI	07.96 - 10.99

Trag-/Führungsgelenk / Support-/ Steering Link
ohne Zubehör / without accessories

13790 **6N0 407 365 A**

45 1.0	10.94 - 09.96	
50 1.0	09.96 - 10.99	
55 1.3	10.94 - 07.95	
55 1.4	08.95 - 10.99	Felgengröße [Zoll] / Rim Size [in]:14
60 1.4	07.95 - 10.99	
100 1.4 16V	04.96 - 10.99	
75 1.6	10.94 - 10.99	
120 1.6 16V GTI	09.98 - 10.99	
1.7 SDI	04.97 - 10.99	
60 1.7 SDI	08.97 - 10.99	
64 1.9 D	10.94 - 10.99	
64 1.9 SDI	07.96 - 10.99	

VOLKSWAGEN

POLO (6N1) 10.94 - 10.99

Trag-/Führungsgelenk / Support-/ Steering Link
ohne Zubehör / without accessories

13791 6N0 407 365

45 1.0	10.94 - 09.96
50 1.0	09.96 - 10.99
55 1.3	10.94 - 07.95
55 1.4	08.95 - 10.99
60 1.4	07.95 - 10.99
100 1.4 16V	04.96 - 10.99
75 1.6	10.94 - 10.99
120 1.6 16V GTI	09.98 - 10.99
1.7 SDI	04.97 - 10.99
60 1.7 SDI	08.97 - 10.99
64 1.9 D	10.94 - 10.99
64 1.9 SDI	07.96 - 10.99

Felgengröße [Zoll] / Rim Size [in]:14

Lagerung, Lenker / Mounting, wishbone

I17/A61

17355 6N0 407 181

ALL TYPES

Lagerung, Lenker / Mounting, wishbone

I17/A61

21413 6N0 407 182

45 1.0	10.94 - 09.96
50 1.0	09.96 - 10.99
55 1.3	10.94 - 07.95
55 1.4	08.95 - 10.99
60 1.4	07.95 - 10.99
100 1.4 16V	04.96 - 10.99
75 1.6	10.94 - 10.99
120 1.6 16V GTI	09.98 - 10.99
1.7 SDI	04.97 - 10.99
60 1.7 SDI	08.97 - 10.99
64 1.9 D	10.94 - 10.99
64 1.9 SDI	07.96 - 10.99

Faltenbalgsatz, Lenkung / Bellow Kit, steering system

30175 6N0 422 831

45 1.0	10.94 - 09.96
50 1.0	09.96 - 10.99
55 1.3	10.94 - 07.95
55 1.4	08.95 - 10.99
60 1.4	07.95 - 10.99
100 1.4 16V	04.96 - 10.99
75 1.6	10.94 - 10.99
120 1.6 16V GTI	09.98 - 10.99
1.7 SDI	04.97 - 10.99
60 1.7 SDI	08.97 - 10.99
64 1.9 D	10.94 - 10.99
64 1.9 SDI	07.96 - 10.99

Faltenbalgsatz, Lenkung / Bellow Kit, steering system

30176 6N0 419 831

45 1.0	10.94 - 09.96
50 1.0	09.96 - 10.99
55 1.3	10.94 - 07.95
55 1.4	08.95 - 10.99
60 1.4	07.95 - 10.99
100 1.4 16V	04.96 - 10.99
75 1.6	10.94 - 10.99
120 1.6 16V GTI	09.98 - 10.99
1.7 SDI	04.97 - 10.99
60 1.7 SDI	08.97 - 10.99
64 1.9 D	10.94 - 10.99
64 1.9 SDI	07.96 - 10.99

Achskörperlager / Mounting, axle body

21549 6N0 501 541 D

45 1.0	10.94 - 09.96
50 1.0	09.96 - 10.99
55 1.3	10.94 - 07.95
55 1.4	08.95 - 10.99
60 1.4	07.95 - 10.99
100 1.4 16V	04.96 - 10.99
75 1.6	10.94 - 10.99
120 1.6 16V GTI	09.98 - 10.99
1.7 SDI	04.97 - 10.99
60 1.7 SDI	08.97 - 10.99
64 1.9 D	10.94 - 10.99
64 1.9 SDI	07.96 - 10.99

VOLKSWAGEN

POLO Kasten/Box/Furgón/Van (6NF) 10.94 -

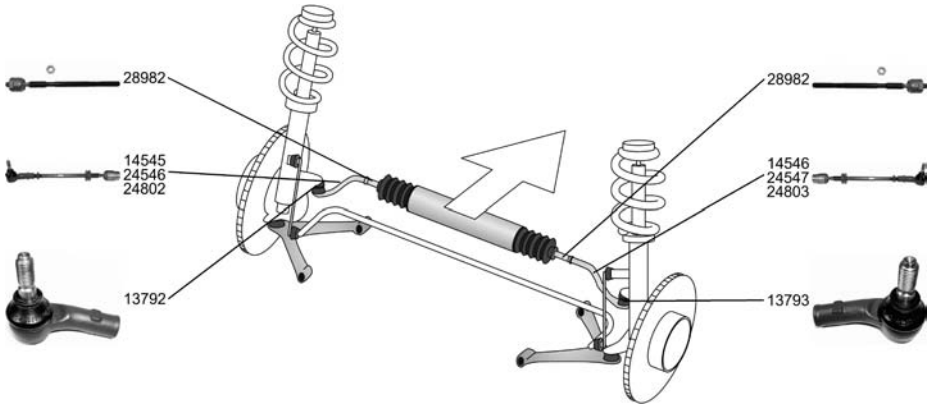

Spurstange / Tie Rod, steering mit Zubehör / With accessories			**14545** **6N0 419 803**
ALL TYPES		->Chass. 6N-Y-050 000	
Spurstange / Tie Rod, steering mit Zubehör / With accessories			**14546** **6N0 419 804**
ALL TYPES		->Chass. 6N-Y-050 000	
Spurstange / Tie Rod, steering mit Zubehör / With accessories			**24546** **6N0 422 803 D** 30567 25057
1.9 D	10.94 -	Chass. 6N-WW078 257-> Chass. 6N-WY156 687-> Chass. 6N-WX078 257 - Chass. 6N-Y-050 000	
1.0 1.4 1.7 SDI 1.9 SDI	10.94 - 05.98 - 08.97 - 07.96 -	Chass. 6N-WW078 257-> Chass. 6N-WY156 682-> Chass. 6N-WX078 257 - Chass. 6N-Y-050 000	
Spurstange / Tie Rod, steering mit Zubehör / With accessories			**24547** **6N0 422 804 D** 30568 25057
1.9 D 1.9 SDI	10.94 - 07.96 -	Chass. 6N-WW078 257-> Chass. 6N-WY156 682-> Chass. 6N-WX078 257 - Chass. 6N-Y-050 000	
1.7 SDI	08.97 -	Chass. 6N-WW078 257-> Chass. 6N-WY156 682-> Chass. 6N-WX078 256 - Chass. 6N-Y-050 000	
1.0 1.4	10.94 - 05.98 -	Chass. 6N-WW078 257-> Chass. 6N-WX078 256-> Chass. 6N-WY156 681 - Chass. 6N-Y-050 000	
Spurstange / Tie Rod, steering			**24802** **6N0 422 803 A** 28982 13792
1.0 1.9 D 1.9 SDI	10.94 - 10.94 - 07.96 -	->Chass. 6N-WY156 681 ->Chass. 6N-WX078 256 ->Chass. 6N-WW078 256	
Spurstange / Tie Rod, steering			**24803** **6N0 422 804 A** 28982 13793
1.9 D 1.9 SDI	10.94 - 07.96 -	->Chass. 6N-WY156 681 ->Chass. 6N-WX078 256 ->Chass. 6N-WW078 256	
1.0	10.94 -	->Chass. 6N-WW078 256	

POLO Kasten/Box/Furgón/Van (6NF) 10.94 -

Spurstangenkopf / Tie-rod End Konusmaß [mm] / Cone Size [mm]:14 Innengewinde [mm] / Inner Thread [mm]:M14x1,5 Gewindeart: mit Rechtsgewinde / Thread Type: with right-hand thread mit Zubehör / With accessories			**13792** **6N0 419 811**
1.0 10.94 - 1.9 D 10.94 - 1.9 SDI 07.96 -		->Chass. 6N-WW078 256 ->Chass. 6N-WX078 256 ->Chass. 6N-WY156 681	
Spurstangenkopf / Tie-rod End Konusmaß [mm] / Cone Size [mm]:14 Innengewinde [mm] / Inner Thread [mm]:M14x1,5 Gewindeart: mit Rechtsgewinde / Thread Type: with right-hand thread mit Zubehör / With accessories			**13793** **6N0 419 812**
1.0 10.94 - 1.9 D 10.94 - 1.9 SDI 07.96 -		->Chass. 6N-WW078 256 ->Chass. 6N-WX078 256 ->Chass. 6N-WY156 681	
Spurstangenkopf / Tie-rod End mit Zubehör / With accessories			**24739** **6E0 419 811**
ALL TYPES		Chass. 6N-WY156 682-> Chass. 6N-WW078 257-> Chass. 6N-WX078 257->	
Spurstangenkopf / Tie-rod End mit Zubehör / With accessories			**24740** **6E0 419 812**
ALL TYPES		Chass. 6N-WY156 682-> Chass. 6N-WX078 257-> Chass. 6N-WW078 257->	
Axialgelenk, Spurstange / Axial Rod, tie rod			**28982** **6N0 422 807 A**
1.9 D 10.94 - 1.9 SDI 07.96 -		->Chass. 6N-WY156 681 ->Chass. 6N-WW078 256 ->Chass. 6N-WX078 256	
1.0 10.94 -		->Chass. 6N-WW078 256	
Lenker, Radaufhängung / Track Control Arm ohne Trag-/Führungsgelenk / without support/ steering link mit Gummilager / with rubber mounting nur in Verbindung mit / Only in connection with:13791/13790			**22569** **6N0 407 151 B** 21413 17355
ALL TYPES		->Chass. 6N-Y-050 000	
Trag-/Führungsgelenk / Support-/ Steering Link ohne Zubehör / without accessories			**13790** **6N0 407 365 A**
ALL TYPES		Felgengröße [Zoll] / Rim Size [in]:13 Felgengröße [Zoll] / Rim Size [in]:14	
Trag-/Führungsgelenk / Support-/ Steering Link ohne Zubehör / without accessories			**13791** **6N0 407 365**
ALL TYPES		Felgengröße [Zoll] / Rim Size [in]:13 Felgengröße [Zoll] / Rim Size [in]:14	

VOLKSWAGEN

POLO Kasten/Box/Furgón/Van (6NF) 10.94 -

Lagerung, Lenker / Mounting, wishbone ALL TYPES	I17/A61	**17355**	**6N0 407 181**
Lagerung, Lenker / Mounting, wishbone ALL TYPES	I17/A61	**21413**	**6N0 407 182**
Faltenbalgsatz, Lenkung / Bellow Kit, steering system ALL TYPES		**30175**	**6N0 422 831**
Faltenbalgsatz, Lenkung / Bellow Kit, steering system ALL TYPES		**30176**	**6N0 419 831**

POLO Classic/Saloon/avec coffre (6KV2) 11.95 - 09.01

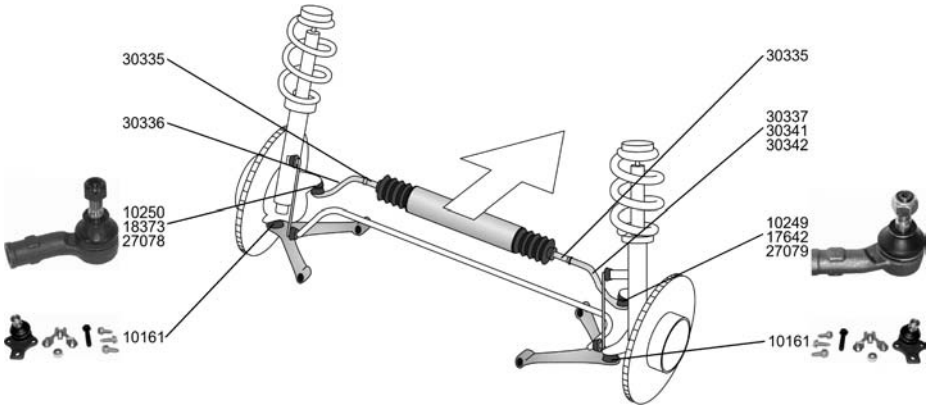

Spurstange / Tie Rod, steering ALL TYPES ausser/except for : 1.8 03.98 -	für Fahrzeuge ohne Sportfahrwerk / For vehicles without sports suspension	**30336**	**6K0 422 803 E**
Spurstange / Tie Rod, steering ALL TYPES ausser/except for : 1.8 03.98 -	für Fahrzeuge ohne Sportfahrwerk / For vehicles without sports suspension	**30337**	**6K0 422 804 E**
Spurstange / Tie Rod, steering ALL TYPES ausser/except for : 1.8 03.98 -	Chass. 6K-Y502 000-> für Fahrzeuge mit Sportfahrwerk / for vehicles with sports suspension	**30341**	**6K0 422 803 F**
Spurstange / Tie Rod, steering ALL TYPES ausser/except for : 1.8 03.98 -	Chass. 6K-Y502 000-> für Fahrzeuge mit Sportfahrwerk / for vehicles with sports suspension	**30342**	**6K0 422 804 F**

VOLKSWAGEN

POLO Classic/Saloon/avec coffre (6KV2) 11.95 - 09.01

Spurstangenkopf / Tie-rod End
Befestigungsart: hängend / Fastening Type: Suspended
Konusmaß [mm] / Cone Size [mm]:14
Innengewinde [mm] / Inner Thread [mm]:M14x1,5
Gewindeart: mit Rechtsgewinde / Thread Type: with right-hand thread
mit Zubehör / With accessories
Gewindemaß / Thread Size:M14x1,5

10249 **191 419 812**

100 1.6	12.95 - 09.01	Chass. 6K-Y-502 000 - Chass. 6K-1-536 000 für Fahrzeuge mit Sportfahrwerk / for vehicles with sports suspension
75 1.6	11.95 - 09.01	
2.0	08.99 - 09.01	
57 1.7 SDI	07.97 - 09.01	
64 1.9 SDI	12.95 - 08.99	
90 1.9 TDI	09.96 - 09.01	
110 1.9 TDI	06.98 - 09.01	
75 1.4 16V	10.99 - 09.01	->Chass. 6K-1-536 000 für Fahrzeuge mit Sportfahrwerk / for vehicles with sports suspension
90 1.8	01.97 - 09.01	
68 1.9 SDI	08.99 - 09.01	

Spurstangenkopf / Tie-rod End
Befestigungsart: hängend / Fastening Type: Suspended
Konusmaß [mm] / Cone Size [mm]:14
Innengewinde [mm] / Inner Thread [mm]:M14x1,5
Gewindeart: mit Rechtsgewinde / Thread Type: with right-hand thread
mit Zubehör / With accessories
Gewindemaß / Thread Size:M14x1,5

10250 **191 419 811**

100 1.6	12.95 - 09.01	Chass. 6K-Y-502 000 - Chass. 6K-1-536 000 für Fahrzeuge mit Sportfahrwerk / for vehicles with sports suspension
75 1.6	11.95 - 09.01	
2.0	08.99 - 09.01	
57 1.7 SDI	07.97 - 09.01	
64 1.9 SDI	12.95 - 08.99	
90 1.9 TDI	09.96 - 09.01	
110 1.9 TDI	06.98 - 09.01	
75 1.4 16V	10.99 - 09.01	->Chass. 6K-1-536 000 für Fahrzeuge mit Sportfahrwerk / for vehicles with sports suspension
90 1.8	01.97 - 09.01	
68 1.9 SDI	08.99 - 09.01	

Spurstangenkopf / Tie-rod End
Gewindeart: mit Rechtsgewinde / Thread Type: with right-hand thread
mit Zubehör / With accessories

17642 **3A0 422 812**

ALL TYPES ausser/except for :		->Chass. 6K-1-536 000
75 1.6	11.95 - 09.97	
1.8	03.98 -	
64 1,9 D	01.96 - 10.96	

Spurstangenkopf / Tie-rod End
Gewindeart: mit Rechtsgewinde / Thread Type: with right-hand thread
mit Zubehör / With accessories

18373 **3A0 422 811**

ALL TYPES ausser/except for :		->Chass. 6K-1-536 000
75 1.6	11.95 - 09.97	
1.8	03.98 -	
64 1,9 D	01.96 - 10.96	

Spurstangenkopf / Tie-rod End
mit Zubehör / With accessories

24739 **6E0 419 811**

ALL TYPES ausser/except for :		Chass. 6K-1-536 000-> für Fahrzeuge mit Sportfahrwerk / for vehicles with sports suspension
75 1.6	11.95 - 09.97	
1.8	03.98 -	
64 1,9 D	01.96 - 10.96	

Spurstangenkopf / Tie-rod End
mit Zubehör / With accessories

24740 **6E0 419 812**

ALL TYPES ausser/except for :		Chass. 6K-1-536 000-> für Fahrzeuge mit Sportfahrwerk / for vehicles with sports suspension
75 1.6	11.95 - 09.97	
1.8	03.98 -	
64 1,9 D	01.96 - 10.96	

Spurstangenkopf / Tie-rod End
mit Zubehör / With accessories

27078 **6K0 422 811**

ALL TYPES ausser/except for :		Chass. 6K-1-536 001->
75 1.6	11.95 - 09.97	
1.8	03.98 -	
64 1,9 D	01.96 - 10.96	

VOLKSWAGEN

POLO Classic/Saloon/avec coffre (6KV2) 11.95 - 09.01

Spurstangenkopf / Tie-rod End mit Zubehör / With accessories			**27079** **6K0 422 812**
ALL TYPES ausser/except for :		Chass. 6K-1-536 001->	
75 1.6	11.95 - 09.97		
1.8	03.98 -		
64 1,9 D	01.96 - 10.96		
Axialgelenk, Spurstange / Axial Rod, tie rod Gewindemaß / Thread Size:M14x1,5			**30335** **6K0 422 804 F** **6K0 422 807 F**
ALL TYPES ausser/except for :			
1.8	03.98 -		
Lenker, Radaufhängung / Track Control Arm ohne Trag-/Führungsgelenk / without support/ steering link mit Gummilager / with rubber mounting nur in Verbindung mit / Only in connection with:10169/10161			**10172** **191 407 151 B** 10203 10205
ALL TYPES ausser/except for :			
75 1.6	11.95 - 09.97		
1.8	03.98 -		
64 1,9 D	01.96 - 10.96		
Trag-/Führungsgelenk / Support-/ Steering Link mit Zubehör / With accessories für OE / for OE 191 407 151 B			**10161** **357 407 365**
ALL TYPES ausser/except for :			
75 1.6	11.95 - 09.97		
1.8	03.98 -		
64 1,9 D	01.96 - 10.96		
Lagerung, Lenker / Mounting, wishbone ohne Montagehülsen / without mounting sleeve			**10205** **191 407 181 E**
ALL TYPES ausser/except for :			
64 1,9 D	01.96 - 10.96		
Lagerung, Lenker / Mounting, wishbone mit Montagehülsen / with mounting sleeve			**25352** **191 407 181 E**
ALL TYPES ausser/except for :			
64 1,9 D	01.96 - 10.96		
Stabilisatorlager / Mounting, Stabilizer		I17	**14341** **191 411 314**
60 1.4	12.95 - 09.01		
75 1.6	11.95 - 09.01		
100 1.6	12.95 - 09.01	->03.1997	
64 1.9 SDI	12.95 - 08.99	->Chass. 6K-V-047 500	
90 1.9 TDI	09.96 - 09.01		
Stabilisatorlager / Mounting, Stabilizer		I19	**27461** **1H0 411 314**
100 1.6	12.95 - 09.01	Mot. AUR 01.2000-> Chass. 6K-Y-504 288->	
90 1.9 TDI	09.96 - 09.01	Mot. AGR 01.2000-> Chass. 6K-Y-504 288->	
110 1.9 TDI	06.98 - 09.01	Mot. ASV 01.2000-> Chass. 6K-Y-504 288->	
68 1.9 SDI	08.99 - 09.01	Mot. AQM 01.2000-> Chass. 6K-Y-504 288->	
Lagerung, Stabilisatorkoppelstange **Mounting, stabilizer coupling rod** Pendelstange / Suspension Rod			**17400** **191 411 327**
60 1.4	12.95 - 09.01	->Chass. 6K-V-047 500	
100 1.6	12.95 - 09.01		
75 1.6	11.95 - 09.01		
64 1.9 SDI	12.95 - 08.99		

VOLKSWAGEN

POLO Classic/Saloon/avec coffre (6KV2) 11.95 - 09.01

Achskörperlager / Mounting, axle body

ALL TYPES ausser/except for :

1.8	03.98 -
64 1,9 D	01.96 - 10.96

21549 **6N0 501 541 D**

Achskörperlager / Mounting, axle body

ALL TYPES ausser/except for :

1.8	03.98 -
64 1,9 D	01.96 - 10.96
75 1.6	11.95 - 09.97

Chass. 6K-Y-502 795->

26820 **6K0 501 541 A**

POLO Variant/Estate/Break (6KV5) 04.97 - 09.01

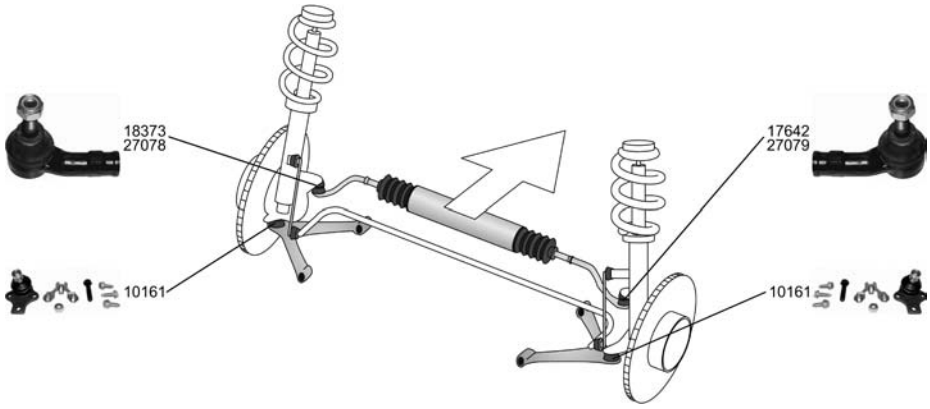

Spurstangenkopf / Tie-rod End
Gewindeart: mit Rechtsgewinde / Thread Type: with right-hand thread
mit Zubehör / With accessories

ALL TYPES ausser/except for :

1.8	03.98 -
2.0	08.99 -
1.9 D	05.96 - 10.96

->Chass. 6K-1-536 000

17642 **3A0 422 812**

Spurstangenkopf / Tie-rod End
Gewindeart: mit Rechtsgewinde / Thread Type: with right-hand thread
mit Zubehör / With accessories

ALL TYPES ausser/except for :

1.8	03.98 -
2.0	08.99 -
1.9 D	05.96 - 10.96

->Chass. 6K-1-536 000

18373 **3A0 422 811**

Spurstangenkopf / Tie-rod End
mit Zubehör / With accessories

ALL TYPES ausser/except for :

1.8	03.98 -
2.0	08.99 -
1.9 D	05.96 - 10.96

Chass. 6K-1-536 000->
für Fahrzeuge mit Sportfahrwerk / for vehicles with sports suspension

24739 **6E0 419 811**

Spurstangenkopf / Tie-rod End
mit Zubehör / With accessories

ALL TYPES ausser/except for :

1.8	03.98 -
2.0	08.99 -
1.9 D	05.96 - 10.96

Chass. 6K-1-536 000->
für Fahrzeuge mit Sportfahrwerk / for vehicles with sports suspension

24740 **6E0 419 812**

Spurstangenkopf / Tie-rod End
mit Zubehör / With accessories

ALL TYPES ausser/except for :

1.8	03.98 -
2.0	08.99 -
1.9 D	05.96 - 10.96

Chass. 6K-1-536 001->

27078 **6K0 422 811**

VOLKSWAGEN

POLO Variant/Estate/Break (6KV5) 04.97 - 09.01

Spurstangenkopf / Tie-rod End mit Zubehör / With accessories			**27079** **6K0 422 812**
ALL TYPES ausser/except for :		Chass. 6K-1-536 001->	
1.8	03.98 -		
2.0	08.99 -		
1.9 D	05.96 - 10.96		
Lenker, Radaufhängung / Track Control Arm ohne Trag-/Führungsgelenk / without support/ steering link mit Gummilager / with rubber mounting nur in Verbindung mit / Only in connection with:10169/10161			**10172** **191 407 151 B** 10203 10205
ALL TYPES ausser/except for :			
1.8	03.98 -		
2.0	08.99 -		
1.9 D	05.96 - 10.96		
Trag-/Führungsgelenk / Support-/ Steering Link mit Zubehör / With accessories für OE / for OE 191 407 151 B			**10161** **357 407 365**
ALL TYPES ausser/except for :			
1.8	03.98 -		
2.0	08.99 -		
1.9 D	05.96 - 10.96		
Lagerung, Lenker / Mounting, wishbone ohne Montagehülsen / without mounting sleeve			**10205** **191 407 181 E**
ALL TYPES			
Lagerung, Lenker / Mounting, wishbone mit Montagehülsen / with mounting sleeve			**25352** **191 407 181 E**
ALL TYPES			
Stabilisatorlager / Mounting, Stabilizer		I17	**14341** **191 411 314**
1.4, 44 kW	05.97 - 09.01		
1.6, 55 kW	05.97 - 09.01		
Stabilisatorlager / Mounting, Stabilizer		I19	**27461** **1H0 411 314**
1.6, 74 kW	05.97 - 09.01	Mot. APF 01.2000-> Chass. 6K-Y-504 288->	
1.9 TDI, 66 kW	05.97 - 09.01	Mot. ALH 01.2000-> Chass. 6K-Y-504 288->	
1.7 SDI	08.97 - 09.01	Chass. 6K-V-047501->	
1.9 SDI, 47 kW	06.97 - 09.01		
1.9 TDI, 81 kW	06.98 - 09.01	Mot. ASV 01.2000-> Chass. 6K-Y-504 288->	
1.9 SDI, 50 kW	08.99 - 09.01	Mot. AQM 01.2000-> Chass. 6K-Y-504 288->	
Achskörperlager / Mounting, axle body			**21549** **6N0 501 541 D**
ALL TYPES ausser/except for :			
1.8	03.98 -		
2.0	08.99 -		
1.9 D	05.96 - 10.96		
Achskörperlager / Mounting, axle body			**26820** **6K0 501 541 A**
1.8	05.97 - 09.01	Chass. 6K-X-610 001->	
1.7 SDI	08.97 - 09.01		
1.9 SDI	06.97 - 09.01		
1.9 TDI	05.97 - 09.01		
1.4	05.97 - 09.01		
1.4 16V	10.99 - 09.01		
1.6	05.97 - 09.01		

VOLKSWAGEN

POLO (6N2) 10.99 - 09.01

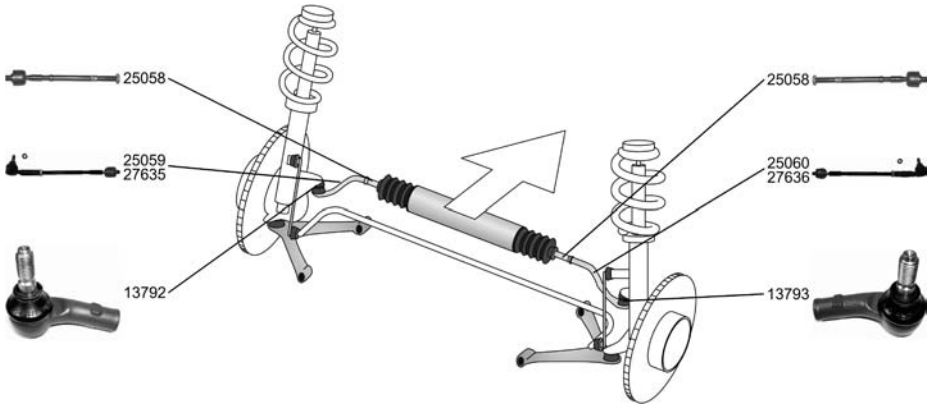

Spurstange / Tie Rod, steering mit Zubehör / With accessories 1.0 10.99 - 09.01 1.4 10.99 - 09.01 1.4 16V, 55 kW 10.99 - 09.01 1.7 SDI 10.99 - 09.01		**25059** **6X0 422 803** 24739 25058
Spurstange / Tie Rod, steering mit Zubehör / With accessories 1.0 10.99 - 09.01 1.4 10.99 - 09.01 1.4 16V, 55 kW 10.99 - 09.01 1.7 SDI 10.99 - 09.01		**25060** **6X0 422 804** 24740 25058
Spurstange / Tie Rod, steering mit Zubehör / With accessories 1.4 16V 10.99 - 09.01 1.6 16V GTI 10.99 - 09.01 1.4 TDI 10.99 - 09.01		**27635** **6N0 422 803 C** 24739 27319
Spurstange / Tie Rod, steering mit Zubehör / With accessories 1.4 16V 10.99 - 09.01 1.6 16V GTI 10.99 - 09.01 1.4 TDI 10.99 - 09.01		**27636** **6N0 422 804 C** 24740 27319
Spurstangenkopf / Tie-rod End Konusmaß [mm] / Cone Size [mm]:14 Innengewinde [mm] / Inner Thread [mm]:M14x1,5 Gewindeart: mit Rechtsgewinde / Thread Type: with right-hand thread mit Zubehör / With accessories ALL TYPES		**13792** **6N0 419 811**
Spurstangenkopf / Tie-rod End Konusmaß [mm] / Cone Size [mm]:14 Innengewinde [mm] / Inner Thread [mm]:M14x1,5 Gewindeart: mit Rechtsgewinde / Thread Type: with right-hand thread mit Zubehör / With accessories ALL TYPES		**13793** **6N0 419 812**
Axialgelenk, Spurstange / Axial Rod, tie rod 1.0 10.99 - 09.01 1.4 10.99 - 09.01 1.7 SDI 10.99 - 09.01 1.9 D 10.99 - 09.01 1.9 SDI 10.99 - 09.01		**25058** **6X0 422 807**

OE

VOLKSWAGEN

POLO (6N2) 10.99 - 09.01

Axialgelenk, Spurstange / Axial Rod, tie rod
mit Zubehör / With accessories

1.4 16V	10.99 - 09.01
1.6 16V GTI	10.99 - 09.01
1.4 TDI	10.99 - 09.01

27319 6N0 422 807 C

Lenker, Radaufhängung / Track Control Arm
nur in Verbindung mit / Only in connection with:Lemförder 13790
nur in Verbindung mit / Only in connection with:Lemförder 13791
mit Gummilager / with rubber mounting
ohne Trag-/Führungsgelenk / without support/ steering link
ohne Befestigungsmaterial / without fastening material

ALL TYPES

27745 6X0 407 151 A
17355

Trag-/Führungsgelenk / Support-/ Steering Link
ohne Zubehör / without accessories

ALL TYPES

Felgengröße [Zoll] / Rim Size [in]:14

13790 6N0 407 365 A

Trag-/Führungsgelenk / Support-/ Steering Link
ohne Zubehör / without accessories

ALL TYPES

Felgengröße [Zoll] / Rim Size [in]:14

13791 6N0 407 365

Lagerung, Lenker / Mounting, wishbone

ALL TYPES

I17/A61

17355 6N0 407 181

Lagerung, Lenker / Mounting, wishbone

ALL TYPES

I17/A61

21413 6N0 407 182

Faltenbalgsatz, Lenkung / Bellow Kit, steering system

ALL TYPES

30175 6N0 422 831

Faltenbalgsatz, Lenkung / Bellow Kit, steering system

ALL TYPES

30176 6N0 419 831

Achskörperlager / Mounting, axle body

ALL TYPES

26820 6K0 501 541 A

VOLKSWAGEN

POLO (9N_) 10.01 -

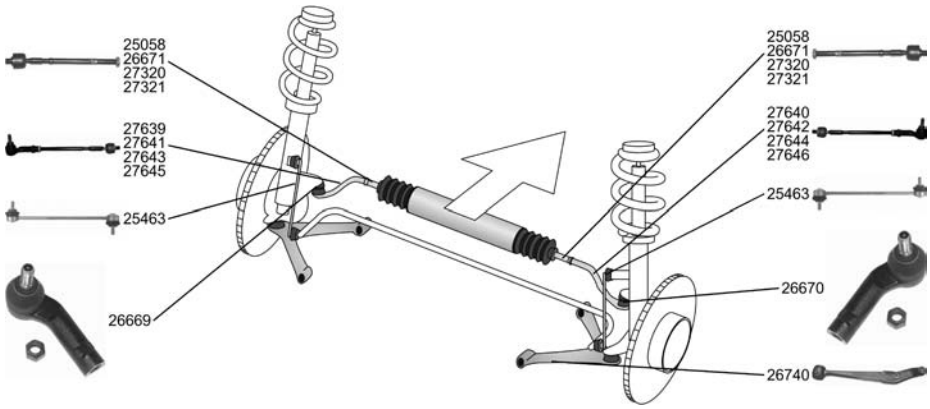

Spurstange / Tie Rod, steering mit Zubehör / With accessories			**27639** **6Q0 419 803 D** 26669 27320
1.2	10.01 - .	->Chass. 9N-2Y230 071	
1.4 16V	10.01 - .	->Chass. 9N-3D159 848	
1.4 FSI	05.02 -		
1.4 TDI, 55 kW	10.01 -		
1.9 SDI	10.01 -		
1.9 TDI, 74 kW	10.01 -		
Spurstange / Tie Rod, steering mit Zubehör / With accessories			**27640** **6Q0 419 804 D** 26670 27320
1.2	10.01 - .	->Chass. 9N-3D159 848	
1.4 16V	10.01 - .	->Chass. 9N-2Y230 071	
1.4 FSI	05.02 -		
1.4 TDI, 55 kW	10.01 -		
1.9 SDI	10.01 -		
1.9 TDI, 74 kW	10.01 -		
Spurstange / Tie Rod, steering für Lenkgetriebe-ID / For steering rack ID:TRW elec./hydr. mit Zubehör / With accessories			**27641** **6Q0 423 803 B** 26669 25058
1.2	10.01 - .	->Chass. 9N-3-190 000	
1.4 16V	10.01 - .		
1.4 FSI	05.02 -		
1.4 TDI, 55 kW	10.01 -		
1.9 SDI	10.01 -		
1.9 TDI, 74 kW	10.01 -		
Spurstange / Tie Rod, steering für Lenkgetriebe-ID / For steering rack ID:TRW elec./hydr. mit Zubehör / With accessories			**27642** **6Q0 423 804 B** 26670 25058
1.2	10.01 - .	->Chass. 9N-3-190 000	
1.4 16V	10.01 - .		
1.4 FSI	05.02 -		
1.4 TDI, 55 kW	10.01 -		
1.9 SDI	10.01 -		
1.9 TDI, 74 kW	10.01 -		
Spurstange / Tie Rod, steering für Lenkgetriebe-ID / For steering rack ID:TRW elec./hydr. mit Zubehör / With accessories			**27643** **6Q0 423 803 E** 26669 27321
1.2	10.01 - .	Chass. 9N-3-190 000->	
1.4 16V	10.01 - .		
1.4 FSI	05.02 -		
1.4 TDI, 55 kW	10.01 -		
1.9 SDI	10.01 -		
1.9 TDI, 74 kW	10.01 -		
1.9 TDI, 96 kW	11.03 -		

VOLKSWAGEN

POLO (9N_) 10.01 -

Spurstange / Tie Rod, steering
für Lenkgetriebe-ID / For steering rack ID:TRW
elec./hydr.
mit Zubehör / With accessories

27644 **6Q0 423 804 E**
26670
27321

1.2	10.01 - .	Chass. 9N-3-190 000->
1.4 16V	10.01 - .	
1.4 FSI	05.02 -	
1.4 TDI, 55 kW	10.01 -	
1.9 SDI	10.01 -	
1.9 TDI, 74 kW	10.01 -	
1.9 TDI, 96 kW	11.03 -	

Spurstange / Tie Rod, steering
für Lenkgetriebe-ID / For steering rack ID:SM-Koyo
für / for:KOYO
elec./hydr.
mit Zubehör / With accessories

27645 **6Q0 423 803 G**
26669
26671

ALL TYPES ausser/except for :		
1.8 GTI	09.05 -	
1.4 TDI, 51 kW	04.05 -	
1.4 TDI, 59 kW	04.05 -	

Spurstange / Tie Rod, steering
für Lenkgetriebe-ID / For steering rack ID:SMI-Koyo
für / for:KOYO
elec./hydr.
mit Zubehör / With accessories

27646 **6Q0 423 804 G**
26670
26671

ALL TYPES ausser/except for :		Chass. 9N-2Y045 645->
1.8 GTI	09.05 -	Chass. 9N-3D042 082 - Chass. 9N-2Y230 071
1.4 TDI, 51 kW	04.05 -	->Chass. 9N-3D159 848
1.4 TDI, 59 kW	04.05 -	

Spurstangenkopf / Tie-rod End

26669 **6Q0 423 811 C**

ALL TYPES ausser/except for :	
1.8 GTI	09.05 -
1.4 TDI, 51 kW	04.05 -
1.4 TDI, 59 kW	04.05 -

Spurstangenkopf / Tie-rod End

26670 **6Q0 423 812 C**

ALL TYPES ausser/except for :	
1.8 GTI	09.05 -
1.4 TDI, 51 kW	04.05 -
1.4 TDI, 59 kW	04.05 -

Axialgelenk, Spurstange / Axial Rod, tie rod

25058 **6X0 422 807**

ALL TYPES ausser/except for :		->Chass. 9N-3-900 000
1.8 GTI	09.05 -	für Lenkgetriebe-ID / For steering rack ID:TRW
1.4 TDI, 51 kW	04.05 -	
1.4 TDI, 59 kW	04.05 -	

Axialgelenk, Spurstange / Axial Rod, tie rod
für Lenkgetriebe-ID / For steering rack ID:SMI-Koyo
für / for:KOYO
elec./hydr.

26671 **6Q0 423 810 G**

1.2	10.01 - .
1.4 16V	10.01 - .
1.4 FSI	05.02 -
1.4 TDI, 55 kW	10.01 -
1.9 SDI	10.01 -
1.9 TDI, 74 kW	10.01 -

Axialgelenk, Spurstange / Axial Rod, tie rod
mit Zubehör / With accessories

27320 **6Q0 419 807 D**

1.2	10.01 - .	->Chass. 9N-3D159 848
1.4 16V	10.01 - .	->Chass. 9N-3Y230 071
1.4 FSI	05.02 -	
1.4 TDI, 55 kW	10.01 -	
1.9 SDI	10.01 -	
1.9 TDI, 74 kW	10.01 -	

VOLKSWAGEN

POLO (9N_) 10.01 -

Axialgelenk, Spurstange / Axial Rod, tie rod
für Lenkgetriebe-ID / For steering rack ID:TRW
mit Zubehör / With accessories

ALL TYPES ausser/except for :		Chass. 9N-3-900 001->
1.8 GTI	09.05 -	
1.4 TDI, 51 kW	04.05 -	
1.4 TDI, 59 kW	04.05 -	

27321 6Q0 423 810 E

Lenker, Radaufhängung / Track Control Arm

ALL TYPES ausser/except for :		Chass. 9N-2Y045 645->
1.8 GTI	09.05 -	Chass. 9N-3D042 082 - Chass. 9N-2Y230 071
1.4 TDI, 51 kW	04.05 -	->Chass. 9N-3D159 848
1.4 TDI, 59 kW	04.05 -	

26740

Lenker, Radaufhängung / Track Control Arm
mit Gummilager / with rubber mounting

ALL TYPES ausser/except for :	
1.8 GTI	09.05 -

28644 6Q0 407 151 E
29709

Trag-/Führungsgelenk / Support-/ Steering Link

1.2, 47 kW	10.01 -	
1.4 16V	10.01 - .	
1.4 FSI	05.02 -	
1.4 TDI, 55 kW	10.01 -	
1.9 SDI	10.01 -	
1.9 TDI	10.01 - .	
1.2, 40 kW	01.02 -	----------

25524 6Q0 407 365 A

Trag-/Führungsgelenk / Support-/ Steering Link

1.2, 47 kW	10.01 -	
1.4 16V	10.01 - .	
1.4 FSI	05.02 -	
1.4 TDI, 55 kW	10.01 -	
1.9 SDI	10.01 -	
1.9 TDI	10.01 - .	
1.2, 40 kW	01.02 -	----------

25525 6Q0 407 366 A

Lagerung, Lenker / Mounting, wishbone

ALL TYPES ausser/except for :	
1.8 GTI	09.05 -

29709 6Q0 407 182 A

Lagerung, Lenker / Mounting, wishbone

ALL TYPES ausser/except for :	
1.8 GTI	09.05 -

29710 6Q0 407 183 A

Stange/Strebe, Stabilisator / Rod/Strut, stabiliser
Pendelstange / Suspension Rod

ALL TYPES ausser/except for :	
1.8 GTI	09.05 -

25463 6Q0 411 315 J

Faltenbalgsatz, Lenkung / Bellow Kit, steering system

ALL TYPES ausser/except for :	
1.8 GTI	09.05 -

für / for:TRW
->Chass. 9N-3Y201 497
->Chass. 9N-3D150 674

30235 6E0 419 831

Achskörperlager / Mounting, axle body
Hydrolager paarweise durch konventionelles Lager ersetzen. / change hydro bearing in pairs by conventional bearing

A71,40

ALL TYPES ausser/except for :	
1.8 GTI	09.05 -
1.4 TDI, 51 kW	04.05 -
1.4 TDI, 59 kW	04.05 -

21236 1J0 501 541 C

VOLKSWAGEN

POLO (9N_) 10.01 -

Achskörperlager / Mounting, axle body mit Zubehör / With accessories		**27627** **1J0 501 541 C**
ALL TYPES ausser/except for : 1.8 GTI 09.05 - 1.4 TDI, 51 kW 04.05 - 1.4 TDI, 59 kW 04.05 -		

POLO Stufenheck/Saloon/avec coffre 07.03 -

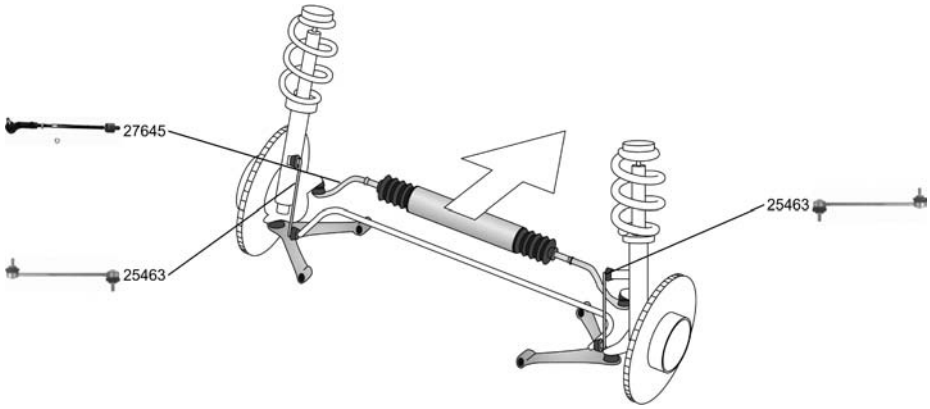

Spurstange / Tie Rod, steering für Lenkgetriebe-ID / For steering rack ID:SM-Koyo für / for:KOYO elec./hydr. mit Zubehör / With accessories		**27645** **6Q0 423 803 G** 26669 26671
ALL TYPES		
Lenker, Radaufhängung / Track Control Arm mit Gummilager / with rubber mounting		**28644** **6Q0 407 151 E** 29709
ALL TYPES		
Trag-/Führungsgelenk / Support-/ Steering Link		**25524** **6Q0 407 365 A**
ALL TYPES		
Trag-/Führungsgelenk / Support-/ Steering Link		**25525** **6Q0 407 366 A**
ALL TYPES		
Lagerung, Lenker / Mounting, wishbone		**29709** **6Q0 407 182 A**
ALL TYPES		
Lagerung, Lenker / Mounting, wishbone		**29710** **6Q0 407 183 A**
ALL TYPES		
Stange/Strebe, Stabilisator / Rod/Strut, stabiliser Pendelstange / Suspension Rod		**25463** **6Q0 411 315 J**
ALL TYPES		

VOLKSWAGEN

POLO Stufenheck/Saloon/avec coffre 07.03 -

Achskörperlager / Mounting, axle body Hydrolager paarweise durch konventionelles Lager ersetzen. / change hydro bearing in pairs by conventional bearing ALL TYPES	A71,40	**21236**	**1J0 501 541 C**
Achskörperlager / Mounting, axle body mit Zubehör / With accessories ALL TYPES		**27627**	**1J0 501 541 C**

SANTANA 01.95 -

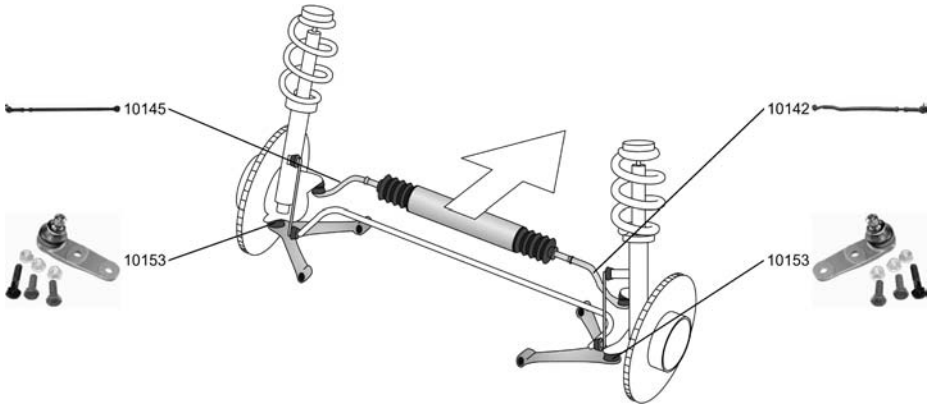

Spurstange / Tie Rod, steering ALL TYPES	LHD	**10142** 10143	**811 419 802 J**
Spurstange / Tie Rod, steering verstellbar / Adjustable ALL TYPES	LHD	**10145** 10143 10143	**811 419 801 E**
Spurstangenkopf / Tie-rod End Innengewinde [mm] / Inner Thread [mm]:M14x1,5 Gewindeart: mit Rechtsgewinde / Thread Type: with right-hand thread ALL TYPES		**10143**	**811 419 812 A**
Trag-/Führungsgelenk / Support-/ Steering Link ALL TYPES		**10153**	**823 407 365 E**
Faltenbalgsatz, Lenkung / Bellow Kit, steering system ALL TYPES		**30128**	**811 419 831 B**

VOLKSWAGEN

SCIROCCO (53B) 08.80 - 07.92

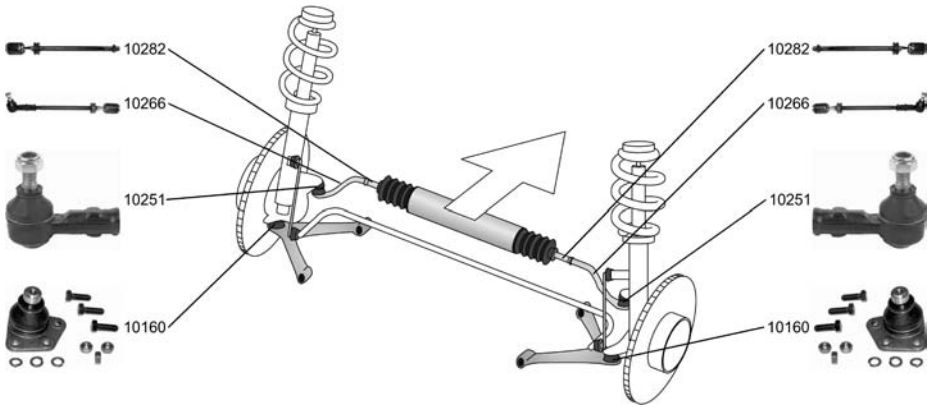

Spurstange / Tie Rod, steering Konusmaß [mm] / Cone Size [mm]:14 Rohr-Ø [mm] / Pipe Ø [mm]:14		**10266**
1.3, 44 kW	08.80 - 12.83	
1.5	08.80 - 12.83	
1.6, 55 kW	01.83 - 12.89	
1.6, 63 kW	08.80 - 04.84	
1.6, 81 kW	08.80 - 07.82	
1.6, 53 kW	04.86 - 07.90	
1.8, 66 kW	08.83 - 07.92	
1.8, 70 kW	11.85 - 07.92	
1.8, 82 kW	08.82 - 12.89	
1.8 16V	10.85 - 07.92	
Spurstangenkopf / Tie-rod End Konusmaß [mm] / Cone Size [mm]:14 Innengewinde [mm] / Inner Thread [mm]:M14x1,5 Gewindeart: mit Rechtsgewinde / Thread Type: with right-hand thread mit Zubehör / With accessories Gewindemaß / Thread Size:M14x1,5		**10251** **171 419 812**
1.3, 44 kW	08.80 - 12.83	
1.5	08.80 - 12.83	
1.6, 55 kW	01.83 - 12.89	
1.6, 63 kW	08.80 - 04.84	
1.6, 81 kW	08.80 - 07.82	
1.6, 53 kW	04.86 - 07.90	
1.8, 66 kW	08.83 - 07.92	
1.8, 70 kW	11.85 - 07.92	
1.8, 82 kW	08.82 - 12.89	
1.8 16V	10.85 - 07.92	
1.3, 44 kW	08.80 - 12.83	
1.5	08.80 - 12.83	
1.6, 55 kW	01.83 - 12.89	
1.6, 63 kW	08.80 - 04.84	
1.6, 81 kW	08.80 - 07.82	
1.6, 53 kW	04.86 - 07.90	
1.8, 66 kW	08.83 - 07.92	
1.8, 70 kW	11.85 - 07.92	
1.8, 82 kW	08.82 - 12.89	
1.8 16V	10.85 - 07.92	
Axialgelenk, Spurstange / Axial Rod, tie rod Gewindemaß / Thread Size:M22x1,5 Gewindeart: mit Rechtsgewinde / Thread Type: with right-hand thread für OE / for OE 025 390 045 617		**10282** **171 419 807 A**
1.3, 44 kW	08.80 - 12.83	
1.5	08.80 - 12.83	
1.6, 55 kW	01.83 - 12.89	
1.6, 63 kW	08.80 - 04.84	
1.6, 81 kW	08.80 - 07.82	
1.6, 53 kW	04.86 - 07.90	
1.8, 66 kW	08.83 - 07.92	
1.8, 70 kW	11.85 - 07.92	
1.8, 82 kW	08.82 - 12.89	
1.8 16V	10.85 - 07.92	

VOLKSWAGEN

SCIROCCO (53B) 08.80 - 07.92

Lenker, Radaufhängung / Track Control Arm
ohne Trag-/Führungsgelenk / without support/ steering link
ohne Gummilager / without rubber mounting

10165 **171 407 153 D**

1.3, 44 kW	08.80 - 12.83
1.5	08.80 - 12.83
1.6, 55 kW	01.83 - 12.89
1.6, 63 kW	08.80 - 04.84
1.6, 81 kW	08.80 - 07.82
1.6, 53 kW	04.86 - 07.90
1.8, 66 kW	08.83 - 07.92
1.8, 70 kW	11.85 - 07.92
1.8, 82 kW	08.82 - 12.89
1.8 16V	10.85 - 07.92

Trag-/Führungsgelenk / Support-/ Steering Link

A17

Chass. 178-3173-584->

10160 **171 407 365 F**

1.3, 44 kW	08.80 - 12.83
1.5	08.80 - 12.83
1.6, 55 kW	01.83 - 12.89
1.6, 63 kW	08.80 - 04.84
1.6, 81 kW	08.80 - 07.82
1.6, 53 kW	04.86 - 07.90
1.8, 66 kW	08.83 - 07.92
1.8, 70 kW	11.85 - 07.92
1.8, 82 kW	08.82 - 12.89
1.8 16V	10.85 - 07.92

Trag-/Führungsgelenk / Support-/ Steering Link
Bohrung-Ø 1 / Bohrung-Ø 2 [mm] / Bore Ø 1 / Bore Ø 2 [mm]:7,0

->Chass. 178-3173-583

13779 **171 407 365 C**

1.3, 44 kW	08.80 - 12.83
1.5	08.80 - 12.83
1.6, 55 kW	01.83 - 12.89
1.6, 63 kW	08.80 - 04.84
1.6, 81 kW	08.80 - 07.82
1.6, 53 kW	04.86 - 07.90
1.8, 66 kW	08.83 - 07.92
1.8, 70 kW	11.85 - 07.92
1.8, 82 kW	08.82 - 12.89
1.8 16V	10.85 - 07.92

Lagerung, Lenker / Mounting, wishbone

10202 **171 407 182 D**

1.3, 44 kW	08.80 - 12.83
1.5	08.80 - 12.83
1.6, 55 kW	01.83 - 12.89
1.6, 63 kW	08.80 - 04.84
1.6, 81 kW	08.80 - 07.82
1.6, 53 kW	04.86 - 07.90
1.8, 66 kW	08.83 - 07.92
1.8, 70 kW	11.85 - 07.92
1.8, 82 kW	08.82 - 12.89
1.8 16V	10.85 - 07.92

Faltenbalgsatz, Lenkung / Bellow Kit, steering system

30111 **1H0 422 831 B**

1.3, 44 kW	08.80 - 12.83
1.5	08.80 - 12.83
1.6, 55 kW	01.83 - 12.89
1.6, 63 kW	08.80 - 04.84
1.6, 81 kW	08.80 - 07.82
1.6, 53 kW	04.86 - 07.90
1.8, 66 kW	08.83 - 07.92
1.8, 70 kW	11.85 - 07.92
1.8, 82 kW	08.82 - 12.89
1.8 16V	10.85 - 07.92

Faltenbalgsatz, Lenkung / Bellow Kit, steering system

30117 **171 419 832 C/S**

1.3, 44 kW	08.80 - 12.83
1.5	08.80 - 12.83
1.6, 55 kW	01.83 - 12.89
1.6, 63 kW	08.80 - 04.84
1.6, 81 kW	08.80 - 07.82
1.6, 53 kW	04.86 - 07.90
1.8, 66 kW	08.83 - 07.92
1.8, 70 kW	11.85 - 07.92
1.8, 82 kW	08.82 - 12.89
1.8 16V	10.85 - 07.92

VOLKSWAGEN

SHARAN (7M8, 7M9, 7M6) 05.95 -

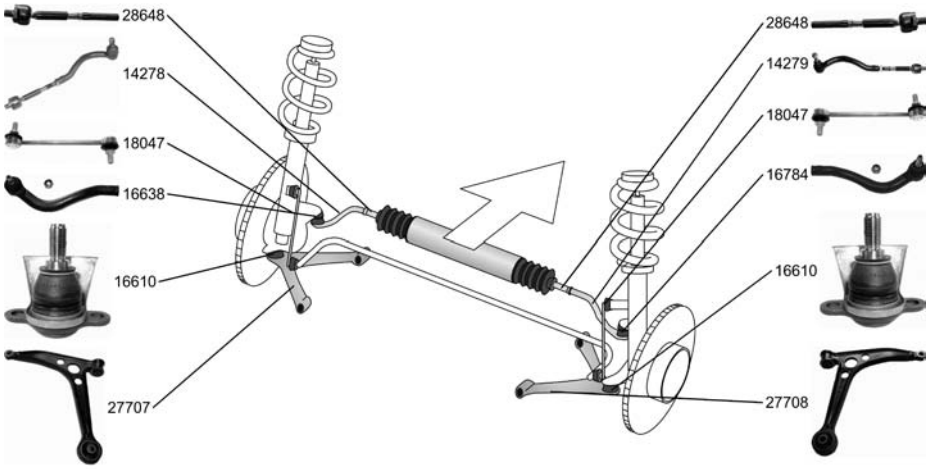

Spurstange / Tie Rod, steering			**14278** **7M3 422 803**
1.8 T 20V	09.97 -	->Chass. 7M-3-519-500	
2.0	09.95 -		
2.8 V6 24V	04.00 -		
2.8 V6 24V 4motion	04.00 -		
1.9 TDI, 66 kW	09.95 -		
1.9 TDI, 85 kW	04.00 -		
1.9 TDI 4motion	04.00 -		
1.9 TDI, 96 kW	11.02 -		
2.8 VR6	09.95 - 04.00		
2.8 VR6 Syncro	11.96 - 04.00		
1.9 TDI, 81 kW	09.96 - 04.00		
Spurstange / Tie Rod, steering			**14279** **7M3 422 804**
1.8 T 20V	09.97 -	->Chass. 7M-3-519 500	
2.0	09.95 -		
2.8 V6 24V	04.00 -		
2.8 V6 24V 4motion	04.00 -		
1.9 TDI, 66 kW	09.95 -		
1.9 TDI, 85 kW	04.00 -		
1.9 TDI 4motion	04.00 -		
1.9 TDI, 96 kW	11.02 -		
2.8 VR6	09.95 - 04.00		
2.8 VR6 Syncro	11.96 - 04.00		
1.9 TDI, 81 kW	09.96 - 04.00		
Spurstangenkopf / Tie-rod End Gewindeart: mit Rechtsgewinde / Thread Type: with right-hand thread			**16638** **7M3 422 818**
ALL TYPES ausser/except for :		->Chass. 7M-3-519 500	
2.0 16V	08.96 - 04.00		
1.9 TDI, 110 kW	06.05 -		
Spurstangenkopf / Tie-rod End Gewindeart: mit Rechtsgewinde / Thread Type: with right-hand thread			**16784** **7M3 422 818**
ALL TYPES ausser/except for :		->Chass. 7M-3-519 500	
2.0 16V	08.96 - 04.00		
1.9 TDI, 110 kW	06.05 -		
Axialgelenk, Spurstange / Axial Rod, tie rod			**28648**
ALL TYPES ausser/except for :			
1.9 TDI, 110 kW	06.05 -		
Lenker, Radaufhängung / Track Control Arm mit Gummilager / with rubber mounting nur in Verbindung mit / Only in connection with:16610 separat bestellen / Order separately			**27707** **7M0 407 151 B** 25291
ALL TYPES ausser/except for :			
2.0 16V	08.96 - 04.00		
1.9 TDI, 110 kW	06.05 -		

VOLKSWAGEN

SHARAN (7M8, 7M9, 7M6) 05.95 -

Lenker, Radaufhängung / Track Control Arm
mit Gummilager / with rubber mounting
nur in Verbindung mit / Only in connection with:16610
separat bestellen / Order separately

ALL TYPES ausser/except for :

2.0 16V	08.96 - 04.00
1.9 TDI, 110 kW	06.05 -

27708 **7M0 407 152 B**
25291

Trag-/Führungsgelenk / Support-/ Steering Link

ALL TYPES ausser/except for :

2.0 16V	08.96 - 04.00
1.9 TDI, 110 kW	06.05 -

16610 **7M3 407 365 A**

Lagerung, Lenker / Mounting, wishbone I18/A60

ALL TYPES ausser/except for :

2.0 16V	08.96 - 04.00
1.9 TDI, 110 kW	06.05 -

17683 **7M0 407 181 A**

Lagerung, Lenker / Mounting, wishbone

ALL TYPES ausser/except for :

2.0 16V	08.96 - 04.00
1.9 TDI, 110 kW	06.05 -

25291 **7M0 501 541**

Stange/Strebe, Stabilisator / Rod/Strut, stabiliser
Pendelstange / Suspension Rod
mit Zubehör / With accessories

ALL TYPES ausser/except for :

2.0 16V	08.96 - 04.00

18047 **7M3 411 317 C**

Faltenbalgsatz, Lenkung / Bellow Kit, steering system
Innendurchmesser 1 [mm] / Inner Diameter 1 [mm]:10
Innendurchmesser 2 [mm] / Inner Diameter 2 [mm]:49

ALL TYPES

30192 **7M0 422 831 B**

Achskörperlager / Mounting, axle body

1.8 T 20V	09.97 -
2.0	09.95 -
2.8 VR6	09.95 - 04.00
2.8 V6 24V	04.00 -
1.9 TDI, 66 kW	09.95 -
1.9 TDI, 81 kW	09.96 - 04.00
1.9 TDI, 85 kW	04.00 -
1.9 TDI, 96 kW	11.02 -

26091 **7M0 505 221 C**

VOLKSWAGEN

TARO 04.89 - 03.97

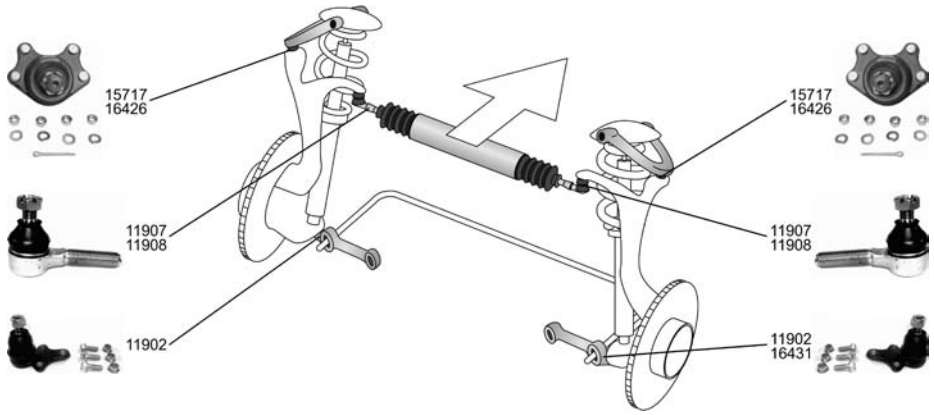

Spurstangenkopf / Tie-rod End Gewindeart: mit Linksgewinde / Thread Type: With left-hand thread Gewindemaß / Thread Size:M17x1,5 Aussengewinde [mm] / Outer Thread [mm]:M17x1,5 ALL TYPES ausser/except for : 2.4 D 4x4, 61 kW 04.89 - 03.97		**11907**
Spurstangenkopf / Tie-rod End Gewindeart: mit Rechtsgewinde / Thread Type: with right-hand thread Gewindemaß / Thread Size:M17x1,5 Aussengewinde [mm] / Outer Thread [mm]:M17x1,5 ALL TYPES ausser/except for : 2.4 D 4x4, 61 kW 04.89 - 03.97		**11908** J45 406 391 15
Trag-/Führungsgelenk / Support-/ Steering Link Konusmaß [mm] / Cone Size [mm]:18,2 ALL TYPES ausser/except for : 2.4 i 4x4 06.89 - 03.97 2.4 D 4x4 04.89 - 03.97		**11902** J43 330 392 95
Trag-/Führungsgelenk / Support-/ Steering Link Konusmaß [mm] / Cone Size [mm]:17,1 2.4 i 4x4 06.89 - 03.97 2.4 D 4x4, 58 kW 07.94 - 03.97		**15717** J43 350 390 75
Trag-/Führungsgelenk / Support-/ Steering Link ALL TYPES ausser/except for : 2.4 i 4x4 06.89 - 03.97 2.4 D 4x4 04.89 - 03.97		**16426** J43 350 390 75
Trag-/Führungsgelenk / Support-/ Steering Link 2.4 i 4x4 06.89 - 03.97 2.4 D 4x4, 58 kW 07.94 - 03.97		**16431** J43 340 392 45

VOLKSWAGEN

TOUAREG (7LA) 10.02 -

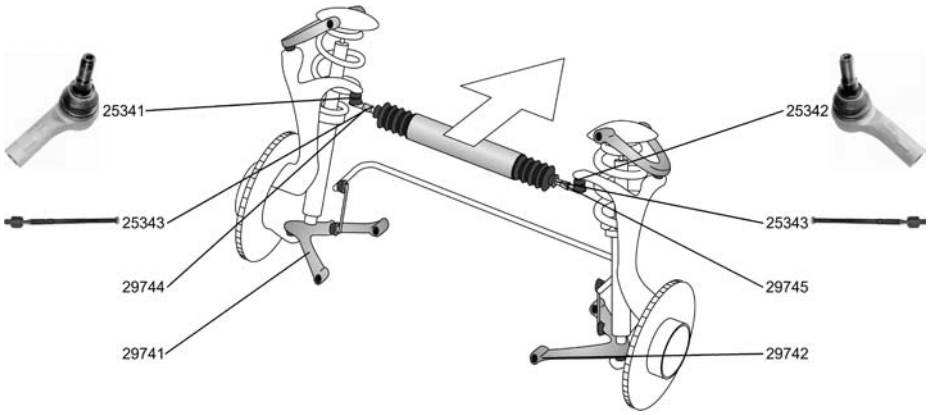

Spurstange / Tie Rod, steering ALL TYPES ausser/except for : 3.6 V6 FSI 03.06 -		**29744** 25343 25341	**7L0 422 803 C**
Spurstange / Tie Rod, steering ALL TYPES ausser/except for : 3.6 V6 FSI 03.06 -		**29745** 25343 25342	**7L0 422 804 C**
Spurstangenkopf / Tie-rod End ALL TYPES ausser/except for : 3.6 V6 FSI 03.06 -		**25341**	**7L0 422 817 C**
Spurstangenkopf / Tie-rod End ALL TYPES ausser/except for : 3.6 V6 FSI 03.06 -		**25342**	**7L0 422 818 C**
Axialgelenk, Spurstange / Axial Rod, tie rod ALL TYPES ausser/except for : 3.6 V6 FSI 03.06 -		**25343**	**7L0 422 821**
Lenker, Radaufhängung / Track Control Arm ALL TYPES ausser/except for : 3.6 V6 FSI 03.06 -		**29740**	**7L0 407 021 A**
Lenker, Radaufhängung / Track Control Arm ALL TYPES ausser/except for : 3.6 V6 FSI 03.06 -		**29741**	**7L0 407 151 E**
Lenker, Radaufhängung / Track Control Arm ALL TYPES ausser/except for : 3.6 V6 FSI 03.06 -		**29742**	**7L0 407 152 E**
Stange/Strebe, Stabilisator / Rod/Strut, stabiliser Pendelstange / Suspension Rod ALL TYPES ausser/except for : 3.6 V6 FSI 03.06 -		**30583**	**7L0 411 317**
Stange/Strebe, Stabilisator / Rod/Strut, stabiliser Pendelstange / Suspension Rod mit Zubehör / With accessories ALL TYPES ausser/except for : 3.6 V6 FSI 03.06 -		**26050**	**7L0 505 465 B**

VOLKSWAGEN

TOUAREG (7LA) 10.02 -

Stange/Strebe, Stabilisator / Rod/Strut, stabiliser Pendelstange / Suspension Rod mit Zubehör / With accessories ALL TYPES ausser/except for : 3.6 V6 FSI 03.06 -		**26051** **7L0 505 466 B**

TOURAN 02.03 -

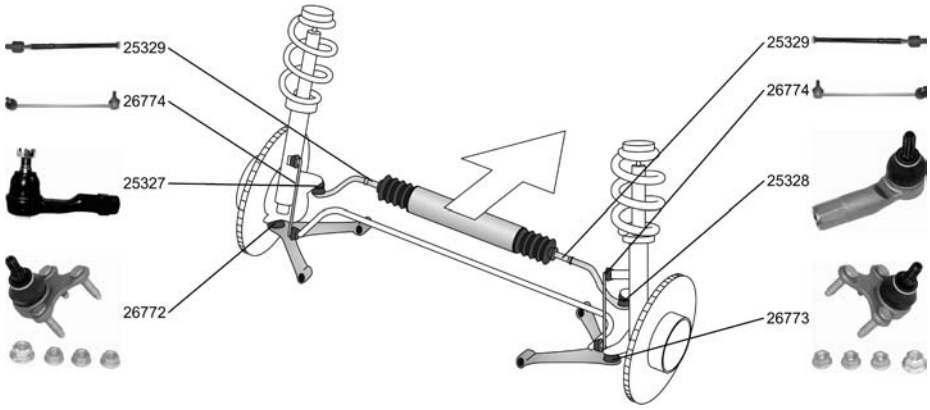

Spurstangenkopf / Tie-rod End ALL TYPES ausser/except for : 1.9 TDI, 66 kW 11.04 -		**25327** **1K0 423 811 G**
Spurstangenkopf / Tie-rod End ALL TYPES ausser/except for : 1.9 TDI, 66 kW 11.04 -		**25328** **1K0 423 812 G**
Axialgelenk, Spurstange / Axial Rod, tie rod Betriebsart: elektrisch / Operating Mode: Electric ALL TYPES ausser/except for : 1.9 TDI, 66 kW 11.04 -		**25329** **1K0 423 810 A**
Trag-/Führungsgelenk / Support-/ Steering Link ALL TYPES ausser/except for : 1.9 TDI, 66 kW 11.04 -		**26772** **1K0 407 365 C**
Trag-/Führungsgelenk / Support-/ Steering Link ALL TYPES ausser/except for : 1.9 TDI, 66 kW 11.04 -		**26773** **1K0 407 366 C**
Lagerung, Lenker / Mounting, wishbone ALL TYPES ausser/except for : 1.9 TDI, 66 kW 11.04 -		**29916** **1K0 407 182**
Stange/Strebe, Stabilisator / Rod/Strut, stabiliser Pendelstange / Suspension Rod ALL TYPES ausser/except for : 1.9 TDI, 66 kW 11.04 -		**26774** **1K0 411 315 D**

VOLKSWAGEN

TOURAN 02.03 -

Lagerung, Lenker / Mounting, wishbone ALL TYPES		27306 1K0 505 553
Lagerung, Lenker / Mounting, wishbone ALL TYPES ausser/except for : 1.9 TDI, 66 kW 11.04 -		29917 1K0 505 171 C
Lagerung, Lenker / Mounting, wishbone ALL TYPES ausser/except for : 1.9 TDI, 66 kW 11.04 -		29918 1K0 505 203 A
Lagerung, Lenker / Mounting, wishbone ALL TYPES ausser/except for : 1.9 TDI, 66 kW 11.04 -		29919 1K0 505 279 A
Lagerung, Lenker / Mounting, wishbone ALL TYPES		29920 1K0 505 541 C
Stange/Strebe, Stabilisator / Rod/Strut, stabiliser Pendelstange / Suspension Rod mit Zubehör / With accessories ALL TYPES ausser/except for : 1.9 TDI, 66 kW 11.04 -		26775 1K0 505 465 K

TRANSPORTER T3 Bus/Familial 05.79 - 07.92

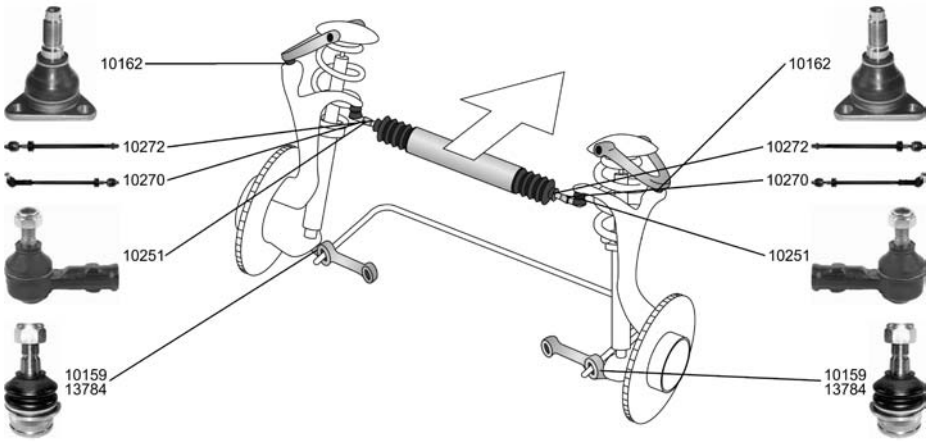

Spurstange / Tie Rod, steering Konusmaß [mm] / Cone Size [mm]:14 Rohr-Ø [mm] / Pipe Ø [mm]:14 ALL TYPES ausser/except for : 1900 08.85 - 12.92		10270 251 419 803

VOLKSWAGEN

TRANSPORTER T3 Bus/Familial 05.79 - 07.92

Spurstangenkopf / Tie-rod End
Konusmaß [mm] / Cone Size [mm]:14
Innengewinde [mm] / Inner Thread [mm]:M14x1,5
Gewindeart: mit Rechtsgewinde / Thread Type: with right-hand thread
mit Zubehör / With accessories
Gewindemaß / Thread Size:M14x1,5

ALL TYPES ausser/except for :
1900 08.85 - 12.92

10251 **171 419 812**

Axialgelenk, Spurstange / Axial Rod, tie rod
Gewindemaß / Thread Size:M14x1,5
Gewindeart: mit Rechtsgewinde / Thread Type: with right-hand thread
mit Zubehör / With accessories
für OE / for OE 025 390 036 617

ALL TYPES ausser/except for :
1900 08.85 - 12.92

10272 **251 419 807 A**

Trag-/Führungsgelenk / Support-/ Steering Link
mit Zubehör / With accessories
Standardmaß / Standard Size

48,3

ALL TYPES ausser/except for :
1900 08.85 - 12.92

10159 **251 407 187**

Trag-/Führungsgelenk / Support-/ Steering Link

ALL TYPES ausser/except for :
1900 08.85 - 12.92

10162 **251 407 361**

Trag-/Führungsgelenk / Support-/ Steering Link
1.Übermaß / 1st Oversize

A48,6

ALL TYPES ausser/except for :
1900 08.85 - 12.92

13784 **251 407 187 C**

Lagerung, Lenker / Mounting, wishbone

ALL TYPES ausser/except for :
1900 08.85 - 12.92

10174 **251 407 077**

Lagerung, Lenker / Mounting, wishbone

I12/A43,5

ALL TYPES ausser/except for :
1900 08.85 - 12.92

10209 **251 407 183**

Stabilisatorlager / Mounting, Stabilizer

I26/A66

ALL TYPES ausser/except for :
1900 08.85 - 12.92

14378 **251 407 175**

Faltenbalgsatz, Lenkung / Bellow Kit, steering system

ALL TYPES ausser/except for :
1900 08.85 - 12.92

30121 **251 419 831 A**

Gelenk, Lenkwelle / Joint, steering shaft
Gelenkscheibe / Disc Joint

ALL TYPES ausser/except for :
1900 08.85 - 12.92

14313 **251 419 417 B**

VOLKSWAGEN

TRANSPORTER T3 Bus/Familial 05.79 - 07.92

Achskörperlager / Mounting, axle body — I12/A47 — **10197** — **251 501 131 A**

ALL TYPES ausser/except for :
1900 08.85 - 12.92

TRANSPORTER T3 Kasten/Box/Furgón/Van 05.79 - 07.92

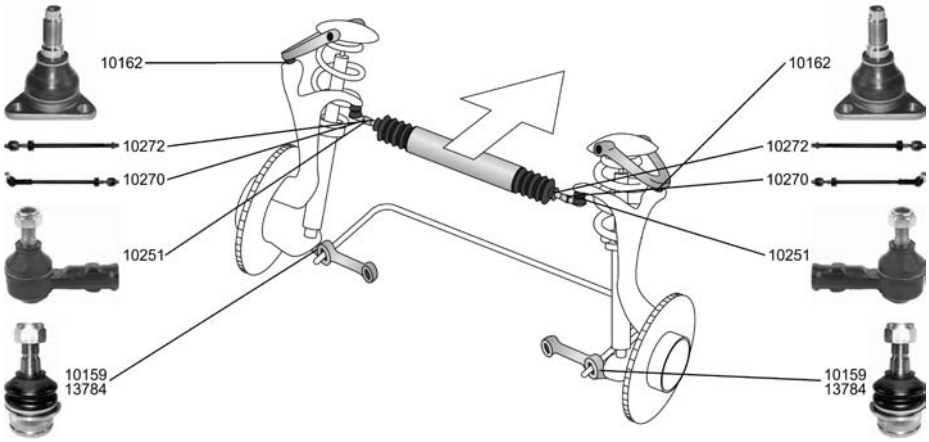

Spurstange / Tie Rod, steering — **10270** — **251 419 803**
Konusmaß [mm] / Cone Size [mm]:14
Rohr-Ø [mm] / Pipe Ø [mm]:14

ALL TYPES ausser/except for :
1900 08.85 - 12.92

Spurstangenkopf / Tie-rod End — **10251** — **171 419 812**
Konusmaß [mm] / Cone Size [mm]:14
Innengewinde [mm] / Inner Thread [mm]:M14x1,5
Gewindeart: mit Rechtsgewinde / Thread Type: with right-hand thread
mit Zubehör / With accessories
Gewindemaß / Thread Size:M14x1,5

ALL TYPES ausser/except for :
1900 08.85 - 12.92

Axialgelenk, Spurstange / Axial Rod, tie rod — **10272** — **251 419 807 A**
Gewindemaß / Thread Size:M14x1,5
Gewindeart: mit Rechtsgewinde / Thread Type: with right-hand thread
mit Zubehör / With accessories
für OE / for OE 025 390 036 617

ALL TYPES ausser/except for :
1900 08.85 - 12.92

Trag-/Führungsgelenk / Support-/ Steering Link — 48,3 — **10159** — **251 407 187**
mit Zubehör / With accessories
Standardmaß / Standard Size

ALL TYPES ausser/except for :
1900 08.85 - 12.92

Trag-/Führungsgelenk / Support-/ Steering Link — **10162** — **251 407 361**

ALL TYPES ausser/except for :
1900 08.85 - 12.92

Trag-/Führungsgelenk / Support-/ Steering Link — A48,6 — **13784** — **251 407 187 C**
1.Übermaß / 1st Oversize

ALL TYPES ausser/except for :
1900 08.85 - 12.92

VOLKSWAGEN

TRANSPORTER T3 Kasten/Box/Furgón/Van — 05.79 - 07.92

Lagerung, Lenker / Mounting, wishbone ALL TYPES ausser/except for : 1900 08.85 - 12.92 1.9, 61 kW 10.84 - 02.89			**10174** **251 407 077**
Lagerung, Lenker / Mounting, wishbone ALL TYPES ausser/except for : 1900 08.85 - 12.92	I12/A43,5		**10209** **251 407 183**
Stabilisatorlager / Mounting, Stabilizer ALL TYPES ausser/except for : 1900 08.85 - 12.92	I26/A66		**14378** **251 407 175**
Faltenbalgsatz, Lenkung / Bellow Kit, steering system ALL TYPES ausser/except for : 1900 08.85 - 12.92			**30121** **251 419 831 A**
Gelenk, Lenkwelle / Joint, steering shaft Gelenkscheibe / Disc Joint ALL TYPES ausser/except for : 1900 08.85 - 12.92			**14313** **251 419 417 B**
Achskörperlager / Mounting, axle body ALL TYPES ausser/except for : 1900 08.85 - 12.92	I12/A47		**10197** **251 501 131 A**

TRANSPORTER T3 Pritsche,Fahrgestell / Flatbed,Chassis Cab — 05.79 - 07.92

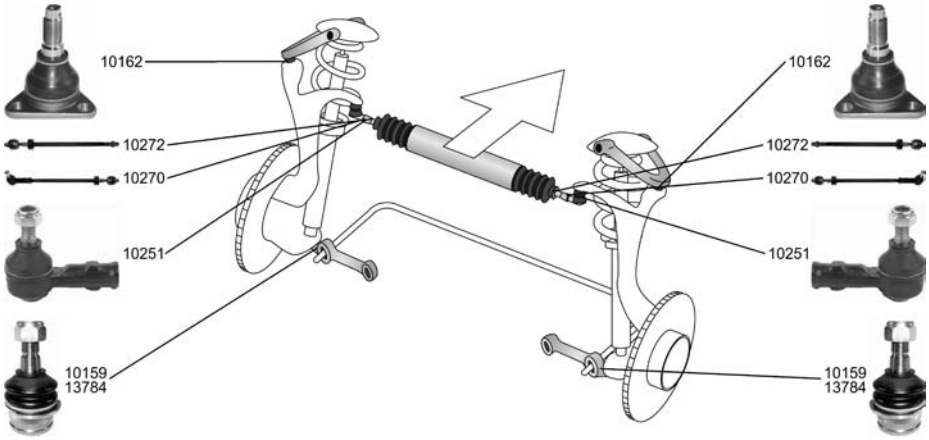

Spurstange / Tie Rod, steering Konusmaß [mm] / Cone Size [mm]:14 Rohr-Ø [mm] / Pipe Ø [mm]:14 ALL TYPES			**10270** **251 419 803**

VOLKSWAGEN

TRANSPORTER T3 05.79 - 07.92
Pritsche,Fahrgestell / Flatbed,Chassis Cab

Spurstangenkopf / Tie-rod End
Konusmaß [mm] / Cone Size [mm]:14
Innengewinde [mm] / Inner Thread [mm]:M14x1,5
Gewindeart: mit Rechtsgewinde / Thread Type: with right-hand thread
mit Zubehör / With accessories
Gewindemaß / Thread Size:M14x1,5
ALL TYPES
10251 **171 419 812**

Axialgelenk, Spurstange / Axial Rod, tie rod
Gewindemaß / Thread Size:M14x1,5
Gewindeart: mit Rechtsgewinde / Thread Type: with right-hand thread
mit Zubehör / With accessories
für OE / for OE 025 390 036 617
ALL TYPES
10272 **251 419 807 A**

Trag-/Führungsgelenk / Support-/ Steering Link
mit Zubehör / With accessories
Standardmaß / Standard Size
48,3
ALL TYPES
10159 **251 407 187**

Trag-/Führungsgelenk / Support-/ Steering Link
ALL TYPES
10162 **251 407 361**

Trag-/Führungsgelenk / Support-/ Steering Link
1.Übermaß / 1st Oversize
A48,6
ALL TYPES
13784 **251 407 187 C**

Lagerung, Lenker / Mounting, wishbone
ALL TYPES ausser/except for :
1.9, 61 kW 10.84 - 02.89
10174 **251 407 077**

Lagerung, Lenker / Mounting, wishbone
I12/A43,5
ALL TYPES
10209 **251 407 183**

Stabilisatorlager / Mounting, Stabilizer
I26/A66
ALL TYPES
14378 **251 407 175**

Faltenbalgsatz, Lenkung / Bellow Kit, steering system
ALL TYPES
30121 **251 419 831 A**

Gelenk, Lenkwelle / Joint, steering shaft
Gelenkscheibe / Disc Joint
ALL TYPES
14313 **251 419 417 B**

VOLKSWAGEN

TRANSPORTER T3 Pritsche,Fahrgestell / Flatbed,Chassis Cab — 05.79 - 07.92

Achskörperlager / Mounting, axle body ALL TYPES		I12/A47	**10197** **251 501 131 A**

TRANSPORTER T4 Bus/Familial (70XB, 70XC, 7DB, 7DW) — 09.90 -

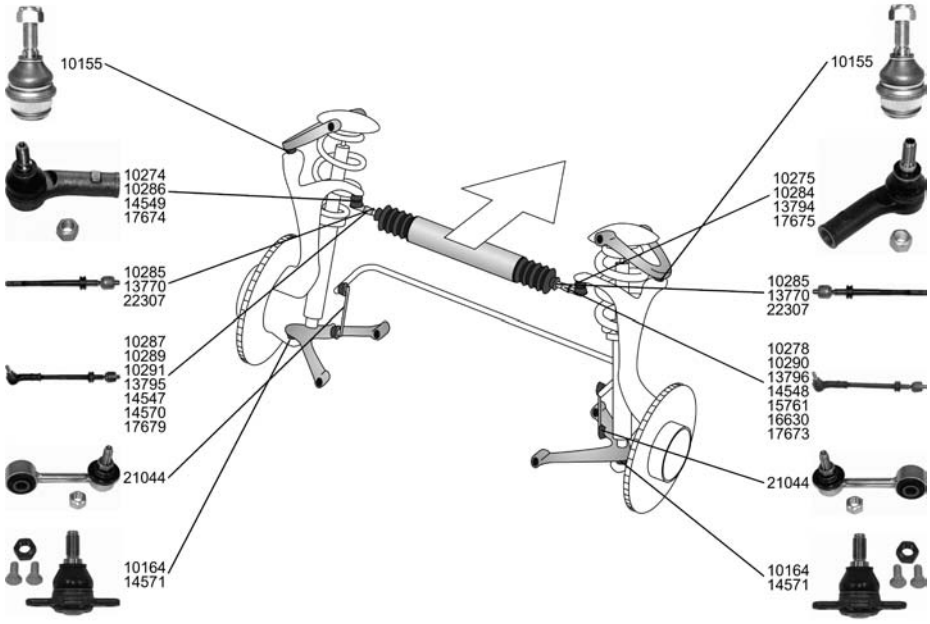

Spurstange / Tie Rod, steering Konusmaß [mm] / Cone Size [mm]:16 Rohr-Ø [mm] / Pipe Ø [mm]:16			**10278** **701 419 804 D**
2.5 Syncro, 81 kW 1.9 TD 2.4 D Syncro	11.92 - 10.92 - 10.92 -	->Chass. 70-S-002 791	
1.8 2.0 2.5, 81 kW 1.9 D 2.4 D, 57 kW	12.90 - 07.92 09.90 - 11.90 - 09.90 - 09.90 -	Chass. 70-M-096 449 - Chass. 70-S-002 791	
Spurstange / Tie Rod, steering Konusmaß [mm] / Cone Size [mm]:16 Rohr-Ø [mm] / Pipe Ø [mm]:16 mit Zubehör / With accessories			**10287** **702 419 803 B**
2.5 Syncro, 81 kW 1.9 TD 2.4 D Syncro	11.92 - 10.92 - 10.92 -	RHD ->Chass. 70-S-002 791 ---------- RHD LHD ->Chass. 70-S-002 791	
1.8 2.0 2.5, 81 kW 1.9 D 2.4 D, 57 kW	12.90 - 07.92 09.90 - 11.90 - 09.90 - 09.90 -	RHD Chass. 70-M-096 449 - Chass. 70-S-002 791 ---------- RHD LHD Chass. 70-M-096 449 - Chass. 70-S-002 791	

VOLKSWAGEN

TRANSPORTER T4 Bus/Familial (70XB, 70XC, 7DB, 7DW) 09.90 -

Spurstange / Tie Rod, steering Konusmaß [mm] / Cone Size [mm]:16 mit Zubehör / With accessories		LHD	**10289** **701 419 803 D**
2.5 Syncro, 81 kW	11.92 -	->Chass. 70-S-002 791	
1.9 TD	10.92 -		
2.4 D Syncro	10.92 -		
1.8	12.90 - 07.92	Chass. 70-M-096 449 - Chass. 70-S-002 791	
2.0	09.90 -		
2.5, 81 kW	11.90 -		
1.9 D	09.90 -		
2.4 D, 57 kW	09.90 -		
Spurstange / Tie Rod, steering Konusmaß [mm] / Cone Size [mm]:14 mit Zubehör / With accessories		LHD	**10290** **701 419 804 C**
1.8	12.90 - 07.92	->Chass. 70-M-096 448	
2.0	09.90 -		
2.5, 81 kW	11.90 -		
1.9 D	09.90 -		
2.4 D, 57 kW	09.90 -		
Spurstange / Tie Rod, steering Konusmaß [mm] / Cone Size [mm]:14		LHD	**10291** **701 419 803 C**
1.8	12.90 - 07.92	->Chass. 70-M-096 448	
2.0	09.90 -		
2.5, 81 kW	11.90 -		
1.9 D	09.90 -		
2.4 D, 57 kW	09.90 -		
Spurstange / Tie Rod, steering Konusmaß [mm] / Cone Size [mm]:14 Rohr-Ø [mm] / Pipe Ø [mm]:16 mit Zubehör / With accessories			**13795** **702 419 803 A**
1.8	12.90 - 07.92	RHD ->Chass. 70-M-096 448 ---------- RHD LHD ->Chass. 70-M-096 448	
2.0	09.90 -		
2.5, 81 kW	11.90 -		
1.9 D	09.90 -		
2.4 D, 57 kW	09.90 -		
Spurstange / Tie Rod, steering Konusmaß [mm] / Cone Size [mm]:16		RHD	**13796** **702 419 804 B**
2.5 Syncro, 81 kW	11.92 -	->Chass. 70-S-002 791	
1.9 TD	10.92 -		
2.4 D Syncro	10.92 -		
1.8	12.90 - 07.92	Chass. 70-M-096 449 - Chass. 70-S-002 791	
2.0	09.90 -		
2.5, 81 kW	11.90 -		
1.9 D	09.90 -		
2.4 D, 57 kW	09.90 -		
Spurstange / Tie Rod, steering Konusmaß [mm] / Cone Size [mm]:18 Rohr-Ø [mm] / Pipe Ø [mm]:16		LHD	**14547** **701 419 803 E**
1.8	12.90 - 07.92	Chass. 70-S-002 792 - Chass. 70-T-199 999	
2.0	09.90 -		
2.5, 81 kW	11.90 -		
2.5 Syncro, 81 kW	11.92 -		
1.9 D	09.90 -		
1.9 TD	10.92 -		
2.4 D, 57 kW	09.90 -		
2.4 D Syncro	10.92 -		
Spurstange / Tie Rod, steering Konusmaß [mm] / Cone Size [mm]:18		LHD	**14548** **701 419 804 E**
1.8	12.90 - 07.92	Chass. 70-S-002 792 - Chass. 70-T-199 999	
2.0	09.90 -		
2.5, 81 kW	11.90 -		
2.5 Syncro, 81 kW	11.92 -		
1.9 D	09.90 -		
1.9 TD	10.92 -		
2.4 D, 57 kW	09.90 -		
2.4 D Syncro	10.92 -		

VOLKSWAGEN

TRANSPORTER T4 Bus/Familial (70XB, 70XC, 7DB, 7DW) 09.90 -

Spurstange / Tie Rod, steering Konusmaß [mm] / Cone Size [mm]:18			**14570** **702 419 803 C**
2.4 D Syncro	10.92 -	RHD Chass. 70-S-002 792 - Chass. 70-T-199 999 ---------- RHD LHD ->Chass. 70-S-002 792 ->Chass. 70-T-199 999	
1.8 2.0 2.5, 81 kW 2.5 Syncro, 81 kW 1.9 D 1.9 TD 2.4 D, 57 kW	12.90 - 07.92 09.90 - 11.90 - 11.92 - 09.90 - 10.92 - 09.90 -	RHD Chass. 70-S-002 792 - Chass. 70-T-199 999 ---------- RHD LHD Chass. 70-S-002 792 - Chass. 70-T-199 999	
Spurstange / Tie Rod, steering Konusmaß [mm] / Cone Size [mm]:14		▲RHD	**15761** **702 419 804 A**
1.8 2.0 2.5, 81 kW 1.9 D 2.4 D, 57 kW	12.90 - 07.92 09.90 - 11.90 - 09.90 - 09.90 -	->Chass. 70-M-096 448	
Spurstange / Tie Rod, steering Konusmaß [mm] / Cone Size [mm]:18			**16630** **702 419 804 C**
2.4 D Syncro	10.92 -	RHD Chass. 70-S-002 792 - Chass. 70-T-199 999 ---------- RHD LHD ->Chass. 70-S-002 792 ->Chass. 70-T-199 999	
1.8 2.0 2.5, 81 kW 2.5 Syncro, 81 kW 1.9 D 1.9 TD 2.4 D, 57 kW	12.90 - 07.92 09.90 - 11.90 - 11.92 - 09.90 - 10.92 - 09.90 -	RHD Chass. 70-S-002 792 - Chass. 70-T-199 999 ---------- RHD LHD Chass. 70-S-002 792 - Chass. 70-T-199 999	
Spurstange / Tie Rod, steering Konusmaß [mm] / Cone Size [mm]:18 mit Zubehör / With accessories			**17673** **701 419 804 F**
1.8 2.0 2.5, 81 kW 2.5 Syncro, 81 kW 1.9 D 1.9 TD 2.4 D, 57 kW 2.4 D Syncro 2.5 TDI, 75 kW	12.90 - 07.92 09.90 - 11.90 - 11.92 - 09.90 - 10.92 - 09.90 - 10.92 - 09.95 -	Chass. 70-T-200 000->	
2.5, 85 kW 2.5 Syncro, 85 kW 2.8 VR 6 2.8 V6 2.4 D, 55 kW 2.5 TDI, 65 kW 2.5 TDI Syncro 2.5 TDI, 111 kW	08.96 - 07.96 - 11.95 - 04.00 04.00 - 08.97 - 05.98 - 01.96 - 05.98 -		

VOLKSWAGEN

TRANSPORTER T4 Bus/Familial (70XB, 70XC, 7DB, 7DW) 09.90 -

Spurstange / Tie Rod, steering Konusmaß [mm] / Cone Size [mm]:18 Rohr-Ø [mm] / Pipe Ø [mm]:16,5 mit Zubehör / With accessories			**17679** **702 419 803 D**
1.8	12.90 - 07.92	Chass. 70-T-200 000->	
2.0	09.90 -		
2.5, 81 kW	11.90 -		
2.5 Syncro, 81 kW	11.92 -		
1.9 D	09.90 -		
1.9 TD	10.92 -		
2.4 D, 57 kW	09.90 -		
2.4 D Syncro	10.92 -		
2.5 TDI, 75 kW	09.95 -		
2.5, 85 kW	08.96 -		
2.5 Syncro, 85 kW	07.96 -		
2.8 VR 6	11.95 - 04.00		
2.8 V6	04.00 -		
2.4 D, 55 kW	08.97 -		
2.5 TDI, 65 kW	05.98 -		
2.5 TDI Syncro	01.96 -		
2.5 TDI, 111 kW	05.98 -		
Spurstangenkopf / Tie-rod End			**10274** **701 419 811 B**
2.5 Syncro, 81 kW	11.92 -	->Chass. 70-S-002 791	
1.9 TD	10.92 -		
2.4 D Syncro	10.92 -		
1.8	12.90 - 07.92	Chass. 70-M-096 449 - Chass. 70-S-002 791	
2.0	09.90 -		
2.5, 81 kW	11.90 -		
1.9 D	09.90 -		
2.4 D, 57 kW	09.90 -		
Spurstangenkopf / Tie-rod End Konusmaß [mm] / Cone Size [mm]:18 Gewindeart: mit Rechtsgewinde / Thread Type: with right-hand thread			**10275** **701 419 812 B**
1.8	12.90 - 07.92	Chass. 70-S-002 792 - Chass. 70-T-199 999	
2.0	09.90 -		
2.5, 81 kW	11.90 -		
2.5 Syncro, 81 kW	11.92 -		
1.9 D	09.90 -		
1.9 TD	10.92 -		
2.4 D, 57 kW	09.90 -		
2.4 D Syncro	10.92 -		
Spurstangenkopf / Tie-rod End Konusmaß [mm] / Cone Size [mm]:14 Gewindeart: mit Rechtsgewinde / Thread Type: with right-hand thread			**10284** **701 419 812**
1.8	12.90 - 07.92	->Chass. 70-M-096 448	
2.0	09.90 -		
2.5, 81 kW	11.90 -		
1.9 D	09.90 -		
2.4 D, 57 kW	09.90 -		
Spurstangenkopf / Tie-rod End Konusmaß [mm] / Cone Size [mm]:14 Gewindeart: mit Rechtsgewinde / Thread Type: with right-hand thread			**10286** **701 419 811 A**
1.8	12.90 - 07.92	->Chass. 70-M-096 448	
2.0	09.90 -		
2.5, 81 kW	11.90 -		
1.9 D	09.90 -		
2.4 D, 57 kW	09.90 -		
Spurstangenkopf / Tie-rod End			**13794** **701 419 812 A**
2.5 Syncro, 81 kW	11.92 -	->Chass. 70-S-002 791	
1.9 TD	10.92 -		
2.4 D Syncro	10.92 -		
1.8	12.90 - 07.92	Chass. 70-M-096 449 - Chass. 70-S-002 791	
2.0	09.90 -		
2.5, 81 kW	11.90 -		
1.9 D	09.90 -		
2.4 D, 57 kW	09.90 -		

VOLKSWAGEN

TRANSPORTER T4 Bus/Familial (70XB, 70XC, 7DB, 7DW) 09.90 -

Spurstangenkopf / Tie-rod End
Konusmaß [mm] / Cone Size [mm]:18
Gewindeart: mit Rechtsgewinde / Thread Type: with right-hand thread

14549 **701 419 811 C**

1.8	12.90 - 07.92	Chass. 70-S-002 792 - Chass. 70-T-199 999
2.0	09.90 -	
2.5, 81 kW	11.90 -	
2.5 Syncro, 81 kW	11.92 -	
1.9 D	09.90 -	
1.9 TD	10.92 -	
2.4 D, 57 kW	09.90 -	
2.4 D Syncro	10.92 -	

Spurstangenkopf / Tie-rod End
Konusmaß [mm] / Cone Size [mm]:18
Gewindeart: mit Rechtsgewinde / Thread Type: with right-hand thread
mit Zubehör / With accessories

17674 **701 419 811 E**

1.8	12.90 - 07.92	Chass. 70-T-200 000->
2.0	09.90 -	
2.5, 81 kW	11.90 -	
2.5 Syncro, 81 kW	11.92 -	
1.9 D	09.90 -	
1.9 TD	10.92 -	
2.4 D, 57 kW	09.90 -	
2.4 D Syncro	10.92 -	
2.5 TDI, 75 kW	09.95 -	
2.5, 85 kW	08.96 -	
2.5 Syncro, 85 kW	07.96 -	
2.8 VR 6	11.95 - 04.00	
2.8 V6	04.00 -	
2.4 D, 55 kW	08.97 -	
2.5 TDI, 65 kW	05.98 -	
2.5 TDI Syncro	01.96 -	
2.5 TDI, 111 kW	05.98 -	

Spurstangenkopf / Tie-rod End
Konusmaß [mm] / Cone Size [mm]:18
Gewindeart: mit Rechtsgewinde / Thread Type: with right-hand thread
mit Zubehör / With accessories

17675 **701 419 812 D**

1.8	12.90 - 07.92	Chass. 70-T-200 000->
2.0	09.90 -	
2.5, 81 kW	11.90 -	
2.5 Syncro, 81 kW	11.92 -	
1.9 D	09.90 -	
1.9 TD	10.92 -	
2.4 D, 57 kW	09.90 -	
2.4 D Syncro	10.92 -	
2.5 TDI, 75 kW	09.95 -	
2.5, 85 kW	08.96 -	
2.5 Syncro, 85 kW	07.96 -	
2.8 VR 6	11.95 - 04.00	
2.8 V6	04.00 -	
2.4 D, 55 kW	08.97 -	
2.5 TDI, 65 kW	05.98 -	
2.5 TDI Syncro	01.96 -	
2.5 TDI, 111 kW	05.98 -	

Axialgelenk, Spurstange / Axial Rod, tie rod
Gewindemaß / Thread Size:M14x1,5
Gewindeart: mit Rechtsgewinde / Thread Type: with right-hand thread
für OE / for OE 025 390 091/092 617

10285 **701 419 810 A**

2.0	09.90 -	->Chass. 70-T-199 999
2.5, 81 kW	11.90 -	
1.9 D	09.90 -	
1.9 TD	10.92 -	
2.4 D, 57 kW	09.90 -	
2.4 D Syncro	10.92 -	
2.5 TDI, 75 kW	09.95 -	
2.5 Syncro, 81 kW	11.92 -	
1.8	12.90 - 07.92	
2.5 Syncro, 85 kW	07.96 -	
2.8 VR 6	11.95 - 04.00	
2.8 V6	04.00 -	
2.5 TDI, 65 kW	05.98 -	

VOLKSWAGEN

TRANSPORTER T4 Bus/Familial (70XB, 70XC, 7DB, 7DW) 09.90 -

Axialgelenk, Spurstange / Axial Rod, tie rod Gewindeart: mit Rechtsgewinde / Thread Type: with right-hand thread für OE / for OE 025 390 090/093 617			**13770** **701 419 810**
2.0	09.90 -	->Chass. 70-T-199 999	
2.5, 81 kW	11.90 -		
1.9 D	09.90 -		
1.9 TD	10.92 -		
2.4 D, 57 kW	09.90 -		
2.4 D Syncro	10.92 -		
1.8	12.90 - 07.92		
Axialgelenk, Spurstange / Axial Rod, tie rod für OE / for OE 025 390 123 617 LH			**22307** **701 419 804 F** **701 419 810 B** **702 419 803 D**
1.9 TD	10.92 -	Chass. 70-T-200 000->	
2.4 D Syncro	10.92 -		
2.5 TDI, 75 kW	09.95 -		
2.0	09.90 -	Chass. 70-T-200 000->	
2.5, 81 kW	11.90 -		
2.5 Syncro, 85 kW	07.96 -		
2.8 VR 6	11.95 - 04.00		
2.8 V6	04.00 -		
1.9 D	09.90 -		
2.4 D, 57 kW	09.90 -		
2.5 TDI, 65 kW	05.98 -		
2.5, 85 kW	08.96 -		
2.4 D, 55 kW	08.97 -		
2.5 TDI Syncro	01.96 -		
2.5 TDI, 111 kW	05.98 -		
Trag-/Führungsgelenk / Support-/ Steering Link			**10155** **701 407 187 B**
ALL TYPES ausser/except for :			
2.5 TDI, 75 kW	09.00 -		
2.5 TDI, 111 kW	09.00 -		
Trag-/Führungsgelenk / Support-/ Steering Link Lochabstand 1/Lochabstand 2 / Hole Pitch 1/ Hole Pitch 2:80 mit Zubehör / With accessories			**10164** **701 407 361 B**
1.8	12.90 - 07.92	->Chass. 70-T-199 999	
2.0	09.90 -		
2.5, 81 kW	11.90 -		
2.5 Syncro, 81 kW	11.92 -		
1.9 D	09.90 -		
1.9 TD	10.92 -		
2.4 D, 57 kW	09.90 -		
2.4 D Syncro	10.92 -		
Trag-/Führungsgelenk / Support-/ Steering Link Lochabstand 1/Lochabstand 2 / Hole Pitch 1/ Hole Pitch 2:80			**14571** **7D0 407 361**
1.8	12.90 - 07.92	Chass. 70-T-2-000 001->	
2.0	09.90 -		
2.5, 81 kW	11.90 -		
2.8 VR 6	11.95 - 04.00		
1.9 D	09.90 -		
1.9 TD	10.92 -		
2.4 D, 57 kW	09.90 -		
2.4 D Syncro	10.92 -		
2.5 TDI, 75 kW	09.95 -		
2.5, 85 kW	08.96 -		
2.5 Syncro, 85 kW	07.96 -		
2.4 D, 55 kW	08.97 -		
2.5 TDI, 65 kW	05.98 -		
2.5 TDI Syncro	01.96 -		
2.5 TDI, 111 kW	05.98 -		
2.8 V6	04.00 -		
Lagerung, Lenker / Mounting, wishbone		I12/A35	**14554** **701 407 087**
ALL TYPES ausser/except for :			
2.5 TDI, 75 kW	09.00 -		
2.5 TDI, 111 kW	09.00 -		

VOLKSWAGEN

TRANSPORTER T4 Bus/Familial (70XB, 70XC, 7DB, 7DW) 09.90 -

Lagerung, Lenker / Mounting, wishbone			**14555** **7D0 407 140 A**
2.5 Syncro	11.92 - .		
2.5, 85 kW	08.96 -		
2.8 VR 6	11.95 - 04.00		
2.8 V6	04.00 -		
1.9 TD	10.92 -		
2.4 D, 55 kW	08.97 -		
2.4 D Syncro	10.92 -		
2.5 TDI, 65 kW	05.98 -		
2.5 TDI, 75 kW	09.95 -		
2.5 TDI Syncro	01.96 -		
2.5 TDI, 111 kW	05.98 -		
1.8	12.90 - 07.92	Chass. 70-M-083 343->	
2.0	09.90 -		
2.5, 81 kW	11.90 -		
2.4 D, 57 kW	09.90 -		
1.9 D	09.90 -	->Chass. 70-M-083 342	
Lagerung, Lenker / Mounting, wishbone		I14/A35	**14556** **701 407 183**
1.8	12.90 - 07.92	->Chass. 70-T-199 999	
2.0	09.90 -		
2.5, 81 kW	11.90 -		
2.5 Syncro, 81 kW	11.92 -		
1.9 D	09.90 -		
1.9 TD	10.92 -		
2.4 D, 57 kW	09.90 -		
2.4 D Syncro	10.92 -		
Lagerung, Lenker / Mounting, wishbone		I40/A60	**17681** **7D0 407 183**
1.8	12.90 - 07.92	Chass. 70-T-200 000->	
2.0	09.90 -		
2.5, 81 kW	11.90 -		
2.5 Syncro, 81 kW	11.92 -		
1.9 D	09.90 -		
1.9 TD	10.92 -		
2.4 D, 57 kW	09.90 -		
2.4 D Syncro	10.92 -		
2.5 TDI, 75 kW	09.95 -		
2.5, 85 kW	08.96 -		
2.5 Syncro, 85 kW	07.96 -		
2.8 VR 6	11.95 - 04.00		
2.8 V6	04.00 -		
2.4 D, 55 kW	08.97 -		
2.5 TDI, 65 kW	05.98 -		
2.5 TDI Syncro	01.96 -		
2.5 TDI, 111 kW	05.98 -		
Lagerung, Lenker / Mounting, wishbone		I12/A39	**25931** **701 407 077 A**
ALL TYPES ausser/except for :			
2.5 TDI, 75 kW	09.00 -		
2.5 TDI, 111 kW	09.00 -		
Stange/Strebe, Stabilisator / Rod/Strut, stabiliser Pendelstange / Suspension Rod Gewindemaß / Thread Size:M12x1,5 Durchmesser Stabilisator [mm] / Stabilizer Diameter [mm]:27			**21044** **701 411 049 B**
ALL TYPES ausser/except for :			
2.5 TDI, 75 kW	09.00 -		
2.5 TDI, 111 kW	09.00 -		
Stabilisatorlager / Mounting, Stabilizer			**17682** **7D0 411 045**
ALL TYPES ausser/except for :			
2.5 TDI, 75 kW	09.00 -		
2.5 TDI, 111 kW	09.00 -		
Stabilisatorlager / Mounting, Stabilizer			**19129** **701 411 041**
1.8	12.90 - 07.92	->Chass. 70-T-199 999	
2.0	09.90 -		
2.5, 81 kW	11.90 -		
2.5 Syncro, 81 kW	11.92 -		
1.9 D	09.90 -		
1.9 TD	10.92 -		
2.4 D, 57 kW	09.90 -		
2.4 D Syncro	10.92 -		

VOLKSWAGEN

TRANSPORTER T4 Bus/Familial (70XB, 70XC, 7DB, 7DW) 09.90 -

Faltenbalgsatz, Lenkung / Bellow Kit, steering system			**30127** **7D0 419 831**
ALL TYPES ausser/except for :			
2.5 TDI, 75 kW	09.00 -		
2.5 TDI, 111 kW	09.00 -		

Achsträgerlager / Mounting, axle bracket			**26572** **701 599 381**
2.5 Syncro	11.92 - .		
2.4 D Syncro	10.92 -		
2.5 TDI Syncro	01.96 -		

TRANSPORTER T4 Kasten/Box/Furgón/Van (70XA) 07.90 -

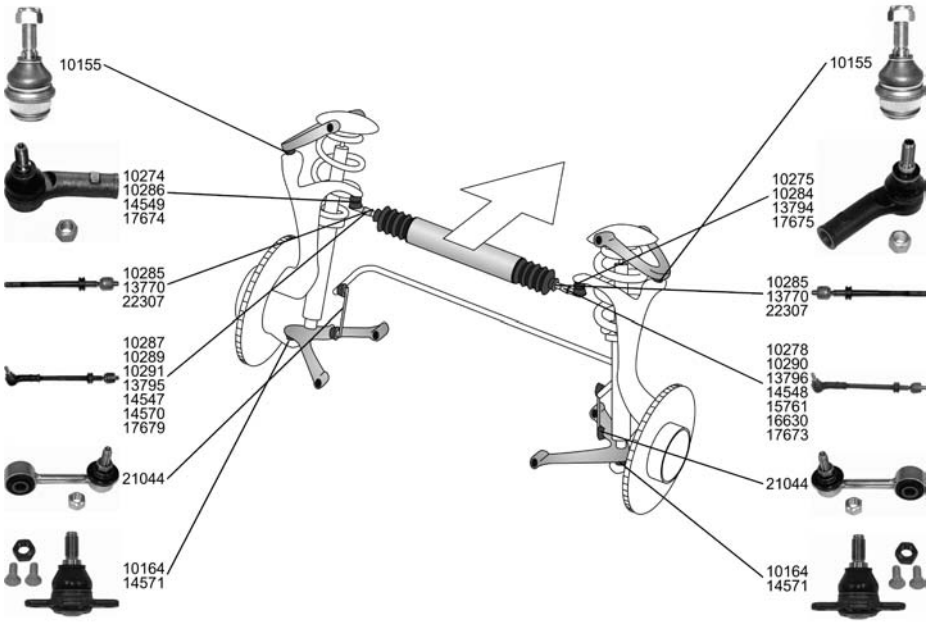

Spurstange / Tie Rod, steering Konusmaß [mm] / Cone Size [mm]:16 Rohr-Ø [mm] / Pipe Ø [mm]:16			**10278** **701 419 804 D**
2.0	07.90 -	Chass. 70-M-096 449 - Chass. 70-S-002 791	
2.5, 81 kW	11.90 -		
1.9 D	07.90 -		
2.4 D, 57 kW	07.90 -		
2.5 Syncro, 81 kW	10.92 -	->Chass. 70-S-002 791	
1.9 TD	10.92 -		
2.4 D Syncro	10.92 -		

VOLKSWAGEN

TRANSPORTER T4 07.90 -
Kasten/Box/Furgón/Van (70XA)

Spurstange / Tie Rod, steering Konusmaß [mm] / Cone Size [mm]:16 Rohr-Ø [mm] / Pipe Ø [mm]:16 mit Zubehör / With accessories			**10287** **702 419 803 B**
2.0 2.5, 81 kW 1.9 D 2.4 D, 57 kW	07.90 - 11.90 - 07.90 - 07.90 -	RHD Chass. 70-M-096 449 - Chass. 70-S-002 791 ---------- RHD LHD Chass. 70-M-096 449 - Chass. 70-S-002 791	
2.5 Syncro, 81 kW 1.9 TD 2.4 D Syncro	10.92 - 10.92 - 10.92 -	RHD ->Chass. 70-S-002 791 ---------- RHD LHD ->Chass. 70-S-002 791	
Spurstange / Tie Rod, steering Konusmaß [mm] / Cone Size [mm]:16 mit Zubehör / With accessories		LHD	**10289** **701 419 803 D**
2.0 2.5, 81 kW 1.9 D 2.4 D, 57 kW	07.90 - 11.90 - 07.90 - 07.90 -	Chass. 70-M-096 449 - Chass. 70-S-002 791	
2.5 Syncro, 81 kW 1.9 TD 2.4 D Syncro	10.92 - 10.92 - 10.92 -	->Chass. 70-S-002 791	
Spurstange / Tie Rod, steering Konusmaß [mm] / Cone Size [mm]:14 mit Zubehör / With accessories		LHD	**10290** **701 419 804 C**
2.0 2.5, 81 kW 1.9 D 2.4 D, 57 kW	07.90 - 11.90 - 07.90 - 07.90 -	->Chass. 70-M-096 448	
Spurstange / Tie Rod, steering Konusmaß [mm] / Cone Size [mm]:14		LHD	**10291** **701 419 803 C**
2.0 2.5, 81 kW 1.9 D 2.4 D, 57 kW	07.90 - 11.90 - 07.90 - 07.90 -	->Chass. 70-M-096 448	
Spurstange / Tie Rod, steering Konusmaß [mm] / Cone Size [mm]:14 Rohr-Ø [mm] / Pipe Ø [mm]:16 mit Zubehör / With accessories			**13795** **702 419 803 A**
2.0 2.5, 81 kW 1.9 D 2.4 D, 57 kW	07.90 - 11.90 - 07.90 - 07.90 -	RHD ->Chass. 70-M-096 448 ---------- RHD LHD ->Chass. 70-M-096 448	
Spurstange / Tie Rod, steering Konusmaß [mm] / Cone Size [mm]:16		RHD	**13796** **702 419 804 B**
2.0 2.5, 81 kW 1.9 D 2.4 D, 57 kW	07.90 - 11.90 - 07.90 - 07.90 -	Chass. 70-M-096 449 - Chass. 70-S-002 791	
2.5 Syncro, 81 kW 1.9 TD 2.4 D Syncro	10.92 - 10.92 - 10.92 -	->Chass. 70-S-002 791	
Spurstange / Tie Rod, steering Konusmaß [mm] / Cone Size [mm]:18 Rohr-Ø [mm] / Pipe Ø [mm]:16		LHD	**14547** **701 419 803 E**
2.0 2.5, 81 kW 2.5 Syncro, 81 kW 1.9 D 1.9 TD 2.4 D, 57 kW 2.4 D Syncro	07.90 - 11.90 - 10.92 - 07.90 - 10.92 - 07.90 - 10.92 -	Chass. 70-S-002 792 - Chass. 70-T-199 999	

VOLKSWAGEN

TRANSPORTER T4 07.90 -
Kasten/Box/Furgón/Van (70XA)

Spurstange / Tie Rod, steering Konusmaß [mm] / Cone Size [mm]:18		LHD	**14548** **701 419 804 E**
2.0	07.90 -	Chass. 70-S-002 792 - Chass. 70-T-199 999	
2.5, 81 kW	11.90 -		
2.5 Syncro, 81 kW	10.92 -		
1.9 D	07.90 -		
1.9 TD	10.92 -		
2.4 D, 57 kW	07.90 -		
2.4 D Syncro	10.92 -		
Spurstange / Tie Rod, steering Konusmaß [mm] / Cone Size [mm]:18			**14570** **702 419 803 C**
2.0	07.90 -	RHD Chass. 70-S-002 792 - Chass. 70-T-199 999 ---------- RHD LHD Chass. 70-S-002 792 - Chass. 70-T-199 999	
2.5, 81 kW	11.90 -		
2.5 Syncro, 81 kW	10.92 -		
1.9 D	07.90 -		
1.9 TD	10.92 -		
2.4 D, 57 kW	07.90 -		
2.4 D Syncro	10.92 -		
Spurstange / Tie Rod, steering Konusmaß [mm] / Cone Size [mm]:14		RHD	**15761** **702 419 804 A**
2.0	07.90 -	->Chass. 70-M-096 448	
2.5, 81 kW	11.90 -		
1.9 D	07.90 -		
2.4 D, 57 kW	07.90 -		
Spurstange / Tie Rod, steering Konusmaß [mm] / Cone Size [mm]:18			**16630** **702 419 804 C**
2.0	07.90 -	RHD Chass. 70-S-002 792 - Chass. 70-T-199 999 ---------- RHD LHD Chass. 70-S-002 792 - Chass. 70-T-199 999	
2.5, 81 kW	11.90 -		
2.5 Syncro, 81 kW	10.92 -		
1.9 D	07.90 -		
1.9 TD	10.92 -		
2.4 D, 57 kW	07.90 -		
2.4 D Syncro	10.92 -		
Spurstange / Tie Rod, steering Konusmaß [mm] / Cone Size [mm]:18 mit Zubehör / With accessories			**17673** **701 419 804 F**
2.0	07.90 -	Chass. 70-T-200 000->	
2.5, 81 kW	11.90 -		
2.5 Syncro, 81 kW	10.92 -		
1.9 D	07.90 -		
1.9 TD	10.92 -		
2.4 D, 57 kW	07.90 -		
2.4 D Syncro	10.92 -		
2.5 TDI, 75 kW	09.95 -		
2.5 TDI Syncro	09.95 -		
2.5, 85 kW	08.96 -		
2.5 Syncro, 85 kW	08.96 -		
2.4 D, 55 kW	08.97 -		
2.5 TDI, 65 kW	12.98 -		
2.5 TDI, 111 kW	09.00 -		
Spurstange / Tie Rod, steering Konusmaß [mm] / Cone Size [mm]:18 Rohr-Ø [mm] / Pipe Ø [mm]:16,5 mit Zubehör / With accessories			**17679** **702 419 803 D**
2.0	07.90 -	Chass. 70-T-200 000->	
2.5, 81 kW	11.90 -		
2.5 Syncro, 81 kW	10.92 -		
1.9 D	07.90 -		
1.9 TD	10.92 -		
2.4 D, 57 kW	07.90 -		
2.4 D Syncro	10.92 -		
2.5 TDI, 75 kW	09.95 -		
2.5 TDI Syncro	09.95 -		
2.5, 85 kW	08.96 -		
2.5 Syncro, 85 kW	08.96 -		
2.4 D, 55 kW	08.97 -		
2.5 TDI, 65 kW	12.98 -		
2.5 TDI, 111 kW	09.00 -		

VOLKSWAGEN

TRANSPORTER T4 07.90 -
Kasten/Box/Furgón/Van (70XA)

Spurstangenkopf / Tie-rod End			**10274** **701 419 811 B**
2.0	07.90 -	Chass. 70-M-096 449 - Chass. 70-S-002 791	
2.5, 81 kW	11.90 -		
1.9 D	07.90 -		
2.4 D, 57 kW	07.90 -		
2.5 Syncro, 81 kW	10.92 -	->Chass. 70-S-002 791	
1.9 TD	10.92 -		
2.4 D Syncro	10.92 -		
Spurstangenkopf / Tie-rod End Konusmaß [mm] / Cone Size [mm]:18 Gewindeart: mit Rechtsgewinde / Thread Type: with right-hand thread			**10275** **701 419 812 B**
2.0	07.90 -	Chass. 70-S-002 792 - Chass. 70-T-199 999	
2.5, 81 kW	11.90 -		
2.5 Syncro, 81 kW	10.92 -		
1.9 D	07.90 -		
1.9 TD	10.92 -		
2.4 D, 57 kW	07.90 -		
2.4 D Syncro	10.92 -		
Spurstangenkopf / Tie-rod End Konusmaß [mm] / Cone Size [mm]:14 Gewindeart: mit Rechtsgewinde / Thread Type: with right-hand thread			**10284** **701 419 812**
2.0	07.90 -	->Chass. 70-M-096 448	
2.5, 81 kW	11.90 -		
1.9 D	07.90 -		
2.4 D, 57 kW	07.90 -		
Spurstangenkopf / Tie-rod End Konusmaß [mm] / Cone Size [mm]:14 Gewindeart: mit Rechtsgewinde / Thread Type: with right-hand thread			**10286** **701 419 811 A**
2.0	07.90 -	->Chass. 70-M-096 448	
2.5, 81 kW	11.90 -		
1.9 D	07.90 -		
2.4 D, 57 kW	07.90 -		
Spurstangenkopf / Tie-rod End			**13794** **701 419 812 A**
2.0	07.90 -	Chass. 70-M-096 449 - Chass. 70-S-002 791	
2.5, 81 kW	11.90 -		
1.9 D	07.90 -		
2.4 D, 57 kW	07.90 -		
2.5 Syncro, 81 kW	10.92 -	->Chass. 70-S-002 791	
1.9 TD	10.92 -		
2.4 D Syncro	10.92 -		
Spurstangenkopf / Tie-rod End Konusmaß [mm] / Cone Size [mm]:18 Gewindeart: mit Rechtsgewinde / Thread Type: with right-hand thread			**14549** **701 419 811 C**
2.0	07.90 -	Chass. 70-S-002 792 - Chass. 70-T-199 999	
2.5, 81 kW	11.90 -		
2.5 Syncro, 81 kW	10.92 -		
1.9 D	07.90 -		
1.9 TD	10.92 -		
2.4 D, 57 kW	07.90 -		
2.4 D Syncro	10.92 -		
Spurstangenkopf / Tie-rod End Konusmaß [mm] / Cone Size [mm]:18 Gewindeart: mit Rechtsgewinde / Thread Type: with right-hand thread mit Zubehör / With accessories			**17674** **701 419 811 E**
2.0	07.90 -	Chass. 70-T-200 000->	
2.5, 81 kW	11.90 -		
2.5 Syncro, 81 kW	10.92 -		
1.9 D	07.90 -		
1.9 TD	10.92 -		
2.4 D, 57 kW	07.90 -		
2.4 D Syncro	10.92 -		
2.5 TDI, 75 kW	09.95 -		
2.5 TDI Syncro	09.95 -		
2.5, 85 kW	08.96 -		
2.5 Syncro, 85 kW	08.96 -		
2.4 D, 55 kW	08.97 -		
2.5 TDI, 65 kW	12.98 -		
2.5 TDI, 111 kW	09.00 -		

VOLKSWAGEN

TRANSPORTER T4 07.90 -
Kasten/Box/Furgón/Van (70XA)

Spurstangenkopf / Tie-rod End
Konusmaß [mm] / Cone Size [mm]:18
Gewindeart: mit Rechtsgewinde / Thread Type: with right-hand thread
mit Zubehör / With accessories

17675 **701 419 812 D**

2.0	07.90 -	Chass. 70-T-200 000->
2.5, 81 kW	11.90 -	
2.5 Syncro, 81 kW	10.92 -	
1.9 D	07.90 -	
1.9 TD	10.92 -	
2.4 D, 57 kW	07.90 -	
2.4 D Syncro	10.92 -	
2.5 TDI, 75 kW	09.95 -	
2.5 TDI Syncro	09.95 -	
2.5, 85 kW	08.96 -	
2.5 Syncro, 85 kW	08.96 -	
2.4 D, 55 kW	08.97 -	
2.5 TDI, 65 kW	12.98 -	
2.5 TDI, 111 kW	09.00 -	

Axialgelenk, Spurstange / Axial Rod, tie rod
Gewindemaß / Thread Size:M14x1,5
Gewindeart: mit Rechtsgewinde / Thread Type: with right-hand thread
für OE / for OE 025 390 091/092 617

10285 **701 419 810 A**

2.0	07.90 -	->Chass. 70-T-199 999
2.5, 81 kW	11.90 -	
2.5 Syncro, 81 kW	10.92 -	
1.9 D	07.90 -	
1.9 TD	10.92 -	
2.4 D, 57 kW	07.90 -	
2.4 D Syncro	10.92 -	
2.5 TDI Syncro	09.95 -	
2.5 Syncro, 85 kW	08.96 -	
2.5 TDI, 65 kW	12.98 -	
2.5 TDI, 75 kW	09.95 -	

Axialgelenk, Spurstange / Axial Rod, tie rod
Gewindeart: mit Rechtsgewinde / Thread Type: with right-hand thread
für OE / for OE 025 390 090/093 617

13770 **701 419 810**

2.0	07.90 -	->Chass. 70-T-199 999
2.5, 81 kW	11.90 -	
2.5 Syncro, 81 kW	10.92 -	
1.9 D	07.90 -	
1.9 TD	10.92 -	
2.4 D, 57 kW	07.90 -	
2.4 D Syncro	10.92 -	

Axialgelenk, Spurstange / Axial Rod, tie rod
für OE / for OE 025 390 123 617 LH

22307 **701 419 804 F**
701 419 810 B
702 419 803 D

2.0	07.90 -	Chass. 70-T-200 000->
2.5, 81 kW	11.90 -	
2.5 Syncro, 85 kW	08.96 -	
1.9 D	07.90 -	
2.4 D, 57 kW	07.90 -	
2.5 TDI, 65 kW	12.98 -	
2.5 TDI, 75 kW	09.95 -	
2.5 Syncro, 81 kW	10.92 -	Chass. 70-T-200 000->
1.9 TD	10.92 -	
2.4 D Syncro	10.92 -	
2.5 TDI Syncro	09.95 -	
2.5, 85 kW	08.96 -	
2.4 D, 55 kW	08.97 -	

Trag-/Führungsgelenk / Support-/ Steering Link

10155 **701 407 187 B**

ALL TYPES ausser/except for :		
2.5 TDI, 75 kW	09.00 -	
2.5 TDI, 111 kW	09.00 -	

VOLKSWAGEN

TRANSPORTER T4 07.90 -
Kasten/Box/Furgón/Van (70XA)

Trag-/Führungsgelenk / Support-/ Steering Link Lochabstand 1/Lochabstand 2 / Hole Pitch 1/ Hole Pitch 2:80 mit Zubehör / With accessories			**10164** **701 407 361 B**
2.0	07.90 -	->Chass. 70-T-199 999	
2.5, 81 kW	11.90 -		
2.5 Syncro, 81 kW	10.92 -		
1.9 D	07.90 -		
1.9 TD	10.92 -		
2.4 D, 57 kW	07.90 -		
2.4 D Syncro	10.92 -		
Trag-/Führungsgelenk / Support-/ Steering Link Lochabstand 1/Lochabstand 2 / Hole Pitch 1/ Hole Pitch 2:80			**14571** **7D0 407 361**
2.0	07.90 -	Chass. 70-T-2-000 001->	
2.5, 81 kW	11.90 -		
2.5 Syncro, 81 kW	10.92 -		
1.9 D	07.90 -		
1.9 TD	10.92 -		
2.4 D, 57 kW	07.90 -		
2.4 D Syncro	10.92 -		
2.5 TDI, 75 kW	09.95 -		
2.5 TDI Syncro	09.95 -		
2.5, 85 kW	08.96 -		
2.5 Syncro, 85 kW	08.96 -		
2.4 D, 55 kW	08.97 -		
2.5 TDI, 65 kW	12.98 -		
Lagerung, Lenker / Mounting, wishbone		I12/A35	**14554** **701 407 087**
ALL TYPES ausser/except for :			
2.5 TDI, 75 kW	09.00 -		
2.5 TDI, 111 kW	09.00 -		
Lagerung, Lenker / Mounting, wishbone			**14555** **7D0 407 140 A**
2.0	07.90 -	Chass. 70-M-083 343->	
2.5, 81 kW	11.90 -		
1.9 D	07.90 -		
2.4 D, 57 kW	07.90 -		
2.5 Syncro	10.92 - .		
2.5, 85 kW	08.96 -		
1.9 TD	10.92 -		
2.4 D, 55 kW	08.97 -		
2.4 D Syncro	10.92 -		
2.5 TDI, 65 kW	12.98 -		
2.5 TDI, 75 kW	09.95 -		
2.5 TDI Syncro	09.95 -		
2.5 TDI, 111 kW	09.00 -		
Lagerung, Lenker / Mounting, wishbone		I14/A35	**14556** **701 407 183**
2.0	07.90 -	->Chass. 70-T-199 999	
2.5, 81 kW	11.90 -		
2.5 Syncro, 81 kW	10.92 -		
1.9 D	07.90 -		
1.9 TD	10.92 -		
2.4 D, 57 kW	07.90 -		
2.4 D Syncro	10.92 -		
Lagerung, Lenker / Mounting, wishbone		I40/A60	**17681** **7D0 407 183**
2.0	07.90 -	Chass. 70-T-200 000->	
2.5, 81 kW	11.90 -		
2.5 Syncro, 81 kW	10.92 -		
1.9 D	07.90 -		
1.9 TD	10.92 -		
2.4 D, 57 kW	07.90 -		
2.4 D Syncro	10.92 -		
2.5 TDI, 75 kW	09.95 -		
2.5 TDI Syncro	09.95 -		
2.5, 85 kW	08.96 -		
2.5 Syncro, 85 kW	08.96 -		
2.4 D, 55 kW	08.97 -		
2.5 TDI, 65 kW	12.98 -		
2.5 TDI, 111 kW	09.00 -		

VOLKSWAGEN

TRANSPORTER T4 07.90 -
Kasten/Box/Furgón/Van (70XA)

Lagerung, Lenker / Mounting, wishbone

I12/A39

25931 **701 407 077 A**

ALL TYPES ausser/except for :

2.5 TDI, 75 kW	09.00 -
2.5 TDI, 111 kW	09.00 -

Stange/Strebe, Stabilisator / Rod/Strut, stabiliser

Pendelstange / Suspension Rod
Gewindemaß / Thread Size:M12x1,5
Durchmesser Stabilisator [mm] / Stabilizer Diameter [mm]:27

21044 **701 411 049 B**

ALL TYPES ausser/except for :

2.5 TDI, 75 kW	09.00 -
2.5 TDI, 111 kW	09.00 -

Stabilisatorlager / Mounting, Stabilizer

17682 **7D0 411 045**

ALL TYPES ausser/except for :

2.5 TDI, 75 kW	09.00 -
2.5 TDI, 111 kW	09.00 -

Stabilisatorlager / Mounting, Stabilizer

19129 **701 411 041**

2.0	07.90 -	->Chass. 70-T-199 999
2.5, 81 kW	11.90 -	
2.5 Syncro, 81 kW	10.92 -	
1.9 D	07.90 -	
1.9 TD	10.92 -	
2.4 D, 57 kW	07.90 -	
2.4 D Syncro	10.92 -	

Faltenbalgsatz, Lenkung / Bellow Kit, steering system

30127 **7D0 419 831**

ALL TYPES ausser/except for :

2.5 TDI, 75 kW	09.00 -
2.5 TDI, 111 kW	09.00 -

Achsträgerlager / Mounting, axle bracket

26572 **701 599 381**

2.5 Syncro	10.92 - .
2.4 D Syncro	10.92 -
2.5 TDI Syncro	09.95 -

VOLKSWAGEN

TRANSPORTER T4 07.90 -
Pritsche,Fahrgestell / Flatbed,Chassis Cab (70XD)

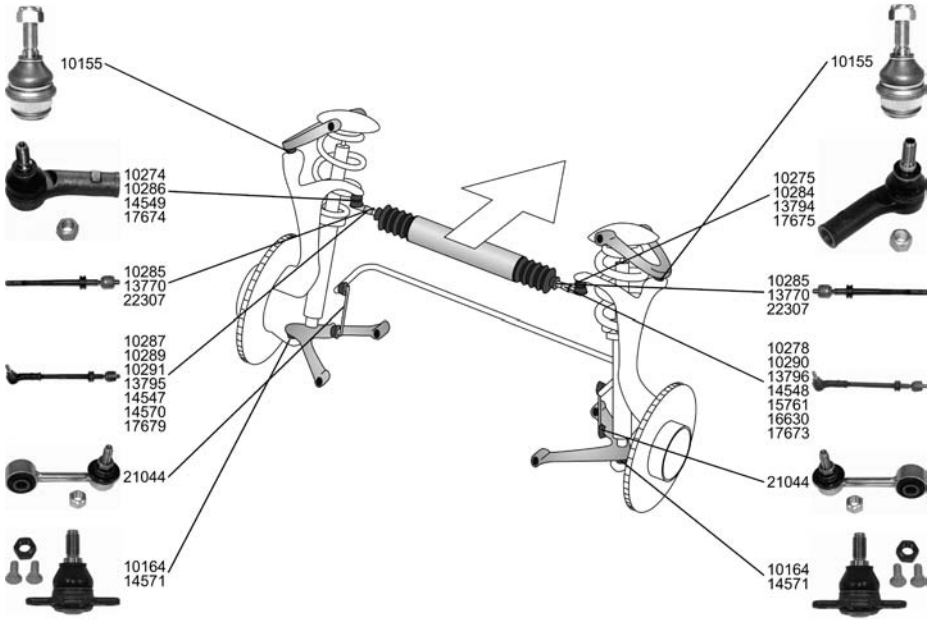

Spurstange / Tie Rod, steering Konusmaß [mm] / Cone Size [mm]:16 Rohr-Ø [mm] / Pipe Ø [mm]:16			**10278** **701 419 804 D**
2.0 2.5, 81 kW 1.9 D 2.4 D, 57 kW	07.90 - 11.90 - 07.90 - 09.90 -	Chass. 70-M-096 449 - Chass. 70-S-002 791	
2.5 Syncro, 81 kW 1.9 TD 2.4 D Syncro	10.92 - 10.92 - 10.92 -	->Chass. 70-S-002 791	
Spurstange / Tie Rod, steering Konusmaß [mm] / Cone Size [mm]:16 Rohr-Ø [mm] / Pipe Ø [mm]:16 mit Zubehör / With accessories			**10287** **702 419 803 B**
2.0 2.5, 81 kW 1.9 D 2.4 D, 57 kW	07.90 - 11.90 - 07.90 - 09.90 -	RHD Chass. 70-M-096 449 - Chass. 70-S-002 791 ---------- RHD LHD Chass. 70-M-096 449 - Chass. 70-S-002 791	
2.5 Syncro, 81 kW 1.9 TD 2.4 D Syncro	10.92 - 10.92 - 10.92 -	RHD ->Chass. 70-S-002 791 ---------- RHD LHD ->Chass. 70-S-002 791	
Spurstange / Tie Rod, steering Konusmaß [mm] / Cone Size [mm]:16 mit Zubehör / With accessories		LHD	**10289** **701 419 803 D**
2.0 2.5, 81 kW 1.9 D 2.4 D, 57 kW	07.90 - 11.90 - 07.90 - 09.90 -	Chass. 70-M-096 449 - Chass. 70-S-002 791	
2.5 Syncro, 81 kW 1.9 TD 2.4 D Syncro	10.92 - 10.92 - 10.92 -	->Chass. 70-S-002 791	

VOLKSWAGEN

TRANSPORTER T4 07.90 -
Pritsche,Fahrgestell / Flatbed,Chassis Cab (70XD)

Spurstange / Tie Rod, steering Konusmaß [mm] / Cone Size [mm]:14 mit Zubehör / With accessories		LHD	**10290** **701 419 804 C**
2.0 2.5, 81 kW 1.9 D 2.4 D, 57 kW	07.90 - 11.90 - 07.90 - 09.90 -	->Chass. 70-M-096 448	
Spurstange / Tie Rod, steering Konusmaß [mm] / Cone Size [mm]:14		LHD	**10291** **701 419 803 C**
2.0 2.5, 81 kW 1.9 D 2.4 D, 57 kW	07.90 - 11.90 - 07.90 - 09.90 -	->Chass. 70-M-096 448	
Spurstange / Tie Rod, steering Konusmaß [mm] / Cone Size [mm]:14 Rohr-Ø [mm] / Pipe Ø [mm]:16 mit Zubehör / With accessories			**13795** **702 419 803 A**
2.0 2.5, 81 kW 1.9 D 2.4 D, 57 kW	07.90 - 11.90 - 07.90 - 09.90 -	RHD ->Chass. 70-M-096 448 ---------- RHD LHD ->Chass. 70-M-096 448	
Spurstange / Tie Rod, steering Konusmaß [mm] / Cone Size [mm]:16		RHD	**13796** **702 419 804 B**
2.0 2.5, 81 kW 1.9 D 2.4 D, 57 kW	07.90 - 11.90 - 07.90 - 09.90 -	Chass. 70-M-096 449 - Chass. 70-S-002 791	
2.5 Syncro, 81 kW 1.9 TD 2.4 D Syncro	10.92 - 10.92 - 10.92 -	->Chass. 70-S-002 791	
Spurstange / Tie Rod, steering Konusmaß [mm] / Cone Size [mm]:18 Rohr-Ø [mm] / Pipe Ø [mm]:16		LHD	**14547** **701 419 803 E**
2.0 2.5, 81 kW 2.5 Syncro, 81 kW 1.9 D 1.9 TD 2.4 D, 57 kW 2.4 D Syncro	07.90 - 11.90 - 10.92 - 07.90 - 10.92 - 09.90 - 10.92 -	Chass. 70-S-002 792 - Chass. 70-T-199 999	
Spurstange / Tie Rod, steering Konusmaß [mm] / Cone Size [mm]:18		LHD	**14548** **701 419 804 E**
2.0 2.5, 81 kW 2.5 Syncro, 81 kW 1.9 D 1.9 TD 2.4 D, 57 kW 2.4 D Syncro	07.90 - 11.90 - 10.92 - 07.90 - 10.92 - 09.90 - 10.92 -	Chass. 70-S-002 792 - Chass. 70-T-199 999	
Spurstange / Tie Rod, steering Konusmaß [mm] / Cone Size [mm]:18			**14570** **702 419 803 C**
2.0 2.5, 81 kW 2.5 Syncro, 81 kW 1.9 D 1.9 TD 2.4 D, 57 kW	07.90 - 11.90 - 10.92 - 07.90 - 10.92 - 09.90 -	RHD Chass. 70-S-002 792 - Chass. 70-T-199 999 ---------- RHD LHD Chass. 70-S-002 792 - Chass. 70-T-199 999	
2.4 D Syncro	10.92 -	RHD Chass. 70-S-002 792 - Chass. 70-T-199 999 ---------- RHD LHD ->Chass. 70-S-002 792 ->Chass. 70-T-199 999	

VOLKSWAGEN

TRANSPORTER T4 Pritsche,Fahrgestell / Flatbed,Chassis Cab (70XD) 07.90 -

Spurstange / Tie Rod, steering Konusmaß [mm] / Cone Size [mm]:14		RHD	**15761** **702 419 804 A**
2.0	07.90 -	->Chass. 70-M-096 448	
2.5, 81 kW	11.90 -		
1.9 D	07.90 -		
2.4 D, 57 kW	09.90 -		
Spurstange / Tie Rod, steering Konusmaß [mm] / Cone Size [mm]:18			**16630** **702 419 804 C**
2.0	07.90 -	RHD Chass. 70-S-002 792 - Chass. 70-T-199 999 ---------- RHD LHD Chass. 70-S-002 792 - Chass. 70-T-199 999	
2.5, 81 kW	11.90 -		
2.5 Syncro, 81 kW	10.92 -		
1.9 D	07.90 -		
1.9 TD	10.92 -		
2.4 D, 57 kW	09.90 -		
2.4 D Syncro	10.92 -	RHD Chass. 70-S-002 792 - Chass. 70-T-199 999 ---------- RHD LHD ->Chass. 70-S-002 792 ->Chass. 70-T-199 999	
Spurstange / Tie Rod, steering Konusmaß [mm] / Cone Size [mm]:18 mit Zubehör / With accessories			**17673** **701 419 804 F**
2.0	07.90 -	Chass. 70-T-200 000->	
2.5, 81 kW	11.90 -		
2.5 Syncro, 81 kW	10.92 -		
1.9 D	07.90 -		
1.9 TD	10.92 -		
2.4 D, 57 kW	09.90 -		
2.4 D Syncro	10.92 -		
2.5 TDI, 75 kW	09.95 -		
2.5, 85 kW	08.96 -		
2.5 Syncro, 85 kW	08.96 -		
2.4 D, 55 kW	08.97 -		
2.5 TDI, 65 kW	05.98 -		
2.5 TDI Syncro	05.98 -		
2.5 TDI Syncro	05.98 -		
Spurstange / Tie Rod, steering Konusmaß [mm] / Cone Size [mm]:18 Rohr-Ø [mm] / Pipe Ø [mm]:16,5 mit Zubehör / With accessories			**17679** **702 419 803 D**
2.0	07.90 -	Chass. 70-T-200 000->	
2.5, 81 kW	11.90 -		
2.5 Syncro, 81 kW	10.92 -		
1.9 D	07.90 -		
1.9 TD	10.92 -		
2.4 D, 57 kW	09.90 -		
2.4 D Syncro	10.92 -		
2.5 TDI, 75 kW	09.95 -		
2.5, 85 kW	08.96 -		
2.5 Syncro, 85 kW	08.96 -		
2.4 D, 55 kW	08.97 -		
2.5 TDI, 65 kW	05.98 -		
2.5 TDI Syncro	05.98 -		
2.5 TDI Syncro	05.98 -		
Spurstangenkopf / Tie-rod End			**10274** **701 419 811 B**
2.0	07.90 -	Chass. 70-M-096 449 - Chass. 70-S-002 791	
2.5, 81 kW	11.90 -		
1.9 D	07.90 -		
2.4 D, 57 kW	09.90 -		
2.5 Syncro, 81 kW	10.92 -	->Chass. 70-S-002 791	
1.9 TD	10.92 -		
2.4 D Syncro	10.92 -		

VOLKSWAGEN

TRANSPORTER T4 07.90 -
Pritsche,Fahrgestell / Flatbed,Chassis Cab (70XD)

Spurstangenkopf / Tie-rod End
Konusmaß [mm] / Cone Size [mm]:18
Gewindeart: mit Rechtsgewinde / Thread Type: with right-hand thread

10275 **701 419 812 B**

2.0	07.90 -	Chass. 70-S-002 792 - Chass. 70-T-199 999
2.5, 81 kW	11.90 -	
2.5 Syncro, 81 kW	10.92 -	
1.9 D	07.90 -	
1.9 TD	10.92 -	
2.4 D, 57 kW	09.90 -	
2.4 D Syncro	10.92 -	

Spurstangenkopf / Tie-rod End
Konusmaß [mm] / Cone Size [mm]:14
Gewindeart: mit Rechtsgewinde / Thread Type: with right-hand thread

10284 **701 419 812**

2.0	07.90 -	->Chass. 70-M-096 448
2.5, 81 kW	11.90 -	
1.9 D	07.90 -	
2.4 D, 57 kW	09.90 -	

Spurstangenkopf / Tie-rod End
Konusmaß [mm] / Cone Size [mm]:14
Gewindeart: mit Rechtsgewinde / Thread Type: with right-hand thread

10286 **701 419 811 A**

2.0	07.90 -	->Chass. 70-M-096 448
2.5, 81 kW	11.90 -	
1.9 D	07.90 -	
2.4 D, 57 kW	09.90 -	

Spurstangenkopf / Tie-rod End

13794 **701 419 812 A**

2.0	07.90 -	Chass. 70-M-096 449 - Chass. 70-S-002 791
2.5, 81 kW	11.90 -	
1.9 D	07.90 -	
2.4 D, 57 kW	09.90 -	
2.5 Syncro, 81 kW	10.92 -	->Chass. 70-S-002 791
1.9 TD	10.92 -	
2.4 D Syncro	10.92 -	

Spurstangenkopf / Tie-rod End
Konusmaß [mm] / Cone Size [mm]:18
Gewindeart: mit Rechtsgewinde / Thread Type: with right-hand thread

14549 **701 419 811 C**

2.0	07.90 -	Chass. 70-S-002 792 - Chass. 70-T-199 999
2.5, 81 kW	11.90 -	
2.5 Syncro, 81 kW	10.92 -	
1.9 D	07.90 -	
1.9 TD	10.92 -	
2.4 D, 57 kW	09.90 -	
2.4 D Syncro	10.92 -	

Spurstangenkopf / Tie-rod End
Konusmaß [mm] / Cone Size [mm]:18
Gewindeart: mit Rechtsgewinde / Thread Type: with right-hand thread
mit Zubehör / With accessories

17674 **701 419 811 E**

2.0	07.90 -	Chass. 70-T-200 000->
2.5, 81 kW	11.90 -	
2.5 Syncro, 81 kW	10.92 -	
1.9 D	07.90 -	
1.9 TD	10.92 -	
2.4 D, 57 kW	09.90 -	
2.4 D Syncro	10.92 -	
2.5 TDI, 75 kW	09.95 -	
2.5, 85 kW	08.96 -	
2.5 Syncro, 85 kW	08.96 -	
2.4 D, 55 kW	08.97 -	
2.5 TDI, 65 kW	05.98 -	
2.5 TDI Syncro	05.98 -	
2.5 TDI Syncro	05.98 -	

VOLKSWAGEN

TRANSPORTER T4 07.90 -
Pritsche,Fahrgestell / Flatbed,Chassis Cab (70XD)

Spurstangenkopf / Tie-rod End
Konusmaß [mm] / Cone Size [mm]:18
Gewindeart: mit Rechtsgewinde / Thread Type: with right-hand thread
mit Zubehör / With accessories

17675 **701 419 812 D**

2.0	07.90 -	Chass. 70-T-200 000->
2.5, 81 kW	11.90 -	
2.5 Syncro, 81 kW	10.92 -	
1.9 D	07.90 -	
1.9 TD	10.92 -	
2.4 D, 57 kW	09.90 -	
2.4 D Syncro	10.92 -	
2.5 TDI, 75 kW	09.95 -	
2.5, 85 kW	08.96 -	
2.5 Syncro, 85 kW	08.96 -	
2.4 D, 55 kW	08.97 -	
2.5 TDI, 65 kW	05.98 -	
2.5 TDI Syncro	05.98 -	
2.5 TDI Syncro	05.98 -	

Axialgelenk, Spurstange / Axial Rod, tie rod
Gewindemaß / Thread Size:M14x1,5
Gewindeart: mit Rechtsgewinde / Thread Type: with right-hand thread
für OE / for OE 025 390 091/092 617

10285 **701 419 810 A**

2.0	07.90 -	->Chass. 70-T-199999
2.5, 81 kW	11.90 -	
2.5 Syncro, 81 kW	10.92 -	
1.9 D	07.90 -	
1.9 TD	10.92 -	
2.4 D, 57 kW	09.90 -	
2.4 D Syncro	10.92 -	
2.5 TDI, 75 kW	09.95 -	
2.5 TDI, 65 kW	05.98 -	
2.5 TDI Syncro	05.98 -	

Axialgelenk, Spurstange / Axial Rod, tie rod
Gewindeart: mit Rechtsgewinde / Thread Type: with right-hand thread
für OE / for OE 025 390 090/093 617

13770 **701 419 810**

2.0	07.90 -	->Chass. 70-T-199999
2.5, 81 kW	11.90 -	
2.5 Syncro, 81 kW	10.92 -	
1.9 D	07.90 -	
1.9 TD	10.92 -	
2.4 D, 57 kW	09.90 -	
2.4 D Syncro	10.92 -	

Axialgelenk, Spurstange / Axial Rod, tie rod
für OE / for OE 025 390 123 617 LH

22307 **701 419 804 F**
701 419 810 B
702 419 803 D

2.0	07.90 -	Chass. 70-T-200000->
2.5, 81 kW	11.90 -	
1.9 D	07.90 -	
2.4 D, 57 kW	09.90 -	
2.5 TDI, 65 kW	05.98 -	
2.5 TDI Syncro	05.98 -	
2.5 Syncro, 81 kW	10.92 -	Chass. 70-T-200000->
1.9 TD	10.92 -	
2.4 D Syncro	10.92 -	
2.5 TDI, 75 kW	09.95 -	
2.5, 85 kW	08.96 -	
2.5 Syncro, 85 kW	08.96 -	
2.4 D, 55 kW	08.97 -	

Trag-/Führungsgelenk / Support-/ Steering Link

10155 **701 407 187 B**

ALL TYPES ausser/except for :	
2.5TDI	09.00 -

VOLKSWAGEN

TRANSPORTER T4 07.90 -
Pritsche,Fahrgestell / Flatbed,Chassis Cab (70XD)

Trag-/Führungsgelenk / Support-/ Steering Link
Lochabstand 1/Lochabstand 2 / Hole Pitch 1/ Hole Pitch 2:80
mit Zubehör / With accessories

10164 **701 407 361 B**

2.0	07.90 -	->Chass. 70-T-199 999
2.5, 81 kW	11.90 -	
2.5 Syncro, 81 kW	10.92 -	
1.9 D	07.90 -	
1.9 TD	10.92 -	
2.4 D, 57 kW	09.90 -	
2.4 D Syncro	10.92 -	

Trag-/Führungsgelenk / Support-/ Steering Link
Lochabstand 1/Lochabstand 2 / Hole Pitch 1/ Hole Pitch 2:80

14571 **7D0 407 361**

2.0	07.90 -	Chass. 70-T-2-000 001->
2.5, 81 kW	11.90 -	
2.5 Syncro, 81 kW	10.92 -	
1.9 D	07.90 -	
1.9 TD	10.92 -	
2.4 D, 57 kW	09.90 -	
2.4 D Syncro	10.92 -	
2.5 TDI, 75 kW	09.95 -	
2.5, 85 kW	08.96 -	
2.5 Syncro, 85 kW	08.96 -	
2.4 D, 55 kW	08.97 -	
2.5 TDI Syncro	05.98 -	
2.5 TDI, 65 kW	05.98 -	

Lagerung, Lenker / Mounting, wishbone I12/A35

14554 **701 407 087**

ALL TYPES ausser/except for :	
2.5TDI	09.00 -

Lagerung, Lenker / Mounting, wishbone

14555 **7D0 407 140 A**

2.0	07.90 -	Chass. 70-M-083 343->
2.5, 81 kW	11.90 -	
1.9 D	07.90 -	
2.4 D, 57 kW	09.90 -	
2.5 Syncro	10.92 - .	
2.5, 85 kW	08.96 -	
1.9 TD	10.92 -	
2.4 D, 55 kW	08.97 -	
2.4 D Syncro	10.92 -	
2.5 TDI Syncro	05.98 -	
2.5 TDI	09.95 - .	
2.5 TDI Syncro	05.98 -	

Lagerung, Lenker / Mounting, wishbone I14/A35

14556 **701 407 183**

2.0	07.90 -	->Chass. 70-T-199 999
2.5, 81 kW	11.90 -	
2.5 Syncro, 81 kW	10.92 -	
1.9 D	07.90 -	
1.9 TD	10.92 -	
2.4 D, 57 kW	09.90 -	
2.4 D Syncro	10.92 -	

Lagerung, Lenker / Mounting, wishbone I40/A60

17681 **7D0 407 183**

2.0	07.90 -	Chass. 70-T-200 000->
2.5, 81 kW	11.90 -	
2.5 Syncro, 81 kW	10.92 -	
1.9 D	07.90 -	
1.9 TD	10.92 -	
2.4 D, 57 kW	09.90 -	
2.4 D Syncro	10.92 -	
2.5 TDI, 75 kW	09.95 -	
2.5, 85 kW	08.96 -	
2.5 Syncro, 85 kW	08.96 -	
2.4 D, 55 kW	08.97 -	
2.5 TDI, 65 kW	05.98 -	
2.5 TDI Syncro	05.98 -	
2.5 TDI Syncro	05.98 -	

VOLKSWAGEN

TRANSPORTER T4 07.90 -
Pritsche,Fahrgestell / Flatbed,Chassis Cab (70XD)

Lagerung, Lenker / Mounting, wishbone — I12/A39 — **25931** — **701 407 077 A**

ALL TYPES ausser/except for :

2.5TDI	09.00 -

Stange/Strebe, Stabilisator / Rod/Strut, stabiliser — **21044** — **701 411 049 B**

Pendelstange / Suspension Rod
Gewindemaß / Thread Size:M12x1,5
Durchmesser Stabilisator [mm] / Stabilizer Diameter [mm]:27

ALL TYPES ausser/except for :

2.5TDI	09.00 -

Stabilisatorlager / Mounting, Stabilizer — **17682** — **7D0 411 045**

ALL TYPES ausser/except for :

2.5TDI	09.00 -

Stabilisatorlager / Mounting, Stabilizer — **19129** — **701 411 041**

2.0	07.90 -	->Chass. 70-T-199 999
2.5, 81 kW	11.90 -	
2.5 Syncro, 81 kW	10.92 -	
1.9 D	07.90 -	
1.9 TD	10.92 -	
2.4 D, 57 kW	09.90 -	
2.4 D Syncro	10.92 -	

Faltenbalgsatz, Lenkung / Bellow Kit, steering system — **30127** — **7D0 419 831**

ALL TYPES ausser/except for :

2.5TDI	09.00 -

Achsträgerlager / Mounting, axle bracket — **26572** — **701 599 381**

2.5 Syncro	10.92 - .
2.4 D Syncro	10.92 -
2.5 TDI Syncro	05.98 -

VOLKSWAGEN

TRANSPORTER T5 Bus/Familial (7HB, 7HJ) 03.04 -

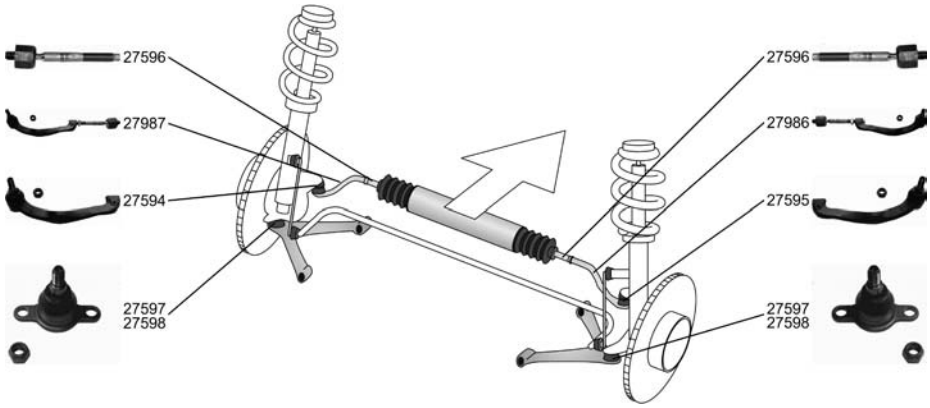

Spurstange / Tie Rod, steering Konusmaß [mm] / Cone Size [mm]:20 mit Befestigungsmaterial / with fastening material ALL TYPES		**27986** **7H0 419 804 D** 27595 27596
Spurstange / Tie Rod, steering Konusmaß [mm] / Cone Size [mm]:20 mit Befestigungsmaterial / with fastening material ALL TYPES		**27987** **7H0 419 803 D** 27594 27596
Spurstangenkopf / Tie-rod End Konusmaß [mm] / Cone Size [mm]:20 ALL TYPES		**27594** **7H0 422 817 C**
Spurstangenkopf / Tie-rod End Konusmaß [mm] / Cone Size [mm]:20 ALL TYPES		**27595** **7H0 422 818 C**
Axialgelenk, Spurstange / Axial Rod, tie rod ALL TYPES		**27596** **7H0 422 817 C** **7H0 422 818 C**
Trag-/Führungsgelenk / Support-/ Steering Link Konusmaß [mm] / Cone Size [mm]:22 ALL TYPES	zul. Gesamtgewicht [kg] / Gross Vehicle Weight [kg]:3000	**27597** **7H0 407 361**
Trag-/Führungsgelenk / Support-/ Steering Link Konusmaß [mm] / Cone Size [mm]:22 ALL TYPES	zul. Gesamtgewicht [kg] / Gross Vehicle Weight [kg]:3200	**27598** **7H8 407 361 A**
Lagerung, Lenker / Mounting, wishbone zul. Gesamtgewicht [kg] / Gross Vehicle Weight [kg]:3200 ALL TYPES ausser/except for : 2.5 TDI 4motion 07.04 - .		**26935** **7H0 407 182**

VOLKSWAGEN

TRANSPORTER T5 Bus/Familial (7HB, 7HJ) 03.04 -

Lagerung, Lenker / Mounting, wishbone zul. Gesamtgewicht [kg] / Gross Vehicle Weight [kg]:3000 ALL TYPES ausser/except for : 2.5 TDI 4motion 07.04 - .		**26936** **7H0 407 182 A**
Lagerung, Lenker / Mounting, wishbone ALL TYPES ausser/except for : 2.5 TDI 4motion 07.04 - .		**26937** **7H0 407 183**

TRANSPORTER T5 Kasten/Box/Furgón/Van (7HA, 7HH) 03.04 -

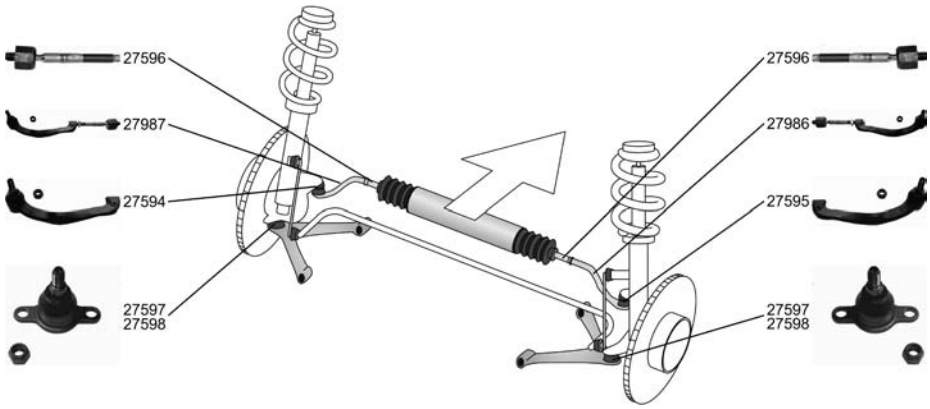

Spurstange / Tie Rod, steering Konusmaß [mm] / Cone Size [mm]:20 mit Befestigungsmaterial / with fastening material ALL TYPES		**27986** **7H0 419 804 D** 27595 27596
Spurstange / Tie Rod, steering Konusmaß [mm] / Cone Size [mm]:20 mit Befestigungsmaterial / with fastening material ALL TYPES		**27987** **7H0 419 803 D** 27594 27596
Spurstangenkopf / Tie-rod End Konusmaß [mm] / Cone Size [mm]:20 ALL TYPES		**27594** **7H0 422 817 C**
Spurstangenkopf / Tie-rod End Konusmaß [mm] / Cone Size [mm]:20 ALL TYPES		**27595** **7H0 422 818 C**
Axialgelenk, Spurstange / Axial Rod, tie rod ALL TYPES		**27596** **7H0 422 817 C** **7H0 422 818 C**
Trag-/Führungsgelenk / Support-/ Steering Link Konusmaß [mm] / Cone Size [mm]:22 ALL TYPES	zul. Gesamtgewicht [kg] / Gross Vehicle Weight [kg]:3000	**27597** **7H0 407 361**

VOLKSWAGEN

TRANSPORTER T5 03.04 - Kasten/Box/Furgón/Van (7HA, 7HH)

Trag-/Führungsgelenk / Support-/ Steering Link Konusmaß [mm] / Cone Size [mm]:22 ALL TYPES	zul. Gesamtgewicht [kg] / Gross Vehicle Weight [kg]:3200	**27598** **7H8 407 361 A**
Lagerung, Lenker / Mounting, wishbone zul. Gesamtgewicht [kg] / Gross Vehicle Weight [kg]:3200 ALL TYPES ausser/except for : 2.5 TDI 4motion 07.04 - .		**26935** **7H0 407 182**
Lagerung, Lenker / Mounting, wishbone zul. Gesamtgewicht [kg] / Gross Vehicle Weight [kg]:3000 ALL TYPES ausser/except for : 2.5 TDI 4motion 07.04 - .		**26936** **7H0 407 182 A**
Lagerung, Lenker / Mounting, wishbone ALL TYPES ausser/except for : 2.5 TDI 4motion 07.04 - .		**26937** **7H0 407 183**

TRANSPORTER T5 03.04 - Pritsche/Fahrg./Flatbed,Chassis (7JD,7JE,7JL)

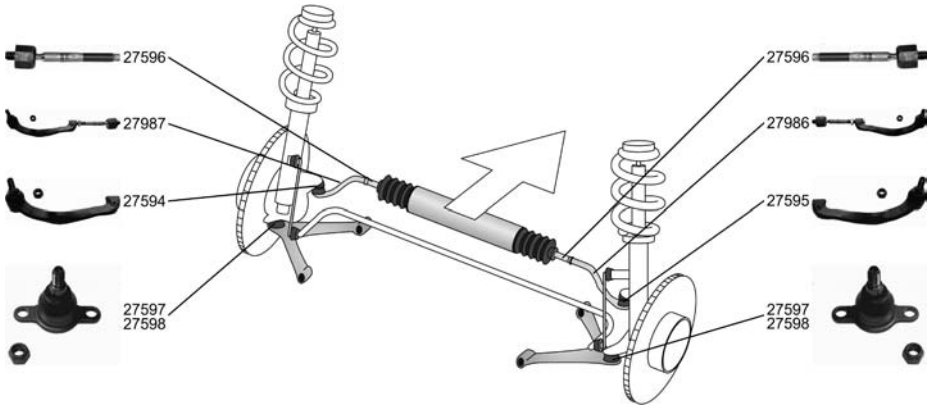

Spurstange / Tie Rod, steering Konusmaß [mm] / Cone Size [mm]:20 mit Befestigungsmaterial / with fastening material ALL TYPES		**27986** **7H0 419 804 D** 27595 27596
Spurstange / Tie Rod, steering Konusmaß [mm] / Cone Size [mm]:20 mit Befestigungsmaterial / with fastening material ALL TYPES		**27987** **7H0 419 803 D** 27594 27596
Spurstangenkopf / Tie-rod End Konusmaß [mm] / Cone Size [mm]:20 ALL TYPES		**27594** **7H0 422 817 C**

VOLKSWAGEN

TRANSPORTER T5 03.04 -
Pritsche/Fahrg./Flatbed,Chassis
(7JD,7JE,7JL)

Spurstangenkopf / Tie-rod End Konusmaß [mm] / Cone Size [mm]:20 ALL TYPES		**27595** **7H0 422 818 C**
Axialgelenk, Spurstange / Axial Rod, tie rod ALL TYPES		**27596** **7H0 422 817 C** **7H0 422 818 C**
Trag-/Führungsgelenk / Support-/ Steering Link Konusmaß [mm] / Cone Size [mm]:22 ALL TYPES	zul. Gesamtgewicht [kg] / Gross Vehicle Weight [kg]:3000	**27597** **7H0 407 361**
Trag-/Führungsgelenk / Support-/ Steering Link Konusmaß [mm] / Cone Size [mm]:22 ALL TYPES	zul. Gesamtgewicht [kg] / Gross Vehicle Weight [kg]:3200	**27598** **7H8 407 361 A**
Lagerung, Lenker / Mounting, wishbone zul. Gesamtgewicht [kg] / Gross Vehicle Weight [kg]:3200 ALL TYPES ausser/except for : 2.5 TDI 4motion 07.04 -		**26935** **7H0 407 182**
Lagerung, Lenker / Mounting, wishbone zul. Gesamtgewicht [kg] / Gross Vehicle Weight [kg]:3000 ALL TYPES ausser/except for : 2.5 TDI 4motion 07.04 -		**26936** **7H0 407 182 A**
Lagerung, Lenker / Mounting, wishbone ALL TYPES ausser/except for : 2.5 TDI 4motion 07.04 -		**26937** **7H0 407 183**

VOLKSWAGEN

VENTO (1H2) 11.91 - 09.98

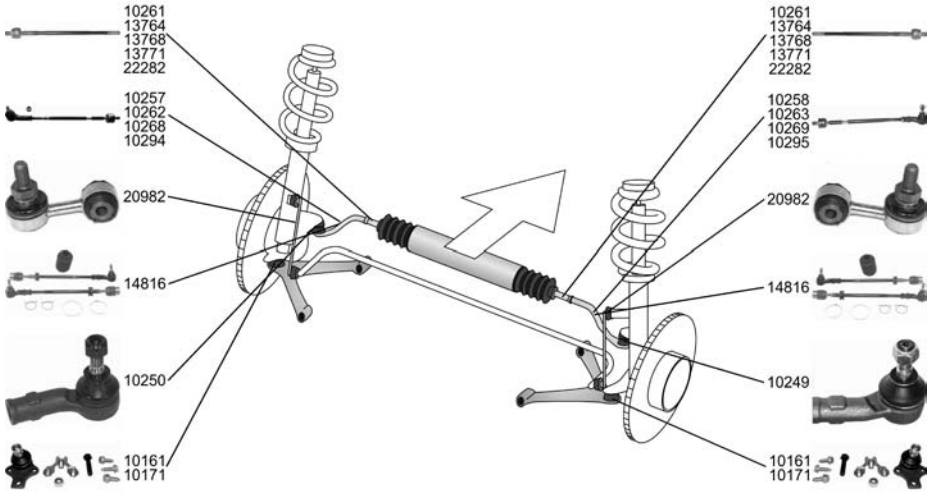

Spurstange / Tie Rod, steering Konusmaß [mm] / Cone Size [mm]:14 nur in Verbindung mit / Only in connection with:299 000 029 617 Rohr-Ø [mm] / Pipe Ø [mm]:15 Rohrdurchmesser am Sitz für Faltenbalg 12,7 mm (TRW-Lenkung) / Tube diameter at bellows seating 12,7 mm (TRW-steering)		**10257** **1H0 422 803**
1.4 11.91 - 09.98 1.6, 55 kW 09.92 - 09.98 1.6, 74 kW 10.94 - 09.98 1.8 11.91 - 09.98 1.9 D 11.91 - 09.98 1.9 TD 11.91 - 09.98 1.9 TDI 09.93 - 09.98	für / for:TRW	
Spurstange / Tie Rod, steering Rohrdurchmesser am Sitz für Faltenbalg 12,7 mm (TRW-Lenkung) / Tube diameter at bellows seating 12,7 mm (TRW-steering)		**10258** **1H0 422 804**
1.4 11.91 - 09.98 1.6, 55 kW 09.92 - 09.98 1.6, 74 kW 10.94 - 09.98 1.8 11.91 - 09.98 1.9 D 11.91 - 09.98 1.9 TD 11.91 - 09.98 1.9 TDI 09.93 - 09.98	für / for:TRW	
Spurstange / Tie Rod, steering Achsausführung / Axle Version:TRW Konusmaß [mm] / Cone Size [mm]:14 nur in Verbindung mit / Only in connection with:299 000 029 617 Rohr-Ø [mm] / Pipe Ø [mm]:15 Rohrdurchmesser am Sitz für Faltenbalg 12,7 mm (TRW-Lenkung) / Tube diameter at bellows seating 12,7 mm (TRW-steering)		**10262** **1H0 422 803 A**
2.0, 85 kW 11.91 - 09.98 2.8 VR6 01.92 - 09.98		
Spurstange / Tie Rod, steering Konusmaß [mm] / Cone Size [mm]:14 Rohr-Ø [mm] / Pipe Ø [mm]:15 Rohrdurchmesser am Sitz für Faltenbalg 12,7 mm (TRW-Lenkung) / Tube diameter at bellows seating 12,7 mm (TRW-steering)		**10263** **1H0 422 804 A**
2.0, 85 kW 11.91 - 09.98 2.8 VR6 01.92 - 09.98		

VOLKSWAGEN

VENTO (1H2) 11.91 - 09.98

Spurstange / Tie Rod, steering
Konusmaß [mm] / Cone Size [mm]:14
Rohr-Ø [mm] / Pipe Ø [mm]:13
nur in Verbindung mit / Only in connection with:299 217 163 617
für / for:ZF
Rohrdurchmesser am Sitz für Faltenbalg 15 mm (ZF-Lenkung) / Tube diameter at bellows seating 15 mm (ZF-steering)

10268 **1H0 422 803 B**
10250

1.4	11.91 - 09.98
1.6, 55 kW	09.92 - 09.98
1.6, 74 kW	10.94 - 09.98
1.8	11.91 - 09.98
2.0, 85 kW	11.91 - 09.98
2.8 VR6	01.92 - 09.98
1.9 D	11.91 - 09.98
1.9 TD	11.91 - 09.98
1.9 TDI	09.93 - 09.98

Spurstange / Tie Rod, steering
für / for:ZF
Konusmaß [mm] / Cone Size [mm]:14
Rohr-Ø [mm] / Pipe Ø [mm]:13
Rohrdurchmesser am Sitz für Faltenbalg 15 mm (ZF-Lenkung) / Tube diameter at bellows seating 15 mm (ZF-steering)

10269 **1H0 422 804 B**
10249

1.4	11.91 - 09.98
1.6, 55 kW	09.92 - 09.98
1.6, 74 kW	10.94 - 09.98
1.8	11.91 - 09.98
2.0, 85 kW	11.91 - 09.98
2.8 VR6	01.92 - 09.98
1.9 D	11.91 - 09.98
1.9 TD	11.91 - 09.98
1.9 TDI	09.93 - 09.98

Spurstange / Tie Rod, steering
Konusmaß [mm] / Cone Size [mm]:14
Rohr-Ø [mm] / Pipe Ø [mm]:13
mit Zubehör / With accessories

10294 **1H0 419 803**

1.4	11.91 - 09.98
1.6, 55 kW	09.92 - 09.98
1.6, 74 kW	10.94 - 09.98
1.8	11.91 - 09.98
1.9 D	11.91 - 09.98
1.9 TD	11.91 - 09.98

Spurstange / Tie Rod, steering
Konusmaß [mm] / Cone Size [mm]:14
Rohr-Ø [mm] / Pipe Ø [mm]:13
mit Zubehör / With accessories

10295 **1H0 419 804**

1.4	11.91 - 09.98
1.6, 55 kW	09.92 - 09.98
1.6, 74 kW	10.94 - 09.98
1.8	11.91 - 09.98
1.9 D	11.91 - 09.98
1.9 TD	11.91 - 09.98

Reparatursatz, Spurstange / Repair Kit, tie rod

14816 **1H0 498 803/804 Z**
10295
10294

1.4	11.91 - 09.98
1.6, 55 kW	09.92 - 09.98
1.6, 74 kW	10.94 - 09.98
1.8	11.91 - 09.98
1.9 D	11.91 - 09.98
1.9 TD	11.91 - 09.98

VOLKSWAGEN

VENTO (1H2) 11.91 - 09.98

Spurstangenkopf / Tie-rod End
Befestigungsart: hängend / Fastening Type: Suspended
Konusmaß [mm] / Cone Size [mm]:14
Innengewinde [mm] / Inner Thread [mm]:M14x1,5
Gewindeart: mit Rechtsgewinde / Thread Type: with right-hand thread
mit Zubehör / With accessories
Gewindemaß / Thread Size:M14x1,5

10249 **191 419 812**

1.4	11.91 - 09.98
1.6, 55 kW	09.92 - 09.98
1.6, 74 kW	10.94 - 09.98
1.8	11.91 - 09.98
2.0, 85 kW	11.91 - 09.98
2.8 VR6	01.92 - 09.98
1.9 SDI	04.97 - 09.98
1.9 D	11.91 - 09.98
1.9 TD	11.91 - 09.98
1.9 TDI	09.93 - 09.98

Spurstangenkopf / Tie-rod End
Befestigungsart: hängend / Fastening Type: Suspended
Konusmaß [mm] / Cone Size [mm]:14
Innengewinde [mm] / Inner Thread [mm]:M14x1,5
Gewindeart: mit Rechtsgewinde / Thread Type: with right-hand thread
mit Zubehör / With accessories
Gewindemaß / Thread Size:M14x1,5

10250 **191 419 811**

1.4	11.91 - 09.98
1.6, 55 kW	09.92 - 09.98
1.6, 74 kW	10.94 - 09.98
1.8	11.91 - 09.98
2.0, 85 kW	11.91 - 09.98
2.8 VR6	01.92 - 09.98
1.9 SDI	04.97 - 09.98
1.9 D	11.91 - 09.98
1.9 TD	11.91 - 09.98
1.9 TDI	09.93 - 09.98

Axialgelenk, Spurstange / Axial Rod, tie rod
für Lenkgetriebe-ID / For steering rack ID:TRW
ohne Zubehör / without accessories

10261 **1H0 422 807 D**

1.4, 44 kW	11.91 - 09.98
1.6, 55 kW	09.92 - 09.98
1.6, 74 kW	10.94 - 09.98
1.8	11.91 - 09.98
2.0, 85 kW	11.91 - 09.98
1.9 SDI	04.97 - 09.98
1.9 D	11.91 - 09.98
1.9 TD	11.91 - 09.98
1.9 TDI	09.93 - 09.98

Axialgelenk, Spurstange / Axial Rod, tie rod
Gewindemaß / Thread Size:M22x1,5
Gewindeart: mit Rechtsgewinde / Thread Type: with right-hand thread

13764 **1H0 419 807**

1.4	11.91 - 09.98
1.6, 55 kW	09.92 - 09.98
1.6, 74 kW	10.94 - 09.98
1.8	11.91 - 09.98
1.9 D	11.91 - 09.98
1.9 TD	11.91 - 09.98

Axialgelenk, Spurstange / Axial Rod, tie rod
für OE / for OE 025 390 111 617 LH
für / for:ZF
Rohrdurchmesser am Sitz für Faltenbalg 15 mm (ZF-Lenkung) / Tube diameter at bellows seating 15 mm (ZF-steering)

13768

1.4	11.91 - 09.98	Rohrdurchmesser am Sitz für Faltenbalg 15 mm (ZF-Lenkung) / Tube diameter at bellows seating 15 mm (ZF-steering)
1.6, 55 kW	09.92 - 09.98	
1.6, 74 kW	10.94 - 09.98	
1.8	11.91 - 09.98	
2.0, 85 kW	11.91 - 09.98	
2.8 VR6	01.92 - 09.98	
1.9 D	11.91 - 09.98	
1.9 TD	11.91 - 09.98	
1.9 TDI	09.93 - 09.98	

Axialgelenk, Spurstange / Axial Rod, tie rod
Achsausführung / Axle Version:TRW

13771 **1H0 422 807 A**

2.0, 85 kW	11.91 - 09.98
2.8 VR6	01.92 - 09.98

VOLKSWAGEN

VENTO (1H2) 11.91 - 09.98

Axialgelenk, Spurstange / Axial Rod, tie rod für OE / for OE 025 390 142 617 LH			**22282** **1J0 422 807 A**
1.9 SDI	04.97 - 09.98		
Lenker, Radaufhängung / Track Control Arm ohne Trag-/Führungsgelenk / without support/ steering link mit Gummilager / with rubber mounting nur in Verbindung mit / Only in connection with:10161			**14466** **1H0 407 151** 10205 10203
1.4	11.91 - 09.98		
1.6, 55 kW	09.92 - 09.98		
1.6, 74 kW	10.94 - 09.98		
1.8	11.91 - 09.98		
1.9 D	11.91 - 09.98		
1.9 TD	11.91 - 09.98		
1.9 TDI	09.93 - 09.98		
Trag-/Führungsgelenk / Support-/ Steering Link mit Zubehör / With accessories für OE / for OE 191 407 151 B			**10161** **357 407 365**
1.4	11.91 - 09.98		
1.6, 55 kW	09.92 - 09.98		
1.6, 74 kW	10.94 - 09.98		
1.8	11.91 - 09.98		
1.9 D	11.91 - 09.98		
1.9 TD	11.91 - 09.98		
1.9 TDI	09.93 - 09.98		
2.0, 85 kW	11.91 - 09.98	für / for:CL/GL/GLX	
Trag-/Führungsgelenk / Support-/ Steering Link Gewindemaß / Thread Size:M12x1,5 Gewindeart: mit Rechtsgewinde / Thread Type: with right-hand thread			**10171** **1H0 407 365**
2.0, 85 kW	11.91 - 09.98	für / for:GT	
2.8 VR6	01.92 - 09.98		
Lagerung, Lenker / Mounting, wishbone		I12/A33	**10203** **357 407 182**
1.4	11.91 - 09.98		
1.6, 55 kW	09.92 - 09.98		
1.6, 74 kW	10.94 - 09.98		
1.8	11.91 - 09.98		
2.0, 85 kW	11.91 - 09.98		
2.8 VR6	01.92 - 09.98		
1.9 SDI	04.97 - 09.98		
1.9 D	11.91 - 09.98		
1.9 TD	11.91 - 09.98		
1.9 TDI	09.93 - 09.98		
Lagerung, Lenker / Mounting, wishbone ohne Montagehülsen / without mounting sleeve			**10205** **191 407 181 E**
1.4	11.91 - 09.98		
1.6, 55 kW	09.92 - 09.98		
1.6, 74 kW	10.94 - 09.98		
1.8	11.91 - 09.98		
2.0, 85 kW	11.91 - 09.98		
2.8 VR6	01.92 - 09.98		
1.9 SDI	04.97 - 09.98		
1.9 D	11.91 - 09.98		
1.9 TD	11.91 - 09.98		
1.9 TDI	09.93 - 09.98		
Lagerung, Lenker / Mounting, wishbone mit Montagehülsen / with mounting sleeve			**25352** **191 407 181 E**
1.4	11.91 - 09.98		
1.6, 55 kW	09.92 - 09.98		
1.6, 74 kW	10.94 - 09.98		
1.8	11.91 - 09.98		
2.0, 85 kW	11.91 - 09.98		
2.8 VR6	01.92 - 09.98		
1.9 SDI	04.97 - 09.98		
1.9 D	11.91 - 09.98		
1.9 TD	11.91 - 09.98		
1.9 TDI	09.93 - 09.98		

VOLKSWAGEN

VENTO (1H2) 11.91 - 09.98

Stange/Strebe, Stabilisator / Rod/Strut, stabiliser Pendelstange / Suspension Rod mit Zubehör / With accessories			**20982** **535 411 315**
2.0, 85 kW	11.91 - 09.98	für / for:GT	
2.8 VR6	01.92 - 09.98		
Stabilisatorlager / Mounting, Stabilizer		I17	**14341** **191 411 314**
1.9 TDI, 81 kW	04.96 - 09.98		
Stabilisatorlager / Mounting, Stabilizer		I19	**27461** **1H0 411 314**
1.8, 55 kW	11.91 - 09.98	Durchmesser Stabilisator [mm] / Stabilizer Diameter [mm]:21,5	
2.8 VR6	01.92 - 09.98		
1.9 SDI	04.97 - 09.98		
1.9 D	11.91 - 09.98		
1.9 TD	11.91 - 09.98		
1.9 TDI, 81 kW	04.96 - 09.98		
1.9 TDI, 66 kW	09.93 - 09.98	Mot. AHU Durchmesser Stabilisator [mm] / Stabilizer Diameter [mm]:21,5	
1.4, 44 kW	11.91 - 09.98	Mot. ABD Durchmesser Stabilisator [mm] / Stabilizer Diameter [mm]:21,5	
1.6, 55 kW	09.92 - 09.98	Mot. AEE Durchmesser Stabilisator [mm] / Stabilizer Diameter [mm]:21,5	
1.8, 66 kW	11.91 - 09.98	Mot. ADZ Durchmesser Stabilisator [mm] / Stabilizer Diameter [mm]:21,5	
2.0, 85 kW	11.91 - 09.98	Mot. AGG Durchmesser Stabilisator [mm] / Stabilizer Diameter [mm]:21,5	
1.6, 74 kW	10.94 - 09.98	Mot. AFT Durchmesser Stabilisator [mm] / Stabilizer Diameter [mm]:21,5	
Faltenbalgsatz, Lenkung / Bellow Kit, steering system			**30111** **1H0 422 831 B**
1.4	11.91 - 09.98	Chass. 1H-N-000 241 - Chass. 1H-R-990 000	
1.6, 55 kW	09.92 - 09.98		
1.8	11.91 - 09.98		
2.0, 85 kW	11.91 - 09.98		
2.8 VR6	01.92 - 09.98		
1.9 D	11.91 - 09.98		
1.9 TD	11.91 - 09.98		
1.9 TDI, 66 kW	09.93 - 09.98		
1.6, 74 kW	10.94 - 09.98	für / for:TRW	
1.9 TDI, 81 kW	04.96 - 09.98		
1.9 SDI	04.97 - 09.98		
Faltenbalgsatz, Lenkung / Bellow Kit, steering system			**30126** **357 422 831 B**
1.4	11.91 - 09.98		
1.6, 55 kW	09.92 - 09.98		
1.6, 74 kW	10.94 - 09.98	für / for:ZF	
1.8	11.91 - 09.98		
2.0, 85 kW	11.91 - 09.98		
2.8 VR6	01.92 - 09.98		
1.9 D	11.91 - 09.98		
1.9 TD	11.91 - 09.98		
1.9 TDI	09.93 - 09.98		
Achskörperlager / Mounting, axle body			**10222** **1H0 501 541 A**
1.4	11.91 - 09.98		
1.6, 55 kW	09.92 - 09.98		
1.6, 74 kW	10.94 - 09.98		
1.8	11.91 - 09.98		
2.0, 85 kW	11.91 - 09.98		
2.8 VR6	01.92 - 09.98		
1.9 SDI	04.97 - 09.98		
1.9 D	11.91 - 09.98		
1.9 TD	11.91 - 09.98		
1.9 TDI	09.93 - 09.98		

VOLKSWAGEN

VENTO (1H2) 11.91 - 09.98

Achskörperlager / Mounting, axle body mit Zubehör / With accessories			**27681** **1H0 501 541 A**
1.4	11.91 - 09.98		
1.6, 55 kW	09.92 - 09.98		
1.6, 74 kW	10.94 - 09.98		
1.8	11.91 - 09.98		
2.0, 85 kW	11.91 - 09.98		
2.8 VR6	01.92 - 09.98		
1.9 SDI	04.97 - 09.98		
1.9 D	11.91 - 09.98		
1.9 TD	11.91 - 09.98		
1.9 TDI	09.93 - 09.98		

Artikelnummer Article No.	Seite Page	Hersteller Manufacturer
10043 Spurstange / Tie Rod, steering	90 93 95	VOLKSWAGEN
10125 Lagerung, Lenker / Mounting, wishbone	92 94 97	VOLKSWAGEN
10126 Lagerung, Lenker / Mounting, wishbone	93 94 97	VOLKSWAGEN
10142 LHD Spurstange / Tie Rod, steering	90 94 95 159	VOLKSWAGEN
10143 Spurstangenkopf / Tie-rod End	91 91 94 94 96 96 159 159	VOLKSWAGEN
10144 LHD Spurstange / Tie Rod, steering	136 138 140 141	VOLKSWAGEN
10145 LHD Spurstange / Tie Rod, steering	91 94 95 159	VOLKSWAGEN
10146 Spurstangenkopf / Tie-rod End	137 137 139 139 140 141	VOLKSWAGEN
10148 Trag-/Führungsgelenk / Support-/ Steering Link	91 94 96	VOLKSWAGEN
10149 Lenker, Radaufhängung / Track Control Arm	138 139 141 142	VOLKSWAGEN
10151 Trag-/Führungsgelenk / Support-/ Steering Link	92 94 97	VOLKSWAGEN
10153 Trag-/Führungsgelenk / Support-/ Steering Link	92 94 97 159	VOLKSWAGEN
10155 Trag-/Führungsgelenk / Support-/ Steering Link	177 183 190	VOLKSWAGEN
10157 Trag-/Führungsgelenk / Support-/ Steering Link	72 74 76 77 78	VOLKSWAGEN
10158 Trag-/Führungsgelenk / Support-/ Steering Link	70	VOLKSWAGEN
10159 Trag-/Führungsgelenk / Support-/ Steering Link	168 169 171	VOLKSWAGEN
10160 Trag-/Führungsgelenk / Support-/ Steering Link	9 21 161	VOLKSWAGEN
10161 Trag-/Führungsgelenk / Support-/ Steering Link	11 17 25 32 37 43 51 64 104 112 150 152 200	VOLKSWAGEN
10162 Trag-/Führungsgelenk / Support-/ Steering Link	168 169 171	VOLKSWAGEN
10163 Trag-/Führungsgelenk / Support-/ Steering Link	72 74 76 77 78	VOLKSWAGEN
10164 Trag-/Führungsgelenk / Support-/ Steering Link	177 184 191	VOLKSWAGEN
10165 Lenker, Radaufhängung / Track Control Arm	9 20 161	VOLKSWAGEN
10166 Trag-/Führungsgelenk / Support-/ Steering Link	70	VOLKSWAGEN
10167 Trag-/Führungsgelenk / Support-/ Steering Link	71	VOLKSWAGEN
10168 Trag-/Führungsgelenk / Support-/ Steering Link	71	VOLKSWAGEN
10169 Trag-/Führungsgelenk / Support-/ Steering Link	25 64	VOLKSWAGEN
10171 Trag-/Führungsgelenk / Support-/ Steering Link	17 33 43 104 112 200	VOLKSWAGEN
10172 Lenker, Radaufhängung / Track Control Arm	11 17 25 63 150 152	VOLKSWAGEN
10174 Lagerung, Lenker / Mounting, wishbone	168 170 171	VOLKSWAGEN
10175 Lagerung, Lenker / Mounting, wishbone	72 74 76 77 78	VOLKSWAGEN
10193 Achskörperlager / Mounting, axle body	93 95 98	VOLKSWAGEN
10194 Achskörperlager / Mounting, axle body	106 114	VOLKSWAGEN
10196 Achskörperlager / Mounting, axle body	18 28 66	VOLKSWAGEN
10197 Achskörperlager / Mounting, axle body	169 170 172	VOLKSWAGEN
10202 Lagerung, Lenker / Mounting, wishbone	9 21 161	VOLKSWAGEN
10203 Lagerung, Lenker / Mounting, wishbone	3 6 6 11 11 17 17 26 33 37 43 43 49 51 51 55 55 64 88 89 105	VOLKSWAGEN

Arithmetische Liste / Part number list

Artikelnummer Article No.	Seite Page	Hersteller Manufacturer
10205 Lagerung, Lenker / Mounting, wishbone	11 11 17 17 26 33 37 43 52 64 105 113 150 150 152 152 200 200	VOLKSWAGEN
10206 Lagerung, Lenker / Mounting, wishbone	138 140 141	VOLKSWAGEN
10207 Stabilisatorlager / Mounting, Stabilizer	73 74 76 77 78	VOLKSWAGEN
10208 Stabilisatorlager / Mounting, Stabilizer	73 75 76 78	VOLKSWAGEN
10209 Lagerung, Lenker / Mounting, wishbone	168 170 171	VOLKSWAGEN
10222 Achskörperlager / Mounting, axle body	18 34 37 52 201	VOLKSWAGEN
10247 Spurstange / Tie Rod, steering	71 73 75	VOLKSWAGEN
10248 Spurstange / Tie Rod, steering	22 61	VOLKSWAGEN
10249 Spurstangenkopf / Tie-rod End	17 23 23 31 36 40 62 62 102 110 149 199	VOLKSWAGEN
10250 Spurstangenkopf / Tie-rod End	17 24 31 36 41 62 102 110 149 199	VOLKSWAGEN
10251 Spurstangenkopf / Tie-rod End	8 20 160 168 169 171	VOLKSWAGEN
10252 Spurstangenkopf / Tie-rod End	69	VOLKSWAGEN
10253 Spurstange / Tie Rod, steering	16 22 61	VOLKSWAGEN
10254 Spurstange / Tie Rod, steering	16 23 61	VOLKSWAGEN
10255 Spurstange / Tie Rod, steering	99 107	VOLKSWAGEN
10256 Spurstange / Tie Rod, steering	99 107	VOLKSWAGEN
10257 Spurstange / Tie Rod, steering	23 29 35 38 197	VOLKSWAGEN
10258 Spurstange / Tie Rod, steering	23 29 35 38 197	VOLKSWAGEN
10259 LHD Lenkstange / Centre Rod	77 78	VOLKSWAGEN
10261 Axialgelenk, Spurstange / Axial Rod, tie rod	31 36 42 51 51 199	VOLKSWAGEN
10262 Spurstange / Tie Rod, steering	29 197	VOLKSWAGEN
10263 Spurstange / Tie Rod, steering	29 197	VOLKSWAGEN
10264 Spurstange / Tie Rod, steering	99 107	VOLKSWAGEN
10265 Spurstangenkopf / Tie-rod End	69	VOLKSWAGEN
10266 Spurstange / Tie Rod, steering	8 20 160	VOLKSWAGEN
10267 Spurstange / Tie Rod, steering	68	VOLKSWAGEN
10268 Spurstange / Tie Rod, steering	30 35 38 198	VOLKSWAGEN
10269 Spurstange / Tie Rod, steering	30 35 38 198	VOLKSWAGEN
10270 Spurstange / Tie Rod, steering	167 169 170	VOLKSWAGEN
10271 Spurstange / Tie Rod, steering	23 62	VOLKSWAGEN
10272 Axialgelenk, Spurstange / Axial Rod, tie rod	168 169 171	VOLKSWAGEN
10273 Spurstange / Tie Rod, steering	71 73 75	VOLKSWAGEN
10274 Spurstangenkopf / Tie-rod End	175 182 188	VOLKSWAGEN
10275 Spurstangenkopf / Tie-rod End	175 182 189	VOLKSWAGEN
10276 Spurstange / Tie Rod, steering	72 73 75	VOLKSWAGEN
10277 Axialgelenk, Spurstange / Axial Rod, tie rod	24 63	VOLKSWAGEN
10278 Spurstange / Tie Rod, steering	172 179 186	VOLKSWAGEN
10279 Spurstangenkopf / Tie-rod End	72 73 75	VOLKSWAGEN
10280 Spurstangenkopf / Tie-rod End	72 73 75	VOLKSWAGEN
10281 Lenkstange / Centre Rod	72 74 76	VOLKSWAGEN
10282 Axialgelenk, Spurstange / Axial Rod, tie rod	8 20 160	VOLKSWAGEN

Artikelnummer Article No.	Seite Page	Hersteller Manufacturer
10283 RHD **Spurstange / Tie Rod, steering**	137 138 140 141	**VOLKSWAGEN**
10284 **Spurstangenkopf / Tie-rod End**	175 182 189	**VOLKSWAGEN**
10285 **Axialgelenk, Spurstange / Axial Rod, tie rod**	176 183 190	**VOLKSWAGEN**
10286 **Spurstangenkopf / Tie-rod End**	175 182 189	**VOLKSWAGEN**
10287 **Spurstange / Tie Rod, steering**	172 180 186	**VOLKSWAGEN**
10288 **Spurstange / Tie Rod, steering**	100 108	**VOLKSWAGEN**
10289 LHD **Spurstange / Tie Rod, steering**	173 180 186	**VOLKSWAGEN**
10290 LHD **Spurstange / Tie Rod, steering**	173 180 187	**VOLKSWAGEN**
10291 LHD **Spurstange / Tie Rod, steering**	173 180 187	**VOLKSWAGEN**
10292 **Spurstange / Tie Rod, steering**	100 108	**VOLKSWAGEN**
10293 **Spurstange / Tie Rod, steering**	100 108	**VOLKSWAGEN**
10294 **Spurstange / Tie Rod, steering**	30 30 39 39 198 198	**VOLKSWAGEN**
10295 **Spurstange / Tie Rod, steering**	30 30 39 39 198 198	**VOLKSWAGEN**
10296 **Axialgelenk, Spurstange / Axial Rod, tie rod**	103 111	**VOLKSWAGEN**
11096 ▲ **Spurstange / Tie Rod, steering**	16	**VOLKSWAGEN**
11902 **Trag-/Führungsgelenk / Support-/ Steering Link**	164	**VOLKSWAGEN**
11907 **Spurstangenkopf / Tie-rod End**	164	**VOLKSWAGEN**
11908 **Spurstangenkopf / Tie-rod End**	164	**VOLKSWAGEN**
13673 **Lenker, Radaufhängung / Track Control Arm**	116 122 128 130	**VOLKSWAGEN**
13676 **Lenker, Radaufhängung / Track Control Arm**	116 122 128 130	**VOLKSWAGEN**
13677 **Lenker, Radaufhängung / Track Control Arm**	116 123 128 130	**VOLKSWAGEN**
13678 **Spurstange / Tie Rod, steering**	115 121 127 130	**VOLKSWAGEN**
13719 **Lenker, Radaufhängung / Track Control Arm**	117 123 128 130	**VOLKSWAGEN**
13720 **Lenker, Radaufhängung / Track Control Arm**	117 123 128 131	**VOLKSWAGEN**
13755 ▲ RHD **Spurstange / Tie Rod, steering**	91 94 96	**VOLKSWAGEN**
13759 ▲ RHD **Spurstange / Tie Rod, steering**	137 139	**VOLKSWAGEN**
13760 **Stabilisatorlager / Mounting, Stabilizer**	93 94 98	**VOLKSWAGEN**
13764 **Axialgelenk, Spurstange / Axial Rod, tie rod**	32 42 199	**VOLKSWAGEN**
13768 **Axialgelenk, Spurstange / Axial Rod, tie rod**	32 36 42 199	**VOLKSWAGEN**
13769 **Axialgelenk, Spurstange / Axial Rod, tie rod**	104 112	**VOLKSWAGEN**
13770 **Axialgelenk, Spurstange / Axial Rod, tie rod**	177 183 190	**VOLKSWAGEN**
13771 **Axialgelenk, Spurstange / Axial Rod, tie rod**	32 199	**VOLKSWAGEN**
13772 **Spurstangenkopf / Tie-rod End**	69	**VOLKSWAGEN**
13774 ▲ **Spurstange / Tie Rod, steering**	68	**VOLKSWAGEN**
13776 **Spurstangenkopf / Tie-rod End**	69	**VOLKSWAGEN**
13777 **Spurstange / Tie Rod, steering**	68	**VOLKSWAGEN**
13779 ▲ **Trag-/Führungsgelenk / Support-/ Steering Link**	161	**VOLKSWAGEN**
13784 **Trag-/Führungsgelenk / Support-/ Steering Link**	168 169 171	**VOLKSWAGEN**
13785 **Spurstangenkopf / Tie-rod End**	72 74 75	**VOLKSWAGEN**

Arithmetische Liste / Part number list

Artikelnummer Article No.	Seite Page	Hersteller Manufacturer
13786 Spurstangenkopf / Tie-rod End	72 74 76	VOLKSWAGEN
13787 Spurstangenkopf / Tie-rod End	72 74 76	VOLKSWAGEN
13789 Spurstangenkopf / Tie-rod End	70	VOLKSWAGEN
13790 Trag-/Führungsgelenk / Support-/ Steering Link	83 144 147 154	VOLKSWAGEN
13791 Trag-/Führungsgelenk / Support-/ Steering Link	84 145 147 154	VOLKSWAGEN
13792 Spurstangenkopf / Tie-rod End	83 143 143 147 153	VOLKSWAGEN
13793 Spurstangenkopf / Tie-rod End	83 144 147 153	VOLKSWAGEN
13794 Spurstangenkopf / Tie-rod End	175 182 189	VOLKSWAGEN
13795 Spurstange / Tie Rod, steering	173 180 187	VOLKSWAGEN
13796 RHD Spurstange / Tie Rod, steering	173 180 187	VOLKSWAGEN
13797 Spurstange / Tie Rod, steering	139	VOLKSWAGEN
13798 LHD RHD Spurstange / Tie Rod, steering	137 139 140 141	VOLKSWAGEN
14142 RHD Spurstange / Tie Rod, steering	100 108	VOLKSWAGEN
14278 Spurstange / Tie Rod, steering	162	VOLKSWAGEN
14279 Spurstange / Tie Rod, steering	162	VOLKSWAGEN
14313 Gelenk, Lenkwelle / Joint, steering shaft	168 170 171	VOLKSWAGEN
14320 Lagerung, Lenker / Mounting, wishbone	71	VOLKSWAGEN
14341 Stabilisatorlager / Mounting, Stabilizer	11 18 26 43 65 150 152 201	VOLKSWAGEN
14378 Stabilisatorlager / Mounting, Stabilizer	168 170 171	VOLKSWAGEN
14383 Lagerung, Lenker / Mounting, wishbone	73 74 76	VOLKSWAGEN
14466 Lenker, Radaufhängung / Track Control Arm	32 36 43 51 200	VOLKSWAGEN
14493 LHD Spurstange / Tie Rod, steering	101 109	VOLKSWAGEN
14496 Spurstangenkopf / Tie-rod End	77	VOLKSWAGEN
14498 Spurstange / Tie Rod, steering	101 109	VOLKSWAGEN
14540 Lagerung, Lenker / Mounting, wishbone	118 124 129 131	VOLKSWAGEN
14541 Lagerung, Lenker / Mounting, wishbone	118 125 129 131	VOLKSWAGEN
14545 Spurstange / Tie Rod, steering	142 146	VOLKSWAGEN
14546 Spurstange / Tie Rod, steering	142 146	VOLKSWAGEN
14547 LHD Spurstange / Tie Rod, steering	173 180 187	VOLKSWAGEN
14548 LHD Spurstange / Tie Rod, steering	173 181 187	VOLKSWAGEN
14549 Spurstangenkopf / Tie-rod End	176 182 189	VOLKSWAGEN
14554 Lagerung, Lenker / Mounting, wishbone	177 184 191	VOLKSWAGEN
14555 Lagerung, Lenker / Mounting, wishbone	178 184 191	VOLKSWAGEN
14556 Lagerung, Lenker / Mounting, wishbone	178 184 191	VOLKSWAGEN
14570 Spurstange / Tie Rod, steering	174 181 187	VOLKSWAGEN
14571 Trag-/Führungsgelenk / Support-/ Steering Link	177 184 191	VOLKSWAGEN
14816 Reparatursatz, Spurstange / Repair Kit, tie rod	30 39 198	VOLKSWAGEN
15669 Trag-/Führungsgelenk / Support-/ Steering Link	12	VOLKSWAGEN
15670 Spurstangenkopf / Tie-rod End	12	VOLKSWAGEN
15717 Trag-/Führungsgelenk / Support-/ Steering Link	164	VOLKSWAGEN
15761 RHD Spurstange / Tie Rod, steering	174 181 188	VOLKSWAGEN
15762 Spurstangenkopf / Tie-rod End	102 110	VOLKSWAGEN

Artikelnummer Article No.	Seite Page	Hersteller Manufacturer
16426 Trag-/Führungsgelenk / Support-/ Steering Link	164	VOLKSWAGEN
16431 Trag-/Führungsgelenk / Support-/ Steering Link	164	VOLKSWAGEN
16607 Trag-/Führungsgelenk / Support-/ Steering Link	71	VOLKSWAGEN
16610 Trag-/Führungsgelenk / Support-/ Steering Link	163	VOLKSWAGEN
16612 Stabilisatorlager / Mounting, Stabilizer	78	VOLKSWAGEN
16619 Spurstangenkopf / Tie-rod End	70	VOLKSWAGEN
16620 Spurstangenkopf / Tie-rod End	70	VOLKSWAGEN
16628 Spurstange / Tie Rod, steering	137 139	VOLKSWAGEN
16629 Spurstange / Tie Rod, steering	137 139 140 141	VOLKSWAGEN
16630 Spurstange / Tie Rod, steering	174 181 188	VOLKSWAGEN
16638 Spurstangenkopf / Tie-rod End	162	VOLKSWAGEN
16784 Spurstangenkopf / Tie-rod End	162	VOLKSWAGEN
17355 Lagerung, Lenker / Mounting, wishbone	84 145 148 154 154	VOLKSWAGEN
17400 Lagerung, Stabilisatorkoppelstange Mounting, stabilizer coupling rod	11 18 27 37 52 66 150	VOLKSWAGEN
17619 Trag-/Führungsgelenk / Support-/ Steering Link	2 6 48 55 87 89	VOLKSWAGEN
17620 Trag-/Führungsgelenk / Support-/ Steering Link	3 6 49 55 88 89	VOLKSWAGEN
17621 Spurstange / Tie Rod, steering	45 86	VOLKSWAGEN
17622 Spurstange / Tie Rod, steering	45 86	VOLKSWAGEN
17623 Spurstangenkopf / Tie-rod End	31 46 86 86	VOLKSWAGEN
17624 Spurstangenkopf / Tie-rod End	31 46 86 86	VOLKSWAGEN
17635 Lagerbuchse, Stabilisator / Bushing, stabilizer	105 113	VOLKSWAGEN
17642 Spurstangenkopf / Tie-rod End	1 1 5 5 10 36 41 46 46 51 51 53 53 103 111 149 151	VOLKSWAGEN
17659 Lagerung, Lenker / Mounting, wishbone	118 125 129 131	VOLKSWAGEN
17661 Lagerung, Lenker / Mounting, wishbone	118 125	VOLKSWAGEN
17673 Spurstange / Tie Rod, steering	174 181 188	VOLKSWAGEN
17674 Spurstangenkopf / Tie-rod End	176 182 189	VOLKSWAGEN
17675 Spurstangenkopf / Tie-rod End	176 183 190	VOLKSWAGEN
17679 Spurstange / Tie Rod, steering	175 181 188	VOLKSWAGEN
17681 Lagerung, Lenker / Mounting, wishbone	178 184 191	VOLKSWAGEN
17682 Stabilisatorlager / Mounting, Stabilizer	178 185 192	VOLKSWAGEN
17683 Lagerung, Lenker / Mounting, wishbone	163	VOLKSWAGEN
18047 Stange/Strebe, Stabilisator / Rod/Strut, stabiliser	163	VOLKSWAGEN
18373 Spurstangenkopf / Tie-rod End	1 1 5 5 10 36 42 47 51 51 54 103 111 149 151	VOLKSWAGEN
18374 Spurstangenkopf / Tie-rod End	103 109	VOLKSWAGEN
18875 Trag-/Führungsgelenk / Support-/ Steering Link	79 80 81	VOLKSWAGEN
18876 Axialgelenk, Spurstange / Axial Rod, tie rod	79 79 80 80 81 81	VOLKSWAGEN
19129 Stabilisatorlager / Mounting, Stabilizer	178 185 192	VOLKSWAGEN
19719 Spurstangenkopf / Tie-rod End	79 79 80 80 81 81	VOLKSWAGEN
20962 Spurstange / Tie Rod, steering	101 109	VOLKSWAGEN

Arithmetische Liste / Part number list

Artikelnummer Article No.	Seite Page	Hersteller Manufacturer
20963 Spurstange / Tie Rod, steering	101 109	VOLKSWAGEN
20965 Stabilisatorlager / Mounting, Stabilizer	81 82	VOLKSWAGEN
20982 Stange/Strebe, Stabilisator / Rod/Strut, stabiliser	18 33 201	VOLKSWAGEN
21029 Lenker, Radaufhängung / Track Control Arm	117 124 128 131	VOLKSWAGEN
21030 Lenker, Radaufhängung / Track Control Arm	118 124 128 131	VOLKSWAGEN
21044 Stange/Strebe, Stabilisator / Rod/Strut, stabiliser	178 185 192	VOLKSWAGEN
21113 Lagerung, Lenker / Mounting, wishbone	3 6 6 49 55 55 88 90	VOLKSWAGEN
21169 Spurstange / Tie Rod, steering	82	VOLKSWAGEN
21170 Spurstange / Tie Rod, steering	82	VOLKSWAGEN
21236 Achskörperlager / Mounting, axle body	4 8 19 50 57 88 90 157 159	VOLKSWAGEN
21304 Stabilisatorlager / Mounting, Stabilizer	120	VOLKSWAGEN
21413 Lagerung, Lenker / Mounting, wishbone	84 145 148 154	VOLKSWAGEN
21419 Achskörperlager / Mounting, axle body	44	VOLKSWAGEN
21549 Achskörperlager / Mounting, axle body	84 145 151 152	VOLKSWAGEN
21554 Stange/Strebe, Stabilisator / Rod/Strut, stabiliser	119 126 129 131	VOLKSWAGEN
21555 Stange/Strebe, Stabilisator / Rod/Strut, stabiliser	120 126 129 131	VOLKSWAGEN
21607 Spurstange / Tie Rod, steering	86	VOLKSWAGEN
21608 Spurstange / Tie Rod, steering	86	VOLKSWAGEN
21609 Axialgelenk, Spurstange / Axial Rod, tie rod	115 115 122 128 130 130	VOLKSWAGEN
21610 Spurstangenkopf / Tie-rod End	47 87	VOLKSWAGEN
21611 Spurstangenkopf / Tie-rod End	47 87	VOLKSWAGEN
21683 (x2) Stange/Strebe, Stabilisator / Rod/Strut, stabiliser	4 7 50 56 88	VOLKSWAGEN
21697	86	VOLKSWAGEN
21698 (x2) Stange/Strebe, Stabilisator / Rod/Strut, stabiliser	4 7 50 56	VOLKSWAGEN
21699 (x2) Stange/Strebe, Stabilisator / Rod/Strut, stabiliser	3 7 43 49 55 88 90	VOLKSWAGEN
21855 Spurstange / Tie Rod, steering	1 4 45 53 86 89	VOLKSWAGEN
21856 Spurstange / Tie Rod, steering	1 5 46 53 86 89	VOLKSWAGEN
22250 Axialgelenk, Spurstange / Axial Rod, tie rod	2 6 48 54 87 89	VOLKSWAGEN
22251 Spurstangenkopf / Tie-rod End	2 5 5 47 54 87 89	VOLKSWAGEN
22252 Spurstangenkopf / Tie-rod End	2 5 47 54 87 89	VOLKSWAGEN
22282 Axialgelenk, Spurstange / Axial Rod, tie rod	32 42 48 86 200	VOLKSWAGEN
22304 Stabilisatorlager / Mounting, Stabilizer	120 127	VOLKSWAGEN
22307 Axialgelenk, Spurstange / Axial Rod, tie rod	177 183 190	VOLKSWAGEN
22313 LHD Lenkstange / Centre Rod	77	VOLKSWAGEN
22451 Spurstange / Tie Rod, steering	39 51	VOLKSWAGEN
22452 Spurstange / Tie Rod, steering	39 51	VOLKSWAGEN
22475 Lenker, Radaufhängung / Track Control Arm	2 6 48 55 87	VOLKSWAGEN
22569 Lenker, Radaufhängung / Track Control Arm	144 147	VOLKSWAGEN
24544 Spurstange / Tie Rod, steering	142	VOLKSWAGEN
24545 Spurstange / Tie Rod, steering	142	VOLKSWAGEN

Artikelnummer Article No.	Seite Page	Hersteller Manufacturer
24546 Spurstange / Tie Rod, steering	143 146	VOLKSWAGEN
24547 Spurstange / Tie Rod, steering	143 146	VOLKSWAGEN
24637 (x2) Stange/Strebe, Stabilisator / Rod/Strut, stabiliser	121 127	VOLKSWAGEN
24739 Spurstangenkopf / Tie-rod End	83 142 147 149 151 153	VOLKSWAGEN
24740 Spurstangenkopf / Tie-rod End	83 142 147 149 151 153	VOLKSWAGEN
24802 Spurstange / Tie Rod, steering	143 146	VOLKSWAGEN
24803 Spurstange / Tie Rod, steering	143 146	VOLKSWAGEN
25056 Axialgelenk, Spurstange / Axial Rod, tie rod	144	VOLKSWAGEN
25057 Axialgelenk, Spurstange / Axial Rod, tie rod	144 146	VOLKSWAGEN
25058 Axialgelenk, Spurstange / Axial Rod, tie rod	83 153 153 156	VOLKSWAGEN
25059 Spurstange / Tie Rod, steering	82 153	VOLKSWAGEN
25060 Spurstange / Tie Rod, steering	82 153	VOLKSWAGEN
25291 Lagerung, Lenker / Mounting, wishbone	163 163	VOLKSWAGEN
25295 Axialgelenk, Spurstange / Axial Rod, tie rod	104 112	VOLKSWAGEN
25325 Spurstangenkopf / Tie-rod End	12 57 67 133	VOLKSWAGEN
25326 Spurstangenkopf / Tie-rod End	12 58 67 133	VOLKSWAGEN
25327 Spurstangenkopf / Tie-rod End	14 15 132 166	VOLKSWAGEN
25328 Spurstangenkopf / Tie-rod End	14 15 132 166	VOLKSWAGEN
25329 Axialgelenk, Spurstange / Axial Rod, tie rod	12 14 15 58 67 132 133 166	VOLKSWAGEN
25332 Spurstange / Tie Rod, steering	135	VOLKSWAGEN
25336 Spurstangenkopf / Tie-rod End	135 135	VOLKSWAGEN
25341 Spurstangenkopf / Tie-rod End	165 165	VOLKSWAGEN
25342 Spurstangenkopf / Tie-rod End	165 165	VOLKSWAGEN
25343 Axialgelenk, Spurstange / Axial Rod, tie rod	165 165	VOLKSWAGEN
25352 Lagerung, Lenker / Mounting, wishbone	11 17 26 33 37 52 65 105 113 150 152 200	VOLKSWAGEN
25463 Stange/Strebe, Stabilisator / Rod/Strut, stabiliser	19 157 158	VOLKSWAGEN
25524 Trag-/Führungsgelenk / Support-/ Steering Link	19 157 158	VOLKSWAGEN
25525 Trag-/Führungsgelenk / Support-/ Steering Link	19 157 158	VOLKSWAGEN
25614 Axialgelenk, Spurstange / Axial Rod, tie rod	135 135	VOLKSWAGEN
25617 Axialgelenk, Spurstange / Axial Rod, tie rod	24 63	VOLKSWAGEN
25800 Stange/Strebe, Stabilisator / Rod/Strut, stabiliser	79 80 81	VOLKSWAGEN
25801 Stange/Strebe, Stabilisator / Rod/Strut, stabiliser	79 80 82	VOLKSWAGEN
25802 Stange/Strebe, Stabilisator / Rod/Strut, stabiliser	79 80 82	VOLKSWAGEN
25863 Spurstangenkopf / Tie-rod End	115 115 121 121 128 130 130	VOLKSWAGEN
25885 Stange/Strebe, Stabilisator / Rod/Strut, stabiliser	3 7 49 56	VOLKSWAGEN
25886 Stange/Strebe, Stabilisator / Rod/Strut, stabiliser	3 7 50 56	VOLKSWAGEN
25909 Lagerung, Lenker / Mounting, wishbone	119 125 129 131 131	VOLKSWAGEN
25931 Lagerung, Lenker / Mounting, wishbone	178 185 192	VOLKSWAGEN

Arithmetische Liste / Part number list

Artikelnummer Article No.	Seite Page	Hersteller Manufacturer
25947 Lagerbock, Achskörper / Bracket, axle body	129 132	VOLKSWAGEN
25948 Lagerbock, Achskörper / Bracket, axle body	129 132	VOLKSWAGEN
25962 Spurstange / Tie Rod, steering	46	VOLKSWAGEN
25963 Spurstange / Tie Rod, steering	46	VOLKSWAGEN
25964 Axialgelenk, Spurstange / Axial Rod, tie rod	48	VOLKSWAGEN
26050 Stange/Strebe, Stabilisator / Rod/Strut, stabiliser	165	VOLKSWAGEN
26051 Stange/Strebe, Stabilisator / Rod/Strut, stabiliser	166	VOLKSWAGEN
26091 Achskörperlager / Mounting, axle body	163	VOLKSWAGEN
26572 Achsträgerlager / Mounting, axle bracket	179 185 192	VOLKSWAGEN
26606 Lagerung, Lenker / Mounting, wishbone	49 88	VOLKSWAGEN
26669 Spurstangenkopf / Tie-rod End	19 156 156 158	VOLKSWAGEN
26670 Spurstangenkopf / Tie-rod End	19 156 156	VOLKSWAGEN
26671 Axialgelenk, Spurstange / Axial Rod, tie rod	19 156 156 158	VOLKSWAGEN
26704 Stange/Strebe, Stabilisator / Rod/Strut, stabiliser	84	VOLKSWAGEN
26740 Lenker, Radaufhängung / Track Control Arm	157	VOLKSWAGEN
26772 Trag-/Führungsgelenk / Support-/ Steering Link	13 14 15 58 67 166	VOLKSWAGEN
26773 Trag-/Führungsgelenk / Support-/ Steering Link	13 14 15 58 67 166	VOLKSWAGEN
26774 Stange/Strebe, Stabilisator / Rod/Strut, stabiliser	13 14 16 58 67 132 134 166	VOLKSWAGEN
26775 Stange/Strebe, Stabilisator / Rod/Strut, stabiliser	13 60 68 133 134 167	VOLKSWAGEN
26803 Stange/Strebe, Stabilisator / Rod/Strut, stabiliser	136	VOLKSWAGEN
26804 Stange/Strebe, Stabilisator / Rod/Strut, stabiliser	136	VOLKSWAGEN
26820 Achskörperlager / Mounting, axle body	151 152 154	VOLKSWAGEN
26935 Lagerung, Lenker / Mounting, wishbone	193 195 196	VOLKSWAGEN
26936 Lagerung, Lenker / Mounting, wishbone	85 194 195 196	VOLKSWAGEN
26937 Lagerung, Lenker / Mounting, wishbone	85 194 195 196	VOLKSWAGEN
27026 (x2) Stange/Strebe, Stabilisator / Rod/Strut, stabiliser	136	VOLKSWAGEN
27027 Lenker, Radaufhängung / Track Control Arm	135	VOLKSWAGEN
27028 Lenker, Radaufhängung / Track Control Arm	135	VOLKSWAGEN
27029 Lenker, Radaufhängung / Track Control Arm	135	VOLKSWAGEN
27030 Lenker, Radaufhängung / Track Control Arm	135	VOLKSWAGEN
27077	135	VOLKSWAGEN
27078 Spurstangenkopf / Tie-rod End	10 149 151	VOLKSWAGEN
27079 Spurstangenkopf / Tie-rod End	10 150 152	VOLKSWAGEN
27132 Lagerung, Lenker / Mounting, wishbone	49 88	VOLKSWAGEN
27146 Lenker, Radaufhängung / Track Control Arm	135	VOLKSWAGEN
27147 Lenker, Radaufhängung / Track Control Arm	135	VOLKSWAGEN
27148 Lagerung, Lenker / Mounting, wishbone	136	VOLKSWAGEN
27306 Lagerung, Lenker / Mounting, wishbone	59 60 167	VOLKSWAGEN

Artikelnummer Article No.	Seite Page	Hersteller Manufacturer
27319 Axialgelenk, Spurstange / Axial Rod, tie rod	83 83 154	VOLKSWAGEN
27320 Axialgelenk, Spurstange / Axial Rod, tie rod	83 156	VOLKSWAGEN
27321 Axialgelenk, Spurstange / Axial Rod, tie rod	157	VOLKSWAGEN
27421 Reparatursatz, Querlenker / Repair Kit, wishbone arm	119 126 129 131	VOLKSWAGEN
27438 Stabilisatorlager / Mounting, Stabilizer	106 114	VOLKSWAGEN
27461 Stabilisatorlager / Mounting, Stabilizer	11 27 34 44 65 150 152 201	VOLKSWAGEN
27594 Spurstangenkopf / Tie-rod End	85 85 193 193 194 194 195 195	VOLKSWAGEN
27595 Spurstangenkopf / Tie-rod End	85 85 193 193 194 194 196	VOLKSWAGEN
27596 Axialgelenk, Spurstange / Axial Rod, tie rod	85 85 193 193 194 194 196	VOLKSWAGEN
27597 Trag-/Führungsgelenk / Support-/ Steering Link	85 193 194 196	VOLKSWAGEN
27598 Trag-/Führungsgelenk / Support-/ Steering Link	193 195 196	VOLKSWAGEN
27627 Achskörperlager / Mounting, axle body	4 8 50 57 89 90 158 159	VOLKSWAGEN
27635 Spurstange / Tie Rod, steering	83 153	VOLKSWAGEN
27636 Spurstange / Tie Rod, steering	83 153	VOLKSWAGEN
27639 Spurstange / Tie Rod, steering	155	VOLKSWAGEN
27640 Spurstange / Tie Rod, steering	155	VOLKSWAGEN
27641 Spurstange / Tie Rod, steering	155	VOLKSWAGEN
27642 Spurstange / Tie Rod, steering	155	VOLKSWAGEN
27643 Spurstange / Tie Rod, steering	155	VOLKSWAGEN
27644 Spurstange / Tie Rod, steering	156	VOLKSWAGEN
27645 Spurstange / Tie Rod, steering	18 156 158	VOLKSWAGEN
27646 Spurstange / Tie Rod, steering	18 156	VOLKSWAGEN
27657 Spurstange / Tie Rod, steering	101 109	VOLKSWAGEN
27680 Achskörperlager / Mounting, axle body	18 28 67	VOLKSWAGEN
27681 Achskörperlager / Mounting, axle body	18 35 37 52 202	VOLKSWAGEN
27682 Achskörperlager / Mounting, axle body	106 114	VOLKSWAGEN
27707 Lenker, Radaufhängung / Track Control Arm	162	VOLKSWAGEN
27708 Lenker, Radaufhängung / Track Control Arm	163	VOLKSWAGEN
27745 Lenker, Radaufhängung / Track Control Arm	83 154	VOLKSWAGEN
27746 Lenker, Radaufhängung / Track Control Arm	104 112	VOLKSWAGEN
27756 Spurstange / Tie Rod, steering	79 80 81	VOLKSWAGEN
27872 Stange/Strebe, Stabilisator / Rod/Strut, stabiliser	15 16	VOLKSWAGEN
27986 Spurstange / Tie Rod, steering	85 193 194 195	VOLKSWAGEN
27987 Spurstange / Tie Rod, steering	85 193 194 195	VOLKSWAGEN
28360 Trag-/Führungsgelenk / Support-/ Steering Link	49 88	VOLKSWAGEN
28450 Spurstange / Tie Rod, steering	9	VOLKSWAGEN
28451 Spurstange / Tie Rod, steering	9	VOLKSWAGEN
28644 Lenker, Radaufhängung / Track Control Arm	19 157 158	VOLKSWAGEN
28648 Axialgelenk, Spurstange / Axial Rod, tie rod	162	VOLKSWAGEN
28978 Spurstange / Tie Rod, steering	83	VOLKSWAGEN

Arithmetische Liste / Part number list

Artikelnummer Article No.	Seite Page	Hersteller Manufacturer
28979 Spurstange / Tie Rod, steering	83	VOLKSWAGEN
28982 Axialgelenk, Spurstange / Axial Rod, tie rod	144 147	VOLKSWAGEN
29314 Lagerung, Spurstange / Mounting, track rod	13 59 60 67 133 134	VOLKSWAGEN
29611 Axialgelenk, Spurstange / Axial Rod, tie rod	12	VOLKSWAGEN
29709 Lagerung, Lenker / Mounting, wishbone	19 19 157 157 158 158	VOLKSWAGEN
29710 Lagerung, Lenker / Mounting, wishbone	19 157 158	VOLKSWAGEN
29730 Axialgelenk, Spurstange / Axial Rod, tie rod	17 25 63	VOLKSWAGEN
29740 Lenker, Radaufhängung / Track Control Arm	165	VOLKSWAGEN
29741 Lenker, Radaufhängung / Track Control Arm	165	VOLKSWAGEN
29742 Lenker, Radaufhängung / Track Control Arm	165	VOLKSWAGEN
29744 Spurstange / Tie Rod, steering	165	VOLKSWAGEN
29745 Spurstange / Tie Rod, steering	165	VOLKSWAGEN
29746 Spurstange / Tie Rod, steering	1 5 46 53	VOLKSWAGEN
29747 Spurstange / Tie Rod, steering	1 5 46 53	VOLKSWAGEN
29916 Lagerung, Lenker / Mounting, wishbone	13 14 15 58 60 67 132 134 166	VOLKSWAGEN
29917 Lagerung, Lenker / Mounting, wishbone	59 60 167	VOLKSWAGEN
29918 Lagerung, Lenker / Mounting, wishbone	59 60 167	VOLKSWAGEN
29919 Lagerung, Lenker / Mounting, wishbone	59 60 167	VOLKSWAGEN
29920 Lagerung, Lenker / Mounting, wishbone	13 59 60 68 133 134 167	VOLKSWAGEN
29921 Lagerung, Spurstange / Mounting, track rod	13 59 60 68 133 134	VOLKSWAGEN
29998 Trag-/Führungsgelenk / Support-/ Steering Link	132 134	VOLKSWAGEN
29999 Trag-/Führungsgelenk / Support-/ Steering Link	132 134	VOLKSWAGEN
30111 Faltenbalgsatz, Lenkung / Bellow Kit, steering system	12 18 21 28 34 37 44 66 106 114 161 201	VOLKSWAGEN
30117 Faltenbalgsatz, Lenkung / Bellow Kit, steering system	9 21 161	VOLKSWAGEN
30121 Faltenbalgsatz, Lenkung / Bellow Kit, steering system	168 170 171	VOLKSWAGEN
30126 Faltenbalgsatz, Lenkung / Bellow Kit, steering system	28 34 37 44 66 106 114 201	VOLKSWAGEN
30127 Faltenbalgsatz, Lenkung / Bellow Kit, steering system	179 185 192	VOLKSWAGEN
30128 Faltenbalgsatz, Lenkung / Bellow Kit, steering system	93 94 98 159	VOLKSWAGEN
30158 Faltenbalg, Lenkung / Boot, steering system	138 140 141	VOLKSWAGEN
30159 Faltenbalgsatz, Lenkung / Bellow Kit, steering system	120 127	VOLKSWAGEN
30175 Faltenbalgsatz, Lenkung / Bellow Kit, steering system	84 145 148 154	VOLKSWAGEN
30176 Faltenbalgsatz, Lenkung / Bellow Kit, steering system	84 145 148 154	VOLKSWAGEN
30177 Faltenbalgsatz, Lenkung / Bellow Kit, steering system	3 7 50 56 88	VOLKSWAGEN
30178 Faltenbalgsatz, Lenkung / Bellow Kit, steering system	120	VOLKSWAGEN
30192 Faltenbalgsatz, Lenkung / Bellow Kit, steering system	163	VOLKSWAGEN
30235 Faltenbalgsatz, Lenkung / Bellow Kit, steering system	19 84 157	VOLKSWAGEN
30334 Axialgelenk, Spurstange / Axial Rod, tie rod	9	VOLKSWAGEN

Artikelnummer Article No.	Seite Page	Hersteller Manufacturer
30335 Axialgelenk, Spurstange / Axial Rod, tie rod	10 150	VOLKSWAGEN
30336 Spurstange / Tie Rod, steering	9 10 148	VOLKSWAGEN
30337 Spurstange / Tie Rod, steering	9 10 148	VOLKSWAGEN
30341 Spurstange / Tie Rod, steering	148	VOLKSWAGEN
30342 Spurstange / Tie Rod, steering	148	VOLKSWAGEN
30567	143 146	VOLKSWAGEN
30568	143 146	VOLKSWAGEN
30583 Stange/Strebe, Stabilisator / Rod/Strut, stabiliser	165	VOLKSWAGEN

Vergleichsliste / Cross reference list

Vergleichs-Nr. Compare No.	Artikelnummer Article No.
VOLKSWAGEN	
113 415 813 D	13772
131 405 361 F	10167
131 405 371 G	10158
131 415 801 F	13774
131 415 811	16619
131 415 812	13776
131 415 813 E	10265
133 407 183	14320
133 407 361	10168
133 415 801	13777
133 419 804 A	10267
171 407 153 D	10165
171 407 182 D	10202
171 407 365 C	13779
171 407 365 F	10160
171 419 807 A	10282
171 419 812	10251
171 419 832 C/S	30117
191 407 151 B	10172
191 407 181 E	10205
191 407 181 E	25352
191 407 365	10169
191 411 314	14341
191 411 327	17400
191 419 803	10248
191 419 804	10271
191 419 807 A	10277
191 419 811	10250
191 419 812	10249
191 419 812	10249
191 422 803 A	10254
191 422 804 A	10253
191 422 807 A	29730
191 501 541	10196

Vergleichs-Nr. Compare No.	Artikelnummer Article No.
VOLKSWAGEN	
191 501 541	27680
1H0 407 151	14466
1H0 407 365	10171
1H0 411 314	27461
1H0 419 803	10294
1H0 419 803	10294
1H0 419 804	10295
1H0 419 804	10295
1H0 419 807	13764
1H0 422 803	10257
1H0 422 803 A	10262
1H0 422 803 B	10268
1H0 422 803 D	22451
1H0 422 804	10258
1H0 422 804 A	10263
1H0 422 804 B	10269
1H0 422 804 D	22452
1H0 422 807 A	13771
1H0 422 807 D	10261
1H0 422 807 D	10261
1H0 422 831 B	30111
1H0 498 803/804 Z	14816
1H0 501 541 A	10222
1H0 501 541 A	27681
1H9 501 541	21419
1J0 407 151 C	22475
1J0 407 181	21113
1J0 407 365 C	17619
1J0 407 366 C	17620
1J0 411 315 D	25885
1J0 411 315 G	21699
1J0 411 316 D	25886
1J0 422 803 A	17621
1J0 422 803 B	21855

Vergleichs-Nr. Compare No.	Artikelnummer Article No.
VOLKSWAGEN	
1J0 422 803 E	29746
1J0 422 804 A	17622
1J0 422 804 B	21856
1J0 422 804 E	29747
1J0 422 807 A	22282
1J0 422 807 A	22282
1J0 422 807 B	22250
1J0 422 807 B	22250
1J0 422 811 A	17623
1J0 422 811 A	17623
1J0 422 811 B	22252
1J0 422 811 B	22252
1J0 422 812 A	17624
1J0 422 812 A	17624
1J0 422 812 B	22251
1J0 422 812 B	22251
1J0 422 831 B	30177
1J0 501 541 C	21236
1J0 501 541 C	27627
1J0 505 466 B	21683
1J0 505 466 C	21698
1K0 407 182	29916
1K0 407 365 C	26772
1K0 407 366 C	26773
1K0 411 315 D	26774
1K0 423 810 A	25329
1K0 423 811 E	25325
1K0 423 811 G	25327
1K0 423 812 E	25326
1K0 423 812 G	25328
1K0 501 541 C	29314
1K0 505 171 C	29917
1K0 505 203 A	29918
1K0 505 279 A	29919

Vergleichs-Nr. Compare No.	Artikelnummer Article No.
VOLKSWAGEN	
1K0 505 465 K	26775
1K0 505 541 C	29920
1K0 505 543 A	29921
1K0 505 553	27306
251 407 077	10174
251 407 175	14378
251 407 183	10209
251 407 187	10159
251 407 187 C	13784
251 407 361	10162
251 419 417 B	14313
251 419 803	10270
251 419 807 A	10272
251 419 831 A	30121
251 501 131 A	10197
281 407 077	10175
281 407 179	10208
281 407 180	10207
281 407 183 C	14383
281 407 187 B	10157
281 407 361	10163
281 415 303 B	10247
281 415 701 E	10281
281 415 711 A	13785
281 415 801 D	10276
281 415 801 D	10279
281 415 801 D	10280
281 415 802 A	10273
281 415 811	13786
281 415 812	13787
291 411 045	16612
291 415 701 E	10259
291 415 711 D	14496
291 415 711 F	22313
2D0 407 361 A	18875
2D0 411 051	25800
2D0 411 052	25801
2D0 422 803	27756
2D0 422 811	19719
2D0 422 811	19719
2D0 511 329	25802
2D0 511 413 B	20965
2K0 505 465 B	27872
311 415 811 C	13789
311 415 812 C	10252
321 501 541	10193
357 407 151	27746
357 407 182	10203
357 407 365	10161
357 411 313 A	27438
357 411 329	17635
357 419 803	10264
357 419 804	10288
357 422 803	10255
357 422 803 A	10292
357 422 803 D	14498
357 422 804	10256
357 422 804 A	10293
357 422 804 B	14493
357 422 804 C	14142
357 422 807 A	10296

Vergleichs-Nr. Compare No.	Artikelnummer Article No.
VOLKSWAGEN	
357 422 807 C	25617
357 422 807 D	25295
357 422 811	15762
357 422 831 B	30126
3A0 422 803 C	20962
3A0 422 803 D	27657
3A0 422 804 C	20963
3A0 422 811	18373
3A0 422 811	18373
3A0 422 811 A	18374
3A0 422 811 A	18374
3A0 422 812	17642
3A0 422 812	17642
3A0 501 541	10194
3A0 501 541	27682
3C0 407 365 A	29998
3C0 407 366 A	29999
4B0 407 515	25909
4B0 419 801 M	13678
4B0 501 521 E	25947
4B0 501 522 E	25948
4D0 407 151 P	13673
4D0 407 181 H	14540
4D0 407 182 E	14541
4D0 407 183 S	17659
4D0 407 515 C	17661
4D0 411 327 G	21304
4D0 411 327 H	22304
4D0 419 831 D	30178
4D0 422 821 A	21609
4D0 422 821 A	21609
4E0 407 182 C	27148
4E0 407 505 B	27027
4E0 407 506 B	27028
4E0 407 509 B	27029
4E0 407 510 B	27030
4E0 407 693 F	27146
4E0 407 694 F	27147
4E0 419 801 D	25332
4E0 419 811 D	25336
4E0 419 811 D	25336
4E0 419 821	25614
4E0 419 821	25614
4E0 505 465 G	27026
4E0 505 547 B	26803
4E0 505 548 B	26804
4F0 419 811 B	25863
4F0 419 811 B	25863
535 411 315	20982
6E0 411 315	26704
6E0 419 803 A	28978
6E0 419 804 A	28979
6E0 419 811	24739
6E0 419 811	24739
6E0 419 812	24740
6E0 419 812	24740
6E0 419 831	30235
6K0 422 803 D	28450
6K0 422 803 E	30336
6K0 422 803 F	30341
6K0 422 804 D	28451

Vergleichs-Nr. Compare No.	Artikelnummer Article No.
VOLKSWAGEN	
6K0 422 804 E	30337
6K0 422 804 F	30335
6K0 422 804 F	30342
6K0 422 807 D	30334
6K0 422 807 F	30335
6K0 422 811	27078
6K0 422 812	27079
6K0 501 541 A	26820
6N0 407 151 B	22569
6N0 407 181	17355
6N0 407 182	21413
6N0 407 365	13791
6N0 407 365 A	13790
6N0 419 803	14545
6N0 419 804	14546
6N0 419 811	13792
6N0 419 811	13792
6N0 419 812	13793
6N0 419 831	30176
6N0 422 803 A	24802
6N0 422 803 B	24544
6N0 422 803 C	27635
6N0 422 803 D	24546
6N0 422 804 A	24803
6N0 422 804 B	24545
6N0 422 804 C	27636
6N0 422 804 D	24547
6N0 422 807 A	28982
6N0 422 807 B	25056
6N0 422 807 C	27319
6N0 422 807 C	27319
6N0 422 807 D	25057
6N0 422 807 D	25057
6N0 422 831	30175
6N0 501 541 D	21549
6Q0 407 151 E	28644
6Q0 407 182 A	29709
6Q0 407 183 A	29710
6Q0 407 365 A	25524
6Q0 407 366 A	25525
6Q0 411 315 J	25463
6Q0 419 803 D	27639
6Q0 419 804 D	27640
6Q0 419 807 D	27320
6Q0 419 807 D	27320
6Q0 423 803 B	27641
6Q0 423 803 E	27643
6Q0 423 803 G	27645
6Q0 423 804 B	27642
6Q0 423 804 E	27644
6Q0 423 804 G	27646
6Q0 423 810 E	27321
6Q0 423 810 G	26671
6Q0 423 810 G	26671
6Q0 423 811 C	26669
6Q0 423 811 C	26669
6Q0 423 812 C	26670
6Q0 423 812 C	26670
6U0 422 807	29611
6U0 422 811	15670
6X0 407 151 A	27745

VOLKSWAGEN

Vergleichs-Nr. Compare No.	Artikelnummer Article No.
6X0 419 804 A	21170
6X0 422 803	25059
6X0 422 804	25060
6X0 422 807	25058
6X0 422 807	25058
6X0 422 811	30567
6X0 422 812	30568
701 407 077 A	25931
701 407 087	14554
701 407 183	14556
701 407 187 B	10155
701 407 361 B	10164
701 411 041	19129
701 411 049 B	21044
701 419 803 C	10291
701 419 803 D	10289
701 419 803 E	14547
701 419 804 C	10290
701 419 804 D	10278
701 419 804 E	14548
701 419 804 F	17673
701 419 804 F	22307
701 419 810	13770
701 419 810 A	10285
701 419 810 B	22307
701 419 811 A	10286
701 419 811 B	10274
701 419 811 C	14549
701 419 811 E	17674
701 419 812	10284
701 419 812 A	13794
701 419 812 B	10275
701 419 812 D	17675
701 599 381	26572
702 419 803 A	13795
702 419 803 B	10287
702 419 803 C	14570
702 419 803 D	17679
702 419 803 D	22307
702 419 804 A	15761
702 419 804 B	13796
702 419 804 C	16630
7D0 407 140 A	14555
7D0 407 183	17681
7D0 407 361	14571
7D0 411 045	17682
7D0 419 831	30127
7H0 407 182	26935
7H0 407 182 A	26936
7H0 407 183	26937
7H0 407 361	27597
7H0 419 803 D	27987
7H0 419 804 D	27986
7H0 422 817 C	27594
7H0 422 817 C	27594
7H0 422 817 C	27596
7H0 422 817 C	27596
7H0 422 818 C	27595
7H0 422 818 C	27595
7H0 422 818 C	27596
7H0 422 818 C	27596

VOLKSWAGEN

Vergleichs-Nr. Compare No.	Artikelnummer Article No.
7H8 407 361 A	27598
7L0 407 021 A	29740
7L0 407 151 E	29741
7L0 407 152 E	29742
7L0 411 317	30583
7L0 422 803 C	29744
7L0 422 804 C	29745
7L0 422 817 C	25341
7L0 422 817 C	25341
7L0 422 818 C	25342
7L0 422 818 C	25342
7L0 422 821	25343
7L0 422 821	25343
7L0 505 465 B	26050
7L0 505 466 B	26051
7M0 407 151 B	27707
7M0 407 152 B	27708
7M0 407 181 A	17683
7M0 422 831 B	30192
7M0 501 541	25291
7M0 505 221 C	26091
7M3 407 365 A	16610
7M3 411 317 C	18047
7M3 422 803	14278
7M3 422 804	14279
7M3 422 818	16638
7M3 422 818	16784
811 407 181 A	10125
811 419 801 E	10145
811 419 802 J	10142
811 419 802 K	10043
811 419 812	10146
811 419 812	10146
811 419 812 A	10143
811 419 812 A	10143
811 419 831 B	30128
812 419 801 A	13755
823 407 365 E	10153
823 411 313 A	13760
855 407 365 A	10148
855 407 366 A	10151
861 407 151 B	10149
861 407 183	10206
861 419 802 A	16628
861 419 831 B	30158
862 419 802	13759
871 419 801 A	10144
871 419 801 B	13797
871 419 802	13798
871 419 802 A	16629
872 419 802 A	10283
8A0 407 181	10126
8D0 407 515 A	27077
8D0 411 317 D	21554
8D0 411 318 D	21555
8D0 419 831 J	30159
8D0 498 998	27421
8E0 407 505 A	13719
8E0 407 506 A	13720
8E0 407 509 A	21030
8E0 407 510 A	21029

VOLKSWAGEN

Vergleichs-Nr. Compare No.	Artikelnummer Article No.
8E0 407 693 Q	13676
8E0 407 694 K	13677
8E0 505 465 D	24637
8N0 407 181 B	27132
8N0 407 182 A	26606
8N0 407 365 C	28360
8N0 422 803 D	25962
8N0 422 804 D	25963
8N0 422 807 D	25964
8n0 422 804 C	21608
J43 330 392 95	11902
J43 340 392 45	16431
J43 350 390 75	15717
J43 350 390 75	16426
J45 406 391 15	11908

Neuaufnahmen / New to range

Artikelnummer Article No.	Seite Page			Hersteller Manufacturer
10125	92	94	97	**VOLKSWAGEN**
10126	93	94	97	**VOLKSWAGEN**
10160	9	21	161	**VOLKSWAGEN**
10164	177	184	191	**VOLKSWAGEN**
10171	17	33	43	**VOLKSWAGEN**
	104	112	200	
10174	168	170	171	**VOLKSWAGEN**
10175	72	74	76	**VOLKSWAGEN**
	77	78		
10193	93	95	98	**VOLKSWAGEN**
10194	106	114		**VOLKSWAGEN**
10196	18	28	66	**VOLKSWAGEN**
10197	169	170	172	**VOLKSWAGEN**
10202	9	21	161	**VOLKSWAGEN**
10203	3	6	6	**VOLKSWAGEN**
	11	11	17	
	17	26	33	
	37	43	43	
	49	51	51	
	55	55	64	
	88	89	105	
	113	150	152	
	200	200		
10205	11	11	17	**VOLKSWAGEN**
	17	26	33	
	37	43	52	
	64	105	113	
	150	150	152	
	152	200	200	
10206	138	140	141	**VOLKSWAGEN**
10207	73	74	76	**VOLKSWAGEN**
	77	78		
10208	73	75	76	**VOLKSWAGEN**
	78			
10222	18	34	37	**VOLKSWAGEN**
	52	201		
10261	31	36	42	**VOLKSWAGEN**
	51	51	199	
10262	29	197		**VOLKSWAGEN**
10277	24	63		**VOLKSWAGEN**
13673	116	122	128	**VOLKSWAGEN**
	130			
13676	116	122	128	**VOLKSWAGEN**
	130			
13677	116	123	128	**VOLKSWAGEN**
	130			
13678	115	121	127	**VOLKSWAGEN**
	130			
13719	117	123	128	**VOLKSWAGEN**
	130			
13720	117	123	128	**VOLKSWAGEN**
	131			
13760	93	94	98	**VOLKSWAGEN**
13771	32	199		**VOLKSWAGEN**
14313	168	170	171	**VOLKSWAGEN**
14320	71			**VOLKSWAGEN**
14341	11	18	26	**VOLKSWAGEN**
	43	65	150	
	152	201		
14378	168	170	171	**VOLKSWAGEN**
14383	73	74	76	**VOLKSWAGEN**
14540	118	124	129	**VOLKSWAGEN**
	131			

Artikelnummer Article No.	Seite Page			Hersteller Manufacturer
14541	118	125	129	**VOLKSWAGEN**
	131			
14554	177	184	191	**VOLKSWAGEN**
14555	178	184	191	**VOLKSWAGEN**
14556	178	184	191	**VOLKSWAGEN**
14816	30	39	198	**VOLKSWAGEN**
16426	164			**VOLKSWAGEN**
16431	164			**VOLKSWAGEN**
16612	78			**VOLKSWAGEN**
17355	84	145	148	**VOLKSWAGEN**
	154	154		
17400	11	18	27	**VOLKSWAGEN**
	37	52	66	
	150			
17621	45	86		**VOLKSWAGEN**
17622	45	86		**VOLKSWAGEN**
17623	31	46	86	**VOLKSWAGEN**
	86			
17624	31	46	86	**VOLKSWAGEN**
	86			
17635	105	113		**VOLKSWAGEN**
17642	1	1	5	**VOLKSWAGEN**
	5	10	36	
	41	46	46	
	51	51	53	
	53	103	111	
	149	151		
17659	118	125	129	**VOLKSWAGEN**
	131			
17661	118	125		**VOLKSWAGEN**
17681	178	184	191	**VOLKSWAGEN**
17682	178	185	192	**VOLKSWAGEN**
17683	163			**VOLKSWAGEN**
18047	163			**VOLKSWAGEN**
18373	1	1	5	**VOLKSWAGEN**
	5	10	36	
	42	47	51	
	51	54	103	
	111	149	151	
18374	103	109		**VOLKSWAGEN**
19129	178	185	192	**VOLKSWAGEN**
20962	101	109		**VOLKSWAGEN**
20963	101	109		**VOLKSWAGEN**
20965	81	82		**VOLKSWAGEN**
21029	117	124	128	**VOLKSWAGEN**
	131			
21030	118	124	128	**VOLKSWAGEN**
	131			
21113	3	6	6	**VOLKSWAGEN**
	49	55	55	
	88	90		
21236	4	8	19	**VOLKSWAGEN**
	50	57	88	
	90	157	159	
21304	120			**VOLKSWAGEN**
21413	84	145	148	**VOLKSWAGEN**
	154			
21419	44			**VOLKSWAGEN**
21549	84	145	151	**VOLKSWAGEN**
	152			
21607	86			**VOLKSWAGEN**
21608	86			**VOLKSWAGEN**
21697	86			**VOLKSWAGEN**

Artikelnummer Article No.	Seite Page	Hersteller Manufacturer
21855	1 4 45 53 86 89	**VOLKSWAGEN**
21856	1 5 46 53 86 89	**VOLKSWAGEN**
22250	2 6 48 54 87 89	**VOLKSWAGEN**
22251	2 5 5 47 54 87 89	**VOLKSWAGEN**
22252	2 5 47 54 87 89	**VOLKSWAGEN**
22282	32 42 48 86 200	**VOLKSWAGEN**
22304	120 127	**VOLKSWAGEN**
22307	177 183 190	**VOLKSWAGEN**
22451	39 51	**VOLKSWAGEN**
22452	39 51	**VOLKSWAGEN**
22475	2 6 48 55 87	**VOLKSWAGEN**
22569	144 147	**VOLKSWAGEN**
24544	142	**VOLKSWAGEN**
24545	142	**VOLKSWAGEN**
24546	143 146	**VOLKSWAGEN**
24547	143 146	**VOLKSWAGEN**
24637 (x2)	121 127	**VOLKSWAGEN**
24739	83 142 147 149 151 153	**VOLKSWAGEN**
24740	83 142 147 149 151 153	**VOLKSWAGEN**
24802	143 146	**VOLKSWAGEN**
24803	143 146	**VOLKSWAGEN**
25056	144	**VOLKSWAGEN**
25057	144 146	**VOLKSWAGEN**
25058	83 153 153 156	**VOLKSWAGEN**
25059	82 153	**VOLKSWAGEN**
25060	82 153	**VOLKSWAGEN**
25291	163 163	**VOLKSWAGEN**
25295	104 112	**VOLKSWAGEN**
25343	165 165	**VOLKSWAGEN**
25352	11 17 26 33 37 52 65 105 113 150 152 200	**VOLKSWAGEN**
25463	19 157 158	**VOLKSWAGEN**
25524	19 157 158	**VOLKSWAGEN**
25525	19 157 158	**VOLKSWAGEN**
25614	135 135	**VOLKSWAGEN**
25617	24 63	**VOLKSWAGEN**
25800	79 80 81	**VOLKSWAGEN**
25802	79 80 82	**VOLKSWAGEN**
25863	115 115 121 121 128 130 130	**VOLKSWAGEN**
25885	3 7 49 56	**VOLKSWAGEN**
25886	3 7 50 56	**VOLKSWAGEN**
25909	119 125 129 131 131	**VOLKSWAGEN**
25931	178 185 192	**VOLKSWAGEN**
25947	129 132	**VOLKSWAGEN**
25948	129 132	**VOLKSWAGEN**
25964	48	**VOLKSWAGEN**
26050	165	**VOLKSWAGEN**
26051	166	**VOLKSWAGEN**
26091	163	**VOLKSWAGEN**
26572	179 185 192	**VOLKSWAGEN**
26606	49 88	**VOLKSWAGEN**
26669	19 156 156 158	**VOLKSWAGEN**
26670	19 156 156	**VOLKSWAGEN**
26671	19 156 156 158	**VOLKSWAGEN**
26704	84	**VOLKSWAGEN**
26740	157	**VOLKSWAGEN**
26772	13 14 15 58 67 166	**VOLKSWAGEN**
26773	13 14 15 58 67 166	**VOLKSWAGEN**
26774	13 14 16 58 67 132 134 166	**VOLKSWAGEN**
26775	13 60 68 133 134 167	**VOLKSWAGEN**
26803	136	**VOLKSWAGEN**
26804	136	**VOLKSWAGEN**
26820	151 152 154	**VOLKSWAGEN**
26935	193 195 196	**VOLKSWAGEN**
26936	85 194 195 196	**VOLKSWAGEN**
26937	85 194 195 196	**VOLKSWAGEN**
27026 (x2)	136	**VOLKSWAGEN**
27027	135	**VOLKSWAGEN**
27028	135	**VOLKSWAGEN**
27029	135	**VOLKSWAGEN**
27030	135	**VOLKSWAGEN**
27078	10 149 151	**VOLKSWAGEN**
27079	10 150 152	**VOLKSWAGEN**
27132	49 88	**VOLKSWAGEN**
27146	135	**VOLKSWAGEN**
27147	135	**VOLKSWAGEN**
27148	136	**VOLKSWAGEN**
27306	59 60 167	**VOLKSWAGEN**
27319	83 83 154	**VOLKSWAGEN**
27320	83 156	**VOLKSWAGEN**
27321	157	**VOLKSWAGEN**
27421	119 126 129 131	**VOLKSWAGEN**
27438	106 114	**VOLKSWAGEN**
27461	11 27 34 44 65 150 152 201	**VOLKSWAGEN**
27594	85 85 193 193 194 194 195 195	**VOLKSWAGEN**
27595	85 85 193 193 194 194 196	**VOLKSWAGEN**
27596	85 85 193 193 194 194 196	**VOLKSWAGEN**
27597	85 193 194 196	**VOLKSWAGEN**

Neuaufnahmen / New to range

Artikelnummer Article No.	Seite Page	Hersteller Manufacturer
27598	193 195 196	**VOLKSWAGEN**
27627	4 8 50 57 89 90 158 159	**VOLKSWAGEN**
27635	83 153	**VOLKSWAGEN**
27636	83 153	**VOLKSWAGEN**
27639	155	**VOLKSWAGEN**
27640	155	**VOLKSWAGEN**
27641	155	**VOLKSWAGEN**
27642	155	**VOLKSWAGEN**
27643	155	**VOLKSWAGEN**
27644	156	**VOLKSWAGEN**
27645	18 156 158	**VOLKSWAGEN**
27646	18 156	**VOLKSWAGEN**
27657	101 109	**VOLKSWAGEN**
27680	18 28 67	**VOLKSWAGEN**
27681	18 35 37 52 202	**VOLKSWAGEN**
27682	106 114	**VOLKSWAGEN**
27707	162	**VOLKSWAGEN**
27708	163	**VOLKSWAGEN**
27745	83 154	**VOLKSWAGEN**
27746	104 112	**VOLKSWAGEN**
27756	79 80 81	**VOLKSWAGEN**
27872	15 16	**VOLKSWAGEN**
27986	85 193 194 195	**VOLKSWAGEN**
27987	85 193 194 195	**VOLKSWAGEN**
28360	49 88	**VOLKSWAGEN**
28451	9	**VOLKSWAGEN**
28644	19 157 158	**VOLKSWAGEN**
28648	162	**VOLKSWAGEN**
28978	83	**VOLKSWAGEN**
28979	83	**VOLKSWAGEN**
28982	144 147	**VOLKSWAGEN**
29314	13 59 60 67 133 134	**VOLKSWAGEN**
29611	12	**VOLKSWAGEN**
29709	19 19 157 157 158 158	**VOLKSWAGEN**
29710	19 157 158	**VOLKSWAGEN**
29730	17 25 63	**VOLKSWAGEN**
29740	165	**VOLKSWAGEN**
29741	165	**VOLKSWAGEN**
29742	165	**VOLKSWAGEN**
29744	165	**VOLKSWAGEN**
29745	165	**VOLKSWAGEN**
29746	1 5 46 53	**VOLKSWAGEN**
29747	1 5 46 53	**VOLKSWAGEN**
29916	13 14 15 58 60 67 132 134 166	**VOLKSWAGEN**
29917	59 60 167	**VOLKSWAGEN**
29918	59 60 167	**VOLKSWAGEN**
29919	59 60 167	**VOLKSWAGEN**
29920	13 59 60 68 133 134 167	**VOLKSWAGEN**
29921	13 59 60 68 133 134	**VOLKSWAGEN**

Artikelnummer Article No.	Seite Page	Hersteller Manufacturer
29998	132 134	**VOLKSWAGEN**
29999	132 134	**VOLKSWAGEN**
30111	12 18 21 28 34 37 44 66 106 114 161 201	**VOLKSWAGEN**
30117	9 21 161	**VOLKSWAGEN**
30121	168 170 171	**VOLKSWAGEN**
30126	28 34 37 44 66 106 114 201	**VOLKSWAGEN**
30127	179 185 192	**VOLKSWAGEN**
30128	93 94 98 159	**VOLKSWAGEN**
30158	138 140 141	**VOLKSWAGEN**
30159	120 127	**VOLKSWAGEN**
30175	84 145 148 154	**VOLKSWAGEN**
30176	84 145 148 154	**VOLKSWAGEN**
30177	3 7 50 56 88	**VOLKSWAGEN**
30178	120	**VOLKSWAGEN**
30192	163	**VOLKSWAGEN**
30235	19 84 157	**VOLKSWAGEN**
30334	9	**VOLKSWAGEN**
30335	10 150	**VOLKSWAGEN**
30336	9 10 148	**VOLKSWAGEN**
30337	9 10 148	**VOLKSWAGEN**
30341	148	**VOLKSWAGEN**
30342	148	**VOLKSWAGEN**
30583	165	**VOLKSWAGEN**

Geänderte Bestellnummer / Amended part numbers

Artikelnummer alt Article No. old	Artikelnummer neu Article No. new	Artikelnummer alt Article No. old	Artikelnummer neu Article No. new	Artikelnummer alt Article No. old	Artikelnummer neu Article No. new
025 290 041 617	10169				
025 290 044 617	10161				
025 399 134 617	14493				
025 399 136 617	14142				
028 390 010 504	13678				
10176	25931				
10233	30111				
10235	30121				
13674	21030				
13675	21029				
14323	30117				
14393	30126				
14543	25863				
14543	25863				
14558	30127				
14577	30128				
15756	30158				
17328	30117				
17363	30159				
17660	21029				
20378	21030				
20387	17659				
21031	21030				
21032	21029				
21164	13678				
21238	30175				
21603	30176				
21928	30177				
22387	30178				
25330	25341				
25330	25341				
26770	17619				
26771	17620				
27637	27639				
27638	27640				
28645	28644				
28984	24803				
299 001 358 617	13676				
299 001 359 617	13677				
299 242 119 617	10172				

Geänderte Bestellnummer / Amended part numbers

Artikelnummer neu Article No. new	Artikelnummer alt Article No. old	Artikelnummer neu Article No. new	Artikelnummer alt Article No. old	Artikelnummer neu Article No. new	Artikelnummer alt Article No. old
10161	025 290 044 617	30117	17328		
10169	025 290 041 617	30121	10235		
10172	299 242 119 617	30126	14393		
13676	299 001 358 617	30127	14558		
13677	299 001 359 617	30128	14577		
13678	028 390 010 504	30158	15756		
13678	21164	30159	17363		
14142	025 399 136 617	30175	21238		
14493	025 399 134 617	30176	21603		
17619	26770	30177	21928		
17620	26771	30178	22387		
17659	20387				
21029	13675				
21029	17660				
21029	21032				
21030	13674				
21030	20378				
21030	21031				
24803	28984				
25341	25330				
25341	25330				
25863	14543				
25863	14543				
25931	10176				
27639	27637				
27640	27638				
28644	28645				
30111	10233				
30117	14323				

© ZF Trading GmbH - 14.10.06