2005

Honeywell

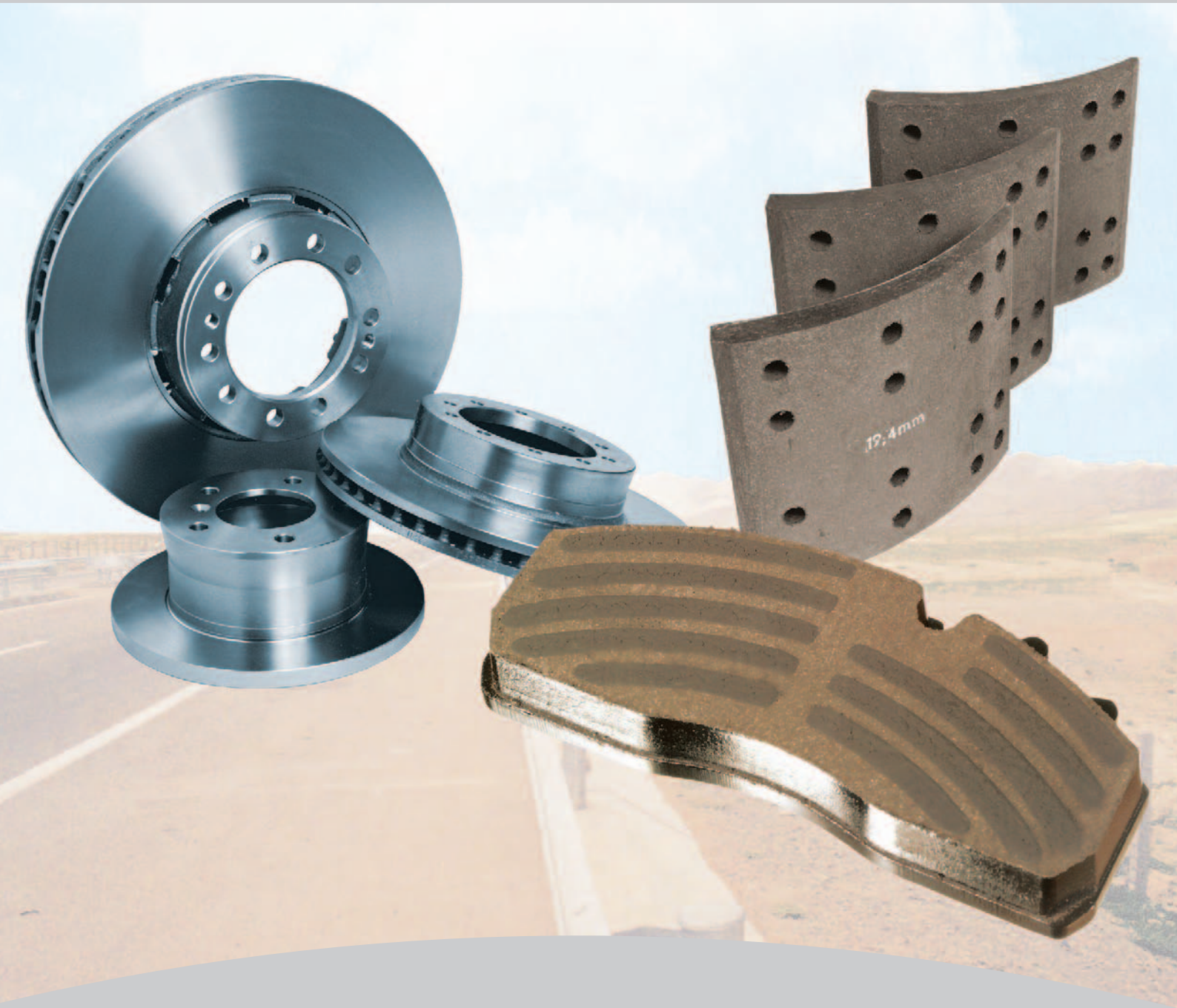

PADS, DISCS, LININGS
SCHEIBENBREMSBELÄGE, BREMSSCHEIBEN, TROMMELBREMSBELÄGE
SCHIJFREMBLOKKEN, REMSCHIJF, REMVOERINGEN
PLAQUETTES, DISQUES, GARNITURES
PASTIGLIE, DISCHI, CEPPI
PASTILHA, DISCO, CALÇO
PASTILLAS, DISCOS, FORROS

JURID®
by Honeywell








Camion	Remorque	Autobus / Autocar	VUL	TP	Essieu
Truck	Trailer	Bus / Coach	LCV	Off road	Axel
Lkw	Anhäger	Stadtbus / Reisebus	Transporter	Baumaschine	Achse
Camion	Remolque	Autobus / Autocar	Furgón	Camion de obras publicas	Eje
Aotocarro	Rimorchio	Bus / Autobus / Pullman	Furgone	Macchine operatrici	Assale

ENGLISH	FRANÇAIS	DEUTSCH	ESPAÑOL	ITALIANO
Axle	Essieu	Achse	Eje	Assale
Box truck	Porteur	Sattelauflieger	Camión con caja	Autocarro furgonato
Chassis	Châssis	Fahrgestell	Chasis	Telaio
Chassis Cab	Chassis Cabine	Chassis Kabine	Chasis de cabina	Telaio cabinato
Long Chassis	Chassis ralongé		Chasis largo	Telaio allungato
Disc hub	Moyeu à disque	Scheibennabe	Disco con buje incorporado	Mozzo circolare
Draw Bar			Barra de transmisión	Barra di torsione
Duplex brake	Frein Duplex	Duplexbremse	Freno Duplex	Freno Duplex
Esterel engine	Moteur Esterel		Motor Esterel	
Flat Bed Truck		Tieflader		
Flat Cam brake	Frein à came plate	Flachnockenbremse	Freno de leva plato	Freno a camme piatta
Garbage Truck	Benne à ordure	Müllwagen	Camión de basura	Camion per la raccolta dei rifiuti
Holes	Trous	Bohrungen	Agujeros	Fori
Hub centering	Centrage par moyeu	Nabenzentrierung	Centraje por buje	Centratura sul mozzo
Hydraulic Brake	Frein hydraulique	Hydraulische Bremse	Freno hidráulico	Freno idraulico
Hydraulic Servo brake	Servofrein hydraulique	Hydraulische Servobremse	Servofreno hidráulico	Servofreno idraulico
Lowdeck	Chassis bas	Niederflur	Piso bajo	
Military transporter	Transport militaire	Militärtransporter	Transporte militar	Trasporto militare
Option	Option	Option	Opción	Opzione
Handbrake	Frein à main	Handbremse	Freno de mano	Freno a mano
Pneumatic Brake	Frein pneumatique	Druckluftbremse	Freno pneumático	Freno pneumatico
Powerbrake for Mechanical actuation	Servo frein pour actionnement automatique	Servobremse für mechanische Betätigung	Servofreno para accionamiento mecánico	Servofreno ad azionamento automatico
RWD	Propulsion	Propulsion	Propulsión	Propulsione
Reinforced	Renforcé	verstärkt	Reforzado	Rinforzato
S Cam brake	Frein à came en S	S-Nockenbremse	Freno de leva en S	Freno a camme a S
Seats	Sièges	Anzahl Sitze	Asientos	Sedili
Servo actuated brake	Frein à réglage automatique	Automatische Servobremse	Freno con reglage automático	Freno a regolazione automatica
Servo brake	Servofrein	Servobremse	Servofreno	Servofreno
Simple wheel	Roue simple	Einfachbereifung	Rueda simple	Ruota singola
Single Deck	Pont simple	Eindecker	Puente simple	Assale semplice
Star hub	Moyeu à étoile	Sternnabe	Estrella	Mozzo a stella
Stud bolt centering	Centrage par goujon	Stiftzentrierung	Centraje por perno	Centratura a vite
Tanker	Camion citerne	Tankwagen	Camión cisterna	Camion cisterna
Traction	Traction	Traktion	Tracción	Trazione
Tractor	Tracteur	Trecker	Tractora	Trattore per semirimorchio
Twin wheels	Roues jumelées	Zwillingsbereifung	Doble Rueda	Ruote gemellate
Z Cam brake	Frein à came en Z	Z-Nockenbremse	Freno de leva en Z	Freno a came a Z
External machining	Usinage extérieur	Aussenveredelung	Rectificado exterior	Rettifica esterna
MilitaryVehicle	Véhicule militaire	Militärfahrzeug	Vehículo militar	Veicolo militare
LowMobility	Mobilité réduite		Mobilidad reducida	Mobilità ridotta
Double decker	Double pont	Doppeldecker	Doble puente	Assale abbonato
Piston with grooves	Piston avec encoches	Kolben mit Kühlrillen	Pistón con ranuras	Pistone con nervature

Sommaire • Summary • Inhal • Sumario • Indice • Inhoud













OE/JURID

JURID/WVA/BFMC

WVA/BFMC/JURID

BFMC/WVA/JURID



JURID / All rights reserved 2005



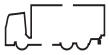

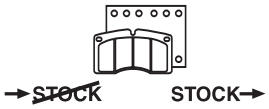



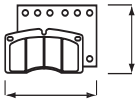

Date	Essieu Avant / Arrière	Garniture / Plaquettes		Diamètre	Dimensions des Garniture / Plaquettes
Date	Front / Rear Axel	Jusqu'à épuisement	référence de remplacement	Diameter	Linings / Pads Dimensions
Baujahr	Vorderachse / Hinterachse	Linings / Pads		Duchmesser	TBS / SBS Abmessungen
Fecha	Eje Delantero / Trasero	until stock last	replacement reference	Diametro	Dimensiones de los Forros / Pastillas
Data	Asse Anteriore / Posteriore	Trommel- / Scheibenbremsbeläge		Diametro	Dimensioni Guarnizioni / Pastiglie
Bouwjaar	Vooras / Achteras			Diameter	Afmetingen Remvoeringen / Schijfremblokken
Data	Frente / Trás	Forros / Pastillas		Diâmetro	

Guarnizioni / Pastiglie

Remvoeringen / Schijfremblokken





WVA







Disque Plein / Ventilé	Témoins d'usure	Composants WVA	Rivets	Quantié de rivets par essieu	Dimensions et normes
Solid Disc / Vented	Wear Indicators	WVA components	Rivets	Axel rivet quantity	Dimensions and norme
massive / belüftete Bremscheibe	Warnkontakte	WVA-Nummern	Nieten	Nieten (menge pro Asche)	Abmessungen & Norm
Disco solido / ventilado	Testigos de desgaste	Composicion WVA	Remaches	Cantidad de remaches por eje	Dimensiones y normas
Disco non ventilato / ventilato	Testimoni d'usura	Codice WVA	Rivetti	Quantità di rivetti per asse	Dimensione e caratteristiche
Geventileerde / Ongeventileerde Remschijf	Slijtindicator	WVA nummer	klinknagels	Aantal klinknagels par as	Afmetingen
Disco Maçiço / Disco ventilado	Indicadores de desgaste	Número de WVA			

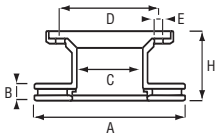

A	B	B min	H	C	D	E1/E2/E3
Diamètre du disque	Epaisseur	Epaisseur minimum	Hauteur	Diamètre du moyeu	Entraxes	Nombre et dimensions des trous
Disc diameter	Thickness	Minimum thickness	Height	Hub diameter	Bolt circle diameter	Hole number and dimensions
Bremscheibendurchmesser	Dicke	minimale Dicke	Höhe	Nabendurchmesser	Lochkranzdurchmesser	Bohrungen (Menge & Abmessungen)
Diametro del disco	Espesor	Espesor minimo	Altura	Diametro del buje	Diametro entre ejes	Cantidad y dimensiones de los agujeros
Diametro del disco	Spessore	Spessore minimo	Altezza	Diametro del mozzo	Interasse	Numero e dimensioni dei fori
Diameter remschijf	Dikte	minimaaldikte	Hoogte	Naafdiameter	Gatkransdiameter	Boringen (aantal & afemetingen)
Diâmetro	Espessura	Espessura Mínima	Altura	Diämetro interior		Número e dimensão de furos

JURID / All rights reserved 2005

JURID by Honeywell

Qualité
Quality
Qualität
Calidad
Calidade
Qualità

123		μ = 0,39
125		μ = 0,37
182		μ = 0,40
327		μ = 0,42
328		μ = 0,36
329		μ = 0,38
332		μ = 0,42
404		μ = 0,36
505		μ = 0,44
537		μ = 0,40
538		μ = 0,40
545		μ = 0,40
546		μ = 0,37
570		μ = 0,39



333		μ = 0,43
334		μ = 0,37
337		μ = 0,41
338		μ = 0,39
423		μ = 0,36
424		μ = 0,40
453		μ = 0,38
461		μ = 0,39
539		μ = 0,40
544		μ = 0,41

moins bruyant Less noise leiser menos ruidoso menos ruidoso meno rumoroso	usage normal normal use normaler Einsatz uso normal uso normal uso normale	usage sévère severe use schwerer Einsatz uso severo uso severo uso severo	usage très sévère very severe use besonders schwerer Einsatz uso muy severo uso muito severo uso molto severo	usage urbain urban use städtischer Einsatz uso urbano uso urbano uso urbano

JURID / All rights reserved 2005

JURID by Honeywell

JURID / All rights reserved 2005



JURID / All rights reserved 2005





BPW				
SB3745			539	
SB4345			539	
SB6000 (19,5")/SN6000			539 / 639	
SB7000 (22,5")/SN7000			539 / 639	
DAF				
Brake dimensions / Dimensions du frein /Trommeldurchmesser x Belagbreite / Dimensiones del freno / Misure del freno :				
420 x 150	•	•		570
420 x 175	•	•		570
420 x 200	•	•		570
420 x 240	•	•		570
EVOBUS				
MERCEDES				
O 303	•	•		538
O 402	•	•		545
O 405 / O 405G	•	•		545
O 407	•	•		537
O 407	•	•		545
O 408	•	•		537
MB CITY	•	•	539	
GIGANT				
Wabco PAN19-1			539	
Wabco PAN22-1			539	
HALDEX				
DC			539	
IVECO				
Eurotech / Eurocargo >16T	•	•		538
Eurotech / Eurocargo >16T	•		424	
Eurotech / Eurocargo >16T	•		539	
KNORR				
SB6000/SN6000			539	
SB7000 /SN7000			539	
SK7000			539	
MAN				
F 90 19T	•		423	
F 90 25T	•		423	
F 90 25T	•	•		538
F 90 26T / 32T	•	•		538
L 2000 4x2		•		538
M 17T	•	•		538
M 24T	•	•		538
U 14T	•	•		538
Bus				
A 03		•		537
A 03	•		423	
NG	•	•		545
NL 202	•	•		545
RUE	•	•		537
SD	•	•		545
SG	•	•		545
SL	•	•		545
SU	•	•		545
TG	•		539	
MERCEDES				
100		•		546
208		•		546
210	•		544	
310		•		546
410 - 510		•		546
609		•		546
609 - 814	•		544	
MERCEDES				
709	•	•		538
709 - 711		•		546
809 - 814		•		546
809 - 817	•	•		538
914	•	•		538
917 - 1120	•	•		538

MERCEDES				
1114 - 1120	•	•		538
1222		•		505
1222 - 1417	•	•		505
1314 - 1324	•	•		538
1420 - 1426	•	•		505
1514 - 1524	•	•		538
17T	•	•		505
18T	•	•		505
19T	•	•		505
24T - 25T	•	•		505
26T - 40T	•	•		505
Achse NR5/10DCL9			539	
Actros	•	•	539	
Atego	•	•	539	
Sprinter	•	•	453	
Vito	•	•	453	
V-Klasse	•	•	453	
NISSAN				
TL Cap Star	•		539	
RVI				
Agora		•		328
FR1	•		107	
G	•	•		327
GBC 180		•		332
Iliade		•		328
J	•	•		332
Kerax	•	•		327
M		•		327
Magnum		•		327
Midliner	•			327
Midliner	•		337	
Premium		•		327
R 312	•		111	
S	•	•		332
Tracer	•	•		328
TRM-DE	•	•		327
SAF / SAUER				
Haldex DB19			539	
Haldex DB22			539	
PAN17			539	
PAN19			539	
PAN19-1			539	
PAN22			539	
PAN22-1			539	
Knorr SB6000/SN6000			539 / 639	
Knorr SB7000/SN7000			539	
SCANIA				
SERIE 4 (Knorr SB7000)	•	•	539	
SETRA				
SG 219		•		545
SG 219	•		539	
SG 221		•		538
SG 221	•		539	
SG 250		•		545
SG 250	•		539	
S 300NC		•		545
S 300NC	•		539	
S 315		•		538
S 315	•		539	
S 328		•		538
S 328	•		539	
WABCO				
PAN17			539	
PAN19			539	
PAN19-1			539	
PAN22			539	
PAN22-1			539	

© JURID / All rights reserved 2005


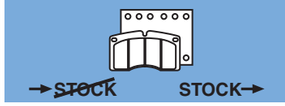

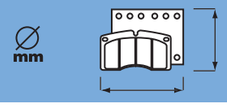

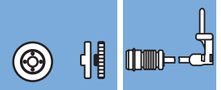




Acerbi



⊢⊣ : BPW *(EHZ/S)*, ⊢⊣ : BPW *(Trilex)*	•	1909409550	1909404040 1909401250	420	200x17.5/10.5x204		19094	8x19094	8xBC/97/1	8162080001	810800J	80	8x15x15.5-180°
⊢⊣ : BPW	•	1903209550	1903204040 1903201250	420	180x17.5/10.5x204		19032	8x19032	8xBC/98/1	8162080001	810800J	80	8x15x15.5-180°
	•	1957409550	1957404040 1957401250	300	200x18.0/11.0x145		19574	8x19574	8xBC/80/1	8162080001	810800J	64	8x15x15.5-180°
⊢⊣ : Propar 15",⊢⊣ : SMB *(C3)* 15"	•		1986203290 1986209550	311	203x18.5/17.0x140 203x18.0x143		19862 19863	4x19862 + 4x19863	4xFU/17/1 + 4xFU/18/1	8103050014	810500J	96	5x16x12-180°
⊢⊣ : ROR	•	1903609552	1903604042 1903601232	419	178x18.6/16.7x188 178x18.2/11.5x194		19036 19037	4x19036 + 4x19037	4xIL/66/3 + 4xIL/67/3	8158057001	810635J	96	6.35x15.88x11.9-150°(L10/10-10)
⊢⊣ : ROR 15"	•	1960409550	1960403290 1960401230	311	190x15.3/10.8x126 190x16.1/13.1x158		19604 19605	4x19604 + 4x19605	4xRW/9/2 + 4xRW/13/2	8158057001	810635J	80	6.35x15.88x11.9-150°(L10/10-10)
⊢⊣ : ROR	•		1936504042 1936509582 1936509552	419	203x18.2/11.5x194 203x18.6/15.7x188		19365 19366	4x19365 + 4x19366	4xRW/2/5 + 4xRW/1/5	8158057001	810635J	128	6.35x15.88x11.9-150°(L10/10-10)
⊢⊣ : SMB *(C1)*	•	1955709580 1955709550	1955704040 1955701230 1955701230	419	203x19.4/10.9x195 203x19.5/15.6x189		19557 19606	4x19557 + 4x19606	4xFT/7/1 + 4xFT/6/1	8103050015	810500J	128	5x16x12-150°
⊢⊣ : SMB	•	1961309580 1961309550	1961304040 1961301230 1961301230	419	178x19.5/15.6x189 178x19.4/10.9x189		19613 19614	4x19613 + 4x19614	4xFT/12/1 + 4xFT/11/1	8103050015	810500J	128	5x16x12-150°

Ackermann



⊢⊣ : BPW *(EHZ/S)*	•	1909409580	1909404040 1909401250	420	200x17.5/10.5x204		19094	8x19094	8xBC/97/1	8162080001	810800J	80	8x15x15.5-180°
⊢⊣ : BPW	•	1903209580	1903204040 1903201250	420	180x17.5/10.5x204		19032	8x19032	8xBC/98/1	8162080001	810800J	80	8x15x15.5-180°
	•		1920004040	420	160x18.0/11.0x204		19200	8x19200	8xBC/35/1	8162080001	810800J	80	8x15x15.5-180°

ACTM



⊢⊣ : BPW *(EHZ/S)*, ⊢⊣ : SAE Dupillier *(S4420)*	•	1909409580	1909404040 1909401250	420	200x17.5/10.5x204		19094	8x19094	8xBC/97/1	8162080001	810800J	80	8x15x15.5-180°
⊢⊣ : ROR	•	1903609552	1903604042 1903601232	419	178x18.6/16.7x188 178x18.2/11.5x194		19036 19037	4x19036 + 4x19037	4xIL/66/3 + 4xIL/67/3	8158057001	810635J	96	6.35x15.88x11.9-150°(L10/10-10)
⊢⊣ : ROR 15"	•	1960409550	1960403290 1960401230	311	190x15.3/10.8x126 190x16.1/13.1x158		19604 19605	4x19604 + 4x19605	4xRW/9/2 + 4xRW/13/2	8158057001	810635J	80	6.35x15.88x11.9-150°(L10/10-10)
⊢⊣ : ROR	•		1936904040	419	219x18.5/10.5x196 219x18.6/15.2x190		19369 19370	4x19369 + 4x19370	4xFU/4/2 + 4xFU/5/2	8158057001	810635J	96	6.35x15.88x11.9-150°(L10/10-10)
⊢⊣ : SAE Dupillier *(S3115)*	•		1940103290	305	150x12.0x141		19401	8x19401	8xSJ/36/1	8103060007	810600J	64	6x15x11.5-180°
⊢⊣ : SAE Dupillier *(S3212)*	•		1759203290	305	125x12.5x142.33		17592	8x17592		8103060007	810600J	48	6x15x11.5-180°
⊢⊣ : SAE Dupillier *(S3320)*	•	1976209550	1976203290 1976201250	305	200x16.3/14.6x143 200x15.2/8.7x143		19762 19763	4x19762 + 4x19763	4xLZ/2/1 + 4xLZ/3/1	8103080005	810800J	64	8x18x15.5-180°
⊢⊣ : SAE Dupillier	•		1935703290	420	150x18.0/8.2x204 150x18.0/12.0x204		19357 19358	4x19357 + 4x19358		8103080007	810800J	64	8x20x15.5-180°
	•		1940503290	305	200x12.0x141		19405	8x19405		8103080003	810800J	80	8x15x15.5-180°
	•		1711504040	400	120x10.0x189		17115	8x17115	8xBC/39/1	8162080002	810800J	64	8x18x15.5-180°

JURID by Honeywell
© JURID / All rights reserved 2005
© JURID / All rights reserved 2005
JURID by Honeywell

							WVA		BFMC	JURID	SUPASET	#	
		→STOCK	STOCK→	Ø mm									

Adige

ASDR

	•	1520709580		420	90x8.2x405		15207	4x15207	4xFI/79/1	8103080003	810800J	64	8x15x15.5-180°
	•		1549409530	420	90x11.8x397		15494	4x15494	4xFI/84/1	8103080003	810800J	64	8x15x15.5-180°
	•		1779709550	420	110x17.5/11.5x220		17797	8x17797		8103080007	810800J	80	8x20x15.5-180°
	•		1977909550	420	205x19.0/13.0x218		19779	8x19779		8103080007	810800J	120	8x20x15.5-180°

Albion

Chief Tain

	•	1939309580 1939309530	1939301230 1939301230	413	203x19.1x192		19393	8x19393	8xSV/27/1	8130074001		96	6.35x18x11.5-150°(AM)

Clydesdale

	•	1939309580 1939309530	1939301230 1939301230	413	203x19.1x192		19393	8x19393	8xSV/27/1	8130074001		96	6.35x18x11.5-150°(AM)

Reiver

	•		1907203320 1907209530	394	152x12.7x362		19072	4x19072	4xGG/83/1	8158056001	810635J	48	6.35x14.29x11.9-150°(L9/10-9)

Anteo

⊢⊣ : BPW	•	1909409550	1909404040 1909401250	420	200x17.5/10.5x204		19094	8x19094	8xBC/97/1	8162080001	810800J	80	8x15x15.5-180°
	•	1957409550	1957404040 1957401250	300	200x18.0/11.0x145		19574	8x19574	8xBC/80/1	8162080001	810800J	64	8x15x15.5-180°

Atcomex

⊢⊣ : BPW	•	1909409550	1909404040 1909401250	420	200x17.5/10.5x204		19094	8x19094	8xBC/97/1	8162080001	810800J	80	8x15x15.5-180°

Austeras

⊢⊣ : BPW	•	1903209550	1903204040 1903201250	420	180x17.5/10.5x204		19032	8x19032	8xBC/98/1	8162080001	810800J	80	8x15x15.5-180°
	•		1745609550	420	140x18.0/11.8x204		17456	8x17456		8103080008	810800J	80	8x22x15.5-180°

JURID by Honeywell
© JURID / All rights reserved 2005
© JURID / All rights reserved 2005
JURID by Honeywell

Avia

1500															
BN*(Van)*		•	**1327909530**	305	57.1x6.3x258		13279	4x13279	4xGG/70/1	**8102040003**	**810400J**	48	4x10x7.5-180°
		•	**1585409530**	306	76x6.5x255		15854	4x15854	4xAT/32	**8102040003**	**810400J**	48	4x10x7.5-180°
1600															
Van		•	**1554409530**	279	76.2x5.0x256		15544	4x15544	4xGG/95/1	**8102040003**	**810400J**	48	4x10x7.5-180°
2000															
BN*(Van)*		•	**1327909530**	305	57.1x6.3x258		13279	4x13279	4xGG/70/1	**8102040003**	**810400J**	48	4x10x7.5-180°
		•	**1585409530**	306	76x6.5x255		15854	4x15854	4xAT/32	**8102040003**	**810400J**	48	4x10x7.5-180°
Van		•	**1554409530**	279	76.2x5.0x256		15544	4x15544	4xGG/95/1	**8102040003**	**810400J**	48	4x10x7.5-180°
2500															
BN*(Van)*		•	**1327909530**	305	57.1x6.3x258		13279	4x13279	4xGG/70/1	**8102040003**	**810400J**	48	4x10x7.5-180°
		•	**1585409530**	306	76x6.5x255		15854	4x15854	4xAT/32	**8102040003**	**810400J**	48	4x10x7.5-180°
3500															
Van	71-	• •	**1585709530**	300	76x7.5x323 76x7.5x284		15857 15858	2x15857 + 2x15858		**8102040003**	**810400J**	56	4x10x7.5-180°
3600															
		•	**1795309530**	331	100.5x7.0x302.3		17953	4x17953		**8102040003**	**810400J**	64	4x10x7.5-180°
		•	**1795209530**	310	100.5x6.0x283.5		17952	4x17952				56	5.56x12.7x10.72-150°(K8)
3604															
		•	**1795309530**	331	100.5x7.0x302.3		17953	4x17953		**8102040003**	**810400J**	64	4x10x7.5-180°
		•	**1795209530**	310	100.5x6.0x283.5		17952	4x17952				56	5.56x12.7x10.72-150°(K8)
4000															
	71-	• •	**1585709530**	300	76x7.5x323 76x7.5x284		15857 15858	2x15857 + 2x15858		**8102040003**	**810400J**	56	4x10x7.5-180°
4006															
Minibus		•	**1793800**	306			17938	4x17938							
5000															
	72-	•	**1793800**	306			17938	4x17938							
5600															
		•	**1795309530**	331	100.5x7.0x302.3		17953	4x17953		**8102040003**	**810400J**	64	4x10x7.5-180°
		•	**1795209530**	310	100.5x6.0x283.5		17952	4x17952				56	5.56x12.7x10.72-150°(K8)
5603															
		•	**1795309530**	331	100.5x7.0x302.3		17953	4x17953		**8102040003**	**810400J**	64	4x10x7.5-180°
		•	**1795209530**	310	100.5x6.0x283.5		17952	4x17952				56	5.56x12.7x10.72-150°(K8)
6600															
		• •	**1754609580**	394	127x12.7x360		17546	4x17546	4xGG/118/1	**8158056001**	**810635J**	48	6.35x14.29x11.9-150°(L9/10-9)
7000															
	72-	•	**1793800**	306			17938	4x17938							

© JURID / All rights reserved 2005

© JURID / All rights reserved 2005

				→STOCK	STOCK→		∅ mm				WVA	BFMC	JURID	SUPASET	#	

Avia...

8600																
		•	•	**1754609580**			394	127x12.7x360		17546	4x17546	4xGG/118/1	**8158056001**	**810635J**	48	6.35x14.29x11.9-150°(L9/10-9)
A60																
	97-	•			**2901709560**			191x23x87		29017	4x29017					
A75																
	97-	•			**2901709560**			191x23x87		29017	4x29017					

AWD

M																
MTL33.27 *(8x6)*	91-	•	•	**1993901820** **1993909530**	**1907101230**		410	200x17.9/13.0x178		19071	8 x 19071	8xVL/88/1	**8158056001**	**810635J**	96	6.35x14.29x11.9-150°(L9/10-9)
MTM40.30	90-	•	•		**1992103270**		394	203x19.5/13.5x211		19921	8x19921	8xCW/12/1	**8158055001**	**810635J**	128	6.35x12.7x11.9-150°(L8/10-8)
MTM55 *(8x6)* **TN44** *(Military Transporter)*	88-	•	•		**1974503270**		394	203x18.2/11.8x160		19745	8x19745	8xCS/64/1	**8158056001**	**810635J**	96	6.35x14.29x11.9-150°(L9/10-9)
TL																
TL12.16, TL7.14, TL8.14	88-	•			**1528009530**		330	81x5.3x333.9 81x10.9x332.3		15280 15281	2x15280 + 2x15281	2xBO/38/1 + 2xBO/37/1	**8158057002**	**810635J**	48	6.35x15.88x11.9-150°(L10/10-10)
	88-		•		**1722909530**		330	106x10.6x344 106x5.0x344		17229 17230	2x17229 + 2x17230	2xBO/39/1 + 2xBO/40/1	**8158056001**	**810635J**	48	6.35x14.29x11.9-150°(L9/10-9)
TL12.16, TL7.14, TL8.14, TL9.14	90-	•	•		**2930209560**			175.5x22x78		29302	4x29302					
TL17.18	88-	•	•		**1992103270**		394	203x19.5/13.5x211		19921	8x19921	8xCW/12/1	**8158055001**	**810635J**	128	6.35x12.7x11.9-150°(L8/10-8)
TL17.27	91-	•	•	**1993901820** **1993909530**	**1907101230**		410	200x17.9/13.0x178		19071	8 x 19071	8xVL/88/1	**8158056001**	**810635J**	96	6.35x14.29x11.9-150°(L9/10-9)
TL24.27		•		**1993901820** **1993909530**	**1907101230**		410	200x17.9/13.0x178		19071	8 x 19071	8xVL/88/1	**8158056001**	**810635J**	96	6.35x14.29x11.9-150°(L9/10-9)
			•	**1993809530**	**1993801820**		410	175x17.9/13.0x178		19938	8 x 19938	8xVL/87/1	**8158056001**	**810635J**	96	6.35x14.29x11.9-150°
TM																
TM40 *(6x6)*	88-	•	•		**1974503270**		394	203x18.2/11.8x160		19745	8x19745	8xCS/64/1	**8158056001**	**810635J**	96	6.35x14.29x11.9-150°(L9/10-9)

Baj et Fond

⊢⊣ : BPW			•	**1957409550**	**1957404040** **1957401250**		300	200x18.0/11.0x145		19574	8x19574	8xBC/80/1	**8162080001**	**810800J**	64	8x15x15.5-180°
⊢⊣ : SAE Dupillier			•		**1935903290**		414	150x19.0/9.1x202 151x19.0/14.8x200		19359 19360	4x19359 + 4x19360		**8102060009**		64	6x18x12-180°
			•		**1936703290**		414	211x17.7/9.6x202 211x18.6/15.2x220		19367 19368	4x19367 + 4x19368		**8102060009**		96	6x18x12-180°

JURID by Honeywell
© JURID / All rights reserved 2005
© JURID / All rights reserved 2005
JURID by Honeywell

			→STOCK	STOCK→	∅ mm			WVA		BFMC	JURID	SUPASET	#	

Baj et Fond…

…														
⊢⊣ : SAF Sauer		•		1928304040	420	180x19.6/16.4x189 180x19.0/12.0x194		19283 19284	4x19283 + 4x19284	4xSJ/28/1 + 4xSJ/29/1	8103080005	810800J	64	8x18x15.5-180°
		•		1947703290	419	203x18.4/15.3x189 203x18.8/11.9x195		19477 19478	4x19477 + 4x19478	4xSJ/30/1 + 4xSJ/31/1	8103080005	810800J	64	8x18x15.5-180°
⊢⊣ : Trailor *(N400)*		•	1955709580 1955709550	1955704040 1955701230 1955701230	419	203x19.4/10.9x195 203x19.5/15.6x189		19557 19606	4x19557 + 4x19606	4xFT/7/1 + 4xFT/6/1	8103050015	810500J	128	5x16x12-150°
⊢⊣ : Trailor		•	1903609580	1903604040 1903601230	419	178x19.0/16.0x189 178x18.2/11.5x194		19036 19037	4x19036 + 4x19037	4xRW/5/4 + 4xRW/6/4	8103050014	810500J	96	5x16x12-180°
		•	1936509580 1936509550	1936504040 1936501230 1936501230	419	203x18.6/15.7x188 203x18.6/15.7x188		19365 19366	4x19365 + 4x19366	4xRW/2/1 + 4xRW/1/1	8103050014	810500J	96	5x16x12-180°

Bartoletti

⊢⊣ : BPW *(Trilex)*		•	1909409580	1909404040 1909401250	420	200x17.5/10.5x204		19094	8x19094	8xBC/97/1	8162080001	810800J	80	8x15x15.5-180°
		•		1790509550	430	140x17.5/9.5x214 140x17.5/14.1x214		17905 17906	4x17905 + 4x17906		8103080007	810800J	64	8x20x15.5-180°
		•		1980109550	430	200x17.5/14.2x207 200x17.5/8.5x207		19801 19802	4x19801 + 4x19802		8103080008	810800J	96	8x22x15.5-180°

Battaglino

⊢⊣ : BPW		•	1903209550	1903204040 1903201250	420	180x17.5/10.5x204		19032	8x19032	8xBC/98/1	8162080001	810800J	80	8x15x15.5-180°
		•	1909409550	1909404040 1909401250	420	200x17.5/10.5x204		19094	8x19094	8xBC/97/1	8162080001	810800J	80	8x15x15.5-180°
⊢⊣ : York		•	1520709580		420	90x8.2x405		15207	4x15207	4xFI/79/1	8103080003	810800J	64	8x15x15.5-180°
		•		1936904040	419	219x18.5/10.5x196 219x18.6/15.2x190		19369 19370	4x19369 + 4x19370	4xFU/4/2 + 4xFU/5/2	8158057001	810635J	96	6.35x15.88x11.9-150°(L10/10-10)

Bedford

CF 2														
CF230, CF250, CF280, CF340, CF350	84-87	•		571233J		88.5x15x70.5		20364 20365	2x20364 + 2x20365					
Chevanne														
		•		1318905910	200	45x5.0x186		13189	4x13189	4xOP/20/1	8102040001	810400J	40	4x7x7.5-180°
Midi														
	85-	•		572335J		133.2x15.5x47		21115	4x21115					

JURID by Honeywell
© JURID / All rights reserved 2005
© JURID / All rights reserved 2005
JURID by Honeywell

			STOCK		⌀ mm				WVA	BFMC	JURID	SUPASET	#	

Bedford...

Rascal

	85-	•	**572250J**		119.2x15x37.8		20731	4x20731						

KB

KB21, KB26	81-84	•	**571820J**		258	88.5x15x70.5		21019	4x21019					
KB41	84-	•	**572258J**			156.3x15.5x54.8		20880	4x20880					
KB44	81-84	•	**572225J**			115.7x15x50.4		21254	4x21254					

TK

EOL, EOM, KC10/SOL, KC2/SOL, KD/SM	80-87	•	**1528009530**		330	81x5.3x333.9 81x10.9x332.3		15280 15281	2x15280 + 2x15281	2xBO/38/1 + 2xBO/37/1	**8158057002**	**810635J**	48	6.35x15.88x11.9-150°(L10/10-10)
	80-87	•	**1722909530**		330	106x10.6x344 106x5.0x344		17229 17230	2x17229 + 2x17230	2xBO/39/1 + 2xBO/40/1	**8158056001**	**810635J**	48	6.35x14.29x11.9-150°(L9/10-9)
TK1470*(KH)*(Ⓒ : Lockheed)	08/71-87	•	**1780401820**		394	127x12.7x354		17804	4x17804	4xDO/80/2	**8102060005**		64	6x13.5x12-180°
	08/71-87	•	**1962203320**		394	152x12.7x354		19622	4x19622	4xLH/82/2	**8102060004**		64	6x13.5x11-180°
TK1630*(KM)*	77-87	•	**1911109530**		394	177.8x12.7x358.4		19111	4x19111	4xGG/92/1	**8158056001**	**810635J**	72	6.35x14.29x11.9-150°(L9/10-9)
	77-87	•	**1937129530**		394	203x12.7x386		19371	4x19371	4xGG/142/1	**8158056001**	**810635J**	72	6.35x14.29x11.9-150°(L9/10-9)
TK570	77-87	•	**1578909530**		330	76.2x9.0x302		15789	4x15789	4xGG/171/1	**8158056001**	**810635J**	48	6.35x14.29x11.9-150°(L9/10-9)
TK750, TK860	77-87	•	**1528009530**		330	81x5.3x333.9 81x10.9x332.3		15280 15281	2x15280 + 2x15281	2xBO/38/1 + 2xBO/37/1	**8158057002**	**810635J**	48	6.35x15.88x11.9-150°(L10/10-10)
TK750, TK860 **TK860***(KD)(6x2)*	77-87	•	**1722909530**		330	106x10.6x344 106x5.0x344		17229 17230	2x17229 + 2x17230	2xBO/39/1 + 2xBO/40/1	**8158056001**	**810635J**	48	6.35x14.29x11.9-150°(L9/10-9)

TL

TL1470*(DMY)*, **TL1470***(DOT)*	80-87	•	**1780401820**		394	127x12.7x354		17804	4x17804	4xDO/80/2	**8102060005**		64	6x13.5x12-180°
	80-87	•	**1962203320**		394	152x12.7x354		19622	4x19622	4xLH/82/2	**8102060004**		64	6x13.5x11-180°
TL1630*(DMY8)*	80-87	•	**1937129530**		394	203x12.7x386		19371	4x19371	4xGG/142/1	**8158056001**	**810635J**	72	6.35x14.29x11.9-150°(L9/10-9)
TL1630*(DMY8)*, **TL1630***(DOV)*	80-87	•	**1937129530**		394	203x12.7x386		19371	4x19371	4xGG/142/1	**8158056001**	**810635J**	72	6.35x14.29x11.9-150°(L9/10-9)
TL1630*(DOV)*	80-87	•	**1911109530**		394	177.8x12.7x358.4		19111	4x19111	4xGG/92/1	**8158056001**	**810635J**	72	6.35x14.29x11.9-150°(L9/10-9)
TL24-27		•	**1993901820** **1993909530**	**1907101230**	410	200x17.9/13.0x178		19071	8 x 19071	8xVL/88/1	**8158056001**	**810635J**	96	6.35x14.29x11.9-150°(L9/10-9)
		•	**1993809530**	**1993801820**	410	175x17.9/13.0x178		19938	8 x 19938	8xVL/87/1	**8158056001**	**810635J**	96	6.35x14.29x11.9-150°
TL570*(DOG)*	80-87	•	**1578909530**		330	76.2x9.0x302		15789	4x15789	4xGG/171/1	**8158056001**	**810635J**	48	6.35x14.29x11.9-150°(L9/10-9)
TL750*(DOL)*, **TM860***(DOM)* **TL860***(DOM)(6x2,6x4)*	80-87	•	**1722909530**		330	106x10.6x344 106x5.0x344		17229 17230	2x17229 + 2x17230	2xBO/39/1 + 2xBO/40/1	**8158056001**	**810635J**	48	6.35x14.29x11.9-150°(L9/10-9)
TL750*(DOL)*, **TM860***(DOM)*	80-87	•	**1528009530**		330	81x5.3x333.9 81x10.9x332.3		15280 15281	2x15280 + 2x15281	2xBO/38/1 + 2xBO/37/1	**8158057002**	**810635J**	48	6.35x15.88x11.9-150°(L10/10-10)

TM

TM1500	10/74-87	• •	**1911109530**		394	177.8x12.7x358.4		19111	4x19111	4xGG/92/1	**8158056001**	**810635J**	72	6.35x14.29x11.9-150°(L9/10-9)
TM1500, TM1700(⊢→⊣ : Kirkstall)	10/74-87	• •	**1974503270**		394	203x18.2/11.8x160		19745	8x19745	8xCS/64/1	**8158056001**	**810635J**	96	6.35x14.29x11.9-150°(L9/10-9)
TM1700	10/74-87	•	**1911109530**		394	177.8x12.7x358.4		19111	4x19111	4xGG/92/1	**8158056001**	**810635J**	72	6.35x14.29x11.9-150°(L9/10-9)
TM2250*(KW)*, **TM2600***(HM)*, **TM2600***(KW)(6x2,6x4)*	10/74-87	•	**1937129530**		394	203x12.7x386		19371	4x19371	4xGG/142/1	**8158056001**	**810635J**	72	6.35x14.29x11.9-150°(L9/10-9)
TM2300*(4x2)*	77-87	•	**1907203320** **1907209530**		394	152x12.7x362		19072	4x19072	4xGG/83/1	**8158056001**	**810635J**	48	6.35x14.29x11.9-150°(L9/10-9)

© JURID / All rights reserved 2005

© JURID / All rights reserved 2005

			STOCK	STOCK	⌀ mm				WVA	BFMC	JURID	SUPASET	#		

Bedford...

TM

TM2500, TM3250 TM3250EWV8, TM4200 *(6x2,6x4)*	10/74-87	•	•	**1937129530**	394	203x12.7x386		19371	4x19371	4xGG/142/1	**8158056001**	**810635J**	72	6.35x14.29x11.9-150°(L9/10-9)

BLP

(O) : Girling	74-87	•	•	**1907203320 1907209530**	394	152x12.7x362		19072	4x19072	4xGG/83/1	**8158056001**	**810635J**	48	6.35x14.29x11.9-150°(L9/10-9)

PGK

	77-87	•		**1528009530**	330	81x5.3x333.9 81x10.9x332.3		15280 15281	2x15280 + 2x15281	2xBO/38/1 + 2xBO/37/1	**8158057002**	**810635J**	48	6.35x15.88x11.9-150°(L10/10-10)
	77-87		•	**1722909530**	330	106x10.6x344 106x5.0x344		17229 17230	2x17229 + 2x17230	2xBO/39/1 + 2xBO/40/1	**8158056001**	**810635J**	48	6.35x14.29x11.9-150°(L9/10-9)

VAS

3/PFK, 5/PK	61-	•		**1528009530**	330	81x5.3x333.9 81x10.9x332.3		15280 15281	2x15280 + 2x15281	2xBO/38/1 + 2xBO/37/1	**8158057002**	**810635J**	48	6.35x15.88x11.9-150°(L10/10-10)
	61-		•	**1722909530**	330	106x10.6x344 106x5.0x344		17229 17230	2x17229 + 2x17230	2xBO/39/1 + 2xBO/40/1	**8158056001**	**810635J**	48	6.35x14.29x11.9-150°(L9/10-9)

YLQ

(O) : Girling	74-87	•	•	**1907203320 1907209530**	394	152x12.7x362		19072	4x19072	4xGG/83/1	**8158056001**	**810635J**	48	6.35x14.29x11.9-150°(L9/10-9)

YMQ

(O) : Girling	74-87	•	•	**1907203320 1907209530**	394	152x12.7x362		19072	4x19072	4xGG/83/1	**8158056001**	**810635J**	48	6.35x14.29x11.9-150°(L9/10-9)

YMT

500	76-	•		**1911109530**	394	177.8x12.7x358.4		19111	4x19111	4xGG/92/1	**8158056001**	**810635J**	72	6.35x14.29x11.9-150°(L9/10-9)
	76-		•	**1937129530**	394	203x12.7x386		19371	4x19371	4xGG/142/1	**8158056001**	**810635J**	72	6.35x14.29x11.9-150°(L9/10-9)

YNT

	76-	•		**1911109530**	394	177.8x12.7x358.4		19111	4x19111	4xGG/92/1	**8158056001**	**810635J**	72	6.35x14.29x11.9-150°(L9/10-9)
	76-		•	**1937129530**	394	203x12.7x386		19371	4x19371	4xGG/142/1	**8158056001**	**810635J**	72	6.35x14.29x11.9-150°(L9/10-9)

YRQ

(O) : Girling	74-87	•	•	**1907203320 1907209530**	394	152x12.7x362		19072	4x19072	4xGG/83/1	**8158056001**	**810635J**	48	6.35x14.29x11.9-150°(L9/10-9)
(O) : Lockheed	71-74	•		**1780401820**	394	127x12.7x354		17804	4x17804	4xDO/80/2	**8102060005**		64	6x13.5x12-180°
	71-74		•	**1962203320**	394	152x12.7x354		19622	4x19622	4xLH/82/2	**8102060004**		64	6x13.5x11-180°

YRT

	76-	•		**1911109530**	394	177.8x12.7x358.4		19111	4x19111	4xGG/92/1	**8158056001**	**810635J**	72	6.35x14.29x11.9-150°(L9/10-9)
	76-		•	**1937129530**	394	203x12.7x386		19371	4x19371	4xGG/142/1	**8158056001**	**810635J**	72	6.35x14.29x11.9-150°(L9/10-9)

Benalu

⊢⊣ : BPW *(EHZ/S)*, **⊢⊣ : BPW** *(Trilex)*			•	**1909409550**	**1909404040 1909401250**	420	200x17.5/10.5x204		19094	8x19094	8xBC/97/1	**8162080001**	**810800J**	80	8x15x15.5-180°

© JURID / All rights reserved 2005

© JURID / All rights reserved 2005

										WVA	BFMC			JURID	SUPASET	#	
	STOCK	STOCK	⌀ mm													

Benalu...

...

⊢⊣ : BPW	•	1903209580	1903204040 1903201250	420	180x17.5/10.5x204		19032	8x19032	8xBC/98/1	8162080001	810800J	80	8x15x15.5-180°
⊢⊣ : Colaert	•		1940603290	414	200x17.2/19.0/15.8x252 200x15.8/19.0/11.9x345		19406 19407	2x19406 + 2x19407	2xLF/102/1 + 2xLF/103/1	8103060008		82	6x16x12-180°
	•		1947903290	414	175x15.8/19.0/11.9x345 175x17.2/19.0/15.8x252		19479 19480	2x19479 + 2x19480	2xLF/100/1 + 2xLF/101/1	8103060008		112	6x16x12-180°
	•		1951103270	414	150x17.2/19.0/15.8x252 150x15.8/19.0/11.9x345		19511 19512	2x19511 + 2x19512	2xLF/104/1 + 2xLF/105/1	8103060008		92	6x16x12-180°
⊢⊣ : Propar *(P)* Disc hub, ⊢⊣ : Propar *(P)* Star hub, ⊢⊣ : Propar *(PSL)* Disc hub	•	1903609580	1903604040 1903601230	419	178x19.0/16.0x189 178x18.2/11.5x194		19036 19037	4x19036 + 4x19037	4xRW/5/4 + 4xRW/6/4	8103050014	810500J	96	5x16x12-180°
⊢⊣ : ROR *(TM16)* 10 holes	•	1903609552	1903604042 1903601232	419	178x18.6/16.7x188 178x18.2/11.5x194		19036 19037	4x19036 + 4x19037	4xIL/66/3 + 4xIL/67/3	8158057001	810635J	96	6.35x15.88x11.9-150°(L10/10-10)
⊢⊣ : ROR *(TM16)* ◯ : Z Cam 10 holes, ⊢⊣ : ROR *(TM16)* ◯ : Z Cam 6 holes	•		1936904040	419	219x18.5/10.5x196 219x18.6/15.2x190		19369 19370	4x19369 + 4x19370	4xFU/4/2 + 4xFU/5/2	8158057001	810635J	96	6.35x15.88x11.9-150°(L10/10-10)
⊢⊣ : ROR	•		1936504042 1936509582 1936509552	419	203x18.2/11.5x194 203x18.6/15.7x188		19365 19366	4x19365 + 4x19366	4xRW/2/5 + 4xRW/1/5	8158057001	810635J	128	6.35x15.88x11.9-150°(L10/10-10)
⊢⊣ : SAF Sauer	•		1928304040	420	180x19.6/16.4x189 180x19.0/12.0x194		19283 19284	4x19283 + 4x19284	4xSJ/28/1 + 4xSJ/29/1	8103080005	810800J	64	8x18x15.5-180°
	•		1947703290	419	203x18.4/15.3x189 203x18.8/11.9x195		19477 19478	4x19477 + 4x19478	4xSJ/30/1 + 4xSJ/31/1	8103080005	810800J	64	8x18x15.5-180°
⊢⊣ : SMB *(C1)*	•	1955709580 1955709550	1955704040 1955701230 1955701230	419	203x19.4/10.9x195 203x19.5/15.6x189		19557 19606	4x19557 + 4x19606	4xFT/7/1 + 4xFT/6/1	8103050015	810500J	128	5x16x12-150°
⊢⊣ : SMB *(C2)*	•	1961309580 1961309550	1961304040 1961301230 1961301230	419	178x19.5/15.6x189 178x19.4/10.9x189		19613 19614	4x19613 + 4x19614	4xFT/12/1 + 4xFT/11/1	8103050015	810500J	128	5x16x12-150°

Bertoia

⊢⊣ : BPW	•	1909409550	1909404040 1909401250	420	200x17.5/10.5x204		19094	8x19094	8xBC/97/1	8162080001	810800J	80	8x15x15.5-180°
	•	1957409550	1957404040 1957401250	300	200x18.0/11.0x145		19574	8x19574	8xBC/80/1	8162080001	810800J	64	8x15x15.5-180°

Blumhardt

⊢⊣ : BPW *(EHZ/S)*	•	1909409550	1909404040 1909401250	420	200x17.5/10.5x204		19094	8x19094	8xBC/97/1	8162080001	810800J	80	8x15x15.5-180°
⊢⊣ : BPW	•	1903209580	1903204040 1903201250	420	180x17.5/10.5x204		19032	8x19032	8xBC/98/1	8162080001	810800J	80	8x15x15.5-180°

JURID by Honeywell

© JURID / All rights reserved 2005

© JURID / All rights reserved 2005

JURID by Honeywell

					STOCK →	← STOCK	⌀ mm				WVA	BFMC	JURID	SUPASET	#			

Booth Trailers

Low Loader		•	**1960409550**	**1960403290** **1960401230**		311	190x15.3/10.8x126 190x16.1/13.1x158			19604 19605	4x19604 + 4x19605	4xRW/9/2 + 4xRW/13/2	**8158057001**	**810635J**	80	6.35x15.88x11.9-150°(L10/10-10)

Bova

Europa

		•		**1915005700** **1915009530**		419	152.4x18.5/9.5x211 152.4x18.5/13.5x218			19150 19151	4x19150 + 4x19151	4xDF/20/3 + 4xDF/21/3	**8158057001**	**810635J**	80	6.35x15.88x11.9-150°(L10/10-10)
		•		**1732405700**		406	127x19.3/15.0x209 127x19.2/10.8x203			17324 17325	4x17324 + 4x17325	4xDF/15/3 + 4xDF/14/3	**8158057001**	**810635J**	80	6.35x15.88x11.9-150°(L10/10-10)

Futura

FHD12.370A *(Ⓞ : Knorr(SB 6000))*	96-	•		**2909305390**		377	210.7x30x92.5			29093	4x29093							
FHD14, FHX, FLD *(Ⓞ : Knorr(SB 7000))*	94-	•		**2910815390**		430	248x30x109	**567800J**		29108	4x29108							
	94-	•		**2910815390**		430	248x30x109	**567801J**		29108	4x29108							
FHD*(Ⓞ : Knorr(SB 7000))*	94-	•	•	**2910815390**		430	248x30x109			29108	4x29108							
FHD, FVD	86-89	•	•	**1989005700** **1989003270**		420	200x19.0/11.8x179 200x19.0/16.2x176			19890 19891	4x19890 + 4x19891	4xDF/32/1 + 4xDF/33/1	**8158057001**	**810635J**	128	6.35x15.88x11.9-150°(L10/10-10)
FHD, FVD*(Daf chassis)*	83-85	•		**1915005700** **1915009530**		419	152.4x18.5/9.5x211 152.4x18.5/13.5x218			19150 19151	4x19150 + 4x19151	4xDF/20/3 + 4xDF/21/3	**8158057001**	**810635J**	80	6.35x15.88x11.9-150°(L10/10-10)
FHD, FVD	90-95	•		**2974705440** **2974709560**		460	139x32x121	**567115J**		29747	8x29747							
	90-95	•		**2996905440**		460	139x34.5x121	**567115J**		29969	8x29969							
FHD, FVD*(Daf chassis)*	83-85		•	**1925609580**	**1925605700**		419	178x18.5/9.4x211 178x18.5/13.8x218			19256 19260	4x19256 + 4x19260	4xDF/16/1 + 4xDF/17/2	**8158057001**	**810635J**	112	6.35x15.88x11.9-150°(L10/10-10)
FHD, FVD	90-95		•		**1989005700** **1989003270**		420	200x19.0/11.8x179 200x19.0/16.2x176			19890 19891	4x19890 + 4x19891	4xDF/32/1 + 4xDF/33/1	**8158057001**	**810635J**	128	6.35x15.88x11.9-150°(L10/10-10)
FHM12-290, FHM12-360 *(Mercedes chassis)*	83-	•			**1970605450** **1957909580**		410	163x17.9/8.0x219 163x18.0/15.4x174 163x19x173.66			19579 19580 19706	4x19579 + 2x19580 + 2x19706	4xMB/75/1 + 2xMB/74/1 + 2xMB/74/2	**8162080002**	**810800J**	72	8x18x15.5-180°
	83-	•			**1970705450** **1958109580**		410	223x17.9/7.9x219 223x18.0/15.4x174 223x19x173.66			19581 19582 19707	4x19581 + 2x19582 + 2x19707	4xMB/77/1 + 2xMB/76/1 + 2xMB/76/2	**8162080002**	**810800J**	72	8x18x15.5-180°

BPW

Eco*(Ⓞ : S Cam)*	98-		•	**1903209580**	**1903204040** **1903201250**		420	180x17.5/10.5x204			19032	8x19032	8xBC/98/1	**8162080001**	**810800J**	80	8x15x15.5-180°
	98-		•	**1909409580**	**1909404040** **1909401250**		420	200x17.5/10.5x204			19094	8x19094	8xBC/97/1	**8162080001**	**810800J**	80	8x15x15.5-180°
Eco*(Ⓞ : S Cam +ABS)*			•	**1903209580**	**1903204040** **1903201250**		420	180x17.5/10.5x204			19032	8x19032	8xBC/98/1	**8162080001**	**810800J**	80	8x15x15.5-180°

© JURID / All rights reserved 2005

© JURID / All rights reserved 2005

			STOCK	STOCK	mm					WVA	BFMC	JURID	SUPASET	#			

BPW...

...

Trilex *(O) : S Cam,(O) : S Cam Notched)* **EHZ/S, Eco, HZ 13010, HZ 14010, HZ/S12010** *(O) : S Cam)*		•	**1909409580**	**1909404040 1909401250**		420	200x17.5/10.5x204			19094	8x19094	8xBC/97/1	**8162080001**	**810800J**	80	8x15x15.5-180°
KR 10010		•	**1990209580**	**1990204040 1990201250**		360	200x18.6/13.9x159.3 200x18.6/11.5x189.5			19902 19903	4x19902 + 4x19903	4xBC/100/1 + 4xBC/101/1	**8162080001**	**810800J**	72	8x15x15.5-180°
SB 3745 *(O) : Knorr(SB 6000) -ABS 19.5")*	98-4/03	•		**2909305390**		377	210.7x30x92.5	**569022J**		29093	4x29093					
SB 3745 *(O) : Knorr(SB 6000) +ABS 19.5")*	98-4/03	•		**2909305390**		377	210.7x30x92.5	**569123J**		29093	4x29093					
SB 4345 *(O) : Knorr(SB 7000) 22.5")*	98-4/03	•		**2910815390**		430	248x30x109	**569020J**		29108	4x29108					
SB 4345 *(O) : Knorr(SB 7000) +ABS 22.5")*	98-4/03	•		**2910815390**		430	248x30x109	**569021J**		29108	4x29108					
SB3745 *(O) : Knorr(SN6) 19.5")*	05/03-	•					210.9x30x92.5			29165	4x29165					
SB4309 *(O) : Knorr(SN7) 22.5")*	05/03-	•					248x30x109			29167	4x29167					
SB4345 *(O) : Knorr(SK7) 22.5")*	05/03-	•					210.9x30x108.3			29171	4x29171					
SN 3015 *(O) : S Cam)*		•		**1957304040**		300	150x18.0/12.5x145			19573	8x19573	8xBC/79/1	**8162080001**	**810800J**	64	8x15x15.5-180°
SN 3020 *(O) : S Cam)*		•	**1957409550**	**1957404040 1957401250**		300	200x18.0/11.0x145			19574	8x19574	8xBC/80/1	**8162080001**	**810800J**	64	8x15x15.5-180°
SN 4212 *(O) : S Cam)*		•		**1737704040**		420	120x18.0/11.2x204			17377	8x17377	8xBC/78/1	**8162080001**	**810800J**	80	8x15x15.5-180°
(O) : Knorr *(SB 6000)* **19.5"**	98-4/03	•		**2909305390**			210.7x30x92.5			29093	4x29093					
(O) : Knorr *(SB 7000)* **22.5"**	98-4/03	•		**2910815390**			248x30x109			29108	4x29108					
		•		**1108401160**		250	40x5.0x245			11084	4x11084	4xBC/51/1	**8103040002**	**810400J**	40	4x8x7.5-180°
		•		**1155603320**		230	40x5.0x224			11556	4x11556		**8103040002**	**810400J**	40	4x8x7.5-180°
		•		**1500405380**		300	60x5.0x290			15004	4x15004	4xBC/52/1	**8102040003**	**810400J**	64	4x10x7.5-180°
		•		**1504404210**		350	60x6.0x339			15044	4x15044	4xFD/85/1	**8103060002**	**810600J**	40	6x10x11.5-180°
		•		**1524705380**		400	80x8.0x389			15247	4x15247	4xFD/86/1	**8162080001**	**810800J**	40	8x15x15.5-180°
		•		**1711504040**		400	120x10.0x189			17115	8x17115	8xBC/39/1	**8162080002**	**810800J**	64	8x18x15.5-180°
		•		**1745609550**		420	140x18.0/11.8x204			17456	8x17456		**8103080008**	**810800J**	80	8x22x15.5-180°
		•		**1780709550**		420	124x18.3/11.5x203			17807	8x17807		**8103080005**	**810800J**	80	8x18x15.5-180°
		•		**1900545380**		430	150x12.3x205			19005	8x19005	8xBC/41/1	**8162080002**	**810800J**	64	8x18x15.5-180°
(O) : Flat Cam		•		**1910204040**		300	150x10.3x142			19102	8x19102	8xBC/54/1	**8162080001**	**810800J**	64	8x15x15.5-180°
		•		**1910304040**		300	200x10.0x141			19103	8x19103	8xBC/55/1	**8162080001**	**810800J**	64	8x15x15.5-180°
(O) : S Cam		•		**1920004040**		420	160x18.0/11.0x204			19200	8x19200	8xBC/35/1	**8162080001**	**810800J**	80	8x15x15.5-180°
(O) : ZRZ Cam		•		**1939605380**		300	150x12.5/10.5x141			19396	8x19396		**8162080001**	**810800J**	64	8x15x15.5-180°
		•		**1939704040**		300	200x12.5/10.5x141			19397	8x19397		**8162080001**	**810800J**	64	8x15x15.5-180°
		•		**1951504040**		300	200x16.0/8.2x129 200x16.0/12.7x132			19515 19516	4x19515 + 4x19516	4xSJ/23/1 + 4xSJ/22/1	**8162080001**	**810800J**	64	8x15x15.5-180°
(O) : S Cam		•		**1959194040**		420	220x17.5/10.5x204			19591	8x19591	8xBC/81/1	**8162080001**	**810800J**	80	8x15x15.5-180°
		•		**1982509550**		420	220x17.9/12.4x219			19825	8x19825	8xBC/99/1	**8103080005**	**810800J**	80	8x18x15.5-180°
		•		**1995203290**		360	160x18.6/11.1x190 160x18.6/14.0x159			19952 19953	4x19952 + 4x19953	4xBC/104/1 + BC/105/1	**8162080001**	**810800J**	72	8x15x15.5-180°

© JURID / All rights reserved 2005

© JURID / All rights reserved 2005

			→STOCK	STOCK→	∅ mm			WVA	BFMC	JURID	SUPASET	#	

Bristol

LH													
LHL, LHS	•		**1754609580**		394	127x12.7x360		17546	4x17546	4xGG/118/1	**8158056001**	**810635J**	48	6.35x14.29x11.9-150°(L9/10-9)
		•		**1907203320** **1907209530**	394	152x12.7x362		19072	4x19072	4xGG/83/1	**8158056001**	**810635J**	48	6.35x14.29x11.9-150°(L9/10-9)
Coach	•	•	**1950309580**	**1950303320**	360	170x16.0x315		19503	4x19503	4xCW/3/1	**8103080003**	**810800J**	72	8x15x15.5-180°

Brockhouse Trailers

F11, F16, F19		•	**1903609552**	**1903604042** **1903601232**	419	178x18.6/16.7x188 178x18.2/11.5x194		19036 19037	4x19036 + 4x19037	4xIL/66/3 + 4xIL/67/3	**8158057001**	**810635J**	96	6.35x15.88x11.9-150°(L10/10-10)

Calabrese

Mugiana													
		•		**1779709550**	420	110x17.5/11.5x220		17797	8x17797		**8103080007**	**810800J**	80	8x20x15.5-180°
⊢⊣ : BPW		•	**1909409550**	**1909404040** **1909401250**	420	200x17.5/10.5x204		19094	8x19094	8xBC/97/1	**8162080001**	**810800J**	80	8x15x15.5-180°
⊢⊣ : ROR		•	**1903609552**	**1903604042** **1903601232**	419	178x18.6/16.7x188 178x18.2/11.5x194		19036 19037	4x19036 + 4x19037	4xIL/66/3 + 4xIL/67/3	**8158057001**	**810635J**	96	6.35x15.88x11.9-150°(L10/10-10)

Cardi

⊢⊣ : BPW		•	**1903209550**	**1903204040** **1903201250**	420	180x17.5/10.5x204		19032	8x19032	8xBC/98/1	**8162080001**	**810800J**	80	8x15x15.5-180°
		•	**1909409550**	**1909404040** **1909401250**	420	200x17.5/10.5x204		19094	8x19094	8xBC/97/1	**8162080001**	**810800J**	80	8x15x15.5-180°
		•	**1957409550**	**1957404040** **1957401250**	300	200x18.0/11.0x145		19574	8x19574	8xBC/80/1	**8162080001**	**810800J**	64	8x15x15.5-180°
		•		**1745609550**	420	140x18.0/11.8x204		17456	8x17456		**8103080008**	**810800J**	80	8x22x15.5-180°
		•		**1920004040**	420	160x18.0/11.0x204		19200	8x19200	8xBC/35/1	**8162080001**	**810800J**	80	8x15x15.5-180°
		•	**1520709580**		420	90x8.2x405		15207	4x15207	4xFI/79/1	**8103080003**	**810800J**	64	8x15x15.5-180°

Carenzi

		•	**1520709580**		420	90x8.2x405		15207	4x15207	4xFI/79/1	**8103080003**	**810800J**	64	8x15x15.5-180°

JURID by Honeywell
© JURID / All rights reserved 2005
© JURID / All rights reserved 2005
JURID by Honeywell

			STOCK	STOCK	∅ mm				WVA	BFMC	JURID	SUPASET	#	

Carrimore

⊢⊣ : ROR		•		1936904040	419	219x18.5/10.5x196 219x18.6/15.2x190			19369 19370	4x19369 + 4x19370	4xFU/4/2 + 4xFU/5/2	8158057001	810635J	96	6.35x15.88x11.9-150°(L10/10-10)

Castera

⊢⊣ : ROR		•		1936504042 1936509582 1936509552	419	203x18.2/11.5x194 203x18.6/15.7x188			19365 19366	4x19365 + 4x19366	4xRW/2/5 + 4xRW/1/5	8158057001	810635J	128	6.35x15.88x11.9-150°(L10/10-10)
		•		1936904040	419	219x18.5/10.5x196 219x18.6/15.2x190			19369 19370	4x19369 + 4x19370	4xFU/4/2 + 4xFU/5/2	8158057001	810635J	96	6.35x15.88x11.9-150°(L10/10-10)
⊢⊣ : SAE Dupillier *(S3315)*		•		1976003290	305	150x16.3/14.6x143 150x15.2/8.7x143			19760 19761	4x19760 + 4x19761	4xSA/36/1 + 4xSA/37/1	8103080005	810800J	48	8x18x15.5-180°
⊢⊣ : SAF Sauer		•		1928304040	420	180x19.6/16.4x189 180x19.0/12.0x194			19283 19284	4x19283 + 4x19284	4xSJ/28/1 + 4xSJ/29/1	8103080005	810800J	64	8x18x15.5-180°

Cazenave

⊢⊣ : BPW *(Trilex)*		•	1909409580	1909404040 1909401250	420	200x17.5/10.5x204			19094	8x19094	8xBC/97/1	8162080001	810800J	80	8x15x15.5-180°
⊢⊣ : BPW		•	1903209580	1903204040 1903201250	420	180x17.5/10.5x204			19032	8x19032	8xBC/98/1	8162080001	810800J	80	8x15x15.5-180°
⊢⊣ : Coder *(2E)*		•		1933803290	420	200x17.5/11.5x204			19338	8x19338	8xFT/5/1	8103080007	810800J	64	8x20x15.5-180°
⊢⊣ : Colaert *(V1/V1)*		•		1761203320	305	125x10.0x275			17612	4x17612		8102060004		48	6x13.5x11-180°
⊢⊣ : Colaert (O) : Bendix		•		1904904040	414	150x12.5x347 285x12.5x285			19049 19199	2x19049 + 2x19199	2xSA/10/1 + 2xSA/11/1	8102060005		96	6x13.5x12-180°
⊢⊣ : Colaert		•		1931503270	414	175x13.0x347 175x13.0x253			19315 19319	2x19315 + 2x19319	2xSA/32/1 + 2xSA/33/1	8102060004		112	6x13.5x11-180°
		•		1944403290	305	180x11.5x265			19444	4x19444		8103060007	810600J	64	6x15x11.5-180°
⊢⊣ : SAE Dupillier		•		1935903290	414	150x19.0/9.1x202 151x19.0/14.8x200			19359 19360	4x19359 + 4x19360		8102060009		64	6x18x12-180°

Citroën

C 25

C25D *(1.4t)*	84-95	•		571393J	256	144.9x19.7x71.8	561321J		21206	4x21049				
C25D *(1.4t)* C25E *(1.8t)*	84-95	•		361283J	254	254x57								
C25E	81-84	•		571304J	256	130x19.2x71	561159J		20787 20741	2x20787 + 2x20741				
	84-95	•		571304J	256	130x19.2x71	561321J		20787 20741	2x20787 + 2x20741				
C25E *(1.8t)*	84-95	•		571393J	290	144.9x19.7x71.8	561339J		21206	4x21049				

JURID by Honeywell
© JURID / All rights reserved 2005
© JURID / All rights reserved 2005
JURID by Honeywell

Citroën...

Jumper...

1.9D, 1.9TD, 2.0i27, 2.0i31, 2.5D31, 2.5TD27, 2.5TD31	94-	•		**571839J**		280	145x19.5x59	**561984J**			21797	4x21797			
	94-	•		**571839J**		280	145x19.5x59	**561992J**			21797	4x21797			
	94-		•	**362337J**		254	254x57								
1.9D, 1.9TD, 2.0i, 2.5D, 2.5TD *(1.4t,1t)*	99-01	•		**573060**		280	113.4x19.5x56.3	**561984J**			21627	4x21627			
2.0HDI, 2.0i, 2.2HDI, 2.8HDI *(1t - 1.4t)*	02-	•		**573113**			140.8x19x66								
2.0HDI, 2.0i, 2.2HDI, 2.8HDI*(1.8t)*	02-	•		**573114**			164.8x19x69.3								
2.0HDI, 2.0i, 2.2HDI, 2.8HDI *(1t - 1.8t)*	02-		•	**573115**			146.7x20x59.5								
2.0i35, 2.5D35, 2.5TD35	94-	•		**571840J**		300	160x19.5x62.8	**561969J**			21799	4x21799			
	94-		•	**362338J**		254	254x57								
2.0i, 2.5D, 2.5TD, 2.8HDI*(1.8t)*	99-01	•		**573061**		300	127.6x19.5x55	**561969J**			21799	4x21799			

Jumpy

1.6i, 1.9D, 1.9TD	96-	•		**571843J**		257	139.8x19x69	**562033J**			23003	4x23003			

Coder

: BPW		•	**1903209580**	**1903204040** **1903201250**		420	180x17.5/10.5x204			19032	8x19032	8xBC/98/1	**8162080001**	**810800J**	80	8x15x15.5-180°
		•	**1909409550**	**1909404040** **1909401250**		420	200x17.5/10.5x204			19094	8x19094	8xBC/97/1	**8162080001**	**810800J**	80	8x15x15.5-180°
: Coder *(2E)*		•		**1933803290**		420	200x17.5/11.5x204			19338	8x19338	8xFT/5/1	**8103080007**	**810800J**	64	8x20x15.5-180°
: Colaert		•		**1931503270**		414	175x13.0x347 175x13.0x253			19315 19319	2x19315 + 2x19319	2xSA/32/1 + 2xSA/33/1	**8102060004**		112	6x13.5x11-180°
: ROR		•	**1903609552**	**1903604042** **1903601232**		419	178x18.6/16.7x188 178x18.2/11.5x194			19036 19037	4x19036 + 4x19037	4xIL/66/3 + 4xIL/67/3	**8158057001**	**810635J**	96	6.35x15.88x11.9-150°(L10/10-10)
: ROR 15"		•	**1960409550**	**1960403290** **1960401230**		311	190x15.3/10.8x126 190x16.1/13.1x158			19604 19605	4x19604 + 4x19605	4xRW/9/2 + 4xRW/13/2	**8158057001**	**810635J**	80	6.35x15.88x11.9-150°(L10/10-10)
: ROR		•		**1936904040**		419	219x18.5/10.5x196 219x18.6/15.2x190			19369 19370	4x19369 + 4x19370	4xFU/4/2 + 4xFU/5/2	**8158057001**	**810635J**	96	6.35x15.88x11.9-150°(L10/10-10)
: SAE Dupillier		•		**1935703290**		420	150x18.0/8.2x204 150x18.0/12.0x204			19357 19358	4x19357 + 4x19358		**8103080007**	**810800J**	64	8x20x15.5-180°
: SAF Sauer		•		**1928304040**		420	180x19.6/16.4x189 180x19.0/12.0x194			19283 19284	4x19283 + 4x19284	4xSJ/28/1 + 4xSJ/29/1	**8103080005**	**810800J**	64	8x18x15.5-180°

© JURID / All rights reserved 2005

© JURID / All rights reserved 2005

			→ STOCK	STOCK →	⌀ mm			WVA	BFMC	JURID	SUPASET	#	

Colaert

V1/V1		•	**1761203320**	305	125x10.0x275		17612	4x17612		**8102060004**		48	6x13.5x11-180°
V1/V3		•	**272125130329**	305	125x13.0x272								
V2/V6		•	**1940503290**	305	200x12.0x141		19405	8x19405		**8103080003**	**810800J**	80	8x15x15.5-180°
W4 (◎ *: Bendix)*		•	**1724703320**	406	100x10.0x346 100x10.0x284		17247 17305	2x17247 + 2x17305	2xSA/8/1 + 2xSA/9/1	**8102050010**	**810500J**	52	5x13.5x11-180°(CT/BK)
W5 (◎ *: Bendix)*		•	**1730703320**	406	125x10.0x346 125x10.0x284		17307 17308	2x17307 + 2x17308	2xBT/54/1 + 2xBT/55/1	**8102050009**	**810500J**	116	5x13x9.5-180°
W6/2		•	**325160175329**	420	160x17.5x325								
W6 (◎ *: Bendix)*		•	**1904904040**	414	150x12.5x347 285x12.5x285		19049 19199	2x19049 + 2x19199	2xSA/10/1 + 2xSA/11/1	**8102060005**		96	6x13.5x12-180°
W7 (◎ *: Bendix)*		•	**1931503270**	414	175x13.0x347 175x13.0x253		19315 19319	2x19315 + 2x19319	2xSA/32/1 + 2xSA/33/1	**8102060004**		112	6x13.5x11-180°
		•	**1947903290**	414	175x15.8/19.0/11.9x345 175x17.2/19.0/15.8x252		19479 19480	2x19479 + 2x19480	2xLF/100/1 + 2xLF/101/1	**8103060008**		112	6x16x12-180°
W8/2		•	**325200175329**	420	200x17.5x325								
W8 (◎ *: Bendix)*		•	**1940603290**	414	200x17.2/19.0/15.8x252 200x15.8/19.0/11.9x345		19406 19407	2x19406 + 2x19407	2xLF/102/1 + 2xLF/103/1	**8103060008**		82	6x16x12-180°
⊢⊣ **: BPW** *(EHZ/S)*		•	**1909404040** **1909409550** **1909401250**	420	200x17.5/10.5x204		19094	8x19094	8xBC/97/1	**8162080001**	**810800J**	80	8x15x15.5-180°
⊢⊣ **: BPW**		•	**1903204040** **1903209580** **1903201250**	420	180x17.5/10.5x204		19032	8x19032	8xBC/98/1	**8162080001**	**810800J**	80	8x15x15.5-180°
⊢⊣ **: SAE Dupillier** *(S3018(V2/V5))*		•	**1944403290**	305	180x11.5x265		19444	4x19444		**8103060007**	**810600J**	64	6x15x11.5-180°
◎ **: Bendix**		•	**1951103270**	414	150x17.2/19.0/15.8x252 150x15.8/19.0/11.9x345		19511 19512	2x19511 + 2x19512	2xLF/104/1 + 2xLF/105/1	**8103060008**		92	6x16x12-180°

Commer

C

CE15, CE8, VB8, VC8	68-76	•	**1754609580**		394	127x12.7x360		17546	4x17546	4xGG/118/1	**8158056001**	**810635J**	48	6.35x14.29x11.9-150°(L9/10-9)
CE8, VB8, VC8	68-76	•		**1911109530**	394	177.8x12.7x358.4		19111	4x19111	4xGG/92/1	**8158056001**	**810635J**	72	6.35x14.29x11.9-150°(L9/10-9)

V

VC8	68-76	•	**1754609580**		394	127x12.7x360		17546	4x17546	4xGG/118/1	**8158056001**	**810635J**	48	6.35x14.29x11.9-150°(L9/10-9)
	68-76	•		**1911109530**	394	177.8x12.7x358.4		19111	4x19111	4xGG/92/1	**8158056001**	**810635J**	72	6.35x14.29x11.9-150°(L9/10-9)

Crane Fruehauf

DRA

10t		•	**1903609550**	**1903604040** **1903601230**	419	178x19.0/16.0x189 178x18.2/11.5x194		19036 19037	4x19036 + 4x19037	4xRW/5/4 + 4xRW/6/4	**8103050014**	**810500J**	96	5x16x12-180°
20t		•		**1907203320** **1907209530**	394	152x12.7x362		19072	4x19072	4xGG/83/1	**8158056001**	**810635J**	48	6.35x14.29x11.9-150°(L9/10-9)
14t,15t,30t		•		**1911109530**	394	177.8x12.7x358.4		19111	4x19111	4xGG/92/1	**8158056001**	**810635J**	72	6.35x14.29x11.9-150°(L9/10-9)
⊢⊣ **: ROR**		•	**1903609552**	**1903604042** **1903601232**	419	178x18.6/16.7x188 178x18.2/11.5x194		19036 19037	4x19036 + 4x19037	4xIL/66/3 + 4xIL/67/3	**8158057001**	**810635J**	96	6.35x15.88x11.9-150°(L10/10-10)
⊢⊣ **: ROR** ◎ **: 311x190 Low Loader**		•	**1960409550**	**1960403290** **1960401230**	311	190x15.3/10.8x126 190x16.1/13.1x158		19604 19605	4x19604 + 4x19605	4xRW/9/2 + 4xRW/13/2	**8158057001**	**810635J**	80	6.35x15.88x11.9-150°(L10/10-10)

© JURID / All rights reserved 2005

© JURID / All rights reserved 2005

			STOCK / ~~STOCK~~	⌀ mm			WVA	BFMC	JURID / SUPASET #	

Crane Fruehauf...

...

(O) : Knorr *(SB 7000)* **22.5"**	98-	•		**2910815390**		430	248x30x109	**569100J**		29108	4x29108					
(O) : Wabco *(PAN22)* **22.5"**	98-	•				430		**569100J**								
Draw Bar 16t,Tanker,⟷ : Propar		•	**1903609550**	**1903604040** **1903601230**		419	178x19.0/16.0x189 178x18.2/11.5x194			19036 19037	4x19036 + 4x19037	4xRW/5/4 + 4xRW/6/4	**8103050014**	**810500J**	96	5x16x12-180°
Draw Bar 20t,Flat Platform, ⟷ : ROR		•		**1936904040**		419	219x18.5/10.5x196 219x18.6/15.2x190			19369 19370	4x19369 + 4x19370	4xFU/4/2 + 4xFU/5/2	**8158057001**	**810635J**	96	6.35x15.88x11.9-150°(L10/10-10)

Daf

⟷ : BPW *(EHZ/S)*		•	**1909409580**	**1909404040** **1909401250**		420	200x17.5/10.5x204			19094	8x19094	8xBC/97/1	**8162080001**	**810800J**	80	8x15x15.5-180°
⟷ : BPW		•	**1903209580**	**1903204040** **1903201250**		420	180x17.5/10.5x204			19032	8x19032	8xBC/98/1	**8162080001**	**810800J**	80	8x15x15.5-180°
		•		**1920004040**		420	160x18.0/11.0x204			19200	8x19200	8xBC/35/1	**8162080001**	**810800J**	80	8x15x15.5-180°
		•		**1939704040**		300	200x12.5/10.5x141			19397	8x19397		**8162080001**	**810800J**	64	8x15x15.5-180°
		•	**1903609552**	**1903604042** **1903601232**		419	178x18.6/16.7x188 178x18.2/11.5x194			19036 19037	4x19036 + 4x19037	4xIL/66/3 + 4xIL/67/3	**8158057001**	**810635J**	96	6.35x15.88x11.9-150°(L10/10-10)
		•		**1915005700** **1915009530**		419	152.4x18.5/9.5x211 152.4x18.5/13.5x218			19150 19151	4x19150 + 4x19151	4xDF/20/3 + 4xDF/21/3	**8158057001**	**810635J**	80	6.35x15.88x11.9-150°(L10/10-10)
		•		**1936904040**		419	219x18.5/10.5x196 219x18.6/15.2x190			19369 19370	4x19369 + 4x19370	4xFU/4/2 + 4xFU/5/2	**8158057001**	**810635J**	96	6.35x15.88x11.9-150°(L10/10-10)

200

V400, V817 *(3.5t)*	87-	•		**571822J**			126.7x18x72.6			20904	4x20904					
VA200, VS200	87-88	•		**571233J**			88.5x15x70.5			20364 20365	2x20364 + 2x20365					
	89-	•		**571250J**			105x17.8x75			20359	4x20359					

400

V400, V817 *(3.5t)*	87-	•		**571822J**			126.7x18x72.6			20904	4x20904					
VA400, VD400, VH400, VS400	87-	•		**571250J**			105x17.8x75			20359	4x20359					

1000

FA	87-92	•		**2901709560**		312	191x23x87	**567123J**		29017	4x29017					
	87-92		**1790009580**	**1790003270**		325	146.5x12.1x301 146.5x12.1x251			17900 17901	2x17900 + 2x17901	2xMP/39/1 + 2xMP/40/1	**8103080007**	**810800J**	44	8x20x15.5-180°

1100

F1100	78-86	•		**1780401820**		394	127x12.7x354			17804	4x17804	4xDO/80/2	**8102060005**		64	6x13.5x12-180°
	78-86			**1962203320**		394	152x12.7x354			19622	4x19622	4xLH/82/2	**8102060004**		64	6x13.5x11-180°

© JURID / All rights reserved 2005

© JURID / All rights reserved 2005

			STOCK	STOCK	⌀ mm				WVA	BFMC	JURID	SUPASET	#			

Daf...

...

1100...

FA, FT1100 *(DNTD,DT)*	78-	•		**1782705380** **1782709530**	325	120x12.5x251 120x12.5x209		17827 17828	2x17827 + 2x17828	2xSA/28/1 + 2xSA/29/1	**8102050009**	**810500J**	60	5x13x9.5-180°
	78-		•	**1962005380**	325	150x12.5x209.4 150x12.5x251.3		19620 19621	2x19620 + 2x19621	2xSA/30/1 + 2xSA/31/1	**8102050009**	**810500J**	64	5x13x9.5-180°

1200

F1200	76-86	•		**1758203320**	356	100x10.0x349 100x10.0x322		17582 17805	2x17582 + 2x17805	2xSA/24/1 + 2xBT/53/1	**8102050009**	**810500J**	64	5x13x9.5-180°
	76-86		•	**1758203320**	356	100x10.0x349 100x10.0x322		17582 17805	2x17582 + 2x17805	2xSA/24/1 + 2xBT/53/1	**8102050009**	**810500J**	64	5x13x9.5-180°
FA *(DNTD,DT)*	78-	•		**1782705380** **1782709530**	325	120x12.5x251 120x12.5x209		17827 17828	2x17827 + 2x17828	2xSA/28/1 + 2xSA/29/1	**8102050009**	**810500J**	60	5x13x9.5-180°
	78-		•	**1962005380**	325	150x12.5x209.4 150x12.5x251.3		19620 19621	2x19620 + 2x19621	2xSA/30/1 + 2xSA/31/1	**8102050009**	**810500J**	64	5x13x9.5-180°

1300

FA1300 *(DNT)*	87-89	•	•	**1992305380**	360	170x16.1/12.4x354.5		19923	4x19923	4xGG/211/1	**8158055001**	**810635J**	88	6.35x12.7x11.9-150°(L8/10-8)
FA1300, F *(DF,G100)*	76-86	•		**1780401820**	394	127x12.7x354		17804	4x17804	4xDO/80/2	**8102060005**		64	6x13.5x12-180°
	76-86		•	**1962203320**	394	152x12.7x354		19622	4x19622	4xLH/82/2	**8102060004**		64	6x13.5x11-180°

1400

FA, F *(G 130)*	76-86	•		**1780401820**	394	127x12.7x354		17804	4x17804	4xDO/80/2	**8102060005**		64	6x13.5x12-180°
	76-86		•	**1962203320**	394	152x12.7x354		19622	4x19622	4xLH/82/2	**8102060004**		64	6x13.5x11-180°

1500

FA, F *(G 130)*	76-86	•		**1780401820**	394	127x12.7x354		17804	4x17804	4xDO/80/2	**8102060005**		64	6x13.5x12-180°
	76-86		•	**1962203320**	394	152x12.7x354		19622	4x19622	4xLH/82/2	**8102060004**		64	6x13.5x11-180°

1600

FA *(DF,DT,DTC,DTD)*	72-89		•	**1915005700** **1915009530**	419	152.4x18.5/9.5x211 152.4x18.5/13.5x218		19150 19151	4x19150 + 4x19151	4xDF/20/3 + 4xDF/21/3	**8158057001**	**810635J**	80	6.35x15.88x11.9-150°(L10/10-10)
FAS, FAT **FA** *(DF,DT,DTC,DTD)*	72-89	•		**1738305700**	406	102x19.2/10.8x203 102x19.3/15.2x209		17383 17384	4x17383 + 4x17384	4xDF/10/3 + 4xDF/11/3	**8158057001**	**810635J**	80	6.35x15.88x11.9-150°(L10/10-10)
FA, FAS, FAT **FM** *(DF,DT)*	72-89		•	**1726305700**	419	127x18.5/9.4x211 127x18.5/13.8x218		17263 17264	4x17263 + 4x17264	4xDF/22/2 + 4xDF/23/2	**8158057001**	**810635J**	80	6.35x15.88x11.9-150°(L10/10-10)
FA, FT *(DT)* **FM** *(DF,DT)*	80-89	•		**1738305700**	406	102x19.2/10.8x203 102x19.3/15.2x209		17383 17384	4x17383 + 4x17384	4xDF/10/3 + 4xDF/11/3	**8158057001**	**810635J**	80	6.35x15.88x11.9-150°(L10/10-10)
FA, FT *(DT)*	80-89		•	**1732405700**	406	127x19.3/15.0x209 127x19.2/10.8x203		17324 17325	4x17324 + 4x17325	4xDF/15/3 + 4xDF/14/3	**8158057001**	**810635J**	80	6.35x15.88x11.9-150°(L10/10-10)
FM *(DF,DT)*	72-79	•		**1732405700**	406	127x19.3/15.0x209 127x19.2/10.8x203		17324 17325	4x17324 + 4x17325	4xDF/15/3 + 4xDF/14/3	**8158057001**	**810635J**	80	6.35x15.88x11.9-150°(L10/10-10)

1700

FA1700 *(DNT)*	87-89	•	•	**1992305380**	360	170x16.1/12.4x354.5		19923	4x19923	4xGG/211/1	**8158055001**	**810635J**	88	6.35x12.7x11.9-150°(L8/10-8)
F *(DF,G100)*	76-86	•		**1780401820**	394	127x12.7x354		17804	4x17804	4xDO/80/2	**8102060005**		64	6x13.5x12-180°
	76-86		•	**1962203320**	394	152x12.7x354		19622	4x19622	4xLH/82/2	**8102060004**		64	6x13.5x11-180°

1800

FAV *(DT)*	76-86		•	**1915005700** **1915009530**	419	152.4x18.5/9.5x211 152.4x18.5/13.5x218		19150 19151	4x19150 + 4x19151	4xDF/20/3 + 4xDF/21/3	**8158057001**	**810635J**	80	6.35x15.88x11.9-150°(L10/10-10)

© JURID / All rights reserved 2005

© JURID / All rights reserved 2005

D

			STOCK	STOCK	⌀ mm			WVA	BFMC	JURID	SUPASET	#	
Daf...													
1900													
FA1905	87-	•	**1925609580** **1925609530**	**1925605700** **1925601230** **1925601230**	419	178x18.5/9.4x211 178x18.5/13.8x218		19256 19260	4x19256 + 4x19260	4xDF/16/1 + 4xDF/17/2	**8158057001**	**810635J**	112	6.35x15.88x11.9-150°(L10/10-10)
FA, FA1905, FT1900	89-	•	**1901009530**	**1901005700** **1901001230**	420	150x21.3/17.8x176 150x21.2/12.9x179		19010 19011	4x19010 + 4x19011	4xDF/45/1 + 4xDF/44/1	**8158058001**	**810635J**	64	6.35x17.5x11.9-150°(L11/10-11)
FA, FA1905, FT1900, FT1905	87-89	•	**1990009580**	**1990005700** **1990001230**	420	150x19.1/16.8x176 150x18.5/12.8x179		19900 19901	4x19900 + 4x19901	4xDF/34/1 + 4xDF/35/1	**8158057001**	**810635J**	64	6.35x15.88x11.9-150°(L10/10-10)
FA, FT1900, FT1905	87-89	•	**1988809530**	**1988805700** **1988801230**	420	175x19.0/11.8x179 175x19.0/16.2x176		19888 19889	4x19888 + 4x19889	4xDF/36/1 + 4xDF/37/1	**8158057001**	**810635J**	96	6.35x15.88x11.9-150°(L10/10-10)
FT1905	89-	•		**1905205700** **1905209530**	420	175x21.2/12.9x179 175x21.3/17.8x176		19052 19055	4x19052 + 4x19055	4xDF/46/1 + 4xDF/47/1	**8158058001**	**810635J**	96	6.35x17.5x11.9-150°(L11/10-11)
2000													
FA2000, FA2005, FAR2000, FAR2005, FAS2000, FAS2005, FAT2000, FAT2005, FM2000, FM2005, FT2000, FT2005	72-89	•		**1915005700** **1915009530**	419	152.4x18.5/9.5x211 152.4x18.5/13.5x218		19150 19151	4x19150 + 4x19151	4xDF/20/3 + 4xDF/21/3	**8158057001**	**810635J**	80	6.35x15.88x11.9-150°(L10/10-10)
FA2000, FA2005, FAR2000, FAR2005, FAS2000, FAS2005, FAT2000, FAT2005, FT2000, FT2005	72-89	•	**1925609580** **1925609530**	**1925605700** **1925601230** **1925601230**	419	178x18.5/9.4x211 178x18.5/13.8x218		19256 19260	4x19256 + 4x19260	4xDF/16/1 + 4xDF/17/2	**8158057001**	**810635J**	112	6.35x15.88x11.9-150°(L10/10-10)
FA2000, FA2005, FAS2000, FAS2005, FAT2000, FAT2005, FM2000, FM2005, FT2000, FT2005	72-89	•		**1726305700**	419	127x18.5/9.4x211 127x18.5/13.8x218		17263 17264	4x17263 + 4x17264	4xDF/22/2 + 4xDF/23/2	**8158057001**	**810635J**	80	6.35x15.88x11.9-150°(L10/10-10)
FA2000, FA2005, FAS2000, FAS2005, FAT2000, FAT2005, FM2000, FM2005, FT2000, FT2005, FTS2000, FTS2005, FTT2000, FTT2005	72-89	•		**1732405700**	406	127x19.3/15.0x209 127x19.2/10.8x203		17324 17325	4x17324 + 4x17325	4xDF/15/3 + 4xDF/14/3	**8158057001**	**810635J**	80	6.35x15.88x11.9-150°(L10/10-10)
FA2000, FAR2000, FAS2000, FAT2000, FM2000, FT2000 *(Hub centering)*	72-89	• •		**1915005700** **1915009530**	419	152.4x18.5/9.5x211 152.4x18.5/13.5x218		19150 19151	4x19150 + 4x19151	4xDF/20/3 + 4xDF/21/3	**8158057001**	**810635J**	80	6.35x15.88x11.9-150°(L10/10-10)
FA2000, FAR2000, FAS2000, FAT2000, FM2000, FT2000	89-	•		**1902405700**	419	152.4x21.2/10.6x211 152.4x21.3/15.4x218		19024 19031	4x19024 + 4x19031	4xDF/42/1 + 4xDF/43/1	**8158058001**	**810635J**	80	6.35x17.5x11.9-150°(L11/10-11)
FA2000, FT2005	72-89	•		**1738305700**	406	102x19.2/10.8x203 102x19.3/15.2x209		17383 17384	4x17383 + 4x17384	4xDF/10/3 + 4xDF/11/3	**8158057001**	**810635J**	80	6.35x15.88x11.9-150°(L10/10-10)
2100													
FA2100, FA2105, FAR2100, FAR2105, FAR2200, FAR2205, FAS2100, FAS2105, FAT2100, FAT2105, FM2100, FM2105, FT2100, FT2105	72-89	•		**1915005700** **1915009530**	419	152.4x18.5/9.5x211 152.4x18.5/13.5x218		19150 19151	4x19150 + 4x19151	4xDF/20/3 + 4xDF/21/3	**8158057001**	**810635J**	80	6.35x15.88x11.9-150°(L10/10-10)
FA2100, FA2105, FAR2100, FAR2105, FAR2200, FAS2100, FAS2105, FAT2100, FAT2105, FT2100, FT2105	72-89	•	**1925609580** **1925609530**	**1925605700** **1925601230** **1925601230**	419	178x18.5/9.4x211 178x18.5/13.8x218		19256 19260	4x19256 + 4x19260	4xDF/16/1 + 4xDF/17/2	**8158057001**	**810635J**	112	6.35x15.88x11.9-150°(L10/10-10)
FA2100, FA2105, FAR2100, FAR2105, FAS2100, FAS2105, FAT2100, FAT2105	89-	•		**1905205700** **1905209530**	420	175x21.2/12.9x179 175x21.3/17.8x176		19052 19055	4x19052 + 4x19055	4xDF/46/1 + 4xDF/47/1	**8158058001**	**810635J**	96	6.35x17.5x11.9-150°(L11/10-11)
FA2100, FA2105, FAR2100, FAR2105, FAS2100, FAS2105, FAT2100, FAT2105, FM2100, FM2105, FT2100, FT2105 *(Hub centering)*	72-89	• •		**1915005700** **1915009530**	419	152.4x18.5/9.5x211 152.4x18.5/13.5x218		19150 19151	4x19150 + 4x19151	4xDF/20/3 + 4xDF/21/3	**8158057001**	**810635J**	80	6.35x15.88x11.9-150°(L10/10-10)
FA2100, FA2105, FAR2100, FAR2105, FAS2100, FAS2105, FAT2100, FAT2105, FM2100, FM2105, FT2100, FT2105	89-	•		**1902405700**	419	152.4x21.2/10.6x211 152.4x21.3/15.4x218		19024 19031	4x19024 + 4x19031	4xDF/42/1 + 4xDF/43/1	**8158058001**	**810635J**	80	6.35x17.5x11.9-150°(L11/10-11)

© JURID / All rights reserved 2005

© JURID / All rights reserved 2005

			STOCK	STOCK	⌀ mm			WVA	BFMC	JURID	SUPASET	#	
Daf…													
2100…													
FA2100, FA2105, FAS2100, FAS2105, FAT2100, FAT2105, FT2100, FT2105, FTS2100, FTS2105, FTT2100, FTT2105	72-89	•		**1732405700**	406	127x19.3/15.0x209 127x19.2/10.8x203		17324 17325	4x17324 + 4x17325	4xDF/15/3 + 4xDF/14/3	**8158057001**	**810635J**	80	6.35x15.88x11.9-150°(L10/10-10)
FA2100, FD2100	87-89	•	**1990009580**	**1990005700** **1990001230**	420	150x19.1/16.8x176 150x18.5/12.8x179		19900 19901	4x19900 + 4x19901	4xDF/34/1 + 4xDF/35/1	**8158057001**	**810635J**	64	6.35x15.88x11.9-150°(L10/10-10)
	87-89	•	**1988809530**	**1988805700** **1988801230**	420	175x19.0/11.8x179 175x19.0/16.2x176		19888 19889	4x19888 + 4x19889	4xDF/36/1 + 4xDF/37/1	**8158057001**	**810635J**	96	6.35x15.88x11.9-150°(L10/10-10)
FA2105 *(Hub centering)*	83-89	•	**1925609580** **1925609530**	**1925605700** **1925601230** **1925601230**	419	178x18.5/9.4x211 178x18.5/13.8x218		19256 19260	4x19256 + 4x19260	4xDF/16/1 + 4xDF/17/2	**8158057001**	**810635J**	112	6.35x15.88x11.9-150°(L10/10-10)
FAR2100, FAS2100, FAT2100 *(6x2,6x4)*	89-	•		**1902405700**	419	152.4x21.2/10.6x211 152.4x21.3/15.4x218		19024 19031	4x19024 + 4x19031	4xDF/42/1 + 4xDF/43/1	**8158058001**	**810635J**	80	6.35x17.5x11.9-150°(L11/10-11)
FM2000	72-89	•		**1726305700**	419	127x18.5/9.4x211 127x18.5/13.8x218		17263 17264	4x17263 + 4x17264	4xDF/22/2 + 4xDF/23/2	**8158057001**	**810635J**	80	6.35x15.88x11.9-150°(L10/10-10)
2200													
FA2200, FA2205, FAR2200, FAR2205, FAS2200, FAS2205, FAT2200, FAT2205, FM2200, FM2205, FT2200, FT2205	72-89	•		**1915005700** **1915009530**	419	152.4x18.5/9.5x211 152.4x18.5/13.5x218		19150 19151	4x19150 + 4x19151	4xDF/20/3 + 4xDF/21/3	**8158057001**	**810635J**	80	6.35x15.88x11.9-150°(L10/10-10)
FA2200, FA2205, FAR2200, FAR2205, FAS2200, FAS2205, FAT2200, FAT2205, FT2200, FT2205	72-89	•	**1925609580** **1925609530**	**1925605700** **1925601230** **1925601230**	419	178x18.5/9.4x211 178x18.5/13.8x218		19256 19260	4x19256 + 4x19260	4xDF/16/1 + 4xDF/17/2	**8158057001**	**810635J**	112	6.35x15.88x11.9-150°(L10/10-10)
FA2200, FA2205, FAS2200, FAS2205, FAT2200, FAT2205, FM2200, FM2205, FT2200, FT2205	72-89	•		**1726305700**	419	127x18.5/9.4x211 127x18.5/13.8x218		17263 17264	4x17263 + 4x17264	4xDF/22/2 + 4xDF/23/2	**8158057001**	**810635J**	80	6.35x15.88x11.9-150°(L10/10-10)
FA2200, FA2205, FAS2200, FAS2205, FAT2200, FAT2205, FT2200, FT2205, FTS2200, FTS2205, FTT2200, FTT2205	72-89	•		**1732405700**	406	127x19.3/15.0x209 127x19.2/10.8x203		17324 17325	4x17324 + 4x17325	4xDF/15/3 + 4xDF/14/3	**8158057001**	**810635J**	80	6.35x15.88x11.9-150°(L10/10-10)
FAT2200, FAT2205	72-89	•		**1915005700** **1915009530**	419	152.4x18.5/9.5x211 152.4x18.5/13.5x218		19150 19151	4x19150 + 4x19151	4xDF/20/3 + 4xDF/21/3	**8158057001**	**810635J**	80	6.35x15.88x11.9-150°(L10/10-10)
2300													
FA2300	72-89	•		**1915005700** **1915009530**	419	152.4x18.5/9.5x211 152.4x18.5/13.5x218		19150 19151	4x19150 + 4x19151	4xDF/20/3 + 4xDF/21/3	**8158057001**	**810635J**	80	6.35x15.88x11.9-150°(L10/10-10)
FA2300 *(Turbo)*	89-	•	**1906309530**	**1906305700** **1906301230**	420	200x21.1/12.9x179 200x21.3/17.8x176		19063 19064	4x19063 + 4x19064	4xDF/48/1 + 4xDF/49/1	**8158058001**	**810635J**	128	6.35x17.5x11.9-150°(L11/10-11)
FA2300	89-	•		**1902405700**	419	152.4x21.2/10.6x211 152.4x21.3/15.4x218		19024 19031	4x19024 + 4x19031	4xDF/42/1 + 4xDF/43/1	**8158058001**	**810635J**	80	6.35x17.5x11.9-150°(L11/10-11)
FA2300, FA2305, FAD2300, FAD2305, FAG2300, FAG2305, FAR2300, FAR2305, FAT2300, FAT2305, FT2300, FT2305	72-89	•	**1925609580** **1925609530**	**1925605700** **1925601230** **1925601230**	419	178x18.5/9.4x211 178x18.5/13.8x218		19256 19260	4x19256 + 4x19260	4xDF/16/1 + 4xDF/17/2	**8158057001**	**810635J**	112	6.35x15.88x11.9-150°(L10/10-10)
	72-89	•		**1905205700** **1905209530**	420	175x21.2/12.9x179 175x21.3/17.8x176		19052 19055	4x19052 + 4x19055	4xDF/46/1 + 4xDF/47/1	**8158058001**	**810635J**	96	6.35x17.5x11.9-150°(L11/10-11)
FA2300, FA2305, FAG2300, FAG2305, FAR2300, FAR2305, FAT2300, FAT2305, FT2300, FT2305 *(Stud centering)*	72-89	•		**1915005700** **1915009530**	419	152.4x18.5/9.5x211 152.4x18.5/13.5x218		19150 19151	4x19150 + 4x19151	4xDF/20/3 + 4xDF/21/3	**8158057001**	**810635J**	80	6.35x15.88x11.9-150°(L10/10-10)
FA2300, FAR2300, FAT2300 *(hub centering)*	89-	•		**1902405700**	419	152.4x21.2/10.6x211 152.4x21.3/15.4x218		19024 19031	4x19024 + 4x19031	4xDF/42/1 + 4xDF/43/1	**8158058001**	**810635J**	80	6.35x17.5x11.9-150°(L11/10-11)
2500													
FA2500, FA2505	89-	•		**1905205700** **1905209530**	420	175x21.2/12.9x179 175x21.3/17.8x176		19052 19055	4x19052 + 4x19055	4xDF/46/1 + 4xDF/47/1	**8158058001**	**810635J**	96	6.35x17.5x11.9-150°(L11/10-11)

JURID by Honeywell

© JURID / All rights reserved 2005

© JURID / All rights reserved 2005

JURID by Honeywell

			STOCK →	← STOCK	⌀ mm				WVA	BFMC	JURID	SUPASET	#			
Daf…																
2500…																
FA2500, FA2505, FA2525, FAD2500, FAD2505, FAD2525, FAG2500, FAG2505, FAG2525, FAR2500, FAR2505, FAR2525, FAT2500, FAT2505, FAT2525, FT2500, FT2505, FT2525	72-89	•	**1925609580 1925609530**	**1925605700 1925601230 1925601230**	419	178x18.5/9.4x211 178x18.5/13.8x218		19256 19260	4x19256 + 4x19260	4xDF/16/1 + 4xDF/17/2	**8158057001**	**810635J**	112	6.35x15.88x11.9-150°(L10/10-10)
	72-89	•		**1905205700 1905209530**	420	175x21.2/12.9x179 175x21.3/17.8x176		19052 19055	4x19052 + 4x19055	4xDF/46/1 + 4xDF/47/1	**8158058001**	**810635J**	96	6.35x17.5x11.9-150°(L11/10-11)
FAD2525 **FA2500, FA2505, FA2525, FAG2500, FAG2505, FAG2525, FAR2500, FAR2505, FAR2525, FAT2500, FAT2505, FAT2525, FT2500, FT2505, FT2525** *(Stud centering)*	72-89	•		**1915005700 1915009530**	419	152.4x18.5/9.5x211 152.4x18.5/13.5x218		19150 19151	4x19150 + 4x19151	4xDF/20/3 + 4xDF/21/3	**8158057001**	**810635J**	80	6.35x15.88x11.9-150°(L10/10-10)
FA2500, FA2505, FAR2500, FAR2505, FAS2500, FAS2505, FAT2500, FAT2505 *(hub centering)*	89-	•		**1902405700**	419	152.4x21.2/10.6x211 152.4x21.3/15.4x218		19024 19031	4x19024 + 4x19031	4xDF/42/1 + 4xDF/43/1	**8158058001**	**810635J**	80	6.35x17.5x11.9-150°(L11/10-11)
2600																
	-89	•		**1726305700**	419	127x18.5/9.4x211 127x18.5/13.8x218		17263 17264	4x17263 + 4x17264	4xDF/22/2 + 4xDF/23/2	**8158057001**	**810635J**	80	6.35x15.88x11.9-150°(L10/10-10)
	-89	•	**1925609580 1925609530**	**1925605700 1925601230 1925601230**	419	178x18.5/9.4x211 178x18.5/13.8x218		19256 19260	4x19256 + 4x19260	4xDF/16/1 + 4xDF/17/2	**8158057001**	**810635J**	112	6.35x15.88x11.9-150°(L10/10-10)
2700																
FA, FAT, FT	11/89-	•		**1902405700**	419	152.4x21.2/10.6x211 152.4x21.3/15.4x218		19024 19031	4x19024 + 4x19031	4xDF/42/1 + 4xDF/43/1	**8158058001**	**810635J**	80	6.35x17.5x11.9-150°(L11/10-11)
FAT, FA, FT *(Reinforced)*	11/89-	•	**1906309530**	**1906305700 1906301230**	420	200x21.1/12.9x179 200x21.3/17.8x176		19063 19064	4x19063 + 4x19064	4xDF/48/1 + 4xDF/49/1	**8158058001**	**810635J**	128	6.35x17.5x11.9-150°(L11/10-11)
2800																
2800 *(↔ : Eaton)*		•		**1989603270 1989609530**	420	178x18.5x197		19896	8x19896	8xAX/14/6	**8158056001**	**810635J**	112	6.35x14.29x11.9-150°(L9/10-9)
F 2800 *(ATI)*	86-89	•	**1989009530**	**1989005700 1989001230**	420	200x19.0/11.8x179 200x19.0/16.2x176		19890 19891	4x19890 + 4x19891	4xDF/32/1 + 4xDF/33/1	**8158057001**	**810635J**	128	6.35x15.88x11.9-150°(L10/10-10)
FA2800, FA2805, FA2825, FAD2800, FAD2805, FAD2825, FAS2800, FAS2805, FAS2825, FAT2800, FAT2805, FAT2825, FT2800, FT2805, FT2825, FTS2800, FTS2805, FTS2825, FTT2800, FTT2805, FTT2825 *(Stud centering)*	72-89	• •		**1915005700 1915009530**	419	152.4x18.5/9.5x211 152.4x18.5/13.5x218		19150 19151	4x19150 + 4x19151	4xDF/20/3 + 4xDF/21/3	**8158057001**	**810635J**	80	6.35x15.88x11.9-150°(L10/10-10)
	72-89	•		**1915005700 1915009530**	419	152.4x18.5/9.5x211 152.4x18.5/13.5x218		19150 19151	4x19150 + 4x19151	4xDF/20/3 + 4xDF/21/3	**8158057001**	**810635J**	80	6.35x15.88x11.9-150°(L10/10-10)
FA2800, FA2805, FA2825, FAD2800, FAD2805, FAD2825, FAS2800, FAS2805, FAS2825, FAT2800, FAT2805, FAT2825, FT2800, FT2805, FT2825, FTS2800, FTS2805, FTS2825, FTT2800, FTT2805, FTT2825	72-89	•	**1925609580 1925609530**	**1925605700 1925601230 1925601230**	419	178x18.5/9.4x211 178x18.5/13.8x218		19256 19260	4x19256 + 4x19260	4xDF/16/1 + 4xDF/17/2	**8158057001**	**810635J**	112	6.35x15.88x11.9-150°(L10/10-10)
FT2800, FT2805 **FA** *(Top Sleeper)* **FTDKV** *(Top Sleeper)*	86-89	•		**1961705700 1961703270**	419	203x18.5/9.4x211 203x18.5/15.8x175.6		19617 19911	4x19617 + 4x19911	4xDF/30/1 + 4xDF/31/1	**8158057001**	**810635J**	144	6.35x15.88x11.9-150°(L10/10-10)

© JURID / All rights reserved 2005

© JURID / All rights reserved 2005

				→STOCK	STOCK→	⌀ mm				WVA	BFMC	JURID	SUPASET	#				
Daf…																		
2900…																		
FA, FAT, FT	11/89-	•			**1902405700**	419	152.4x21.2/10.6x211 152.4x21.3/15.4x218			19024 19031	4x19024 + 4x19031	4xDF/42/1 + 4xDF/43/1	**8158058001**	**810635J**	80	6.35x17.5x11.9-150°(L11/10-11)	
FAT, FA, FT *(Reinforced)*	11/89-		•	**1906309530**	**1906305700** **1906301230**	420	200x21.1/12.9x179 200x21.3/17.8x176			19063 19064	4x19063 + 4x19064	4xDF/48/1 + 4xDF/49/1	**8158058001**	**810635J**	128	6.35x17.5x11.9-150°(L11/10-11)	
3200																		
FA3200, FAD3200, FT3200 **FA3225, FAD3225, FT3225** *(ATI)*	11/89-	•			**1902405700**	419	152.4x21.2/10.6x211 152.4x21.3/15.4x218			19024 19031	4x19024 + 4x19031	4xDF/42/1 + 4xDF/43/1	**8158058001**	**810635J**	80	6.35x17.5x11.9-150°(L11/10-11)	
	11/89-		•	**1906309530**	**1906305700** **1906301230**	420	200x21.1/12.9x179 200x21.3/17.8x176			19063 19064	4x19063 + 4x19064	4xDF/48/1 + 4xDF/49/1	**8158058001**	**810635J**	128	6.35x17.5x11.9-150°(L11/10-11)	
FT3200KS	90-	•		**1990009580**	**1990005700** **1990001230**	420	150x19.1/16.8x176 150x18.5/12.8x179			19900 19901	4x19900 + 4x19901	4xDF/34/1 + 4xDF/35/1	**8158057001**	**810635J**	64	6.35x15.88x11.9-150°(L10/10-10)	
	90-		•	**1989009530**	**1989005700** **1989001230**	420	200x19.0/11.8x179 200x19.0/16.2x176			19890 19891	4x19890 + 4x19891	4xDF/32/1 + 4xDF/33/1	**8158057001**	**810635J**	128	6.35x15.88x11.9-150°(L10/10-10)	
3300																		
FA3300, FA3305, FA3325, FAD3300, FAD3305, FAD3325, FAG3300, FAG3305, FAG3325, FAR3300, FAR3305, FAR3325, FAT3300, FAT3305, FAT3325, FT3300, FT3305, FT3325, FTG3300, FTG3305, FTG3325, FTS3300, FTS3305, FTS3325	82-89	•	•		**1915005700** **1915009530**	419	152.4x18.5/9.5x211 152.4x18.5/13.5x218			19150 19151	4x19150 + 4x19151	4xDF/20/3 + 4xDF/21/3	**8158057001**	**810635J**	80	6.35x15.88x11.9-150°(L10/10-10)	
FA3300, FA3305, FA3325, FAR3300, FAR3305, FAR3325, FAT3300, FAT3305, FAT3325, FT3300, FT3305, FT3325, FTG3325, FTS3325, FTT3300, FTT3305, FTT3325 **FTG3300, FTG3305, FTS3300, FTS3305** *(ATI)*	86-89		•	**1925609580** **1925609530**	**1925605700** **1925601230** **1925601230**	419	178x18.5/9.4x211 178x18.5/13.8x218			19256 19260	4x19256 + 4x19260	4xDF/16/1 + 4xDF/17/2	**8158057001**	**810635J**	112	6.35x15.88x11.9-150°(L10/10-10)	
FAG3300, FAR3300, FT3300	86-89		•		**1961705700** **1961703270**	419	203x18.5/9.4x211 203x18.5/15.8x175.6			19617 19911	4x19617 + 4x19911	4xDF/30/1 + 4xDF/31/1	**8158057001**	**810635J**	144	6.35x15.88x11.9-150°(L10/10-10)	
FTG3300, FTG3305, FTS3300, FTS3305 *(ATI)*	86-89	•	•		**1915005700** **1915009530**	419	152.4x18.5/9.5x211 152.4x18.5/13.5x218			19150 19151	4x19150 + 4x19151	4xDF/20/3 + 4xDF/21/3	**8158057001**	**810635J**	80	6.35x15.88x11.9-150°(L10/10-10)	
	86-89		•	**1989009530**	**1989005700** **1989001230**	420	200x19.0/11.8x179 200x19.0/16.2x176			19890 19891	4x19890 + 4x19891	4xDF/32/1 + 4xDF/33/1	**8158057001**	**810635J**	128	6.35x15.88x11.9-150°(L10/10-10)	
3600																		
FA3600, FA3605, FAD3600, FAD3605, FAG3600, FAG3605, FAR3600, FAR3605, FAT3600, FAT3605, FT3600, FT3605, FTG3600, FTG3605, FTS3600, FTS3605	82-89	•	•		**1915005700** **1915009530**	419	152.4x18.5/9.5x211 152.4x18.5/13.5x218			19150 19151	4x19150 + 4x19151	4xDF/20/3 + 4xDF/21/3	**8158057001**	**810635J**	80	6.35x15.88x11.9-150°(L10/10-10)	
FAG3600, FAR3600, FT3600	86-89		•		**1961705700** **1961703270**	419	203x18.5/9.4x211 203x18.5/15.8x175.6			19617 19911	4x19617 + 4x19911	4xDF/30/1 + 4xDF/31/1	**8158057001**	**810635J**	144	6.35x15.88x11.9-150°(L10/10-10)	
FTG3600, FTG3605, FTS3600, FTS3605 *(ATI)*	86-89	•	•		**1915005700** **1915009530**	419	152.4x18.5/9.5x211 152.4x18.5/13.5x218			19150 19151	4x19150 + 4x19151	4xDF/20/3 + 4xDF/21/3	**8158057001**	**810635J**	80	6.35x15.88x11.9-150°(L10/10-10)	
	86-89		•	**1925609580** **1925609530**	**1925605700** **1925601230** **1925601230**	419	178x18.5/9.4x211 178x18.5/13.8x218			19256 19260	4x19256 + 4x19260	4xDF/16/1 + 4xDF/17/2	**8158057001**	**810635J**	112	6.35x15.88x11.9-150°(L10/10-10)	
	86-89		•	**1989009530**	**1989005700** **1989001230**	420	200x19.0/11.8x179 200x19.0/16.2x176			19890 19891	4x19890 + 4x19891	4xDF/32/1 + 4xDF/33/1	**8158057001**	**810635J**	128	6.35x15.88x11.9-150°(L10/10-10)	

© JURID / All rights reserved 2005

© JURID / All rights reserved 2005

D

				STOCK	STOCK	⌀ mm					WVA	BFMC	JURID	SUPASET	#	
Daf...																
75																
FAD, FAG, FAR, FAS, FAT, FTT	89-	•			**1905205700** **1905209530**	420	175x21.2/12.9x179 175x21.3/17.8x176			19052 19055	4x19052 + 4x19055	4xDF/46/1 + 4xDF/47/1	**8158058001**	**810635J**	96	6.35x17.5x11.9-150°(L11/10-11)
FAG, FAR, FAS, FAT, FTT	87-89	•		**1988809530**	**1988805700** **1988801230**	420	175x19.0/11.8x179 175x19.0/16.2x176			19888 19889	4x19888 + 4x19889	4xDF/36/1 + 4xDF/37/1	**8158057001**	**810635J**	96	6.35x15.88x11.9-150°(L10/10-10)
FA, FAD, FAG, FAR, FAS, FAT, FTT	87-89		•	**1990009580**	**1990005700** **1990001230**	420	150x19.1/16.8x176 150x18.5/12.8x179			19900 19901	4x19900 + 4x19901	4xDF/34/1 + 4xDF/35/1	**8158057001**	**810635J**	64	6.35x15.88x11.9-150°(L10/10-10)
	89-		•	**1901009530**	**1901005700** **1901001230**	420	150x21.3/17.8x176 150x21.2/12.9x179			19010 19011	4x19010 + 4x19011	4xDF/45/1 + 4xDF/44/1	**8158058001**	**810635J**	64	6.35x17.5x11.9-150°(L11/10-11)
	89-		•	**1906309530**	**1906305700** **1906301230**	420	200x21.1/12.9x179 200x21.3/17.8x176			19063 19064	4x19063 + 4x19064	4xDF/48/1 + 4xDF/49/1	**8158058001**	**810635J**	128	6.35x17.5x11.9-150°(L11/10-11)
FA, FAG, FAR, FAS, FT, FTS	87-89		•	**1989009530**	**1989005700** **1989001230**	420	200x19.0/11.8x179 200x19.0/16.2x176			19890 19891	4x19890 + 4x19891	4xDF/32/1 + 4xDF/33/1	**8158057001**	**810635J**	128	6.35x15.88x11.9-150°(L10/10-10)
FAR, FAS, FA, FT*(N 142,N 152)* **FAK, FTS***(N 142)*	89-	•		**1901009530**	**1901005700** **1901001230**	420	150x21.3/17.8x176 150x21.2/12.9x179			19010 19011	4x19010 + 4x19011	4xDF/45/1 + 4xDF/44/1	**8158058001**	**810635J**	64	6.35x17.5x11.9-150°(L11/10-11)
FA, FT*(N 152)*	87-89	•		**1990009580**	**1990005700** **1990001230**	420	150x19.1/16.8x176 150x18.5/12.8x179			19900 19901	4x19900 + 4x19901	4xDF/34/1 + 4xDF/35/1	**8158057001**	**810635J**	64	6.35x15.88x11.9-150°(L10/10-10)
800																
FA	74-86	•			**1782705380** **1782709530**	325	120x12.5x251 120x12.5x209			17827 17828	2x17827 + 2x17828	2xSA/28/1 + 2xSA/29/1	**8102050009**	**810500J**	60	5x13x9.5-180°
	87-91	•			**2901709560**	315	191x23x87	**567122J**		29017	4x29017					
	74-86		•		**1962005380**	325	150x12.5x209.4 150x12.5x251.3			19620 19621	2x19620 + 2x19621	2xSA/30/1 + 2xSA/31/1	**8102050009**	**810500J**	64	5x13x9.5-180°
	87-91		•	**1581709580**	**1581703320**	325	96.5x12.0x312 96.5x12.0x258			15817 15823	2x15817 + 2x15823	2xMP/37/1 + 2xMP/38/1	**8103080007**	**810800J**	44	8x20x15.5-180°
85CF																
340, 380, 430	-01	•	•		**2910815390**		248x30x109			29108	4x29108					
85																
FAD, FAG, FAR, FAS, FAT, FTT	89-	•			**1905205700** **1905209530**	420	175x21.2/12.9x179 175x21.3/17.8x176			19052 19055	4x19052 + 4x19055	4xDF/46/1 + 4xDF/47/1	**8158058001**	**810635J**	96	6.35x17.5x11.9-150°(L11/10-11)
FAG, FAR, FAS, FAT, FTT	87-89	•		**1988809530**	**1988805700** **1988801230**	420	175x19.0/11.8x179 175x19.0/16.2x176			19888 19889	4x19888 + 4x19889	4xDF/36/1 + 4xDF/37/1	**8158057001**	**810635J**	96	6.35x15.88x11.9-150°(L10/10-10)
FA, FAD, FAG, FAR, FAS, FAT, FTT	87-89		•	**1990009580**	**1990005700** **1990001230**	420	150x19.1/16.8x176 150x18.5/12.8x179			19900 19901	4x19900 + 4x19901	4xDF/34/1 + 4xDF/35/1	**8158057001**	**810635J**	64	6.35x15.88x11.9-150°(L10/10-10)
	89-		•	**1901009530**	**1901005700** **1901001230**	420	150x21.3/17.8x176 150x21.2/12.9x179			19010 19011	4x19010 + 4x19011	4xDF/45/1 + 4xDF/44/1	**8158058001**	**810635J**	64	6.35x17.5x11.9-150°(L11/10-11)
	89-		•	**1906309530**	**1906305700** **1906301230**	420	200x21.1/12.9x179 200x21.3/17.8x176			19063 19064	4x19063 + 4x19064	4xDF/48/1 + 4xDF/49/1	**8158058001**	**810635J**	128	6.35x17.5x11.9-150°(L11/10-11)
FA, FAG, FAR, FAS, FT, FTS	87-89		•	**1989009530**	**1989005700** **1989001230**	420	200x19.0/11.8x179 200x19.0/16.2x176			19890 19891	4x19890 + 4x19891	4xDF/32/1 + 4xDF/33/1	**8158057001**	**810635J**	128	6.35x15.88x11.9-150°(L10/10-10)
FAR, FAS, FA, FT*(N 142,N 152)* **FAK, FTS***(N 142)*	89-	•		**1901009530**	**1901005700** **1901001230**	420	150x21.3/17.8x176 150x21.2/12.9x179			19010 19011	4x19010 + 4x19011	4xDF/45/1 + 4xDF/44/1	**8158058001**	**810635J**	64	6.35x17.5x11.9-150°(L11/10-11)
FA, FT*(N 152)*	87-89	•		**1990009580**	**1990005700** **1990001230**	420	150x19.1/16.8x176 150x18.5/12.8x179			19900 19901	4x19900 + 4x19901	4xDF/34/1 + 4xDF/35/1	**8158057001**	**810635J**	64	6.35x15.88x11.9-150°(L10/10-10)
900																
FA	74-86	•			**1782705380** **1782709530**	325	120x12.5x251 120x12.5x209			17827 17828	2x17827 + 2x17828	2xSA/28/1 + 2xSA/29/1	**8102050009**	**810500J**	60	5x13x9.5-180°
	74-86		•		**1962005380**	325	150x12.5x209.4 150x12.5x251.3			19620 19621	2x19620 + 2x19621	2xSA/30/1 + 2xSA/31/1	**8102050009**	**810500J**	64	5x13x9.5-180°

© JURID / All rights reserved 2005

© JURID / All rights reserved 2005

				STOCK	STOCK	⌀ mm				WVA	BFMC	JURID	SUPASET	#	

Daf...

95XF

380, 430, 480, 530	-01	•	•		**2910815390**		248x30x109			29108	4x29108				

95

95*(Ⓞ : Rockwell Low Deck)*	92-	•	•	**1949209580**		375	180x19.2/11.9x183			19492	8x19492	8xRW/24/1	**8158056001**	**810635J**	120	6.35x14.29x11.9-150°(L9/10-9)
F95.500	11/89-		•		**1906905700** **1906903270**	420	240x20.8/14.2x179 200x21.3/17.8x176			19069 19077	4x19069 + 4x19077	4xDF/50/1 + 4xDF/51/1	**8158058001**	**810635J**	128	6.35x17.5x11.9-150°(L11/10-11)
FAD, FAG, FAR, FAS, FAT, FTT	89-	•			**1905205700** **1905209530**	420	175x21.2/12.9x179 175x21.3/17.8x176			19052 19055	4x19052 + 4x19055	4xDF/46/1 + 4xDF/47/1	**8158058001**	**810635J**	96	6.35x17.5x11.9-150°(L11/10-11)
FAG, FAR, FAS, FAT, FTT	87-89	•		**1988809530**	**1988805700** **1988801230**	420	175x19.0/11.8x179 175x19.0/16.2x176			19888 19889	4x19888 + 4x19889	4xDF/36/1 + 4xDF/37/1	**8158057001**	**810635J**	96	6.35x15.88x11.9-150°(L10/10-10)
FAT, FTT*(95 6x4)*	87-89	•	•	**1988809530**	**1988805700** **1988801230**	420	175x19.0/11.8x179 175x19.0/16.2x176			19888 19889	4x19888 + 4x19889	4xDF/36/1 + 4xDF/37/1	**8158057001**	**810635J**	96	6.35x15.88x11.9-150°(L10/10-10)
	89-	•	•		**1905205700** **1905209530**	420	175x21.2/12.9x179 175x21.3/17.8x176			19052 19055	4x19052 + 4x19055	4xDF/46/1 + 4xDF/47/1	**8158058001**	**810635J**	96	6.35x17.5x11.9-150°(L11/10-11)
FA, FAD, FAG, FAR, FAS, FAT, FTT	87-89		•	**1990009580**	**1990005700** **1990001230**	420	150x19.1/16.8x176 150x18.5/12.8x179			19900 19901	4x19900 + 4x19901	4xDF/34/1 + 4xDF/35/1	**8158057001**	**810635J**	64	6.35x15.88x11.9-150°(L10/10-10)
	89-		•	**1901009530**	**1901005700** **1901001230**	420	150x21.3/17.8x176 150x21.2/12.9x179			19010 19011	4x19010 + 4x19011	4xDF/45/1 + 4xDF/44/1	**8158058001**	**810635J**	64	6.35x17.5x11.9-150°(L11/10-11)
	89-		•	**1906309530**	**1906305700** **1906301230**	420	200x21.1/12.9x179 200x21.3/17.8x176			19063 19064	4x19063 + 4x19064	4xDF/48/1 + 4xDF/49/1	**8158058001**	**810635J**	128	6.35x17.5x11.9-150°(L11/10-11)
FA, FAG, FAR, FAS, FT, FTS	87-89		•	**1989009530**	**1989005700** **1989001230**	420	200x19.0/11.8x179 200x19.0/16.2x176			19890 19891	4x19890 + 4x19891	4xDF/32/1 + 4xDF/33/1	**8158057001**	**810635J**	128	6.35x15.88x11.9-150°(L10/10-10)
FAR, FAS, FA, FT*(N 142,N 152)* **FAK, FTS***(N 142)*	89-	•		**1901009530**	**1901005700** **1901001230**	420	150x21.3/17.8x176 150x21.2/12.9x179			19010 19011	4x19010 + 4x19011	4xDF/45/1 + 4xDF/44/1	**8158058001**	**810635J**	64	6.35x17.5x11.9-150°(L11/10-11)
FA, FT*(N 152)*	87-89	•		**1990009580**	**1990005700** **1990001230**	420	150x19.1/16.8x176 150x18.5/12.8x179			19900 19901	4x19900 + 4x19901	4xDF/34/1 + 4xDF/35/1	**8158057001**	**810635J**	64	6.35x15.88x11.9-150°(L10/10-10)

LF45

12t,6.2t	-01	•	•		**2908809560**		175.6x26x85			29088	4x29088				

LF55

FA55.180, FA55.220, FA55.250, FT55.180, FT55.220, FT55.250 *(Ⓞ : Wabco(PAN19-2) 19.5")*	01-03	•	•		**2914209569**		204.6x30x99.6			29142	4x29142				
FA55.180, FA55.220, FA55.250, FT55.180, FT55.220, FT55.250 *(Ⓞ : Wabco(PAN19-1) 19.5")*	03-	•	•		**2915905399**		210.45x30x92.3			29159	4x29159				
18t	-01	•	•		**2910815390**		248x30x109			29108	4x29108				

Ⓞ : Knorr*(SB 7000)* **22.5"**	00-	•			**2910815390**		248x30x109			29108	4x29108				

DB

DB250*(Double decker)*		•			**1901005700**	420	150x21.3/17.8x176 150x21.2/12.9x179			19010 19011	4x19010 + 4x19011	4xDF/45/1 + 4xDF/44/1	**8158058001**	**810635J**	64	6.35x17.5x11.9-150°(L11/10-11)
			•		**1974505700** **1974503270**	394	203x18.2/11.8x160			19745	8x19745	8xCS/64/1	**8158056001**	**810635J**	96	6.35x14.29x11.9-150°(L9/10-9)

© JURID / All rights reserved 2005

© JURID / All rights reserved 2005

Daf...

MB

MB200	74-84	•		**1915005700** **1915009530**		419	152.4x18.5/9.5x211 152.4x18.5/13.5x218			19150 19151	4x19150 + 4x19151	4xDF/20/3 + 4xDF/21/3	**8158057001**	**810635J**	80	6.35x15.88x11.9-150°(L10/10-10)
	84-	•		**1902405700**		419	152.4x21.2/10.6x211 152.4x21.3/15.4x218			19024 19031	4x19024 + 4x19031	4xDF/42/1 + 4xDF/43/1	**8158058001**	**810635J**	80	6.35x17.5x11.9-150°(L11/10-11)
	74-84		•	**1925609580** **1925609530**	**1925605700**	419	178x18.5/9.4x211 178x18.5/13.8x218			19256 19260	4x19256 + 4x19260	4xDF/16/1 + 4xDF/17/2	**8158057001**	**810635J**	112	6.35x15.88x11.9-150°(L10/10-10)
	84-		•	**1925609580** **1925609530**	**1925605700**	419	178x18.5/9.4x211 178x18.5/13.8x218			19256 19260	4x19256 + 4x19260	4xDF/16/1 + 4xDF/17/2	**8158057001**	**810635J**	112	6.35x15.88x11.9-150°(L10/10-10)
MB201DKCL, MB230	87-89	•		**1915005700** **1915009530**		419	152.4x18.5/9.5x211 152.4x18.5/13.5x218			19150 19151	4x19150 + 4x19151	4xDF/20/3 + 4xDF/21/3	**8158057001**	**810635J**	80	6.35x15.88x11.9-150°(L10/10-10)
	87-89		•	**1961705700** **1961703270**		419	203x18.5/9.4x211 203x18.5/15.8x175.6			19617 19911	4x19617 + 4x19911	4xDF/30/1 + 4xDF/31/1	**8158057001**	**810635J**	144	6.35x15.88x11.9-150°(L10/10-10)
MB201	74-80	•		**1915005700** **1915009530**		419	152.4x18.5/9.5x211 152.4x18.5/13.5x218			19150 19151	4x19150 + 4x19151	4xDF/20/3 + 4xDF/21/3	**8158057001**	**810635J**	80	6.35x15.88x11.9-150°(L10/10-10)
	74-80		•	**1961705700** **1961703270**		419	203x18.5/9.4x211 203x18.5/15.8x175.6			19617 19911	4x19617 + 4x19911	4xDF/30/1 + 4xDF/31/1	**8158057001**	**810635J**	144	6.35x15.88x11.9-150°(L10/10-10)
MB230	11/89-	•	•	**1906905700** **1906903270**		420	240x20.8/14.2x179 200x21.3/17.8x176			19069 19077	4x19069 + 4x19077	4xDF/50/1 + 4xDF/51/1	**8158058001**	**810635J**	128	6.35x17.5x11.9-150°(L11/10-11)
	11/89-	•		**1902405700**		419	152.4x21.2/10.6x211 152.4x21.3/15.4x218			19024 19031	4x19024 + 4x19031	4xDF/42/1 + 4xDF/43/1	**8158058001**	**810635J**	80	6.35x17.5x11.9-150°(L11/10-11)
	11/89-	•		**2974705440** **2974709560**		460	139x32x121	**567115J**		29747	8x29747					
	11/89-	•		**2996905440**		460	139x34.5x121	**567115J**		29969	8x29969					
	84-89	•		**1915005700** **1915009530**		419	152.4x18.5/9.5x211 152.4x18.5/13.5x218			19150 19151	4x19150 + 4x19151	4xDF/20/3 + 4xDF/21/3	**8158057001**	**810635J**	80	6.35x15.88x11.9-150°(L10/10-10)
	84-89		•	**1925609580** **1925609530**	**1925605700**	419	178x18.5/9.4x211 178x18.5/13.8x218			19256 19260	4x19256 + 4x19260	4xDF/16/1 + 4xDF/17/2	**8158057001**	**810635J**	112	6.35x15.88x11.9-150°(L10/10-10)

SB

200	-02	•	•		**2909305390**	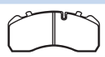	210.7x30x92.5			29093	4x29093					
LC160, LD120, SB220, SB3000	87-89		•	**1961705700** **1961703270**		419	203x18.5/9.4x211 203x18.5/15.8x175.6			19617 19911	4x19617 + 4x19911	4xDF/30/1 + 4xDF/31/1	**8158057001**	**810635J**	144	6.35x15.88x11.9-150°(L10/10-10)
LC160, LD120, SB220, SB3000, SBR3000	87-89	•		**1915005700** **1915009530**		419	152.4x18.5/9.5x211 152.4x18.5/13.5x218			19150 19151	4x19150 + 4x19151	4xDF/20/3 + 4xDF/21/3	**8158057001**	**810635J**	80	6.35x15.88x11.9-150°(L10/10-10)
SB2005	82-83	•		**1732405700**		406	127x19.3/15.0x209 127x19.2/10.8x203			17324 17325	4x17324 + 4x17325	4xDF/15/3 + 4xDF/14/3	**8158057001**	**810635J**	80	6.35x15.88x11.9-150°(L10/10-10)
	82-83		•	**1925609580** **1925609530**	**1925605700**	419	178x18.5/9.4x211 178x18.5/13.8x218			19256 19260	4x19256 + 4x19260	4xDF/16/1 + 4xDF/17/2	**8158057001**	**810635J**	112	6.35x15.88x11.9-150°(L10/10-10)
SB200	80-89	•		**1915005700** **1915009530**		419	152.4x18.5/9.5x211 152.4x18.5/13.5x218			19150 19151	4x19150 + 4x19151	4xDF/20/3 + 4xDF/21/3	**8158057001**	**810635J**	80	6.35x15.88x11.9-150°(L10/10-10)
	80-89		•	**1925609580** **1925609530**	**1925605700**	419	178x18.5/9.4x211 178x18.5/13.8x218			19256 19260	4x19256 + 4x19260	4xDF/16/1 + 4xDF/17/2	**8158057001**	**810635J**	112	6.35x15.88x11.9-150°(L10/10-10)
SB200, SD200	-89	•		**1726305700**		419	127x18.5/9.4x211 127x18.5/13.8x218			17263 17264	4x17263 + 4x17264	4xDF/22/2 + 4xDF/23/2	**8158057001**	**810635J**	80	6.35x15.88x11.9-150°(L10/10-10)
	-89		•	**1925609580** **1925609530**	**1925605700**	419	178x18.5/9.4x211 178x18.5/13.8x218			19256 19260	4x19256 + 4x19260	4xDF/16/1 + 4xDF/17/2	**8158057001**	**810635J**	112	6.35x15.88x11.9-150°(L10/10-10)

© JURID / All rights reserved 2005

© JURID / All rights reserved 2005

Daf...

SB...

SB201, SB210	74-89	•			**1915005700** **1915009530**		419	152.4x18.5/9.5x211 152.4x18.5/13.5x218			19150 19151	4x19150 + 4x19151	4xDF/20/3 + 4xDF/21/3	**8158057001**	**810635J**	80	6.35x15.88x11.9-150°(L10/10-10)
	74-89		•		**1961705700** **1961703270**		419	203x18.5/9.4x211 203x18.5/15.8x175.6			19617 19911	4x19617 + 4x19911	4xDF/30/1 + 4xDF/31/1	**8158057001**	**810635J**	144	6.35x15.88x11.9-150°(L10/10-10)
SB220LC	88-	•		**1990009580**	**1990005700**		420	150x19.1/16.8x176 150x18.5/12.8x179			19900 19901	4x19900 + 4x19901	4xDF/34/1 + 4xDF/35/1	**8158057001**	**810635J**	64	6.35x15.88x11.9-150°(L10/10-10)
	88-		•	**1989009530**	**1989005700**		420	200x19.0/11.8x179 200x19.0/16.2x176			19890 19891	4x19890 + 4x19891	4xDF/32/1 + 4xDF/33/1	**8158057001**	**810635J**	128	6.35x15.88x11.9-150°(L10/10-10)
SB220	11/89-	•	•		**1906905700** **1906903270**		420	240x20.8/14.2x179 200x21.3/17.8x176			19069 19077	4x19069 + 4x19077	4xDF/50/1 + 4xDF/51/1	**8158058001**	**810635J**	128	6.35x17.5x11.9-150°(L11/10-11)
SB220, SBG220	11/89-	•			**1901005700**		420	150x21.3/17.8x176 150x21.2/12.9x179			19010 19011	4x19010 + 4x19011	4xDF/45/1 + 4xDF/44/1	**8158058001**	**810635J**	64	6.35x17.5x11.9-150°(L11/10-11)
SB2300	82-89	•			**1915005700** **1915009530**		419	152.4x18.5/9.5x211 152.4x18.5/13.5x218			19150 19151	4x19150 + 4x19151	4xDF/20/3 + 4xDF/21/3	**8158057001**	**810635J**	80	6.35x15.88x11.9-150°(L10/10-10)
	82-89		•	**1925609580** **1925609530**	**1925605700**		419	178x18.5/9.4x211 178x18.5/13.8x218			19256 19260	4x19256 + 4x19260	4xDF/16/1 + 4xDF/17/2	**8158057001**	**810635J**	112	6.35x15.88x11.9-150°(L10/10-10)
SB2305, SB2705	11/84-	•			**1902405700**		419	152.4x21.2/10.6x211 152.4x21.3/15.4x218			19024 19031	4x19024 + 4x19031	4xDF/42/1 + 4xDF/43/1	**8158058001**	**810635J**	80	6.35x17.5x11.9-150°(L11/10-11)
	11/84-	•			**2974705440** **2974709560**		460	139x32x121	**567115J**		29747	8x29747					
	11/84-	•			**2996905440**		460	139x34.5x121	**567115J**		29969	8x29969					
	11/84-		•		**1961705700** **1961703270**		419	203x18.5/9.4x211 203x18.5/15.8x175.6			19617 19911	4x19617 + 4x19911	4xDF/30/1 + 4xDF/31/1	**8158057001**	**810635J**	144	6.35x15.88x11.9-150°(L10/10-10)
SB3000	89-	•	•		**1902405700**		419	152.4x21.2/10.6x211 152.4x21.3/15.4x218			19024 19031	4x19024 + 4x19031	4xDF/42/1 + 4xDF/43/1	**8158058001**	**810635J**	80	6.35x17.5x11.9-150°(L11/10-11)
	84-89	•			**1915005700** **1915009530**		419	152.4x18.5/9.5x211 152.4x18.5/13.5x218			19150 19151	4x19150 + 4x19151	4xDF/20/3 + 4xDF/21/3	**8158057001**	**810635J**	80	6.35x15.88x11.9-150°(L10/10-10)
	84-89	•			**2996905440**		460	139x34.5x121	**567115J**		29969	8x29969					
	87-89	•			**2974705440** **2974709560**		460	139x32x121	**567115J**		29747	8x29747					
	89-	•			**2974705440** **2974709560**		460	139x32x121	**567115J**		29747	8x29747					
	89-	•			**2996905440**		460	139x34.5x121	**567115J**		29969	8x29969					
	84-89		•	**1925609580** **1925609530**	**1925605700**		419	178x18.5/9.4x211 178x18.5/13.8x218			19256 19260	4x19256 + 4x19260	4xDF/16/1 + 4xDF/17/2	**8158057001**	**810635J**	112	6.35x15.88x11.9-150°(L10/10-10)
	84-89		•	**1989009530**	**1989005700**		420	200x19.0/11.8x179 200x19.0/16.2x176			19890 19891	4x19890 + 4x19891	4xDF/32/1 + 4xDF/33/1	**8158057001**	**810635J**	128	6.35x15.88x11.9-150°(L10/10-10)
	89-		•		**1906905700** **1906903270**		420	240x20.8/14.2x179 200x21.3/17.8x176			19069 19077	4x19069 + 4x19077	4xDF/50/1 + 4xDF/51/1	**8158058001**	**810635J**	128	6.35x17.5x11.9-150°(L11/10-11)
SBG220, SBR3000	11/89-		•		**1906905700** **1906903270**		420	240x20.8/14.2x179 200x21.3/17.8x176			19069 19077	4x19069 + 4x19077	4xDF/50/1 + 4xDF/51/1	**8158058001**	**810635J**	128	6.35x17.5x11.9-150°(L11/10-11)
SBR3000	11/89-	•	•		**1902405700**		419	152.4x21.2/10.6x211 152.4x21.3/15.4x218			19024 19031	4x19024 + 4x19031	4xDF/42/1 + 4xDF/43/1	**8158058001**	**810635J**	80	6.35x17.5x11.9-150°(L11/10-11)
	11/89-	•			**2974705440** **2974709560**		460	139x32x121	**567115J**		29747	8x29747					
	11/89-	•			**2996905440**		460	139x34.5x121	**567115J**		29969	8x29969					
	87-89		•		**1991405700** **1991409530**		419	240x18.6/12.9x179 240x19.2/16.9x176			19914 19915	4x19914 + 4x19915	4xDF/83/1 + 4xDF/84/1	**8158057001**	**810635J**	128	6.35x15.88x11.9-150°(L10/10-10)

© JURID / All rights reserved 2005

© JURID / All rights reserved 2005

				STOCK	STOCK	⌀ mm				WVA	BFMC	JURID	SUPASET #			
Daf...																
SB...																
17.5"	04/94-	•	•	**1906309530**	**1906305700**	420	200x21.1/12.9x179 200x21.3/17.8x176		19063 19064	4x19063 + 4x19064	4xDF/48/1 + 4xDF/49/1	**8158058001**	**810635J**	128	6.35x17.5x11.9-150°(L11/10-11)
	04/94-	•			**1905205700** **1905209530**	420	175x21.2/12.9x179 175x21.3/17.8x176		19052 19055	4x19052 + 4x19055	4xDF/46/1 + 4xDF/47/1	**8158058001**	**810635J**	96	6.35x17.5x11.9-150°(L11/10-11)
TB																
TB2100	11/89-	•	•		**1701205700**	419	127x21.3/15.4x218 127x21.3/10.6x211		17012 17013	2x17012 + 2x17013	2xDF/40/1 + 2xDF/41/1	**8158058001**	**810635J**	80	6.35x17.5x11.9-150°(L11/10-11)
	11/89-	•	•		**1902405700**	419	152.4x21.2/10.6x211 152.4x21.3/15.4x218		19024 19031	4x19024 + 4x19031	4xDF/42/1 + 4xDF/43/1	**8158058001**	**810635J**	80	6.35x17.5x11.9-150°(L11/10-11)
	84-89	•			**1915005700** **1915009530**	419	152.4x18.5/9.5x211 152.4x18.5/13.5x218		19150 19151	4x19150 + 4x19151	4xDF/20/3 + 4xDF/21/3	**8158057001**	**810635J**	80	6.35x15.88x11.9-150°(L10/10-10)
	11/89-		•	**1906309530**	**1906305700**	420	200x21.1/12.9x179 200x21.3/17.8x176		19063 19064	4x19063 + 4x19064	4xDF/48/1 + 4xDF/49/1	**8158058001**	**810635J**	128	6.35x17.5x11.9-150°(L11/10-11)
	84-89		•	**1925609580** **1925609530**	**1925605700**	419	178x18.5/9.4x211 178x18.5/13.8x218		19256 19260	4x19256 + 4x19260	4xDF/16/1 + 4xDF/17/2	**8158057001**	**810635J**	112	6.35x15.88x11.9-150°(L10/10-10)
De Filippi																
S36.3 *(20")*		•		**1903609550**	**1903604040** **1903601230**	419	178x19.0/16.0x189 178x18.2/11.5x194		19036 19037	4x19036 + 4x19037	4xRW/5/4 + 4xRW/6/4	**8103050014**	**810500J**	96	5x16x12-180°
Decauville																
Trailers																
⊢: **BPW** *(EHZ/S)*, ⊢: **BPW** *(Trilex)*		•		**1909409580**	**1909404040** **1909401250**	420	200x17.5/10.5x204		19094	8x19094	8xBC/97/1	**8162080001**	**810800J**	80	8x15x15.5-180°
Dennis																
Bulkmaster, Paxit	75-	•		**1754609580**		394	127x12.7x360		17546	4x17546	4xGG/118/1	**8158056001**	**810635J**	48	6.35x14.29x11.9-150°(L9/10-9)
	75-		•		**1911109530**	394	177.8x12.7x358.4		19111	4x19111	4xGG/92/1	**8158056001**	**810635J**	72	6.35x14.29x11.9-150°(L9/10-9)
Bulldog Refuse Collector **D Series, F Series, R Series, S Series** *(Fire Engine)*	76-	•			**1907203320** **1907209530**	394	152x12.7x362		19072	4x19072	4xGG/83/1	**8158056001**	**810635J**	48	6.35x14.29x11.9-150°(L9/10-9)
Delta1612, Delta1616, Delta1617, Delta1618	80-	•	•		**1911109530**	394	177.8x12.7x358.4		19111	4x19111	4xGG/92/1	**8158056001**	**810635J**	72	6.35x14.29x11.9-150°(L9/10-9)
Enviro Line (Ⓒ) *: Wabco(PAN19-1) 19.5")*	02-	•	•		**2915905399**				29159	4x29159					
F Series, R Series, S Series *(Fire Engine)*	76-		•		**1911109530**	394	177.8x12.7x358.4		19111	4x19111	4xGG/92/1	**8158056001**	**810635J**	72	6.35x14.29x11.9-150°(L9/10-9)

© JURID / All rights reserved 2005

© JURID / All rights reserved 2005

				→STOCK	STOCK→		∅ mm				WVA	BFMC	JURID	SUPASET	#		

Dennis...

...

Rapier *(Fire Engine)*	92-	•			**2901303371** **2901309561**			180x20.5x86			29013	4x29013					
	92-		•	**1950309580**	**1950303320**		360	170x16.0x315			19503	4x19503	4xCW/3/1	**8103080003**	**810800J**	72	8x15x15.5-180°
Sabre *(Fire Engine)*	95-	•			**2909009560**			249x28x114			29090	4x29090					
XM11, XM13, XM15, XM17		•	•	**1993809530**	**1993801820**		410	175x17.9/13.0x178			19938	8 x 19938	8xVL/87/1	**8158056001**	**810635J**	96	6.35x14.29x11.9-150°

DarT	89-08/92	•	•		**1991803320** **1991809530**		360	170x14.0x318			19918	4x19918	4xFI/124/1	**8103080003**	**810800J**	72	8x15x15.5-180°
	92-	•	•	**1950309580**	**1950303320**		360	170x16.0x315			19503	4x19503	4xCW/3/1	**8103080003**	**810800J**	72	8x15x15.5-180°
Dominator, Lancet	91-	•			**1974403270**		394	178x18.2/11.8x160			19744	8x19744	8xCS/63/1	**8158056001**	**810635J**	96	6.35x14.29x11.9-150°(L9/10-9)
	91-		•		**1974505700** **1974503270**		394	203x18.2/11.8x160			19745	8x19745	8xCS/64/1	**8158056001**	**810635J**	96	6.35x14.29x11.9-150°(L9/10-9)
Falcon H, Falcon V *(⊢⊣ : Kirkstall)*	83-		•		**1974505700** **1974503270**		394	203x18.2/11.8x160			19745	8x19745	8xCS/64/1	**8158056001**	**810635J**	96	6.35x14.29x11.9-150°(L9/10-9)
GX, Javelin MKII *(11 m,12 m)*	91-	•			**2904303381**		440	204x24x96	**567952J**		29043	4x29043					
Javelin MKIII	95-	•			**2909009560**			249x28x114			29090	4x29090					
LanceSLF	95-	•			**2903005390** **2903009560**		440	250x28x118		**587003J**	29030	4x29030					
Trident	01-	•	•		**2910815390**			248x30x109			29108	4x29108					

Dennison

Rigid *(4x2)*	77-82	•			**1974403270**		394	178x18.2/11.8x160			19744	8x19744	8xCS/63/1	**8158056001**	**810635J**	96	6.35x14.29x11.9-150°(L9/10-9)
Rigid *(◯ : Girling 4x2)*	77-82		•		**1937129530**		394	203x12.7x386			19371	4x19371	4xGG/142/1	**8158056001**	**810635J**	72	6.35x14.29x11.9-150°(L9/10-9)
6x4 Tipper,8x4 Tipper	77-82		•		**1911109530**		394	177.8x12.7x358.4			19111	4x19111	4xGG/92/1	**8158056001**	**810635J**	72	6.35x14.29x11.9-150°(L9/10-9)

Diana car

⊢⊣ : BPW			•	**1909409550**	**1909404040** **1909401250**		420	200x17.5/10.5x204			19094	8x19094	8xBC/97/1	**8162080001**	**810800J**	80	8x15x15.5-180°
⊢⊣ : ROR			•	**1903609552**	**1903604042** **1903601232**		419	178x18.6/16.7x188 178x18.2/11.5x194			19036 19037	4x19036 + 4x19037	4xIL/66/3 + 4xIL/67/3	**8158057001**	**810635J**	96	6.35x15.88x11.9-150°(L10/10-10)
			•		**1936504042** **1936509582** **1936509552**		419	203x18.2/11.5x194 203x18.6/15.7x188			19365 19366	4x19365 + 4x19366	4xRW/2/5 + 4xRW/1/5	**8158057001**	**810635J**	128	6.35x15.88x11.9-150°(L10/10-10)
			•		**1936904040**		419	219x18.5/10.5x196 219x18.6/15.2x190			19369 19370	4x19369 + 4x19370	4xFU/4/2 + 4xFU/5/2	**8158057001**	**810635J**	96	6.35x15.88x11.9-150°(L10/10-10)

JURID by Honeywell
© JURID / All rights reserved 2005
© JURID / All rights reserved 2005
JURID by Honeywell

				STOCK	STOCK	⌀ mm				WVA	BFMC	JURID	SUPASET	#		

Diebolt

⊢⊣ : Colaert Reinforced	•		1940503290	305	200x12.0x141		19405	8x19405		8103080003	810800J	80	8x15x15.5-180°

Dittman - Neuhauss

⊢⊣ : BPW *(Z6010T)*	•		1910304040	300	200x10.0x141		19103	8x19103	8xBC/55/1	8162080001	810800J	64	8x15x15.5-180°
⊢⊣ : BPW	•	1903209580	1903204040 1903201250	420	180x17.5/10.5x204		19032	8x19032	8xBC/98/1	8162080001	810800J	80	8x15x15.5-180°
	•	1909409580	1909404040 1909401250	420	200x17.5/10.5x204		19094	8x19094	8xBC/97/1	8162080001	810800J	80	8x15x15.5-180°
	•		1900545380	430	150x12.3x205		19005	8x19005	8xBC/41/1	8162080002	810800J	64	8x18x15.5-180°
	•		1910204040	300	150x10.3x142		19102	8x19102	8xBC/54/1	8162080001	810800J	64	8x15x15.5-180°
	•		1920004040	420	160x18.0/11.0x204		19200	8x19200	8xBC/35/1	8162080001	810800J	80	8x15x15.5-180°
	•		1951504040	300	200x16.0/8.2x129 200x16.0/12.7x132		19515 19516	4x19515 + 4x19516	4xSJ/23/1 + 4xSJ/22/1	8162080001	810800J	64	8x15x15.5-180°
⊢⊣ : SAF Sauer	•		1928304040	420	180x19.6/16.4x189 180x19.0/12.0x194		19283 19284	4x19283 + 4x19284	4xSJ/28/1 + 4xSJ/29/1	8103080005	810800J	64	8x18x15.5-180°
	•		1947703290	419	203x18.4/15.3x189 203x18.8/11.9x195		19477 19478	4x19477 + 4x19478	4xSJ/30/1 + 4xSJ/31/1	8103080005	810800J	64	8x18x15.5-180°
	•		1951704040	300	150x15.5/7.7x129 150x15.5/12.2x132		19517 19518	4x19517 + 4x19518	4xSJ/25/1 + 4xSJ/24/1	8162080001	810800J	64	8x15x15.5-180°

Dodge

50

S35	79-86	•		1794009530	330	101x7.9x304		17940	4x17940	4xLH/94/1			64	4x10x8-150°(G6)
S46, S56, S66	79-87	•		1578909530	330	76.2x9.0x302		15789	4x15789	4xGG/171/1	8158056001	810635J	48	6.35x14.29x11.9-150°(L9/10-9)
S75	79-88	•		1794009530	330	101x7.9x304		17940	4x17940	4xLH/94/1			64	4x10x8-150°(G6)

6235-8

	•	•	1980809580	406	200x15.5/13.8x166 200x15.4/9.6x166		19808 19809	4x19808 + 4x19809		8103080003	810800J	72	8x15x15.5-180°

8235-C20

	•	•	1980809580	406	200x15.5/13.8x166 200x15.4/9.6x166		19808 19809	4x19808 + 4x19809		8103080003	810800J	72	8x15x15.5-180°

Commando 1

G11, G18	74-81		•	1731609530	394	127x12.7x320		17316	4x17316	4xFD/121/1	8158055001	810635J	48	6.35x12.7x11.9-150°(L8/10-8)
G13, G20	74-81	•		1754609580	394	127x12.7x360		17546	4x17546	4xGG/118/1	8158056001	810635J	48	6.35x14.29x11.9-150°(L9/10-9)
G16, G26	74-81	•	•	1911109530	394	177.8x12.7x358.4		19111	4x19111	4xGG/92/1	8158056001	810635J	72	6.35x14.29x11.9-150°(L9/10-9)

Commando 200

K3620P, K3820P	74-81	•		1937129530	394	203x12.7x386		19371	4x19371	4xGG/142/1	8158056001	810635J	72	6.35x14.29x11.9-150°(L9/10-9)
	74-81		•	1755503320	330	101.6x9.5x317		17555	4x17555	4xGG/144/1	8103060003	810600J	48	6x12x11.5-180°
R3620P, R3820D		•	•	1980809580	406	200x15.5/13.8x166 200x15.4/9.6x166		19808 19809	4x19808 + 4x19809		8103080003	810800J	72	8x15x15.5-180°

JURID by Honeywell

© JURID / All rights reserved 2005

© JURID / All rights reserved 2005

JURID by Honeywell

				STOCK	STOCK	⌀ mm					WVA	BFMC	JURID	SUPASET	#	

Dodge...

Commando 2																
G11, G12, G18, G20	81-86		•	**1731609530**	394	127x12.7x320		17316	4x17316	4xFD/121/1	**8158055001**	**810635J**	48	6.35x12.7x11.9-150°(L8/10-8)
G12, G13*(V6)*, **G15***(V6)*	81-86	•		**1754609580**	394	127x12.7x360		17546	4x17546	4xGG/118/1	**8158056001**	**810635J**	48	6.35x14.29x11.9-150°(L9/10-9)
G13*(V8)*, **G15***(V8)*	81-86	•		**1907203320** **1907209530**	394	152x12.7x362		19072	4x19072	4xGG/83/1	**8158056001**	**810635J**	48	6.35x14.29x11.9-150°(L9/10-9)
G16, G26	81-86	•	•	**1911109530**	394	177.8x12.7x358.4		19111	4x19111	4xGG/92/1	**8158056001**	**810635J**	72	6.35x14.29x11.9-150°(L9/10-9)
G24	81-86	•		**1911109530**	394	177.8x12.7x358.4		19111	4x19111	4xGG/92/1	**8158056001**	**810635J**	72	6.35x14.29x11.9-150°(L9/10-9)
Commando 500																
K1613, K2213, K2413R, K2413T	74-86	•	•	**1911109530**	394	177.8x12.7x358.4		19111	4x19111	4xGG/92/1	**8158056001**	**810635J**	72	6.35x14.29x11.9-150°(L9/10-9)
K2011, K2211, K2413P	74-80	•		**1907203320** **1907209530**	394	152x12.7x362		19072	4x19072	4xGG/83/1	**8158056001**	**810635J**	48	6.35x14.29x11.9-150°(L9/10-9)
	74-80		•	**1911109530**	394	177.8x12.7x358.4		19111	4x19111	4xGG/92/1	**8158056001**	**810635J**	72	6.35x14.29x11.9-150°(L9/10-9)
KR13P	74-80	•		**1911109530**	394	177.8x12.7x358.4		19111	4x19111	4xGG/92/1	**8158056001**	**810635J**	72	6.35x14.29x11.9-150°(L9/10-9)
	74-80		•	**1937129530**	394	203x12.7x386		19371	4x19371	4xGG/142/1	**8158056001**	**810635J**	72	6.35x14.29x11.9-150°(L9/10-9)

Doll

⊢⊣ : BPW		•		**1903209550**	**1903204040** **1903201250**	420	180x17.5/10.5x204		19032	8x19032	8xBC/98/1	**8162080001**	**810800J**	80	8x15x15.5-180°
		•		**1909409550**	**1909404040** **1909401250**	420	200x17.5/10.5x204		19094	8x19094	8xBC/97/1	**8162080001**	**810800J**	80	8x15x15.5-180°
		•		**1909409580**	**1909404040** **1909401250**	420	200x17.5/10.5x204		19094	8x19094	8xBC/97/1	**8162080001**	**810800J**	80	8x15x15.5-180°
		•			**1959194040**	420	220x17.5/10.5x204		19591	8x19591	8xBC/81/1	**8162080001**	**810800J**	80	8x15x15.5-180°
		•			**1982509550**	420	220x17.9/12.4x219		19825	8x19825	8xBC/99/1	**8103080005**	**810800J**	80	8x18x15.5-180°

Dorsey

⊢⊣ : BPW		•		**1909409550**	**1909404040** **1909401250**	420	200x17.5/10.5x204		19094	8x19094	8xBC/97/1	**8162080001**	**810800J**	80	8x15x15.5-180°
⊢⊣ : ROR		•		**1903609552**	**1903604042** **1903601232**	419	178x18.6/16.7x188 178x18.2/11.5x194		19036 19037	4x19036 + 4x19037	4xIL/66/3 + 4xIL/67/3	**8158057001**	**810635J**	96	6.35x15.88x11.9-150°(L10/10-10)
		•			**1936904040**	419	219x18.5/10.5x196 219x18.6/15.2x190		19369 19370	4x19369 + 4x19370	4xFU/4/2 + 4xFU/5/2	**8158057001**	**810635J**	96	6.35x15.88x11.9-150°(L10/10-10)
⊢⊣ : SAE Dupillier		•			**1935903290**	414	150x19.0/9.1x202 151x19.0/14.8x200		19359 19360	4x19359 + 4x19360		**8102060009**		64	6x18x12-180°
		•			**1936703290**	414	211x17.7/9.6x202 211x18.6/15.2x220		19367 19368	4x19367 + 4x19368		**8102060009**		96	6x18x12-180°
⊢⊣ : York		•			**1946109550**	394	209x16.6/4.4x196 209x16.6/13.5x196		19461 19462	4x19461 + 4x19462	4xYK/9/3 + 4xYK/8/3	**8158044002**	**810476J**	128	4.76x15.88x9.32-150°(8-10)

© JURID / All rights reserved 2005

© JURID / All rights reserved 2005

Dyson Trailers

Newloader MK III (↤↦ : *ROR*)	72-	•	**1903609552**	**1903604042** **1903601232**	419	178x18.6/16.7x188 178x18.2/11.5x194		19036 19037	4x19036 + 4x19037	4xIL/66/3 + 4xIL/67/3	**8158057001**	**810635J**	96	6.35x15.88x11.9-150°(L10/10-10)

ERF

A

LAC304, LAG303, LAG304, MDG482, MKC404, MKC482, MKG364 *(28t,30t)* **LAC320, LAC340, LAG320, LAG340, LAR320, LAR349, MCC380, MCG340, MCR340, MKC340, MKC380, MKG320, MKG340, MKG380, MKR340, NGC380, NGC420** *(32t,37t)*	73-80	•		**1907203320** **1907209530**	394	152x12.7x362		19072	4x19072	4xGG/83/1	**8158056001**	**810635J**	48	6.35x14.29x11.9-150°(L9/10-9)
LAC304, LAG303, LAG304, MDG482, MKC404, MKC482, MKG364 *(28t,30t)*	73-80	•		**1937129530**	394	203x12.7x386		19371	4x19371	4xGG/142/1	**8158056001**	**810635J**	72	6.35x14.29x11.9-150°(L9/10-9)
LAG340, MKC340, NGC420 *(16t,32t,37t)*	73-80	•		**1911109530**	394	177.8x12.7x358.4		19111	4x19111	4xGG/92/1	**8158056001**	**810635J**	72	6.35x14.29x11.9-150°(L9/10-9)
	73-80	•		**1974403270**	394	178x18.2/11.8x160		19744	8x19744	8xCS/63/1	**8158056001**	**810635J**	96	6.35x14.29x11.9-150°(L9/10-9)
LBC480081, LBC480242, LBG242, MCC402, MDC482, MKC452260, MKC452402, MKG362, MKG482, MKR362 *(24t)*	73-80	•		**1961909530**	394	202.8x12.7x358.4		19619	4x19619		**8158056001**	**810635J**	64	6.35x14.29x11.9-150°(L9/10-9)
LAC320, LAC340, LAG320, LAR320, LAR349, MCC380, MCG340, MCR340, MKC380, MKG320, MKG340, MKG380, MKR340, NGC380 *(32t,37t)* **MGC340, MGC360, MGC420, MGK300** *(16t)*	73-80	•		**1974503270**	394	203x18.2/11.8x160		19745	8x19745	8xCS/64/1	**8158056001**	**810635J**	96	6.35x14.29x11.9-150°(L9/10-9)

B

31C4, 31R4, 32G4 *(8x2,8x4)* **31G2, 35G2, 40C2, 40R2** *(4x2,6x2,6x4)* **16G2, 34G2, 35R2, 38R2, 40G2** *(4x2)* **25G3, 38G2, 40C3, 40G3** *(6x2,6x4)*	74-83	•		**1911109530**	394	177.8x12.7x358.4		19111	4x19111	4xGG/92/1	**8158056001**	**810635J**	72	6.35x14.29x11.9-150°(L9/10-9)
40R2TR *(6x2,6x4)* **16G2, 31G2, 34G2, 35G2, 35R2, 38R2, 40C2, 40G2, 40R2** *(4x2)* **31C4, 31R4, 32G4** *(8x2,8x4)*	74-83	•		**1937129530**	394	203x12.7x386		19371	4x19371	4xGG/142/1	**8158056001**	**810635J**	72	6.35x14.29x11.9-150°(L9/10-9)
25G3 (↤↦ : *Rigid 6x2*,↤↦ : *Rigid 6x4*)	74-83	•	•	**1911109530**	394	177.8x12.7x358.4		19111	4x19111	4xGG/92/1	**8158056001**	**810635J**	72	6.35x14.29x11.9-150°(L9/10-9)

© JURID / All rights reserved 2005

© JURID / All rights reserved 2005

ERF...



...

B...																
38C2TR, 40C2TR	74-83	•		**1974403270**	394	178x18.2/11.8x160		19744	8x19744	8xCS/63/1	**8158056001**	**810635J**	96	6.35x14.29x11.9-150°(L9/10-9)
25G3, 31G2, 35G2, 38G2, 40C2, 40C3, 40G3, 40R2TR, 40R2 *(⊢⊣ : Kirkstall 6x2, ⊢⊣ : Kirkstall 6x4)*	74-83		•	**1974503270**	394	203x18.2/11.8x160		19745	8x19745	8xCS/64/1	**8158056001**	**810635J**	96	6.35x14.29x11.9-150°(L9/10-9)
34G3D2160		•		**1974403270**	394	178x18.2/11.8x160		19744	8x19744	8xCS/63/1	**8158056001**	**810635J**	96	6.35x14.29x11.9-150°(L9/10-9)
34G3 *(Draw Bar)*			•	**1974503270**	394	203x18.2/11.8x160		19745	8x19745	8xCS/64/1	**8158056001**	**810635J**	96	6.35x14.29x11.9-150°(L9/10-9)
CP																
CP28, CP32 *(Ⓞ : Girling 4x2)*	84-86	•	•	**1937129530**	394	203x12.7x386		19371	4x19371	4xGG/142/1	**8158056001**	**810635J**	72	6.35x14.29x11.9-150°(L9/10-9)
CP38 *(Ⓞ : Girling 4x2,Ⓞ : Girling 6x2, Ⓞ : Girling 6x4)*	84-86	•		**1911109530**	394	177.8x12.7x358.4		19111	4x19111	4xGG/92/1	**8158056001**	**810635J**	72	6.35x14.29x11.9-150°(L9/10-9)
CP38	84-86	•		**1974403270**	394	178x18.2/11.8x160		19744	8x19744	8xCS/63/1	**8158056001**	**810635J**	96	6.35x14.29x11.9-150°(L9/10-9)
(⊢⊣ : Kirkstall 4x2, ⊢⊣ : Kirkstall 6x2,⊢⊣ : Kirkstall 6x4)	84-86		•	**1974503270**	394	203x18.2/11.8x160		19745	8x19745	8xCS/64/1	**8158056001**	**810635J**	96	6.35x14.29x11.9-150°(L9/10-9)
C																
C36, C38	82-86	•	•	**1937129530**	394	203x12.7x386		19371	4x19371	4xGG/142/1	**8158056001**	**810635J**	72	6.35x14.29x11.9-150°(L9/10-9)
C36, C38 **C40** *(Ⓞ : Girling)*	82-86	•		**1911109530**	394	177.8x12.7x358.4		19111	4x19111	4xGG/92/1	**8158056001**	**810635J**	72	6.35x14.29x11.9-150°(L9/10-9)
C40 *(Ⓞ : Girling)*	82-86		•	**1937129530**	394	203x12.7x386		19371	4x19371	4xGG/142/1	**8158056001**	**810635J**	72	6.35x14.29x11.9-150°(L9/10-9)

E

E																
E10.25R, E10.29R *(⊢⊣ : Kirkstall)*	86-90	•		**1974403270**	394	178x18.2/11.8x160		19744	8x19744	8xCS/63/1	**8158056001**	**810635J**	96	6.35x14.29x11.9-150°(L9/10-9)
	86-90		•	**1974503270**	394	203x18.2/11.8x160		19745	8x19745	8xCS/64/1	**8158056001**	**810635J**	96	6.35x14.29x11.9-150°(L9/10-9)
E10.25R, E10.29R	86-90	•		**1911109530**	394	177.8x12.7x358.4		19111	4x19111	4xGG/92/1	**8158056001**	**810635J**	72	6.35x14.29x11.9-150°(L9/10-9)
	86-90		•	**1937129530**	394	203x12.7x386		19371	4x19371	4xGG/142/1	**8158056001**	**810635J**	72	6.35x14.29x11.9-150°(L9/10-9)
E16 *(⊢⊣ : Kirkstall 6x2, ⊢⊣ : Kirkstall 6x4)* **E10, E12, E14** *(⊢⊣ : Kirkstall 4x2, ⊢⊣ : Kirkstall 6x2, ⊢⊣ : Kirkstall 6x4)*	86-90	•	•	**1974503270**	394	203x18.2/11.8x160		19745	8x19745	8xCS/64/1	**8158056001**	**810635J**	96	6.35x14.29x11.9-150°(L9/10-9)
E10, E12, E14 *(4x2,6x2,6x4)* **E16** *(6x2,6x4)*	86-90	•	•	**1937129530**	394	203x12.7x386		19371	4x19371	4xGG/142/1	**8158056001**	**810635J**	72	6.35x14.29x11.9-150°(L9/10-9)
E6.18 *(⊢⊣ : Rigid 4x2 Tipper)*	86-90	•	•	**1911109530**	394	177.8x12.7x358.4		19111	4x19111	4xGG/92/1	**8158056001**	**810635J**	72	6.35x14.29x11.9-150°(L9/10-9)
E6.18	87-90	•	•	**1937129530**	394	203x12.7x386		19371	4x19371	4xGG/142/1	**8158056001**	**810635J**	72	6.35x14.29x11.9-150°(L9/10-9)
EC, ES	99-	•	•	**2903004230** **2903009560**		250x28x118		29030	4x29030					
EC, ES, Euro *(Ⓞ : Girling)*	09/93-	•	•	**1993901820** **1993909530**	**1907101230**	410	200x17.9/13.0x178		19071	8 x 19071	8xVL/88/1	**8158056001**	**810635J**	96	6.35x14.29x11.9-150°(L9/10-9)
EC, Euro *(Ⓞ : Rockwell)*	09/93-	•	•		**1955303270**	410	200x20.7/13.5x199 200x22.2/13.8x99 200x22.5/15.7x199	**587031J**	19553 19716 19717	4x19553 + 2x19716 + 2x19717	4xRW/29/1 + 2xRW/33/1 + 2xRW/32/1	**8103080005**	**810800J**	96	8x18x15.5-180°
ES6.19M16 *(Ⓞ : Girling)*	87-09/93	•	•	**1993901820** **1993909530**	**1907101230**	410	200x17.9/13.0x178		19071	8 x 19071	8xVL/88/1	**8158056001**	**810635J**	96	6.35x14.29x11.9-150°(L9/10-9)
	87-09/93	•	•	**1993809530**	**1993801820**	410	175x17.9/13.0x178		19938	8 x 19938	8xVL/87/1	**8158056001**	**810635J**	96	6.35x14.29x11.9-150°
ES6.19M16	87-09/93	•	•		**1937129530**	394	203x12.7x386		19371	4x19371	4xGG/142/1	**8158056001**	**810635J**	72	6.35x14.29x11.9-150°(L9/10-9)
E *(4x2,6x2,6x4,8x4)*	91-09/93	•	•	**1993901820** **1993909530**	**1907101230**	410	200x17.9/13.0x178		19071	8 x 19071	8xVL/88/1	**8158056001**	**810635J**	96	6.35x14.29x11.9-150°(L9/10-9)

© JURID / All rights reserved 2005

© JURID / All rights reserved 2005

				→STOCK	STOCK→	Ø mm			WVA		BFMC	JURID	SUPASET	#	

Ertec

⊢⊣ : BPW		•	1909409550	1909404040 1909401250	420	200x17.5/10.5x204		19094	8x19094	8xBC/97/1	8162080001	810800J	80	8x15x15.5-180°

Fauvet Girel

⊢⊣ : BPW		•	1909409550	1909404040 1909401250	420	200x17.5/10.5x204		19094	8x19094	8xBC/97/1	8162080001	810800J	80	8x15x15.5-180°
⊢⊣ : Coder		•		1933803290	420	200x17.5/11.5x204		19338	8x19338	8xFT/5/1	8103080007	810800J	64	8x20x15.5-180°

Filliat

⊢⊣ : BPW,⊢⊣ : SAF Sauer		•	1903209550	1903204040 1903201250	420	180x17.5/10.5x204		19032	8x19032	8xBC/98/1	8162080001	810800J	80	8x15x15.5-180°
		•	1909409550	1909404040 1909401250	420	200x17.5/10.5x204		19094	8x19094	8xBC/97/1	8162080001	810800J	80	8x15x15.5-180°

Foden

2000															
2200	88-	•	•	1955709580 1955709550	1955704040	419	203x19.4/10.9x195 203x19.5/15.6x189		19557 19606	4x19557 + 4x19606	4xFT/7/1 + 4xFT/6/1	8103050015	810500J	128	5x16x12-150°
	88-	•	•	1961309580 1961309550	1961304040 1961301230 1961301230	419	178x19.5/15.6x189 178x19.4/10.9x189		19613 19614	4x19613 + 4x19614	4xFT/12/1 + 4xFT/11/1	8103050015	810500J	128	5x16x12-150°
3000															
3049, 3053, 3063, 3250, 3300	88-	•	•	1955709580 1955709550	1955704040	419	203x19.4/10.9x195 203x19.5/15.6x189		19557 19606	4x19557 + 4x19606	4xFT/7/1 + 4xFT/6/1	8103050015	810500J	128	5x16x12-150°
	88-	•	•	1961309580 1961309550	1961304040 1961301230 1961301230	419	178x19.5/15.6x189 178x19.4/10.9x189		19613 19614	4x19613 + 4x19614	4xFT/12/1 + 4xFT/11/1	8103050015	810500J	128	5x16x12-150°
4000															
4250, 4300, 4350, 4400, 4500 *(◯) : Rockwell)*	82-	•	•	1955709580 1955709550	1955704040	419	203x19.4/10.9x195 203x19.5/15.6x189		19557 19606	4x19557 + 4x19606	4xFT/7/1 + 4xFT/6/1	8103050015	810500J	128	5x16x12-150°
	82-	•	•	1961309580 1961309550	1961304040 1961301230 1961301230	419	178x19.5/15.6x189 178x19.4/10.9x189		19613 19614	4x19613 + 4x19614	4xFT/12/1 + 4xFT/11/1	8103050015	810500J	128	5x16x12-150°
Fleetmaster															
⊢⊣ : ROR	77-80	•	•		1936504042 1936509582 1936509552	419	203x18.2/11.5x194 203x18.6/15.7x188		19365 19366	4x19365 + 4x19366	4xRW/2/5 + 4xRW/1/5	8158057001	810635J	128	6.35x15.88x11.9-150°(L10/10-10)

JURID by Honeywell
© JURID / All rights reserved 2005
© JURID / All rights reserved 2005
JURID by Honeywell

Foden...

Fleetmaster...

	79-83			1938509580	1938505380				587029J					

Haulmaster

⟷ : ROR	77-80	•	•		1936504042 1936509582 1936509552	419	203x18.2/11.5x194 203x18.6/15.7x188			19365 19366	4x19365 + 4x19366	4xRW/2/5 + 4xRW/1/5	**8158057001**	**810635J**	128	6.35x15.88x11.9-150°(L10/10-10)
	79-83			1938509580	1938505380				587029J					

S

S104, S106, S108(◯ : *Rockwell*)	82-87	•	•	1955709580 1955709550	1955704040	419	203x19.4/10.9x195 203x19.5/15.6x189			19557 19606	4x19557 + 4x19606	4xFT/7/1 + 4xFT/6/1	**8103050015**	**810500J**	128	5x16x12-150°
	82-87	•	•	1961309580 1961309550	1961304040 1961301230 1961301230	419	178x19.5/15.6x189 178x19.4/10.9x189			19613 19614	4x19613 + 4x19614	4xFT/12/1 + 4xFT/11/1	**8103050015**	**810500J**	128	5x16x12-150°
S104, S106, S108	82-87	•	•		1989603270 1989609530	420	178x18.5x197			19896	8x19896	8xAX/14/6	**8158056001**	**810635J**	112	6.35x14.29x11.9-150°(L9/10-9)
⟷ : Kirkstall 6x6 Military Vehicle	75-	•	•		1974503270	394	203x18.2/11.8x160			19745	8x19745	8xCS/64/1	**8158056001**	**810635J**	96	6.35x14.29x11.9-150°(L9/10-9)
◯ : Rockwell Low Mobility		•	•		1936504042 1936509582 1936509552	419	203x18.2/11.5x194 203x18.6/15.7x188			19365 19366	4x19365 + 4x19366	4xRW/2/5 + 4xRW/1/5	**8158057001**	**810635J**	128	6.35x15.88x11.9-150°(L10/10-10)

Ford

Tourneo

100, 120, 130, 150, 190, 230, 80 *(15")*	91-94		•		**361561J**		280	280x63						
	95-		•		**362302B**		280	280x63						
100, 120, 80(14")	91-	•			**571745J**		254	138.8x19x65	**561624J**		21470	4x21470		
100, 120, 80(15")	91-	•			**571745J**		270	138.8x19x65	**561625J**		21470	4x21470		
100, 120, 80(14")	91-94		•		**361560J**		254	254x50						
130, 150, 190, 230(15")	91-	•			**571746J**		270	138.8x19x72	**561625J**		21469	4x21469		

Transit

100L(Piston 4 x 41 mm)	86-91	•			**571250J**		270	105x17.8x75	**561121J**		20359	4x20359		
1309(Minibus Piston 4 x 46 mm) **100L, 160, 190**(Piston 4 x 46 mm)	86-91	•			**571822J**		270	126.7x18x72.6	**561121J**		20904	4x20904		
100L **1309**(◯ : 254x70 Minibus) **160, 190**(◯ : 254x70)	86-91		•		**361420J**		254	254x70						
100, 115, 80, 90	78-86		•		**361182J**		228	228x45						
100, FT130, FT175D **115**(Minibus)	73-78	•			**571379J**		270	105x18x75			20759	4x20759		

© JURID / All rights reserved 2005

© JURID / All rights reserved 2005

Ford...

Transit...

100, 120, 125, 130, 150, 160, 80, FT120D	78-86	•		**571233J**		270	88.5x15x70.5	**561121J**			20364 20365	2x20364 + 2x20365				
100, 120, 80	86-91	•		**571336J**		254	116.8x18x52.8	**561378J**			21141	4x21141				
	86-91		•	**361419J**		228	228x45									
FT100D, FT125D, FT75 **115***(Van)*	73-78	•		**571233J**		270	88.5x15x70.5				20364 20365	2x20364 + 2x20365				
125, 130, 150, 160	78-86		•	**361195J**		254	254x70									
125, 130, 150, 160, 175, 190, FT130, FT130D, FT150D, FT160, FT190, FT190D	78-86	•		**571379J**		270	105x18x75	**561282J**			20759	4x20759				
125, 130, 175	78-86		•	**361194J**		254	254x70									
1309*(Minibus Piston 4 x 41 mm)* **160, 190***(Piston 4 x 41 mm)*	86-91	•		**571379J**		270	105x18x75	**561121J**			20759	4x20759				
1309*(◯ : 254x70 Minibus)* **160, 190***(◯ : 254x70)*	86-91		•	**361421J**		254	254x70									
13015, 13017 *(Minibus Piston 2 x 57 mm)* **130***(Piston 2 x 57 mm)*	86-91	•		**571233J**		270	88.5x15x70.5	**561121J**			20364 20365	2x20364 + 2x20365				
2.0DI, 2.4DI*(Traction)*	00-	•		**573110**		294	168.7x18.4x67	**562140**								
2.0TD	00-	•				277		**562141**								
2.3i16V*(Traction)*	01-	•		**573110**		294	168.7x18.4x67	**562140**								
2.4DI*(Propulsion)*	00-	•		**573015**		294	168.8x18.4x60.6	**562140**			23430	4x23430				
14"	91-	•		**571745J**		254	138.8x19x65	**561624J**			21470	4x21470				
15"	91-	•		**571745J**		270	138.8x19x65	**561625J**			21470	4x21470				
	91-	•		**571746J**		270	138.8x19x72	**561625J**			21469	4x21469				
14"	91-94		•	**361560J**		254	254x50									
15"	91-94		•	**361561J**		280	280x63									
	95-		•	**362302B**		280	280x63									

Cargo

708, 709, 710, 711, 712, 713, 808, 809, 811, 812, 813 **1010, 1013, 907, 915***(17")*	03/81-92		•	**1793209530**		330	126x11.4/10.0x365 127x8.5/6.7x311				17932 17933	2x17932 + 2x17933	2xGG/187/1 + 2xGG/186/1	**8103040002**	**810400J**	56	4x8x7.5-180°
1111, 1112, 1113, 1114, 1115	03/81-92	•		**1754609580**		394	127x12.7x360				17546	4x17546	4xGG/118/1	**8158056001**	**810635J**	48	6.35x14.29x11.9-150°(L9/10-9)
1117C, 1117P*(V8)*	03/81-92	•		**1907203320** **1907209530**		394	152x12.7x362				19072	4x19072	4xGG/83/1	**8158056001**	**810635J**	48	6.35x14.29x11.9-150°(L9/10-9)
1211, 1213, 1215, 1218, 1311, 1315, 1317, 1317C, 1317P, 1318	03/81-92		•	**1731609530**		394	127x12.7x320				17316	4x17316	4xFD/121/1	**8158055001**	**810635J**	48	6.35x12.7x11.9-150°(L8/10-8)
1411, 1413, 1415, 1417, 1418	87-93	•		**1911109530**		394	177.8x12.7x358.4				19111	4x19111	4xGG/92/1	**8158056001**	**810635J**	72	6.35x14.29x11.9-150°(L9/10-9)
	87-93		•	**1731609530**		394	127x12.7x320				17316	4x17316	4xFD/121/1	**8158055001**	**810635J**	48	6.35x12.7x11.9-150°(L8/10-8)

© JURID / All rights reserved 2005

© JURID / All rights reserved 2005

Ford...

...

Cargo...

1512, 1513, 1514, 1515, 1517	03/81-91	•		**1911109530**		394	177.8x12.7x358.4			19111	4x19111	4xGG/92/1	**8158056001**	**810635J**	72	6.35x14.29x11.9-150°(L9/10-9)
	03/81-91		•	**1731609530**		394	127x12.7x320			17316	4x17316	4xFD/121/1	**8158055001**	**810635J**	48	6.35x12.7x11.9-150°(L8/10-8)
1520 **2417C, 2417P** *(◎ : Rockwell)*	81-86	•		**1988709530**		394	178x19.4/13.4x195			19887	8x19887	8xCW/11/1	**8158055001**	**810635J**	128	6.35x12.7x11.9-150°(L8/10-8)
1613, 1614, 1615, 1617, 1620, 1624 *(◎ : Rockwell)*	81-87	•		**1988709530**		394	178x19.4/13.4x195			19887	8x19887	8xCW/11/1	**8158055001**	**810635J**	128	6.35x12.7x11.9-150°(L8/10-8)
1613, 1614, 1615, 1617, 1620, 1624, 1715, 1718C, 1724C	81-87	•		**1911109530**		394	177.8x12.7x358.4			19111	4x19111	4xGG/92/1	**8158056001**	**810635J**	72	6.35x14.29x11.9-150°(L9/10-9)
1713, 1714, 1717, 1720, 1724, 1728	87-92	•		**2930209560**	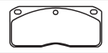	322	175.5x22x78	**567121J**		29302	4x29302					
	87-92		•	**1988709530**		394	178x19.4/13.4x195			19887	8x19887	8xCW/11/1	**8158055001**	**810635J**	128	6.35x12.7x11.9-150°(L8/10-8)
1715, 1718, 1721, 1724C, 1728C	88-92	•		**1988709530**		394	178x19.4/13.4x195			19887	8x19887	8xCW/11/1	**8158055001**	**810635J**	128	6.35x12.7x11.9-150°(L8/10-8)
1824, 1924	84-86	•	•	**1992103270**		394	203x19.5/13.5x211			19921	8x19921	8xCW/12/1	**8158055001**	**810635J**	128	6.35x12.7x11.9-150°(L8/10-8)
2014, 2015, 2114, 2115	81-92	•		**1907203320** **1907209530**		394	152x12.7x362			19072	4x19072	4xGG/83/1	**8158056001**	**810635J**	48	6.35x14.29x11.9-150°(L9/10-9)
2417C, 2417P	81-86	•		**1911109530**		394	177.8x12.7x358.4			19111	4x19111	4xGG/92/1	**8158056001**	**810635J**	72	6.35x14.29x11.9-150°(L9/10-9)
2417, 2424	87-	•		**1988709530**		394	178x19.4/13.4x195			19887	8x19887	8xCW/11/1	**8158055001**	**810635J**	128	6.35x12.7x11.9-150°(L8/10-8)
2420D, 2421D, 2424C	87-	•	•	**1988709530**		394	178x19.4/13.4x195			19887	8x19887	8xCW/11/1	**8158055001**	**810635J**	128	6.35x12.7x11.9-150°(L8/10-8)
2428C	89-	•		**1992103270**		394	203x19.5/13.5x211			19921	8x19921	8xCW/12/1	**8158055001**	**810635J**	128	6.35x12.7x11.9-150°(L8/10-8)
	89-		•	**1988709530**		394	178x19.4/13.4x195			19887	8x19887	8xCW/11/1	**8158055001**	**810635J**	128	6.35x12.7x11.9-150°(L8/10-8)
2517C, 2517P, 2521, 2817C, 2817P, 2820, 2824, 2921	82-92	•	•	**1988709530**		394	178x19.4/13.4x195			19887	8x19887	8xCW/11/1	**8158055001**	**810635J**	128	6.35x12.7x11.9-150°(L8/10-8)
	82-92	•	•	**1992103270**		394	203x19.5/13.5x211			19921	8x19921	8xCW/12/1	**8158055001**	**810635J**	128	6.35x12.7x11.9-150°(L8/10-8)
3220, 3224, 3424	84-	•	•	**1988709530**		394	178x19.4/13.4x195			19887	8x19887	8xCW/11/1	**8158055001**	**810635J**	128	6.35x12.7x11.9-150°(L8/10-8)
3220, 3224, 3424, 3824, 3828, 4028 **3828C** *(Twinsteer)*	84-	•	•	**1992103270**		394	203x19.5/13.5x211			19921	8x19921	8xCW/12/1	**8158055001**	**810635J**	128	6.35x12.7x11.9-150°(L8/10-8)
6011, 608, 708, 713, 808, 815	87-91	•	•	**2930209560**	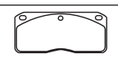	322	175.5x22x78	**567121J**		29302	4x29302					
608, 609, 611	03/81-92		•	**1578909530**		330	76.2x9.0x302			15789	4x15789	4xGG/171/1	**8158056001**	**810635J**	48	6.35x14.29x11.9-150°(L9/10-9)
708, 709, 710, 711, 712, 713	03/81-92	•		**1578909530**		330	76.2x9.0x302			15789	4x15789	4xGG/171/1	**8158056001**	**810635J**	48	6.35x14.29x11.9-150°(L9/10-9)
808, 809, 811, 812, 813	03/81-92	•		**1755503320**		330	101.6x9.5x317			17555	4x17555	4xGG/144/1	**8103060003**	**810600J**	48	6x12x11.5-180°

D

D0607, D0610, D0707, D0710	72-81	•		**1578909530**		330	76.2x9.0x302			15789	4x15789	4xGG/171/1	**8158056001**	**810635J**	48	6.35x14.29x11.9-150°(L9/10-9)
	72-81	•		**1755503320**		330	101.6x9.5x317			17555	4x17555	4xGG/144/1	**8103060003**	**810600J**	48	6x12x11.5-180°
D0807, D0810, D0907, D0910	72-77	•		**1755503320**		330	101.6x9.5x317			17555	4x17555	4xGG/144/1	**8103060003**	**810600J**	48	6x12x11.5-180°
D0807, D0810, D0907, D0910, D1011, D10110	78-81	•		**1755503320**		330	101.6x9.5x317			17555	4x17555	4xGG/144/1	**8103060003**	**810600J**	48	6x12x11.5-180°
	78-81		•	**1793209530**		330	126x11.4/10.0x365 127x8.5/6.7x311			17932 17933	2x17932 + 2x17933	2xGG/187/1 + 2xGG/186/1	**8103040002**	**810400J**	56	4x8x7.5-180°
D1210, D1211, D1311, D1314, DDT1711, DDT2014	72-80	•		**1754609580**		394	127x12.7x360			17546	4x17546	4xGG/118/1	**8158056001**	**810635J**	48	6.35x14.29x11.9-150°(L9/10-9)
D1614, D1617, D1618	72-80	•		**1907203320** **1907209530**		394	152x12.7x362			19072	4x19072	4xGG/83/1	**8158056001**	**810635J**	48	6.35x14.29x11.9-150°(L9/10-9)
	72-80		•	**1911109530**		394	177.8x12.7x358.4			19111	4x19111	4xGG/92/1	**8158056001**	**810635J**	72	6.35x14.29x11.9-150°(L9/10-9)
DT2414, DT2417, DT2418	72-80	•		**1911109530**		394	177.8x12.7x358.4			19111	4x19111	4xGG/92/1	**8158056001**	**810635J**	72	6.35x14.29x11.9-150°(L9/10-9)
	72-80		•	**1907203320** **1907209530**		394	152x12.7x362			19072	4x19072	4xGG/83/1	**8158056001**	**810635J**	48	6.35x14.29x11.9-150°(L9/10-9)

N

N0708, N0710, N0808, N0810, N0812, N0910, N0912	73-81	•		**1755503320**		330	101.6x9.5x317			17555	4x17555	4xGG/144/1	**8103060003**	**810600J**	48	6x12x11.5-180°

JURID by Honeywell

© JURID / All rights reserved 2005

© JURID / All rights reserved 2005

JURID by Honeywell

				STOCK	STOCK	mm			WVA	BFMC	JURID	SUPASET	#	

Ford...

R1010, R1011, R1014, R1111, R1114	72-77	•			1754609580	394	127x12.7x360		17546	4x17546	4xGG/118/1	8158056001	810635J	48	6.35x14.29x11.9-150°(L9/10-9)
R1114, R1115	77-82	•	•		1907203320 1907209530	394	152x12.7x362		19072	4x19072	4xGG/83/1	8158056001	810635J	48	6.35x14.29x11.9-150°(L9/10-9)

Franchin

⊢⊣ : BPW		•	1903209550	1903204040 1903201250	420	180x17.5/10.5x204		19032	8x19032	8xBC/98/1	8162080001	810800J	80	8x15x15.5-180°
⊢⊣ : ROR 15"		•	1960409550	1960403290 1960401230	311	190x15.3/10.8x126 190x16.1/13.1x158		19604 19605	4x19604 + 4x19605	4xRW/9/2 + 4xRW/13/2	8158057001	810635J	80	6.35x15.88x11.9-150°(L10/10-10)
		•	1520709580		420	90x8.2x405		15207	4x15207	4xFI/79/1	8103080003	810800J	64	8x15x15.5-180°
		•		1745609550	420	140x18.0/11.8x204		17456	8x17456		8103080008	810800J	80	8x22x15.5-180°
		•		1912505450	370	160x19.4x156		19125	8x19125	8xMB/61/1	8103080005	810800J	64	8x18x15.5-180°
		•		1936904040	419	219x18.5/10.5x196 219x18.6/15.2x190		19369 19370	4x19369 + 4x19370	4xFU/4/2 + 4xFU/5/2	8158057001	810635J	96	6.35x15.88x11.9-150°(L10/10-10)
15"		•		1976609550	320	220x17.2/13.1x172		19766	8x19766		8103080007	810800J	72	8x20x15.5-180°

Frejat

⊢⊣ : SAE Dupillier		•		1936703290	414	211x17.7/9.6x202 211x18.6/15.2x220		19367 19368	4x19367 + 4x19368		8102060009		96	6x18x12-180°

Frenelsa

⊢⊣ : BPW		•	1909409550	1909404040 1909401250	420	200x17.5/10.5x204		19094	8x19094	8xBC/97/1	8162080001	810800J	80	8x15x15.5-180°

Fromant Trailers

Container Carries

⊢⊣ : ROR	71-78	•	1903609552	1903604042 1903601232	419	178x18.6/16.7x188 178x18.2/11.5x194		19036 19037	4x19036 + 4x19037	4xIL/66/3 + 4xIL/67/3	8158057001	810635J	96	6.35x15.88x11.9-150°(L10/10-10)
	71-78	•		1936904040	419	219x18.5/10.5x196 219x18.6/15.2x190		19369 19370	4x19369 + 4x19370	4xFU/4/2 + 4xFU/5/2	8158057001	810635J	96	6.35x15.88x11.9-150°(L10/10-10)

Platform

⊢⊣ : ROR	71-78	•	1903609552	1903604042 1903601232	419	178x18.6/16.7x188 178x18.2/11.5x194		19036 19037	4x19036 + 4x19037	4xIL/66/3 + 4xIL/67/3	8158057001	810635J	96	6.35x15.88x11.9-150°(L10/10-10)
	71-78	•		1936904040	419	219x18.5/10.5x196 219x18.6/15.2x190		19369 19370	4x19369 + 4x19370	4xFU/4/2 + 4xFU/5/2	8158057001	810635J	96	6.35x15.88x11.9-150°(L10/10-10)

JURID by Honeywell
© JURID / All rights reserved 2005
© JURID / All rights reserved 2005
JURID by Honeywell

				STOCK	STOCK	⌀ mm				WVA	BFMC	JURID	SUPASET	#				

Fromant Trailers...

Pole

⊢⊣ : ROR	71-78	•	1903609552	1903604042 1903601232	419	178x18.6/16.7x188 178x18.2/11.5x194		19036 19037	4x19036 + 4x19037	4xIL/66/3 + 4xIL/67/3	8158057001	810635J	96	6.35x15.88x11.9-150°(L10/10-10)
	71-78	•		1936904040	419	219x18.5/10.5x196 219x18.6/15.2x190		19369 19370	4x19369 + 4x19370	4xFU/4/2 + 4xFU/5/2	8158057001	810635J	96	6.35x15.88x11.9-150°(L10/10-10)

Tipper

⊢⊣ : ROR	71-78	•	1903609552	1903604042 1903601232	419	178x18.6/16.7x188 178x18.2/11.5x194		19036 19037	4x19036 + 4x19037	4xIL/66/3 + 4xIL/67/3	8158057001	810635J	96	6.35x15.88x11.9-150°(L10/10-10)
	71-78	•		1936904040	419	219x18.5/10.5x196 219x18.6/15.2x190		19369 19370	4x19369 + 4x19370	4xFU/4/2 + 4xFU/5/2	8158057001	810635J	96	6.35x15.88x11.9-150°(L10/10-10)
⊢⊣ : ROR	71-78	•	1903609552	1903604042 1903601232	419	178x18.6/16.7x188 178x18.2/11.5x194		19036 19037	4x19036 + 4x19037	4xIL/66/3 + 4xIL/67/3	8158057001	810635J	96	6.35x15.88x11.9-150°(L10/10-10)

Fromco Trailers

24t	69-	•		1936904040	419	219x18.5/10.5x196 219x18.6/15.2x190		19369 19370	4x19369 + 4x19370	4xFU/4/2 + 4xFU/5/2	8158057001	810635J	96	6.35x15.88x11.9-150°(L10/10-10)
26t	74-	•	1960409550	1960403290 1960401230	311	190x15.3/10.8x126 190x16.1/13.1x158		19604 19605	4x19604 + 4x19605	4xRW/9/2 + 4xRW/13/2	8158057001	810635J	80	6.35x15.88x11.9-150°(L10/10-10)

Fruehauf

FOU5DF		•		1904904040	414	150x12.5x347 285x12.5x285		19049 19199	2x19049 + 2x19199	2xSA/10/1 + 2xSA/11/1	8102060005		96	6x13.5x12-180°
⊢⊣ : BPW *(D30)*		•	1909409580	1909404040 1909401250	420	200x17.5/10.5x204		19094	8x19094	8xBC/97/1	8162080001	810800J	80	8x15x15.5-180°
⊢⊣ : BPW		•	1903209580	1903204040 1903201250	420	180x17.5/10.5x204		19032	8x19032	8xBC/98/1	8162080001	810800J	80	8x15x15.5-180°
		•		1920004040	420	160x18.0/11.0x204		19200	8x19200	8xBC/35/1	8162080001	810800J	80	8x15x15.5-180°
⊢⊣ : Propar *(P13)*, ⊢⊣ : Propar *(PS)*, ⊢⊣ : Propar *(PSL)*		•	1903609580	1903604040 1903601230	419	178x19.0/16.0x189 178x18.2/11.5x194		19036 19037	4x19036 + 4x19037	4xRW/5/4 + 4xRW/6/4	8103050014	810500J	96	5x16x12-180°
⊢⊣ : Propar *(P15)*		•		1967203290	419	150x18.2/11.5x194 150x18.6/15.7x188		19672 19673	4x19672 + 4x19673	4xFT/8/1 + 4xFT/9/1	8103050014	810500J	96	5x16x12-180°
⊢⊣ : Propar *(P20)*,⊢⊣ : SMB *(C1)*		•	1955709580 1955709550	1955704040 1955701230 1955701230	419	203x19.4/10.9x195 203x19.5/15.6x189		19557 19606	4x19557 + 4x19606	4xFT/7/1 + 4xFT/6/1	8103050015	810500J	128	5x16x12-150°
⊢⊣ : Propar		•	1936509580 1936509550	1936504040 1936501230 1936501230	419	203x18.6/15.7x188 203x18.6/15.7x188		19365 19366	4x19365 + 4x19366	4xRW/2/1 + 4xRW/1/1	8103050014	810500J	96	5x16x12-180°
		•		1928304040	420	180x19.6/16.4x189 180x19.0/12.0x194		19283 19284	4x19283 + 4x19284	4xSJ/28/1 + 4xSJ/29/1	8103080005	810800J	64	8x18x15.5-180°
⊢⊣ : ROR		•	1903609552	1903604042 1903601232	419	178x18.6/16.7x188 178x18.2/11.5x194		19036 19037	4x19036 + 4x19037	4xIL/66/3 + 4xIL/67/3	8158057001	810635J	96	6.35x15.88x11.9-150°(L10/10-10)
		•	1938509580	1938505380	381	177.80x18x189.06	587029J	19384 19385	6x19384 + 2x19385	6xCW/4/1 + 2xCW/4/2				

© JURID / All rights reserved 2005

© JURID / All rights reserved 2005

													WVA		BFMC			
																JURID	SUPASET	#
			→ STOCK	STOCK →		⌀ mm												

Fruehauf...

...

⊢⊣ : ROR 15"		•	1960409550	1960403290 1960401230		311	190x15.3/10.8x126 190x16.1/13.1x158			19604 19605	4x19604 + 4x19605	4xRW/9/2 + 4xRW/13/2	8158057001	810635J	80	6.35x15.88x11.9-150°(L10/10-10)
⊢⊣ : ROR		•		1936504042 1936509582 1936509552		419	203x18.2/11.5x194 203x18.6/15.7x188			19365 19366	4x19365 + 4x19366	4xRW/2/5 + 4xRW/1/5	8158057001	810635J	128	6.35x15.88x11.9-150°(L10/10-10)
		•		1936904040		419	219x18.5/10.5x196 219x18.6/15.2x190			19369 19370	4x19369 + 4x19370	4xFU/4/2 + 4xFU/5/2	8158057001	810635J	96	6.35x15.88x11.9-150°(L10/10-10)
⊢⊣ : SAE Dupillier		•		1759203290		305	125x12.5x142.33			17592	8x17592		8103060007	810600J	48	6x15x11.5-180°
		•		1940103290		305	150x12.0x141			19401	8x19401	8xSJ/36/1	8103060007	810600J	64	6x15x11.5-180°
		•		1940503290		305	200x12.0x141			19405	8x19405		8103080003	810800J	80	8x15x15.5-180°
		•		310200120329		305	200x12.0x310									
⊢⊣ : SMB *(C2)*		•	1961309580 1961309550	1961304040 1961301230 1961301230		419	178x19.5/15.6x189 178x19.4/10.9x189			19613 19614	4x19613 + 4x19614	4xFT/12/1 + 4xFT/11/1	8103050015	810500J	128	5x16x12-150°
⊢⊣ : Trailor *(N9300)*		•		1996703290 1996709550		300	200x15.8/13.4x132 200x14.8/9.3x127			19967 19968	4x19967 + 4x19968	4xBC/106/1 + BC/107/1	8102050013	810500J	96	5x15x12-180°
⊢⊣ : Trailor *(RDS4221)*		•		1935903290		414	150x19.0/9.1x202 151x19.0/14.8x200			19359 19360	4x19359 + 4x19360		8102060009		64	6x18x12-180°
⊢⊣ : Trailor		•		1911709550		419	152.4x18.5/9.5x212 152.4x18.6/13.8x217			19117 19118	4x19117 + 4x19118	4xDF/20/1 + 4xDF/21/1	8102050010	810500J	64	5x13.5x11-180°(CT/BK)
(O) : Knorr *(SB 7000)* 22.5"	98-	•		2910815390		430	248x30x109	569100J		29108	4x29108					
(O) : Wabco *(PAN22)* 22.5"	98-	•				430		569100J								
Fruehauf Spain		•		1903609553		419	178x18.6/16.7x188 178x18.2/11.5x194			19036 19037	4x19036 + 4x19037	4xIL/66/3 + 4xIL/67/3	8158057001	810635J	96	6.35x15.88x11.9-150°(L10/10-10)
		•		1907203320 1907209530		394	152x12.7x362			19072	4x19072	4xGG/83/1	8158056001	810635J	48	6.35x14.29x11.9-150°(L9/10-9)
		•		1911109530		394	177.8x12.7x358.4			19111	4x19111	4xGG/92/1	8158056001	810635J	72	6.35x14.29x11.9-150°(L9/10-9)
Fruehauf Spain, ⊢⊣ : Propar *(P15A75)* 15", ⊢⊣ : SMB *(C3)* 15"		•		1986203290 1986209550		311	203x18.5/17.0x140 203x18.0x143			19862 19863	4x19862 + 4x19863	4xFU/17/1 + 4xFU/18/1	8103050014	810500J	96	5x16x12-180°

Goricka

⊢⊣ : BPW		•	1903209580	1903204040 1903201250		420	180x17.5/10.5x204			19032	8x19032	8xBC/98/1	8162080001	810800J	80	8x15x15.5-180°
		•	1990209580	1990204040 1990201250		360	200x18.6/13.9x159.3 200x18.6/11.5x189.5			19902 19903	4x19902 + 4x19903	4xBC/100/1 + 4xBC/101/1	8162080001	810800J	72	8x15x15.5-180°

Guy

J

BigJ6T, BigJ6 *(22t,26t,38t)* BigJ4T, BigJ4 *(16t,34t)* J8GVW, J8 *(24t,30t)*	70-	•	•		1911109530		394	177.8x12.7x358.4			19111	4x19111	4xGG/92/1	8158056001	810635J	72	6.35x14.29x11.9-150°(L9/10-9)
J8GVW, J8 *(24t,30t)*	70-	•			1907203320 1907209530		394	152x12.7x362			19072	4x19072	4xGG/83/1	8158056001	810635J	48	6.35x14.29x11.9-150°(L9/10-9)

JURID by Honeywell

© JURID / All rights reserved 2005

© JURID / All rights reserved 2005

JURID by Honeywell

G

				→STOCK	STOCK→	∅ mm				WVA	BFMC	JURID	SUPASET	#	

Guy...

Victoryll	73-84	•	•		1911109530	394	177.8x12.7x358.4		19111	4x19111	4xGG/92/1	8158056001	810635J	72	6.35x14.29x11.9-150°(L9/10-9)

Hahn / Fellbach

			•		1108401160	250	40x5.0x245		11084	4x11084	4xBC/51/1	8103040002	810400J	40	4x8x7.5-180°
			•		1126805870	230	39x4.1x234		11268	4x11268	4xVN/7/1	8103040002	810400J	40	4x8x7.5-180°
			•		1500405380	300	60x5.0x290		15004	4x15004	4xBC/52/1	8102040003	810400J	64	4x10x7.5-180°
			•		1524705380	400	80x8.0x389		15247	4x15247	4xFD/86/1	8162080001	810800J	40	8x15x15.5-180°

Haldex

(O) : Haldex(*DB22*) 22.5"			•	2912009560	2914305390		247.6x30x105		29120	4x29120					

Hands Trailers

USLM182, USSF200	70-		•		1936904040	419	219x18.5/10.5x196 219x18.6/15.2x190		19369 19370	4x19369 + 4x19370	4xFU/4/2 + 4xFU/5/2	8158057001	810635J	96	6.35x15.88x11.9-150°(L10/10-10)

Hanomag / Henschel (Henschel)

F163															
AK, AS	73-	•		1949409580 1949409530	1949405380 1949401230 1949401230	410	163x17.0/11.8x178		19494	8x19494	8xMP/31/2	8162080001	810800J	64	8x15x15.5-180°
	73-		•	1949509580 1949509530	1949505380 1949501230 1949501230	410	183x17.0/11.8x178		19495	8x19495	8xMP/32/2	8162080002	810800J	64	8x18x15.5-180°
K, L, LK, S, SF	71-74		•		1944905380	420	180x18.8/14.8x191 180x18.7/10.7x195		19449 19450	4x19449 + 4x19450	4xHJ/20/1 + 4xHJ/21/1	8103080007	810800J	64	8x20x15.5-180°
F193															
AK, AS	73-	•		1949409580 1949409530	1949405380 1949401230 1949401230	410	163x17.0/11.8x178		19494	8x19494	8xMP/31/2	8162080001	810800J	64	8x15x15.5-180°
	73-		•	1949509580 1949509530	1949505380 1949501230 1949501230	410	183x17.0/11.8x178		19495	8x19495	8xMP/32/2	8162080002	810800J	64	8x18x15.5-180°

JURID by Honeywell
© JURID / All rights reserved 2005
© JURID / All rights reserved 2005
JURID by Honeywell

				STOCK	STOCK	⌀ mm					WVA	BFMC	JURID	SUPASET	#			

Hanomag / Henschel (Henschel)...

...

F223

K, L, S	73-	•	**1949509580** **1949509530**	**1949505380** **1949501230** **1949501230**		410	183x17.0/11.8x178			19495	8x19495	8xMP/32/2	**8162080002**	**810800J**	64	8x18x15.5-180°

F263

AK*(6x6)*		• •	**1949409580** **1949409530**	**1949405380** **1949401230** **1949401230**		410	163x17.0/11.8x178			19494	8x19494	8xMP/31/2	**8162080001**	**810800J**	64	8x15x15.5-180°

Hendrickson

(O) : **Knorr***(SB 7000)* **22.5"**	98-	•		**2910815390**		430	248x30x109	**567751J**		29108	4x29108							
		•	**1903609552**	**1903604042** **1903601232**		419	178x18.6/16.7x188 178x18.2/11.5x194			19036 19037	4x19036 + 4x19037	4xIL/66/3 + 4xIL/67/3	**8158057001**	**810635J**	96	6.35x15.88x11.9-150°(L10/10-10)
		•		**1936904040**		419	219x18.5/10.5x196 219x18.6/15.2x190			19369 19370	4x19369 + 4x19370	4xFU/4/2 + 4xFU/5/2	**8158057001**	**810635J**	96	6.35x15.88x11.9-150°(L10/10-10)

Heuliez

GX107, GX113, GX187, GX44, GX57, GX87 *(Renault chassis)*		•		**1904903280**		414	150x12.5x347 285x12.5x285			19049 19199	2x19049 + 2x19199	2xSA/10/1 + 2xSA/11/1	**8102060005**		96	6x13.5x12-180°
		•	**1965709580**	**1965703280**		414	175x13.5x370			19657	4x19657	4xBT/59/6	**8103080005**	**810800J**	72	8x18x15.5-180°
GX117*(Renault chassis)*		•	**1993509580**	**1993503280**		414	175x18.5x184			19935	8x19935	8xRN/101/1	**8103080005**	**810800J**	64	8x18x15.5-180°
		•		**184200185328**												
GX417*(Volvo chassis)* **GX317***(Renault chassis)* **GX217** *(Renault chassis,Volvo chassis)*		•		**2909005392** **2909009560**			249x28x114		**587027J**	29090	4x29090					
GX217, GX417*(Volvo chassis)*		•	**1994001820** **1994009580**			410	225x17.9/13.0x178			19940	8x19940	8xVL/89/1	**8158056001**	**810635J**	96	6.35x14.29x11.9-150°(L9/10-9)
GX317*(Renault chassis)*		•		**2903005392** **2903009560**		438	250x28x118	**567953J**	**587026J**	29030	4x29030					
		•		**1918703280**		414	220x18.5x183.7			19187	8x19187	8xRN/104/1	**8103080005**	**810800J**	128	8x18x15.5-180°
GX44*(Mercedes chassis)*		•		**1970605380** **1957909580**		410	163x17.9/8.0x219 163x18.0/15.4x174 163x19x173.66			19579 19580 19706	4x19579 + 2x19580 + 2x19706	4xMB/75/1 + 2xMB/74/1 + 2xMB/74/2	**8162080002**	**810800J**	72	8x18x15.5-180°
		•		**1970705450** **1958109580**		410	223x17.9/7.9x219 223x18.0/15.4x174 223x19x173.66			19581 19582 19707	4x19581 + 2x19582 + 2x19707	4xMB/77/1 + 2xMB/76/1 + 2xMB/76/2	**8162080002**	**810800J**	72	8x18x15.5-180°
GX57*(Volvo chassis)*		•	**1956209530**	**1956205450**		394	203.4x18.5/11.1x192 203.4x18.5/14.3x147			19562 19563	4x19562 + 4x19563	4xVL/76/1 + 4xVL/77/1	**8131064002**		84	6.4x19x11.9-120°(BN)
GX57, GX77*(Volvo chassis)*		•		**1956009530**		413	152.6x18.5/11.1x200 152.6x18.5/14.2x160			19560 19561	4x19560 + 4x19561	4xVL/74/1 + 4xVL/75/1	**8131064002**		88	6.4x19x11.9-120°(BN)
GX77*(Volvo chassis)*		•	**1938509580**	**1938505380**		381	177.80x18x189.06		**587029J**	19384 19385	6x19384 + 2x19385	6xCW/4/1 + 2xCW/4/2				

JURID by Honeywell

© JURID / All rights reserved 2005

© JURID / All rights reserved 2005

JURID by Honeywell

				→STOCK	STOCK→	Ø mm			WVA	BFMC	JURID	SUPASET	#		

Heuliez...

...															
GX87 *(Volvo chassis)*		•		**1956209530**	**1956205450**	394	203.4x18.5/11.1x192 203.4x18.5/14.3x147		19562 19563	4x19562 + 4x19563	4xVL/76/1 + 4xVL/77/1	**8131064002**		84	6.4x19x11.9-120°(BN)
			•	**1979909580**	**1979901820**	394	254x19.0/14.7x147 254x19.0/11.5x198		19799 19800	4x19799 + 4x19800	4xVL/82/1 + 4xVL/81/1	**8158057002**	**810635J**	84	6.35x15.88x11.9-150°(L10/10-10)
			•		**1766401820** **1766409530**	413	127x19.1/11.6x200 127x19.1/14.8x160		17664 17665	4x17664 + 4x17665	4xVL/71/1 + 4xVL/70/1	**8131064002**		72	6.4x19x11.9-120°(BN)

Highway Trailers

⊢⊣ : ROR			•	**1903609552**	**1903604042** **1903601232**	419	178x18.6/16.7x188 178x18.2/11.5x194		19036 19037	4x19036 + 4x19037	4xIL/66/3 + 4xIL/67/3	**8158057001**	**810635J**	96	6.35x15.88x11.9-150°(L10/10-10)
			•		**1936904040**	419	219x18.5/10.5x196 219x18.6/15.2x190		19369 19370	4x19369 + 4x19370	4xFU/4/2 + 4xFU/5/2	**8158057001**	**810635J**	96	6.35x15.88x11.9-150°(L10/10-10)

Hoyner Trailers

24t,28t,30t,32t	68-79		•		**1936904040**	419	219x18.5/10.5x196 219x18.6/15.2x190		19369 19370	4x19369 + 4x19370	4xFU/4/2 + 4xFU/5/2	**8158057001**	**810635J**	96	6.35x15.88x11.9-150°(L10/10-10)

IFA

L60		•			**1712015380**	400	140x17.0x273 140x17.0x176.6		17120 17138	2x17120 + 2x17138				40	
W50		•	•		**1778305460**	400	119x11.0x381.4 119x11.0x281.9		17783 17784	2x17783 + 2x17784				64	

Ikarus

200, 260, 280	76-83	•	•		**1788835450**	420	140x21.5x183.4		1788830	8x1788830		**8162080002**	**810800J**	48	8x18x15.5-180°
	76-83		•		**1923505450**	420	180x19.5x183.4		19235	8x19235		**8162080002**	**810800J**	72	8x18x15.5-180°
260	87-	•			**1788835450**	420	140x21.5x183.4		1788830	8x1788830		**8162080002**	**810800J**	48	8x18x15.5-180°
280	84-	•	•		**1923605450**	420	180x20.0x196.7		19236	8x19236		**8158056001**	**810635J**	112	6.35x14.29x11.9-150°(L9/10-9)
	84-	•	•		**1989603270** **1989609530**	420	178x18.5x197		19896	8x19896	8xAX/14/6	**8158056001**	**810635J**	112	6.35x14.29x11.9-150°(L9/10-9)
CR160	77-	•			**1768205380** **1768209530**	410	123x17.0/11.8x178		17682	8x17682	8xMP/29/1	**8162080001**	**810800J**	64	8x15x15.5-180°
	77-		•		**1728505050**	440	140x10.0x191		17285	8x17285	8xBC/2/1	**8103080007**	**810800J**	64	8x20x15.5-180°

JURID by Honeywell
© JURID / All rights reserved 2005
© JURID / All rights reserved 2005
JURID by Honeywell

			STOCK	STOCK	⌀ mm				WVA	BFMC	JURID	SUPASET	#	

Ilasa

⊢⊣ : BPW		•	1903209550	1903204040 1903201250		420	180x17.5/10.5x204			19032	8x19032	8xBC/98/1	8162080001	810800J	80	8x15x15.5-180°
		•	1909409550	1909404040 1909401250		420	200x17.5/10.5x204			19094	8x19094	8xBC/97/1	8162080001	810800J	80	8x15x15.5-180°
⊢⊣ : Pegaso		•	1987909580	1987901230		410	200x16.6/9.6x162 200x16.6/16.3x162			19879 19881	4x19879 + 4x19881	4xPD/3/1 + 4xPD/4/1	8103060007	810600J	96	6x15x11.5-180°
⊢⊣ : ROR		•		1936904040		419	219x18.5/10.5x196 219x18.6/15.2x190			19369 19370	4x19369 + 4x19370	4xFU/4/2 + 4xFU/5/2	8158057001	810635J	96	6.35x15.88x11.9-150°(L10/10-10)

Iveco

Daily

28.8, 30.8, 30.9, 32.8 (○) : AP)	78-81	•		571250J		267	105x17.8x75	561127J		20359	4x20359					
	81-86	•		571379J		267	105x18x75	561127J		20759	4x20759					
28.8, 30.8, 30.9, 32.8	86-06/89		•	361049J		254	254x70									
28.8, 30.8, 30.9, 32.8, 35.1, 35.8, 35.9, 36.1, 40.1, 40.8 (○) : AP)	86-06/89	•		571442J		267	104.8x18.5x74.7	561127J		21160	4x21160					
28.8, 30.8, 30.9, 32.8, 35.1, 35.8, 35.9, 36.1, 40.1, 40.8 (○) : Brembo)	86-06/89	•		571447J		267	109.5x18.3x73	561127J		21188	4x21188					
35.1, 35.9, 40.1 (Turbo (○) : Brembo) **28.8, 30.8, 30.9, 32.8, 35.8, 40.8** (○) : Brembo)	78-86	•		571325J		267	109.5x18.3x73	561127J		21049	4x21049					
28F8, 30F8, 30U8, 32U8	78-86	•		571379J		267	105x18x75	561612J		20759	4x20759					
	78-86		•	361049J		254	254x70									
30.1, 30.8, 30.9, 32.8, 32.9	07/89-96		•	361049J		254	254x70									
30.1, 30.9, 32.8, 32.9, 35.1, 35.8, 35.9, 40.8 (○) : AP)	07/89-96	•		571442J		267	104.8x18.5x74.7	561127J		21160	4x21160					
30.1, 30.9, 32.8, 32.9, 35.1, 35.8, 35.9, 40.8 (○) : Brembo)	07/89-96	•		571447J		267	109.5x18.3x73	561127J		21188	4x21188					
30.1, 35.1, 40.1	96-	•		571416J		267	109.5x19x73	561612J		29038	4x29038					
30.8	07/89-96	•		571416J		267	109.5x19x73	561612J		29038	4x29038					
	96-99	•		573081J			109.5x18.3x73			29038	4x29038					
30.8 (○) : AP)	79-		•	415844B •		254	254x70									
	79-		•	415845B •		254	254x70									
30.8, 35.8, 40.8	07/89-96	•		571422J		267	109.5x18.3x73	561612B		21620	4x21620					
	96-	•		571422J		267	109.5x18.3x73	561612B		21620	4x21620					
35.1, 35.9, 40.1 (Turbo (○) : AP) **30.9, 35.8, 40.8** (○) : AP)	78-86	•		571379J		267	105x18x75	561127J		20759	4x20759					

© JURID / All rights reserved 2005

© JURID / All rights reserved 2005

Iveco...

Daily...

30.9, 35.8, 40.8 **35.1, 35.9, 40.1** *(Turbo)*	78-86		•		**361388J**		254	254x90										
35.12 *(Ⓞ : AP)*	79-		•		**415840B** •		254	254x90										
	79-		•		**415841B** •		254	254x90										
35.12	90-		•		**571419J**			149x18x69			29012	4x29012						
	96-		•	**2935709560**	**2912104531**			164.8x20x66.5			29121	4x29121						
35.12, 40.1, 45.1 *(Turbo)*	96-99	•		**2935709560**	**2912104531**		290	164.8x20x66.5	**567124J**		29121	4x29121						
	96-99		•		**1503005460**		270	79.5x8.0x210 79.5x8.0x243		**587006J**	15742 15030	2x15742 + 2x15030	2xMB/80/1 + 2xMB/81/3	**8102050003**	**810500J**	52	5x10x9.5-180°	
35.12, 40.1, 45.1, 49.12 *(Turbo)*	07/89-96	•			**571419J**		280	149x18x69	**561360J**		29012	4x29012						
	07/89-96		•		**1503005460**		270	79.5x8.0x210 79.5x8.0x243		**587006J**	15742 15030	2x15742 + 2x15030	2xMB/80/1 + 2xMB/81/3	**8102050003**	**810500J**	52	5x10x9.5-180°	
35.12, 45.1	86-	•			**571446J**		280	149x18x69	**561360J**		21006	4x21006						
35.12, 45.1, 49.12 *(Turbo)*	07/89-96		•		**415847B** •		270	270x80										
	07/89-96		•		**415846B** •		270	270x80										
35.1 *(Ⓞ : Brembo)*	96-		•		**573081J**			109.5x18.3x73			29038	4x29038						
35.1, 35.12, 35.8, 35.9	96-99		•	**2935709560**	**2912104531**		289	164.8x20x66.5	**567128J**		29121	4x29121						
35.1, 35.8, 35.9	96-99	•		**2935709560**	**2912104531**		290	164.8x20x66.5	**567118J**		29121	4x29121						
35.1, 35.8, 35.9, 36.1, 40.1, 40.8	86-06/89		•		**361388J**		254	254x90										
35.1, 35.8, 35.9, 40.1, 40.8 *(Ⓞ : AP)*	79-90		•		**415836B** •		254	254x90										
	79-90		•		**415837B** •		254	254x90										
35.1, 35.8, 35.9, 40.1, 40.8 *(Ⓞ : AP TU)*	79-90		•		**415838B** •		254	254x90										
	79-90		•		**415839B** •		254	254x90										
35.1, 35.8, 35.9, 40.8	07/89-96		•		**362314J**		254	254x90										
45.1, 49.1, 49.12, 50.12, 59.12 **40.10W** *(Turbo Diesel)*	89-		•		**571419J**			149x18x69										
40.1, 45.1	96-		•	**2935709560**	**2912104531**			164.8x20x66.5			29121	4x29121						
40.8 *(Turbo)*	86-		•		**571446J**		267	149x18x69	**561127J**		21006	4x21006						
45.1 **40.8** *(Turbo Diesel)*	87-		•		**571446J**			149x18x69			21006	4x21006						#REF!
45.1, 49.1 *(Turbo)*	85-06/89		•		**571446J**		280	149x18x69	**561360J**		21006	4x21006						
	85-06/89		•		**1503005460**		270	79.5x8.0x210 79.5x8.0x243		**587006J**	15742 15030	2x15742 + 2x15030	2xMB/80/1 + 2xMB/81/3	**8102050003**	**810500J**	52	5x10x9.5-180°	
50.12, 59.12 *(Turbo)*	90-		•		**2900109561**		290	174.4x20x69	**567124J**		29001	4x29001						
50.12, 59.12	92-		•		**2900109561**			174.4x20x69			29001	4x29001						
50.12, 59.12 *(Turbo)*	90-		•		**1709603270**		310	100x12.0x256 100x12.0x297			17096 17099	2x17096 + 2x17099	2xPB/23/1 + 2xPB/26/1	**8103060003**	**810600J**	52	6x12x11.5-180°	

JURID by Honeywell
© JURID / All rights reserved 2005

© JURID / All rights reserved 2005

											WVA	BFMC	JURID	SUPASET

Iveco...

Daily II

29C11V, 29C13V, 29C9V, 29L11V, 29L11, 29L9V, 29L9, 29S11V, 29S13V, 29S9V, 35C11, 35C13, 35C9, 35S11, 35S13, 35S9, 50C11, 50C13 *(◯ : Brembo)*	99-	•			**2912114530**		276	164.8x18x66.5	**569104J**		29121	4x29121		
29C11V, 29C13V, 29C9V, 29L11V, 29L11, 29L9V, 29L9, 29S11V, 29S13V, 29S9V, 35C11, 35C13, 35C9, 35S11, 35S13, 35S9, 50C11, 50C13 *(◯ : Brembo -ABS)*	99-		•	**2935709560**	**2912104531**		276	164.8x20x66.5	**569105J**		29121	4x29121		
29C11V, 29C13V, 29C9V, 29L11V, 29L11, 29L9V, 29L9, 29S11V, 29S13V, 29S9V, 35C11, 35C13, 35C9, 35S11, 35S13, 35S9, 50C11, 50C13 *(◯ : Brembo +ABS)*	99-		•	**2935709560**	**2912104531**		276	164.8x20x66.5	**569106J**		29121	4x29121		
29L10V, 29L10, 29L12V, 29L12, 35C15V, 35S15V *(◯ : Brembo)*	02-	•		**2935709560**	**2912104531**		290	164.8x20x66.5	**567118J**		29121	4x29121		
	02-	•			**2912114530**		276	164.8x18x66.5	**569104J**		29121	4x29121		
	02-		•	**2935709560**	**2912104531**		289	164.8x20x66.5	**567128J**		29121	4x29121		
29L10V, 29L10, 29L12V, 29L12, 35C15V, 35S15V *(◯ : Brembo -ABS)*	02-		•	**2935709560**	**2912104531**		276	164.8x20x66.5	**569105J**		29121	4x29121		
29L10V, 29L10, 29L12V, 29L12, 35C15V, 35S15V *(◯ : Brembo +ABS)*	02-		•	**2935709560**	**2912104531**		276	164.8x20x66.5	**569106J**		29121	4x29121		
29L11V, 29L11, 29L9V, 29L9, 35C11V, 35C11, 35C13V, 35C13, 35C9V, 35C9, 35S11V, 35S11, 35S13V, 35S13, 35S9V, 35S9, 50C11, 50C13 *(◯ : Brembo)*	99-	•		**2935709560**	**2912104531**		290	164.8x20x66.5	**567118J**		29121	4x29121		
	99-		•	**2935709560**	**2912104531**		289	164.8x20x66.5	**567128J**		29121	4x29121		
29L13, 35C15, 35S15, 50C15 *(◯ : Brembo)*	01-	•		**2935709560**	**2912104531**		290	164.8x20x66.5	**567118J**		29121	4x29121		
	01-	•			**2912114530**		276	164.8x18x66.5	**569104J**		29121	4x29121		
	01-		•	**2935709560**	**2912104531**		289	164.8x20x66.5	**567128J**		29121	4x29121		
29L13, 35C15, 35S15, 50C15 *(◯ : Brembo -ABS)*	01-		•	**2935709560**	**2912104531**		276	164.8x20x66.5	**569105J**		29121	4x29121		
29L13, 35C15, 35S15, 50C15 *(◯ : Brembo +ABS)*	01-		•	**2935709560**	**2912104531**		276	164.8x20x66.5	**569106J**		29121	4x29121		

Talento

	89-93	•			**571304J**			130x19.2x71			20787 20741	2x20787 + 2x20741		

Eurocargo

100E, 120E, 65E, 75E, 80E, 90E *(Tector)*	00-	•	•		**2937409560**			175x22x85.5			29122	4x29122		

JURID by Honeywell
© JURID / All rights reserved 2005

© JURID / All rights reserved 2005
JURID by Honeywell

Iveco...

...

Eurocargo...

100E, 180E, 80E, 85E	91-00	•	•		**2906709560**	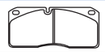	322	175.5x22x78	**567116J**	**587002J**	29067	4x29067					
110E, 120E *(Tector)*	00-	•	•		**2908809560**	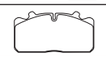		175.6x26x85			29088	4x29088					
110E, 120E, 130E, 140E, 210E, 250E, 260E, 280E, 320E	91-00	•	•	**1950309580**	**1950303320**		360	170x16.0x315			19503	4x19503	4xCW/3/1	**8103080003**	**810800J**	72	8x15x15.5-180°
	91-00	•			**2903204240** **2903209560**	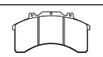	370	206x25x107	**567125J**	**587000J** **587001J**	29032	4x29032					
130E, 140E, 150E, 180E, 320E *(Tector)*	00-	•	•		**2909305390**	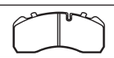		210.7x30x92.5			29093	4x29093					
135E	94-	•	•	**1950309580**	**1950303320**		360	170x16.0x315			19503	4x19503	4xCW/3/1	**8103080003**	**810800J**	72	8x15x15.5-180°
	94-	•			**2903204240** **2903209560**	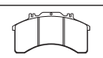	370	206x25x107	**567125J**		29032	4x29032					
150E	91-00	•			**2903204240** **2903209560**	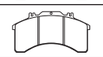	370	206x25x107	**567126J**	**587000J** **587001J**	29032	4x29032					
150E, 170E, 175E, 176E, 179E, 325E, 390E	91-00	•	•		**1938505380** **1938509530**		381	178x18.6/12.6x189 177.80x18x189.06		**587029J**	19384 19385	6x19384 + 2x19385	6xCW/4/1 + 2xCW/4/2	**8158057001**	**810635J**	96	6.35x15.88x11.9-150°(L10/10-10)
170E, 175E, 176E, 179E, 325E, 390E	91-00	•			**2901104240** **2901109560**	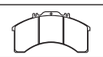	430	241x25x125	**567117J**	**587000J** **587001J**	29011	4x29011					
260E, 320E	93-	•			**2903204240** **2903209560**	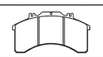	370	206x25x107	**567126J**	**587000J** **587001J**	29032	4x29032					
	93-		•		**1938505380** **1938509530**		381	178x18.6/12.6x189 177.80x18x189.06		**587029J**	19384 19385	6x19384 + 2x19385	6xCW/4/1 + 2xCW/4/2	**8158057001**	**810635J**	96	6.35x15.88x11.9-150°(L10/10-10)
325E	91-00	•			**2901104240** **2901109560**	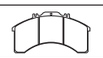		241x25x125			29011	4x29011					
60.12, 79.14	91-00	•			**2901709560**	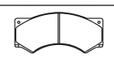		191x23x87			29017	4x29017					
60E, 65E	91-00	•			**2937409560**	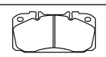	304	175x22x85.5	**567127J**	**587002J** **587025J**	29122	4x29122					
	91-00		•		**2906509560**	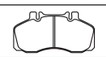	304	175x22x85.5	**567127J**	**587002J**	29065	4x29065					
75E	91-00	•	•		**2906509560**	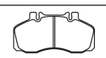	304	175x22x85.5	**567127J**	**587002J**	29065	4x29065					
	96-	•	•		**2937409560**	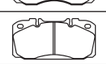	304	175x22x85.5	**567127J**	**587002J** **587025J**	29122	4x29122					
80E, 85E	91-00	•	•		**2906709560**			175.5x22x78		**587002J**	29067	4x29067					
95E	96-	•	•		**2906709560**	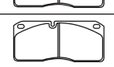	_322	175.5x22x78			29067	4x29067					

Eurostar

LD190 E **260E, 325E, 390E, 440E, 520E** *(↤ : Rockwell 6x4)* **240E** *(6x2)*	97-02	•			**2910815390**			248x30x109			29105	4x29105					
240E, 380E, 400E, 420E, 440E, 470E, 520E *(6x2,6x4)*	92-02	•			**2901104240** **2901109560**	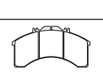	430	241x25x125	**567117J**	**587000J** **587001J**	29011	4x29011					
	92-02	•			**2910815390**	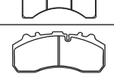	430	248x30x109	**567117J**		29105	4x29105					

© JURID / All rights reserved 2005

© JURID / All rights reserved 2005

				STOCK	STOCK	mm				WVA	BFMC	JURID	SUPASET	#			

Iveco...

...

Eurostar...

380E, 400E, 420E, 440E, 470E, 520E *(◯) : Perrot 6x2,* *(◯) : Perrot 6x2 Twinsteer)* **240E** *(◯) : Perrot 6x2)*	92-98	•		**1926305380** **1926309530**		410	200x21.4/15.9x202.7 200x21.4x202.71		**587030J**	19263 19343	6x19263 + 2x19343	6xPB/24/1 + 2xPB/24/2	**8103080005**	**810800J**	112	8x18x15.5-180°
240E *(⊢⊣ : Rockwell 6x2)* **380E, 400E, 420E, 440E, 470E, 520E** *(⊢⊣ : Rockwell 6x2,* *⊢⊣ : Rockwell 6x2 Twinsteer)* **LD190 E** *(⊢⊣ : Rockwell)*	92-94	•	**1955309530**	**1955301230**		410	200x21.1x196 200x21.1x196		**587031J**	19553 19554	6x19553 + 2x19554	6xRW/28/1 + 2xRW/28/2	**8103080005**	**810800J**	96	8x18x15.5-180°
240E, 380E, 400E, 420E, 440E, 470E, 520E *(⊢⊣ : Rockwell 6x2,* *⊢⊣ : Rockwell 6x4)* **LD260 E38, LD260 E42, LD260 E47, LD260 E52** *(⊢⊣ : Rockwell 6x4)*	92-94	•		**1955509530**		410	180x21.1x196 180x21.1x196		**587031J**	19555 19556	2x19555 + 6x19556	2xRW/29/1 + 6xRW/29/2	**8103080005**	**810800J**	96	8x18x15.5-180°
240E, 380E, 400E, 420E, 440E, 470E, 520E *(◯) : Perrot 6x2,(◯) : Perrot 6x4)* **LD260 E38, LD260 E42, LD260 E47, LD260 E52** *(◯) : Perrot 6x4)*	92-98	•		**1926205380** **1926209530**		410	180x21.4/15.9x202.7 180x21.4x202.71		**587030J**	19262 19342	6x19262 + 2x19342	6xPB/25/1 + 2xPB/25/2	**8103080005**	**810800J**	112	8x18x15.5-180°
325E, 390E *(◯) : Twinsteer 6x2)* **440E** *(⊢⊣ : Rockwell 6x4)*	93-02	•		**2901104240** **2901109560**			241x25x125		**587000J** **587001J**	29011	4x29011					
380E *(⊢⊣ : Rockwell 6x2)* **400E, 420E, 440E, 470E, 520E** *(⊢⊣ : Rockwell 6x2,* *⊢⊣ : Rockwell 6x2 Twinsteer)*	95-02	•		**1955303270**		410	200x20.7/13.5x199 200x22.2/13.8x99 200x22.5/15.7x199		**587031J**	19553 19716 19717	4x19553 + 2x19716 + 2x19717	4xRW/29/1 + 2xRW/33/1 + 2xRW/32/1	**8103080005**	**810800J**	96	8x18x15.5-180°
380E, 400E, 420E, 440E, 470E, 520E *(6x2 Twinsteer)*	97-02	• •		**2910815390**		430	248x30x109	**567117J**		29105	4x29105					
		• •		**2901104240** **2901109560**		430	241x25x125	**567117J**	**587000J** **587001J**	29011	4x29011					
380E, 400E, 420E, 440E, 470E, 520E *(⊢⊣ : Rockwell 6x2,* *⊢⊣ : Rockwell 6x4)* **LD260 E42, LD260 E47, LD260 E52** *(⊢⊣ : Rockwell 6x4)*	95-02	•		**1955603270**		410	180x20.7/13.5x199 180x22.2/13.8x199 180x22.5/15.7x199		**587031J**	19556 19714 19715	4x19556 + 2x19714 + 2x19715	4xRW/28/1 + 2xRW/31/1 + 2xRW/30/1	**8103080005**	**810800J**	96	8x18x15.5-180°
380E, 420E, 470E *(◯) : Twinsteer 6x2)* **520E** *(⊢⊣ : Rockwell 6x4,* *(◯) : Twinsteer 6x2)*	93-02	• •		**2901104240** **2901109560**			241x25x125		**587000J** **587001J**	29011	4x29011					
400E *(◯) : Twinsteer 6x2)*		•		**2901104240** **2901109560**			241x25x125		**587000J** **587001J**	29011	4x29011					
LD190 E39, LD190 E43, LD260 E39, LD260 E43	11/99-02	•		**2901104240** **2901109560**			241x25x125			29011	4x29011					
LD190 E39, LD260 E39	11/99-02	•		**2910815390**			248x30x109			29105	4x29105					
LD190 E43, LD260 E43	11/99-02			**2910815390**			248x30x109			29105	4x29105					

JURID by Honeywell
© JURID / All rights reserved 2005
© JURID / All rights reserved 2005
JURID by Honeywell

				→STOCK	STOCK→	∅ mm				WVA		BFMC	JURID	SUPASET	#	

Iveco...

Eurostar...

LD190 E(◯ : *Perrot*)	93-98		•		**1926305380** **1926309530**	410	200x21.4/15.9x202.7 200x21.4x202.71		**587030J**	19263 19343	6x19263 + 2x19343	6xPB/24/1 + 2xPB/24/2	**8103080005**	**810800J**	112	8x18x15.5-180°
	99-02		•		**1909103270**	410	202x21.8/x204.3 202x21.8/ x204.3		**587030J**	19091 19098	4x19091 + 4x19098		**8103080005**	**810800J**	112	8x18x15.5-180°
LD190 E **LD260 E38, LD260 E42, LD260 E47, LD260 E52** *(6x4)*	93-02	•	•		**2901104240** **2901109560**	430	241x25x125	**567117J**	**587000J** **587001J**	29011	4x29011					
	93-02	•	•		**2910815390**	430	248x30x109	**567117J**		29105	4x29105					
LD260 E38, LD260 E42, LD260 E47, LD260 E52 (◯ : *Perrot 6x4)*	92-98		•		**1909903270** **1926209530**	410	180x21.4/15.9x202.7 180x21.4x202.71		**587030J**	19262 19342	6x19262 + 2x19342	6xPB/25/1 + 2xPB/25/2	**8103080005**	**810800J**	112	8x18x15.5-180°
LD440 E39, LD440 E43	11/99-02	•	•		**2901104240** **2901109560**	430	241x25x125	**567117J**		29011	4x29011					
	11/99-02	•	•		**2910815390**	436	248x30x109	**567135J**		29105	4x29105					

Eurotech

Cursor	98-		•		**2910815390**	436	248x30x109	**567135J**		29105	4x29105					
MP400, MP440 (⊢⊣ : *Rockwell 4x2,* ⊢⊣ : *Rockwell 6x2,* ⊢⊣ : *Rockwell 6x2/4)* **MP180 E34, MP180 E38, MP180 E42, MP180 E52, MP190 E34, MP190 E38, MP190 E42** (⊢⊣ : *Rockwell)* **MP E38, MP E42, MP E52** (⊢⊣ : *Rockwell 4x2,* ⊢⊣ : *Rockwell 6x2,* ⊢⊣ : *Rockwell 6x2/4,* ⊢⊣ : *Rockwell 6x4)* **MP E34, MP240, MP260** (⊢⊣ : *Rockwell 6x2,* ⊢⊣ : *Rockwell 6x4)* **MP400 E38, MP400 E42, MP440 E34, MP440 E38** (⊢⊣ : *Rockwell 6x2 Twinsteer,* ⊢⊣ : *Rockwell 6x4 Twinsteer)*	92-94		•	**1955309530**	**1955301230**	410	200x21.1x196 200x21.1x196		**587031J**	19553 19554	6x19553 + 2x19554	6xRW/28/1 + 2xRW/28/2	**8103080005**	**810800J**	96	8x18x15.5-180°

JURID by Honeywell
© JURID / All rights reserved 2005
© JURID / All rights reserved 2005
JURID by Honeywell

			STOCK STOCK	mm			WVA	BFMC	JURID	SUPASET	#	

Iveco...





...

Eurotech...

MP440 *(⊢⊣ : Rockwell 4x2,* *⊢⊣ : Rockwell 6x2,* *⊢⊣ : Rockwell 6x2/4)* **MP180 E38, MP180 E42, MP180 E52, MP190 E34, MP190 E38, MP190 E42** *(⊢⊣ : Rockwell)* **MP E38, MP E42, MP E52** *(⊢⊣ : Rockwell 4x2,* *⊢⊣ : Rockwell 6x2,* *⊢⊣ : Rockwell 6x2/4,* *⊢⊣ : Rockwell 6x4)* **MP E34, MP260** *(⊢⊣ : Rockwell 6x2,* *⊢⊣ : Rockwell 6x4)* **MP400 E42, MP440 E34, MP440 E38** *(⊢⊣ : Rockwell 6x2 Twinsteer,* *⊢⊣ : Rockwell 6x4 Twinsteer)*	95-	•	**1955303270**	410	200x20.7/13.5x199 200x22.2/13.8x99 200x22.5/15.7x199	**587031J**	19553 19716 19717	4x19553 + 2x19716 + 2x19717	4xRW/29/1 + 2xRW/33/1 + 2xRW/32/1	**8103080005**	**810800J**	96	8x18x15.5-180°
MP E38, MP E42, MP E52 *(◯ : Perrot 4x2,◯ : Perrot 6x2,* *◯ : Perrot 6x2/4,◯ : Perrot 6x4)* **MP E34, MP240, MP260** *(◯ : Perrot 6x2,◯ : Perrot 6x4)* **MP400, MP440** *(◯ : Perrot 4x2,◯ : Perrot 6x2,* *◯ : Perrot 6x2/4)* **MP400 E38, MP400 E42, MP440 E34, MP440 E38** *(◯ : Perrot 6x2 Twinsteer,* *◯ : Perrot 6x4 Twinsteer)*	92-	•	**1926305380** **1926309530**	410	200x21.4/15.9x202.7 200x21.4x202.71	**587030J**	19263 19343	6x19263 + 2x19343	6xPB/24/1 + 2xPB/24/2	**8103080005**	**810800J**	112	8x18x15.5-180°
MP400, MP440 *(⊢⊣ : Rockwell 4x2,* *⊢⊣ : Rockwell 6x2,* *⊢⊣ : Rockwell 6x2/4)* **MP E38, MP E42, MP E52** *(⊢⊣ : Rockwell 4x2,* *⊢⊣ : Rockwell 6x2,* *⊢⊣ : Rockwell 6x2/4,* *⊢⊣ : Rockwell 6x4)* **MP E34, MP240, MP260** *(⊢⊣ : Rockwell 6x2,* *⊢⊣ : Rockwell 6x4)*	92-94	•	**1955509530**	410	180x21.1x196 180x21.1x196	**587031J**	19555 19556	2x19555 + 6x19556	2xRW/29/1 + 6xRW/29/2	**8103080005**	**810800J**	96	8x18x15.5-180°
MP E38, MP E42, MP E52 *(◯ : Perrot 4x2,◯ : Perrot 6x2,* *◯ : Perrot 6x2/4,◯ : Perrot 6x4)* **MP E34, MP240, MP260** *(◯ : Perrot 6x2,◯ : Perrot 6x4)* **MP400, MP440** *(◯ : Perrot 4x2,◯ : Perrot 6x2,* *◯ : Perrot 6x2/4)*	92-	•	**1926205380** **1926209530**	410	180x21.4/15.9x202.7 180x21.4x202.71	**587030J**	19262 19342	6x19262 + 2x19342	6xPB/25/1 + 2xPB/25/2	**8103080005**	**810800J**	112	8x18x15.5-180°

JURID by Honeywell
© JURID / All rights reserved 2005
© JURID / All rights reserved 2005
JURID by Honeywell

→STOCK STOCK→ mm WVA BFMC JURID SUPASET #

Iveco...

Eurotech...

MP440 *(⊢⊣ : Rockwell 4x2,* *⊢⊣ : Rockwell 6x2,* *⊢⊣ : Rockwell 6x2/4)* **MP E38, MP E42, MP E52** *(⊢⊣ : Rockwell 4x2,* *⊢⊣ : Rockwell 6x2,* *⊢⊣ : Rockwell 6x2/4,* *⊢⊣ : Rockwell 6x4)* **MP E34, MP260** *(⊢⊣ : Rockwell 6x2,* *⊢⊣ : Rockwell 6x4)*	95-	•		**1955603270**		410	180x20.7/13.5x199 180x22.2/13.8x199 180x22.5/15.7x199		**587031J**	19556 19714 19715	4x19556 + 2x19714 + 2x19715	4xRW/28/1 + 2xRW/31/1 + 2xRW/30/1	**8103080005**	**810800J**	96	8x18x15.5-180°
MP180 E52 **MP E52***(6x2,6x4)*	92-	•		**2901104240** **2901109560**		430	241x25x125	**567117J**	**587000J** **587001J**	29011	4x29011					
MP180 E34, MP180 E38, **MP180 E42**	92-93	•		**2901104240** **2901109560**		430	241x25x125	**567117J**	**587000J** **587001J**	29011	4x29011					
MP180 E34, MP180 E38, **MP180 E42, MP180 E52,** **MP190 E34, MP190 E38,** **MP190 E42** *(◯ : Perrot)*	92-98	•		**1926305380** **1926309530**		410	200x21.4/15.9x202.7 200x21.4x202.71		**587030J**	19263 19343	6x19263 + 2x19343	6xPB/24/1 + 2xPB/24/2	**8103080005**	**810800J**	112	8x18x15.5-180°
MP190 E34, MP190 E38, **MP190 E42** **MP440 E38, MP440 E42***(6x2)* **MP240 E38, MP240 E42,** **MP260 E38, MP260 E42** *(6x2,6x4)* **MP400 E34, MP400 E42***(4x2)*	97-	•		**2910815390**		436	248x30x109	**567135J**		29105	4x29105					
MP190 E34, MP190 E38, **MP190 E42** **MP400 E38***(6x2)*	93-96	•		**2901104240** **2901109560**		430	241x25x125	**567117J**	**587000J** **587001J**	29011	4x29011					
MP240 E34*(6x2,6x4)*	95-97	•		**2901104240** **2901109560**		430	241x25x125	**567117J**	**587000J** **587001J**	29011	4x29011					
MP440 E38, MP440 E42*(6x2)* **MP240 E38, MP240 E42***(6x2,6x4)* **MP400 E34, MP400 E42***(4x2)*	92-97	•		**2901104240** **2901109560**		430	241x25x125	**567117J**	**587000J** **587001J**	29011	4x29011					
MP260 E38, MP260 E42*(6x2,6x4)*	94-97	•		**2901104240** **2901109560**		430	241x25x125	**567117J**	**587000J** **587001J**	29011	4x29011					
MP440 E39, MP440 E43 **MP260 E39, MP260 E43***(6x2,6x4)*	99-	•		**2910815390**		436	248x30x109	**567135J**		29105	4x29105					
MP400 E38 *(6x2 Twinsteer ,6x4 Twinsteer)*	92-96	•	•	**2901104240** **2901109560**		430	241x25x125	**567117J**	**587000J** **587001J**	29011	4x29011					
MP400 E38, MP440 E38, **MP440 E42** *(6x2 Twinsteer,6x4 Twinsteer)*	97-	•	•	**2910815390**		436	248x30x109	**567135J**		29105	4x29105					
MP400 E42, MP440 E34 *(6x2 Twinsteer,6x4 Twinsteer)*	92-	•	•	**2901104240** **2901109560**		430	241x25x125	**567117J**	**587000J** **587001J**	29011	4x29011					
MP440 E38, MP440 E42 *(6x2 Twinsteer,6x4 Twinsteer)*	93-96	•	•	**2901104240** **2901109560**		430	241x25x125	**567117J**	**587000J** **587001J**	29011	4x29011					

JURID by Honeywell
© JURID / All rights reserved 2005
© JURID / All rights reserved 2005
JURID by Honeywell

Iveco...

...

Eurotech...

MT180 E24, MT180 E27, MT180 E30, MT180 E34, MT180 E37, MT190 E24, MT190 E27, MT190 E30 **MT325 E, MT400 E30, MT400 E34** *(6x2)*	92-98	•		**1938505380** **1938509530**		381	178x18.6/12.6x189 177.80x18x189.06		**587029J**	19384 19385	6x19384 + 2x19385	6xCW/4/1 + 2xCW/4/2	**8158057001**	**810635J**	96	6.35x15.88x11.9-150°(L10/10-10)
MT180 E24, MT180 E27, MT180 E30, MT180 E34, MT190 E24, MT190 E27, MT190 E30 **MT325 E, MT400 E30, MT400 E34** *(6x2)*	92-96	•		**2901104240** **2901109560**		430	241x25x125	**567117J**	**587000J** **587001J**	29011	4x29011					
	97-98	•		**2910815390**		436	248x30x109	**567135J**		29105	4x29105					
MT180 E37	92-98	•		**2901104240** **2901109560**		430	241x25x125	**567117J**	**587000J** **587001J**	29011	4x29011					

Eurotrakker

MP190 E(⊢⊣ *: Rockwell)* **MP410 E**(⊢⊣ *: Rockwell 8x4)* **MP330 E, MP380 E** (⊢⊣ *: Rockwell 6x4,* ⊢⊣ *: Rockwell 6x6)*		•		**1955303270**		410	200x20.7/13.5x199 200x22.2/13.8x99 200x22.5/15.7x199		**587031J**	19553 19716 19717	4x19553 + 2x19716 + 2x19717	4xRW/29/1 + 2xRW/33/1 + 2xRW/32/1	**8103080005**	**810800J**	96	8x18x15.5-180°
MP330 E, MP380 E (◯ *: Perrot 6x4,*◯ *: Perrot 6x6)* **MP190 E**(◯ *: Perrot)* **MP410 E**(◯ *: Perrot 8x4)*		•		**1926305380** **1926309530**		410	200x21.4/15.9x202.7 200x21.4x202.71		**587030J**	19263 19343	6x19263 + 2x19343	6xPB/24/1 + 2xPB/24/2	**8103080005**	**810800J**	112	8x18x15.5-180°
MP330 E, MP380 E (◯ *: Perrot 6x4,*◯ *: Perrot 6x6)* **MP190 E**(◯ *: Perrot)* **MP410 E, MP720 E37, MP720 E42** (◯ *: Perrot 8x4)*		•		**1926205380** **1926209530**		410	180x21.4/15.9x202.7 180x21.4x202.71		**587030J**	19262 19342	6x19262 + 2x19342	6xPB/25/1 + 2xPB/25/2	**8103080005**	**810800J**	112	8x18x15.5-180°
MP260 E (◯ *: Perrot 6x4,*◯ *: Perrot 6x6)* **MP340 E, MP380 E, MP400 E, MP440 E** (◯ *: Perrot 8x4)*		•	•	**1926205380** **1926209530**		410	180x21.4/15.9x202.7 180x21.4x202.71		**587030J**	19262 19342	6x19262 + 2x19342	6xPB/25/1 + 2xPB/25/2	**8103080005**	**810800J**	112	8x18x15.5-180°
MP380 E, MP400 E, MP440 E (⊢⊣ *: Rockwell 8x4)*		•	•	**1955603270**		410	180x20.7/13.5x199 180x22.2/13.8x199 180x22.5/15.7x199		**587031J**	19556 19714 19715	4x19556 + 2x19714 + 2x19715	4xRW/28/1 + 2xRW/31/1 + 2xRW/30/1	**8103080005**	**810800J**	96	8x18x15.5-180°
MP380 E (⊢⊣ *: Rockwell 6x4,* ⊢⊣ *: Rockwell 6x6)* **MP720 E42**(⊢⊣ *: Rockwell 8x4)*		•		**1955603270**		410	180x20.7/13.5x199 180x22.2/13.8x199 180x22.5/15.7x199		**587031J**	19556 19714 19715	4x19556 + 2x19714 + 2x19715	4xRW/28/1 + 2xRW/31/1 + 2xRW/30/1	**8103080005**	**810800J**	96	8x18x15.5-180°
MP720 E37, MP720 E42 (◯ *: Perrot 8x4)*		•		**1926205380** **1926209530**		410	180x21.4/15.9x202.7 180x21.4x202.71		**587030J**	19262 19342	6x19262 + 2x19342	6xPB/25/1 + 2xPB/25/2	**8103080005**	**810800J**	112	8x18x15.5-180°
MP720 E42(⊢⊣ *: Rockwell 8x4)*		•		**1955603270**		410	180x20.7/13.5x199 180x22.2/13.8x199 180x22.5/15.7x199		**587031J**	19556 19714 19715	4x19556 + 2x19714 + 2x19715	4xRW/28/1 + 2xRW/31/1 + 2xRW/30/1	**8103080005**	**810800J**	96	8x18x15.5-180°

© JURID / All rights reserved 2005

© JURID / All rights reserved 2005

				STOCK →	← STOCK	⌀ mm				WVA	BFMC	JURID	SUPASET	#				
Iveco...																		
M																		
100, 110(NC) **130**(NC,NR,NRH,NT)	73-77	•			**1758903320**	420	125x12.5x241			17589	4x17589		**8103060007**	**810600J**	48	6x15x11.5-180°		
100, 110, 130(NC)	73-77		•		**1758903320**	420	125x12.5x241			17589	4x17589		**8103060007**	**810600J**	48	6x15x11.5-180°		
110.13, 110.16, 130.13, 130.16, 130F13	79-85	•			**1780401820**	394	127x12.7x354			17804	4x17804	4xDO/80/2	**8102060005**		64	6x13.5x12-180°		
	79-85		•		**1962203320**	394	152x12.7x354			19622	4x19622	4xLH/82/2	**8102060004**		64	6x13.5x11-180°		
110, 115.14, 115.17, 130.13, 130.16, 135, 145	85-90	•	•		**1991803320** **1991809530**	360	170x14.0x318			19918	4x19918	4xFI/124/1	**8103080003**	**810800J**	72	8x15x15.5-180°		
120, 130, 140, 150(NR,NT)	77-	•	•		**1788503320** **1788509530**	420	135x11.8x209			17885	8x17885	8xFI/113/1	**8103080005**	**810800J**	64	8x18x15.5-180°		
130(NR,NRH,NT)	73-77		•		**1907203320** **1907209530**	394	152x12.7x362			19072	4x19072	4xGG/83/1	**8158056001**	**810635J**	48	6.35x14.29x11.9-150°(L9/10-9)		
160.17, 160.23 **150.16**(AN,ANW)	80-	•		**1938509580**	**1938505380** **1938501230**	381	177.80x18x189.06		**587029J**	19384 19385	6x19384 + 2x19385	6xCW/4/1 + 2xCW/4/2						
	80-		•	**1938509580**	**1938505380** **1938501230**	381	177.80x18x189.06		**587029J**	19384 19385	6x19384 + 2x19385	6xCW/4/1 + 2xCW/4/2						
159.17, 159.2, 165.24	80-	•	•	**1938509580**	**1938505380** **1938501230**	381	177.80x18x189.06		**587029J**	19384 19385	6x19384 + 2x19385	6xCW/4/1 + 2xCW/4/2						
159NC17, 159NC20, 159U17, 159U20	76-80	•	•		**1786909530**	420	140x12.5x196			17869	8x17869	8xFI/105/1	**8103080007**	**810800J**	64	8x20x15.5-180°		
Stralis																		
440 S40, 440 S43, 440 S48, 440 S54 **260 S40, 260 S43, 260 S48, 260 S54** (6x2)	02-	•	•		**2910815390**	370	248x30x109			29105	4x29105							
T																		
160.26, 170.2, 170.26, 170.35, 190.2, 190.26, 190.35	77-80	•			**1786909530**	420	140x12.5x196			17869	8x17869	8xFI/105/1	**8103080007**	**810800J**	64	8x20x15.5-180°		
	77-80		•		**1969403320** **1969409530**	420	180x12.5x196			19694	8x19694	8xFI/106/1	**8103080007**	**810800J**	128	8x20x15.5-180°		
160(NC,NT,R)	74-	•			**1748203320**	420	125x11.8x397			17482	4x17482	4xFI/94/1	**8103080007**	**810800J**	96	8x20x15.5-180°		
	74-		•		**1549409530**	420	90x11.8x397			15494	4x15494	4xFI/84/1	**8103080003**	**810800J**	64	8x15x15.5-180°		
170.25(AH) **170.23, 170.34**(AH,ANW)	89-	•		**1938509580**	**1938505380** **1938501230**	381	177.80x18x189.06		**587029J**	19384 19385	6x19384 + 2x19385	6xCW/4/1 + 2xCW/4/2						
	89-		•	**1938509580**	**1938505380** **1938501230**	381	177.80x18x189.06		**587029J**	19384 19385	6x19384 + 2x19385	6xCW/4/1 + 2xCW/4/2						
170.26, 170.35, 180.24, 180.26, 190.2, 190.26, 190.35, 220.32	82-92	•		**1938509580**	**1938505380** **1938501230**	381	177.80x18x189.06		**587029J**	19384 19385	6x19384 + 2x19385	6xCW/4/1 + 2xCW/4/2						
170.26, 170.35, 190.2, 190.26, 190.35	80-81	•		**1938509580**	**1938505380** **1938501230**	381	177.80x18x189.06		**587029J**	19384 19385	6x19384 + 2x19385	6xCW/4/1 + 2xCW/4/2						
170.2, 170.26, 170.35, 190.2, 190.35, 220.35, 240.3, 240.38 **190.3**(H,N,NT2,NW) **190.26**(AHW,H,HW,N,NT2,NW) **260.26, 260.3**(AH,H,N) **190.25**(AHW,H,HW,N,NT2,NW) **260.32**(AH,AHT,AHW,H,N)	80-92		•	**1938509580**	**1938505380** **1938501230**	381	177.80x18x189.06		**587029J**	19384 19385	6x19384 + 2x19385	6xCW/4/1 + 2xCW/4/2						

© JURID / All rights reserved 2005

© JURID / All rights reserved 2005



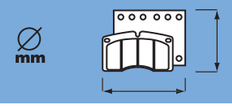
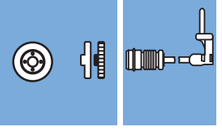



STOCK STOCK ⌀ mm

WVA BFMC

JURID SUPASET #

Iveco...





T...

170.2, 190.38, 240.3, 240.38 **190.3***(H,N,NT2,NW)* **260.23***(AH)* **260.26, 260.3***(AH,H,N)* **190.25, 190.26** *(AHW,H,HW,N,NT2,NW)* **260.32***(AH,AHT,AHW,H,N)*	80-92	•		**1938509580**	**1938505380** **1938501230**	381	177.80x18x189.06	**587029J**	19384 19385	6x19384 + 2x19385	6xCW/4/1 + 2xCW/4/2			
170, 175, 180, 190, 220.38	80-92	•	•	**1938509580**	**1938505380** **1938501230**	381	177.80x18x189.06	**587029J**	19384 19385	6x19384 + 2x19385	6xCW/4/1 + 2xCW/4/2			
175.17, 175.24	86-92	•	•	**1938509580**	**1938505380** **1938501230**	381	177.80x18x189.06	**587029J**	19384 19385	6x19384 + 2x19385	6xCW/4/1 + 2xCW/4/2			
180.24, 180.26, 220.32	82-92		•	**1938509580**	**1938505380** **1938501230**	381	177.80x18x189.06	**587029J**	19384 19385	6x19384 + 2x19385	6xCW/4/1 + 2xCW/4/2			
180*(NC,NT,NTS)*	75-	•		**1520709580**		420	90x8.2x405		15207	4x15207	4xFl/79/1	**8103080003**	**810800J**	64 8x15x15.5-180°
180*(NC,NT,NTS)* **300***(PC,PT)*	75-		•		**1549409530**	420	90x11.8x397		15494	4x15494	4xFl/84/1	**8103080003**	**810800J**	64 8x15x15.5-180°
190.32*(AH,AHT,AHW)*	77-83	•		**1938509580**	**1938505380** **1938501230**	381	177.80x18x189.06	**587029J**	19384 19385	6x19384 + 2x19385	6xCW/4/1 + 2xCW/4/2			
	77-83		•	**1938509580**	**1938505380** **1938501230**	381	177.80x18x189.06	**587029J**	19384 19385	6x19384 + 2x19385	6xCW/4/1 + 2xCW/4/2			
190.3, 190.38, 220.38, 240.3, 240.38	80-84		•	**1938509580**	**1938505380** **1938501230**	381	177.80x18x189.06	**587029J**	19384 19385	6x19384 + 2x19385	6xCW/4/1 + 2xCW/4/2			
	85-92		•	**1938509580**	**1938505380** **1938501230**	381	177.80x18x189.06	**587029J**	19384 19385	6x19384 + 2x19385	6xCW/4/1 + 2xCW/4/2			
190PAC20	75-85	•		**1938509580**	**1938505380** **1938501230**	381	177.80x18x189.06	**587029J**	19384 19385	6x19384 + 2x19385	6xCW/4/1 + 2xCW/4/2			
	75-85		•	**1938509580**	**1938505380** **1938501230**	381	177.80x18x189.06	**587029J**	19384 19385	6x19384 + 2x19385	6xCW/4/1 + 2xCW/4/2			
220.35	80-81	•	•	**1938509580**	**1938505380** **1938501230**	381	177.80x18x189.06	**587029J**	19384 19385	6x19384 + 2x19385	6xCW/4/1 + 2xCW/4/2			
220.3, 220.35	82-92	•	•	**1938509580**	**1938505380** **1938501230**	381	177.80x18x189.06	**587029J**	19384 19385	6x19384 + 2x19385	6xCW/4/1 + 2xCW/4/2			
260.23*(AH)*	80-90		•	**1938509580**	**1938505380** **1938501230**	381	177.80x18x189.06	**587029J**	19384 19385	6x19384 + 2x19385	6xCW/4/1 + 2xCW/4/2			
	90-92		•	**1938509580**	**1938505380** **1938501230**	381	177.80x18x189.06	**587029J**	19384 19385	6x19384 + 2x19385	6xCW/4/1 + 2xCW/4/2			
260.25*(AHB,ANW)*	80-89	•		**1938509580**	**1938505380** **1938501230**	381	177.80x18x189.06	**587029J**	19384 19385	6x19384 + 2x19385	6xCW/4/1 + 2xCW/4/2			
260.25*(AH,AHB 3500 mm)*	90-	•		**1938509580**	**1938505380** **1938501230**	381	177.80x18x189.06	**587029J**	19384 19385	6x19384 + 2x19385	6xCW/4/1 + 2xCW/4/2			
260.25*(AHB,ANW)*	80-89		•	**1938509580**	**1938505380** **1938501230**	381	177.80x18x189.06	**587029J**	19384 19385	6x19384 + 2x19385	6xCW/4/1 + 2xCW/4/2			
260.25*(AH,AHB 3500 mm)*	90-		•	**1938509580**	**1938505380** **1938501230**	381	177.80x18x189.06	**587029J**	19384 19385	6x19384 + 2x19385	6xCW/4/1 + 2xCW/4/2			
300.32, 300.34, 340.34 **320.32***(AHB)* **300.3***(AH,AHB)* **330.4***(4x4)* **330.25, 330.26, 330.32, 330.35, 330.36, 330.3** *(4x4)*	80-	•		**1938509580**	**1938505380** **1938501230**	381	177.80x18x189.06	**587029J**	19384 19385	6x19384 + 2x19385	6xCW/4/1 + 2xCW/4/2			

JURID by Honeywell

© JURID / All rights reserved 2005

© JURID / All rights reserved 2005

JURID by Honeywell

Iveco...

				STOCK	STOCK	⌀ mm				WVA	BFMC	JURID	SUPASET	#		
T...																
300.32, 300.34, 330.25, 330.26, 330.3, 330.32, 330.35, 330.36, 340.34 **320.32** *(AHB)* **300.3** *(AH,AHB)* **330.4** *(4x4)*	80-		•	**1938509580**	**1938505380** **1938501230**	381	177.80x18x189.06		**587029J**	19384 19385	6x19384 + 2x19385	6xCW/4/1 + 2xCW/4/2				
300 *(PC,PT)*	75-	•			**1748203320**	420	125x11.8x397			17482	4x17482	4xFI/94/1	**8103080007**	**810800J**	96	8x20x15.5-180°
Turbostar																
190.24, 190.26, 190.3, 190.32, 190.33, 190.36, 190.42, 190.48	87-	•	•	**1938509580**	**1938505380** **1938501230**	381	177.80x18x189.06		**587029J**	19384 19385	6x19384 + 2x19385	6xCW/4/1 + 2xCW/4/2				
220.32, 220.36, 240.26, 240.32, 240.36, 240.48, 260.32, 260.36, 260.48	90-	•	•	**1938509580**	**1938505380** **1938501230**	381	177.80x18x189.06		**587029J**	19384 19385	6x19384 + 2x19385	6xCW/4/1 + 2xCW/4/2				
240.32, 240.36	90-		•	**1938509580**	**1938505380** **1938501230**	381	177.80x18x189.06		**587029J**	19384 19385	6x19384 + 2x19385	6xCW/4/1 + 2xCW/4/2				
Turbotech																
190.24, 190.26, 190.3, 190.32, 190.33, 190.36, 190.42, 190.48	87-	•	•	**1938509580**	**1938505380** **1938501230**	381	177.80x18x189.06		**587029J**	19384 19385	6x19384 + 2x19385	6xCW/4/1 + 2xCW/4/2				
220.32, 220.36, 240.26, 240.32, 240.36, 240.48, 260.32, 260.36, 260.48	90-	•	•	**1938509580**	**1938505380** **1938501230**	381	177.80x18x189.06		**587029J**	19384 19385	6x19384 + 2x19385	6xCW/4/1 + 2xCW/4/2				
240.32, 240.36	90-		•	**1938509580**	**1938505380** **1938501230**	381	177.80x18x189.06		**587029J**	19384 19385	6x19384 + 2x19385	6xCW/4/1 + 2xCW/4/2				
Z																
100.13, 100F13, OM13	79-	•			**1780401820**	394	127x12.7x354			17804	4x17804	4xDO/80/2	**8102060005**		64	6x13.5x12-180°
	79-		•		**1962203320**	394	152x12.7x354			19622	4x19622	4xLH/82/2	**8102060004**		64	6x13.5x11-180°
100F13, 100U13 *(F,NC)*	73-79	•			**1555803320**	420	90x12.5x421			15558	4x15558	4xFI/80/1	**8103080003**	**810800J**	64	8x15x15.5-180°
	73-79		•		**1758903320**	420	125x12.5x241			17589	4x17589		**8103060007**	**810600J**	48	6x15x11.5-180°
109.14 *(Zeta)*	83-88	•			**1787903320**	325	140x12.0x249 140x12.0x288			17879 17880	2x17879 + 2x17880	2xFI/126/1 + 2xFI/125/1	**8103060003**	**810600J**	52	6x12x11.5-180°
	88-92	•			**2906709560**	322	175.5x22x78			29067	4x29067					
	83-88		•	**1982109580**		325	160x12.5x288 160x12.5x249			19821 19822	2x19821 + 2x19822	2xSY/34/1 + 2xSY/33/1	**8103060007**	**810600J**	52	6x15x11.5-180°
	88-92		•	**1982109580**		325	160x12.5x288 160x12.5x249			19821 19822	2x19821 + 2x19822	2xSY/34/1 + 2xSY/33/1	**8103060007**	**810600J**	52	6x15x11.5-180°
40, 50.1, 50.8, 50.9, 55.1, 55.8, 55.9	73-82	•	•		**1573205380**	325	80x7.0x298 80x7.0x257			15732 15733	2x15732 + 2x15733	2xFI/101/1 + 2xFI/100/1	**8103060003**	**810600J**	52	6x12x11.5-180°
50.1, 50.8, 50.9, 60.1, 60.11, 60.8, 65.1, 65.12, 65.9	83-90	•	•		**1792403320** **1792409530**	325	100x12.0x249 100x12.0x288			17924 17925	2x17924 + 2x17925	2xFI/120/1 + 2xFI/121/1	**8103060003**	**810600J**	52	6x12x11.5-180°
50.9, 65.12, 79.1, 79.12, 79.13	80-82	•	•		**1763503320** **1763509530**	325	120x12.0x249 120x12.0x288			17635 17636	2x17635 + 2x17636	2xSY/20/2 + 2xSY/26/1	**8103060003**	**810600J**	52	6x12x11.5-180°
60.1, 60.8	73-82	•			**1740805380** **1740801820**	325	100x8.2x255			17408	4x17408	4xFI/104/1	**8103060003**	**810600J**	48	6x12x11.5-180°
	78-82		•		**1573205380**	325	80x7.0x298 80x7.0x257			15732 15733	2x15732 + 2x15733	2xFI/101/1 + 2xFI/100/1	**8103060003**	**810600J**	52	6x12x11.5-180°
65.12, 65.14, 79.1, 79.12, 79.13, 79.14	83-90	•			**2901709560**	315	191x23x87	**569124J**		29017	4x29017					
	83-90		•		**1763503320** **1763509530**	325	120x12.0x249 120x12.0x288			17635 17636	2x17635 + 2x17636	2xSY/20/2 + 2xSY/26/1	**8103060003**	**810600J**	52	6x12x11.5-180°

JURID by Honeywell

© JURID / All rights reserved 2005

© JURID / All rights reserved 2005

JURID by Honeywell

Iveco...

...

Z...

65.12, 79.12 *(Turbo Zeta)*	87-90	•		**2902409561**		315	191x23x87	**569124J**		29024	4x29024					
	87-90		•	**1763503320** **1763509530**		325	120x12.0x249 120x12.0x288			17635 17636	2x17635 + 2x17636	2xSY/20/2 + 2xSY/26/1	**8103060003**	**810600J**	52	6x12x11.5-180°
70.1, 75.1 **65.1** *(NC)*	73-82	•	•	**1740805380** **1740801820**		325	100x8.2x255			17408	4x17408	4xFI/104/1	**8103060003**	**810600J**	48	6x12x11.5-180°
75.9	85-89	•		**1782903320** **1782909530**		310	100x9.5x245 100x9.5x209			17829 17830	2x17829 + 2x17830	2xBT/76/1 + 2xSA/25/1	**8102050009**	**810500J**	56	5x13x9.5-180°
	85-89		•	**1783103320**		310	125x10.0x209 125x10.0x245			17831 17832	2x17831 + 2x17832	2xSA/27/1 + 2xSA/26/1	**8102050009**	**810500J**	64	5x13x9.5-180°
75F13, 75U13, 80.13, 80F13, 80U13, 90.13, 90F13, 90U13	78-83	•		**1709403320**		400	100x10.1x331			17094	4x17094	4xSY/7/1	**8103080003**	**810800J**	48	8x15x15.5-180°
	78-83		•	**1778105380**		400	100x8.0x367 100x8.0x317			17781 17782	2x17781 + 2x17782	2xFI/109/1 + 2xFI/108/1	**8103060003**	**810600J**	52	6x12x11.5-180°
80.13, 80.16, 90.13	84-91	•	•	**1763503320** **1763509530**		325	120x12.0x249 120x12.0x288			17635 17636	2x17635 + 2x17636	2xSY/20/2 + 2xSY/26/1	**8103060003**	**810600J**	52	6x12x11.5-180°
	84-91	•		**1787903320**		325	140x12.0x249 140x12.0x288			17879 17880	2x17879 + 2x17880	2xFI/126/1 + 2xFI/125/1	**8103060003**	**810600J**	52	6x12x11.5-180°
80.9 *(NC,NT)*	73-77	•		**1709403320**		400	100x10.1x331			17094	4x17094	4xSY/7/1	**8103080003**	**810800J**	48	8x15x15.5-180°
	73-77		•	**1778105380**		400	100x8.0x367 100x8.0x317			17781 17782	2x17781 + 2x17782	2xFI/109/1 + 2xFI/108/1	**8103060003**	**810600J**	52	6x12x11.5-180°
95.14 *(Zeta)*	83-88	•		**2906709560**		322	175.5x22x78			29067	4x29067					
	88-90	•		**1787903320**		325	140x12.0x249 140x12.0x288			17879 17880	2x17879 + 2x17880	2xFI/126/1 + 2xFI/125/1	**8103060003**	**810600J**	52	6x12x11.5-180°
	83-90		•	**1787903320**		325	140x12.0x249 140x12.0x288			17879 17880	2x17879 + 2x17880	2xFI/126/1 + 2xFI/125/1	**8103060003**	**810600J**	52	6x12x11.5-180°

240 *(Lorraine)*		•	•	**1975405380** **1975403320**		410	200x18.0/11.2x207			19754	8x19754	8xFI/115/1	**8103100003**	**811000J**	96	10x20x18-180°
260 *(Lorraine)*		•		**1786909530**		420	140x12.5x196			17869	8x17869	8xFI/105/1	**8103080007**	**810800J**	64	8x20x15.5-180°
			•	**1969403320** **1969409530**		420	180x12.5x196			19694	8x19694	8xFI/106/1	**8103080007**	**810800J**	128	8x20x15.5-180°
308, 309, 320 *(series 1)*		•		**1549409530**		420	90x11.8x397			15494	4x15494	4xFI/84/1	**8103080003**	**810800J**	64	8x15x15.5-180°
			•	**1732303320**		420	140x12.5x422			17323	4x17323	4xFI/81/1	**8103080003**	**810800J**	64	8x15x15.5-180°
314	-70	•		**1520709580**		420	90x8.2x405			15207	4x15207	4xFI/79/1	**8103080003**	**810800J**	64	8x15x15.5-180°
314, 414, 416	70-	•		**1555803320**		420	90x12.5x421			15558	4x15558	4xFI/80/1	**8103080003**	**810800J**	64	8x15x15.5-180°
	70-		•	**1758903320**		420	125x12.5x241			17589	4x17589		**8103060007**	**810600J**	48	6x15x11.5-180°
315.13, 316.13	77-	•		**1775805380** **1775803270**		332	120x8.1x255			17758	4x17758	4xMF/24/1	**8103060007**	**810600J**	48	6x15x11.5-180°
	77-		•	**1775903270**		325	120x8.1x255			17759	4x17759	4xMF/24/1	**8103060007**	**810600J**	48	6x15x11.5-180°
315.8.17		•		**2968805440**		315	109.6x25x99	**567119J**		29688	8x29688					
		•		**2978205440**		315	109.6x27.5x99	**567119J**		29782	8x29782					
331A, 343A, 343GT, 420A	70-	•		**1748203320**		420	125x11.8x397			17482	4x17482	4xFI/94/1	**8103080007**	**810800J**	96	8x20x15.5-180°
	70-		•	**1549409530**		420	90x11.8x397			15494	4x15494	4xFI/84/1	**8103080003**	**810800J**	64	8x15x15.5-180°
370.11 *(25)* **370.12** *(25,35)*	79-83	•	•	**1982305380** **1982303320**		410	200x18.0/12.0x207 200x18.9x207.87			19823 19786	2x19823 + 6x19786	2xPB/34/2 + 6xPB/34/1	**8103100002**	**811000J**	112	10x18x18-180°

© JURID / All rights reserved 2005

© JURID / All rights reserved 2005

Iveco...

				STOCK	STOCK	mm					WVA	BFMC	JURID	SUPASET	#			
...																		
370.12 *(26)*	78-79	•	•		**1975405380** **1975403320**		410	200x18.0/11.2x207			19754	8x19754	8xFI/115/1	**8103100003**	**811000J**	96	10x20x18-180°
	75-78	•			**1786909530**		420	140x12.5x196			17869	8x17869	8xFI/105/1	**8103080007**	**810800J**	64	8x20x15.5-180°
	75-78		•		**1969403320** **1969409530**		420	180x12.5x196			19694	8x19694	8xFI/106/1	**8103080007**	**810800J**	128	8x20x15.5-180°
370.1 *(20)*	77-	•			**1788503320** **1788509530**		420	135x11.8x209			17885	8x17885	8xFI/113/1	**8103080005**	**810800J**	64	8x18x15.5-180°
370.11, 370.12, 370.1 *(24,25,30,36)*	83-	•			**1982305380** **1982303320**		410	200x18.0/12.0x207 200x18.9x207.87			19823 19786	2x19823 + 6x19786	2xPB/34/2 + 6xPB/34/1	**8103100002**	**811000J**	112	10x18x18-180°
	83-		•		**1982403320**		410	220x19.0/13.0x207			19824	8x19824	8xPB/35/1	**8103100002**	**811000J**	112	10x18x18-180°
370.25, 370.3, 370.35, 380.29, 380.35	84-	•			**2907503341** **2907509561**		417	179.5x20x106	**567120J**		29075	8x29075					
	84-		•		**1983805380** **1983809530**		410	220x18.0/12.0x207 220x18.6x207.17			19824 19838	6x19824 + 2x19838	6xPB/35/1 + 2xPB/35/2	**8103100002**	**811000J**	112	10x18x18-180°
470.1, 470.2, 570.1, 570.12, 570.2, 670.1	79-	•		**1938509580**	**1938505380**		381	177.80x18x189.06		**587029J**	19384 19385	6x19384 + 2x19385	6xCW/4/1 + 2xCW/4/2				
470.1, 471.12 *(20)*	84-88	•		**2901605440**			425	160x28x111	**567131J**		29016	4x29016					
	84-88		•		**1982305380** **1982303320**		410	200x18.0/12.0x207 200x18.9x207.87			19823 19786	2x19823 + 6x19786	2xPB/34/2 + 6xPB/34/1	**8103100002**	**811000J**	112	10x18x18-180°
471, 571, 671, 680	84-88	•			**2901605441** **2901609561**			160x28x111			29016	8x29016					
480.21, 490.12, 490.22, 580.21, 680.26 *(Turbo,Turbocity)*	86-	•			**2901605441** **2901609561**		425	160x28x111	**567130J**		29016	8x29016					
	86-		•		**1982305380** **1982303320**		410	200x18.0/12.0x207 200x18.9x207.87			19823 19786	2x19823 + 6x19786	2xPB/34/2 + 6xPB/34/1	**8103100002**	**811000J**	112	10x18x18-180°
480, 580	88-	•			**2901605441** **2901609561**			160x28x111			29016	8x29016					
490	92-	•			**2901605441** **2901609561**			160x28x111			29016	8x29016					
55	98-	•			**2901605441** **2901609561**			160x28x111			29016	8x29016					
571.1, 571.12, 671.12	85-	•		**2901605440**			425	160x28x111	**567131J**		29016	4x29016					
	85-		•	**1938509580**	**1938505380**		381	177.80x18x189.06		**587029J**	19384 19385	6x19384 + 2x19385	6xCW/4/1 + 2xCW/4/2				
670.12	79-		•	**1938509580**	**1938505380**		381	177.80x18x189.06		**587029J**	19384 19385	6x19384 + 2x19385	6xCW/4/1 + 2xCW/4/2				
A55.10	77-82	•	•		**1573205380**		325	80x7.0x298 80x7.0x257			15732 15733	2x15732 + 2x15733	2xFI/101/1 + 2xFI/100/1	**8103060003**	**810600J**	52	6x12x11.5-180°
	82-84	•	•		**1792403320** **1792409530**		325	100x12.0x249 100x12.0x288			17924 17925	2x17924 + 2x17925	2xFI/120/1 + 2xFI/121/1	**8103060003**	**810600J**	52	6x12x11.5-180°
	84-		•		**1763503320** **1763509530**		325	120x12.0x249 120x12.0x288			17635 17636	2x17635 + 2x17636	2xSY/20/2 + 2xSY/26/1	**8103060003**	**810600J**	52	6x12x11.5-180°
	84-		•		**1792403320** **1792409530**		325	100x12.0x249 100x12.0x288			17924 17925	2x17924 + 2x17925	2xFI/120/1 + 2xFI/121/1	**8103060003**	**810600J**	52	6x12x11.5-180°
A55.13, A60.10, A70.12	77-82	•			**1763503320** **1763509530**		325	120x12.0x249 120x12.0x288			17635 17636	2x17635 + 2x17636	2xSY/20/2 + 2xSY/26/1	**8103060003**	**810600J**	52	6x12x11.5-180°
	82-84	•			**1763503320** **1763509530**		325	120x12.0x249 120x12.0x288			17635 17636	2x17635 + 2x17636	2xSY/20/2 + 2xSY/26/1	**8103060003**	**810600J**	52	6x12x11.5-180°
	77-82		•		**1776405380**		325	100x8.2x296 100x8.2x255			17764 17408	2x17764 + 2x17408	2xOM/12/1 + 2xFI/102/1	**8103060003**	**810600J**	52	6x12x11.5-180°
	82-84		•		**1792403320** **1792409530**		325	100x12.0x249 100x12.0x288			17924 17925	2x17924 + 2x17925	2xFI/120/1 + 2xFI/121/1	**8103060003**	**810600J**	52	6x12x11.5-180°

© JURID / All rights reserved 2005

© JURID / All rights reserved 2005

				→STOCK STOCK→		∅ mm					WVA	BFMC	JURID	SUPASET	#	

Iveco...

...

A60.10, A70.12	84-	•	•	**1763503320** **1763509530**		325	120x12.0x249 120x12.0x288			17635 17636	2x17635 + 2x17636	2xSY/20/2 + 2xSY/26/1	**8103060003**	**810600J**	52	6x12x11.5-180°
A90.13	81-	•		**1709403320**		400	100x10.1x331			17094	4x17094	4xSY/7/1	**8103080003**	**810800J**	48	8x15x15.5-180°
	81-		•	**1778105380**		400	100x8.0x367 100x8.0x317			17781 17782	2x17781 + 2x17782	2xFI/109/1 + 2xFI/108/1	**8103060003**	**810600J**	52	6x12x11.5-180°
A90.14	84-	•	•	**1787903320**		325	140x12.0x249 140x12.0x288			17879 17880	2x17879 + 2x17880	2xFI/126/1 + 2xFI/125/1	**8103060003**	**810600J**	52	6x12x11.5-180°
Euroclass *(380)* **Eurorider** **City class** *(491)*	92-	•		**2907503341** **2907509561**		417	179.5x20x106	**567134J**		29075	8x29075					
Scolabus	97-	•		**2903204240** **2903209560**		370	206x25x107	**567125J**	**587000J** **587001J**	29032	4x29032					

Iveco (Fiat)

Ducato

1.8, 1.9D, 1.9TD, 2.5D, 2.5TD, 2 *(◯ : Brembo)*	81-94	•		**571325J**		256	109.5x18.3x73	**561321J**		21049	4x21049					
1.8, 1.9D, 1.9TD, 2.5D, 2.5TD, 2 *(◯ : Girling)*	81-94	•		**571393J**		256	144.9x19.7x71.8	**561321J**		21206	4x21049					
1.8, 1.9D, 1.9TD, 2, 2.5D, 2.5TD	81-94		•	**361283J**		254	254x57									
	87-94		•	**361430B**		254	254x57									
1.9D, 1.9TD, 2.0i, 2.5D, 2.5TDI, 2.8D, 2.8JTD, 2.8TDI *(1.4t,1t)*	02-	•		**573113**			140.8x19x66									
	99-01	•		**573060**		280	113.4x19.5x56.3	**561984J**		21627	4x21627					
1.9D, 1.9TD, 2.0i, 2.5D, 2.5TDI, 2.8D, 2.8JTD, 2.8TDI *(1t - 1.8t)*	02-		•	**573115**			146.7x20x59.5									
1.9D, 1.9TD, 2.0i, 2.5D, 2.5TDi	94-99	•		**571839J**		280	145x19.5x59	**561984J**		21797	4x21797					
	94-99	•		**571839J**		280	145x19.5x59	**561992J**		21797	4x21797					
	94-99		•	**362337J**		254	254x57									
2.0JTD	10/01-04/02		•			280		**562215**								
2.0JTD, 2.3JTD, 2.8JTD *(1.8t)*	02-	•		**573114**			164.8x19x69.3									
2.0i, 2.5D, 2.5TDI, 2.8D, 2.8JTD, 2.8TDI *(1.8t)*	99-01	•		**573061**		300	127.6x19.5x55	**561969J**		21799	4x21799					
2.5TDi *(Maxi M2B)*	94-99	•		**571840J**		300	160x19.5x62.8	**561969J**		21799	4x21799					
	94-99		•	**362338J**		254	254x57									
2.8JTD *(4x4)*	11/00-04/02		•			280		**562215**								
2.5TD, 2 *(Maxi ◯ : Brembo)*	86-94	•		**571325J**		290	109.5x18.3x73	**561339J**		21049	4x21049					
2.5TD, 2 *(Maxi ◯ : Girling)*	86-94	•		**571393J**		290	144.9x19.7x71.8	**561339J**		21206	4x21049					
2.5TD, 2 *(Maxi)*	86-94		•	**361430B**		254	254x57									

JURID by Honeywell
© JURID / All rights reserved 2005
© JURID / All rights reserved 2005
JURID by Honeywell

				STOCK	STOCK	mm				WVA	BFMC	JURID	SUPASET	#	

Iveco (Fiat)...

Ducato...															
(O) : Lucas/Meritor Except Maxi	81-84		•	**361283J**		254	254x57								
Scudo															
1.9D, 1.9TD, 2.0TD, 2(O) *: Bendix)*	96-		•	**571843J**		257	139.8x19x69	**562033J**		23003	4x23003				
619															
	65-70		•	**1758903320**		420	125x12.5x241			17589	4x17589		**8103060007**	**810600J**	48	6x15x11.5-180°
	70-		•	**1748203320**		420	125x11.8x397			17482	4x17482	4xFI/94/1	**8103080007**	**810800J**	96	8x20x15.5-180°
	65-70		•	**1555803320**		420	90x12.5x421			15558	4x15558	4xFI/80/1	**8103080003**	**810800J**	64	8x15x15.5-180°
	70-		•	**1549409530**		420	90x11.8x397			15494	4x15494	4xFI/84/1	**8103080003**	**810800J**	64	8x15x15.5-180°
643															
	70-		•	**1748203320**		420	125x11.8x397			17482	4x17482	4xFI/94/1	**8103080007**	**810800J**	96	8x20x15.5-180°
	70-		•	**1549409530**		420	90x11.8x397			15494	4x15494	4xFI/84/1	**8103080003**	**810800J**	64	8x15x15.5-180°
645															
	66-	•	•	**1555803320**		420	90x12.5x421			15558	4x15558	4xFI/80/1	**8103080003**	**810800J**	64	8x15x15.5-180°
650															
	66-	•	•	**1555803320**		420	90x12.5x421			15558	4x15558	4xFI/80/1	**8103080003**	**810800J**	64	8x15x15.5-180°
662															
	71-	•	•	**1758903320**		420	125x12.5x241			17589	4x17589		**8103060007**	**810600J**	48	6x15x11.5-180°
672															
	71-	•	•	**1758903320**		420	125x12.5x241			17589	4x17589		**8103060007**	**810600J**	48	6x15x11.5-180°
673															
	71-	•	•	**1758903320**		420	125x12.5x241			17589	4x17589		**8103060007**	**810600J**	48	6x15x11.5-180°
683															
	70-		•	**1748203320**		420	125x11.8x397			17482	4x17482	4xFI/94/1	**8103080007**	**810800J**	96	8x20x15.5-180°
	70-		•	**1549409530**		420	90x11.8x397			15494	4x15494	4xFI/84/1	**8103080003**	**810800J**	64	8x15x15.5-180°
693															
	70-		•	**1748203320**		420	125x11.8x397			17482	4x17482	4xFI/94/1	**8103080007**	**810800J**	96	8x20x15.5-180°
	70-		•	**1549409530**		420	90x11.8x397			15494	4x15494	4xFI/84/1	**8103080003**	**810800J**	64	8x15x15.5-180°
697															
	70-		•	**1748203320**		420	125x11.8x397			17482	4x17482	4xFI/94/1	**8103080007**	**810800J**	96	8x20x15.5-180°
	70-		•	**1549409530**		420	90x11.8x397			15494	4x15494	4xFI/84/1	**8103080003**	**810800J**	64	8x15x15.5-180°

JURID by Honeywell
© JURID / All rights reserved 2005
© JURID / All rights reserved 2005
JURID by Honeywell


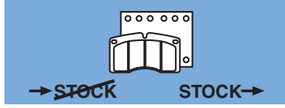

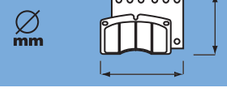

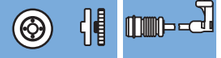




Iveco (Magirus)




130D*(D11)*	75-	•	**1727505380**	400	120x10.1x331		17275	4x17275	4xKM/10/1	**8103080003**	**810800J**	48	8x15x15.5-180°
130D, 130M, 160M, 168M, 192M, 200D, 232D *(D13,M11,M13)*	75-	•	**1780401820**	394	127x12.7x354		17804	4x17804	4xDO/80/2	**8102060005**		64	6x13.5x12-180°
	75-	•	**1962203320**	394	152x12.7x354		19622	4x19622	4xLH/82/2	**8102060004**		64	6x13.5x11-180°
290M*(M 19 FAK,M 19 FK,M 22)* **256D** *(D16,D19 A,D19 AK,D19 F,* *D19 K,D19 L,D19 S,D22,D26)* **320D***(D20,D21,D22,D26,D32,D34)* **320M** *(M 19,M 22,M 26 FAK,M 26 FK,* *M 33 AK,M 33 AS,M 33 F,* *M 33 K,M 33 L)* **360M, 400M** *(M 33 AK,M 33 AS,M 33 F,* *M 33 K,M 33 L)* **280M***(M 16,M 26)* **270D***(D16,D17,D26)*													
290D*(D26)* **170D** *(D15,D17AK,D17FAK,D17FK,D17K,* *D19 A,D19 AK,D19 F,D19 K,* *D19 L,D19 S,D24)* **130D, 160D***(D15,D15AK,D15K)* **256M** *(M 19 FAK,M 19 FK,M 19 FL,* *M 19 FS,M 22,M 22 FAK,M 22 FK,* *M 22 FS,M 22 K,M 22 L,M 22 S,* *M 26 AK,M 26 FB,M 33)* **310D** *(D16,D19 A,D19 AK,D19 F,D19 K* *,D19 L,D19 S,D20,D21,D22,D26,* *D28,D32,D34)* **232D** *(D15,D16,D17,D19 A,D19 AK,* *D19 F,D19 K,D19 L,D19 S,D20,* *D21,D22,D24,D26,D28,D32,D34)*	75-	•	**1938509580**	**1938505380** **1938501230**	381	177.80x18x189.06	**587029J**	19384 19385	6x19384 + 2x19385	6xCW/4/1 + 2xCW/4/2			

© JURID / All rights reserved 2005

© JURID / All rights reserved 2005

				STOCK	STOCK	mm				WVA	BFMC	JURID	SUPASET	#	

Iveco (Magirus)...

...

256M *(M 19 FA,M 19 FL,M 19 FAK, M 19 FS,M 22,M 26 AK,M 26 FAK, M 26 FB,M 26 FK,M 26 FS,M 26 K, M 26 L,M 26 S,M 33)* **360M, 400M** **290M** *(M 19 FA,M 19 FAK,M 22)* **320M** *(M 19 FL,M 19 FS,M 19 FS, M 22,M 26 FAK,M 26 FK)* **280M** *(M 16,M 26)* **320D** *(D20,D21,D22 FB,D22 FL, D22 FS,D26,D32,D34)* **270D** *(D16,D17,D26)* **290D** *(D26)* **310D** *(D16,D19,D20,D21,D22 FB, D22 FL,D22 FS,D26,D28,D32,D34)* **232D** *(D15,D16,D17,D19,D20,D21, D22 FB,D22 FL,D22 FS, D24,D26,D28,D32,D34)* **160D** *(D15,D15AK,D15K)* **170D** *(D15,D17AK,D17FAK,D17FK,D17K, D19,D24)* **130D** *(D11,D15,D15AK,D15K)* **256D** *(D16,D19,D22 FB,D22 FL, D22 FS,D26)*	75-	•		**1938509580**	**1938505380** **1938501230**	381	177.80x18x189.06	**587029J**	19384 19385	6x19384 + 2x19385	6xCW/4/1 + 2xCW/4/2				
130M, 160M, 90M *(M8,M9)*	75-	•			**1782705380** **1782709530**	325	120x12.5x251 120x12.5x209		17827 17828	2x17827 + 2x17828	2xSA/28/1 + 2xSA/29/1	**8102050009**	**810500J**	60	5x13x9.5-180°
	75-		•		**1962005380**	325	150x12.5x209.4 150x12.5x251.3		19620 19621	2x19620 + 2x19621	2xSA/30/1 + 2xSA/31/1	**8102050009**	**810500J**	64	5x13x9.5-180°
150, 156, 168, 175, 186, 190, 192, 195, 235, 250, 260 **170D** *(D21)*	75-	•	•	**1938509580**	**1938505380** **1938501230**	381	177.80x18x189.06	**587029J**	19384 19385	6x19384 + 2x19385	6xCW/4/1 + 2xCW/4/2				
90D, 90M *(5.2,5.3,5.6,5.7)*	75-	•	•		**1573205380**	325	80x7.0x298 80x7.0x257		15732 15733	2x15732 + 2x15733	2xFI/101/1 + 2xFI/100/1	**8103060003**	**810600J**	52	6x12x11.5-180°
90D, 90M *(6,6.5,6.6,7.5)*	75-	•	•		**1740805380** **1740801820**	325	100x8.2x255		17408	4x17408	4xFI/104/1	**8103060003**	**810600J**	48	6x12x11.5-180°
90M *(7.9)*	80-	•	•		**1763503320** **1763509530**	325	120x12.0x249 120x12.0x288		17635 17636	2x17635 + 2x17636	2xSY/20/2 + 2xSY/26/1	**8103060003**	**810600J**	52	6x12x11.5-180°
90M *(M6,M7)*	07/75-	•			**1782903320** **1782909530**	310	100x9.5x245 100x9.5x209		17829 17830	2x17829 + 2x17830	2xBT/76/1 + 2xSA/25/1	**8102050009**	**810500J**	56	5x13x9.5-180°
	07/75-		•		**1783103320**	310	125x10.0x209 125x10.0x245		17831 17832	2x17831 + 2x17832	2xSA/27/1 + 2xSA/26/1	**8102050009**	**810500J**	64	5x13x9.5-180°
M120, M130, M150, M170, M180, M200	68-75		•		**1726905380** **1726909530**	400	140x12.1x321 140x12.1x425		17269 17270	4x17269 + 4x17270	4xBC/32/1 + 4xBC/33/1	**8103080003**	**810800J**	112	8x15x15.5-180°
M126 *(D15)*	68-75	•			**1727505380**	400	120x10.1x331		17275	4x17275	4xKM/10/1	**8103080003**	**810800J**	48	8x15x15.5-180°

JURID by Honeywell
© JURID / All rights reserved 2005
© JURID / All rights reserved 2005
JURID by Honeywell

Iveco (Magirus)...

M156, M170, M200, M210, M230, M232, M250, M270, M290, M310, M340 **M126***(D15)*	68-75		•		**1915303270**	440	160x15.0x382 160x15.0x339		19153 19154	2x19153 + 2x19154	2xMF/14/1 + 2xMF/13/1	**8103080007**	**810800J**	60	8x20x15.5-180°
M156, M170, M200, M210, M230, M232, M250, M270, M290, M310, M340	68-75	•			**1738903270**	420	140x14.0x386		17389	4x17389	4xKM/12/1	**8146100005**		56	10x18x17.5-180°(BR)
M70, M75, M80*(D6)*	69-	•	•		**1515005380**	325	80x7.2x257 80X7.20x338.16		15150 15174	2x15150 + 2x15174	2xBC/62/1 + 2xBC/63/1	**8103060003**	**810600J**	56	6x12x11.5-180°
15, L, N, Orsetto*(Bus)*	68-		•		**1515005380**	325	80x7.2x257 80X7.20x338.16		15150 15174	2x15150 + 2x15174	2xBC/62/1 + 2xBC/63/1	**8103060003**	**810600J**	56	6x12x11.5-180°
230T*(T 117 Bus)* **260E, 280E***(E 113 Bus)*	77-	•		**1938509580**	**1938505380**	381	177.80x18x189.06	**587029J**	19384 19385	6x19384 + 2x19385	6xCW/4/1 + 2xCW/4/2				
260 *(SH 110 Bus,SH 170 Bus, T 117 Bus)* **260L***(L 117 Bus)* **230E** *(E 113 Bus,E 117 Bus,EV 120 Bus, L 117 Bus,SH 110 Bus)*	77-		•	**1938509580**	**1938505380**	381	177.80x18x189.06	**587029J**	19384 19385	6x19384 + 2x19385	6xCW/4/1 + 2xCW/4/2				
90M65*(Bus)*	79-	•			**1782903320** **1782909530**	310	100x9.5x245 100x9.5x209		17829 17830	2x17829 + 2x17830	2xBT/76/1 + 2xSA/25/1	**8102050009**	**810500J**	56	5x13x9.5-180°
	79-		•		**1783103320**	310	125x10.0x209 125x10.0x245		17831 17832	2x17831 + 2x17832	2xSA/27/1 + 2xSA/26/1	**8102050009**	**810500J**	64	5x13x9.5-180°
L81, R81*(Bus)*	-09/80	•			**1775805380** **1775803270**	332	120x8.1x255		17758	4x17758	4xMF/24/1	**8103060007**	**810600J**	48	6x15x11.5-180°
	-09/80		•		**1775903270**	325	120x8.1x255		17759	4x17759	4xMF/24/1	**8103060007**	**810600J**	48	6x15x11.5-180°
Lupetto A14L*(Bus)*		•	•		**1515005380**	325	80x7.2x257 80X7.20x338.16		15150 15174	2x15150 + 2x15174	2xBC/62/1 + 2xBC/63/1	**8103060003**	**810600J**	56	6x12x11.5-180°
M170*(SH 110 Bus,SH 170 Bus)*	76-	•	•	**1938509580**	**1938505380**	381	177.80x18x189.06	**587029J**	19384 19385	6x19384 + 2x19385	6xCW/4/1 + 2xCW/4/2				
M200, M230, M260 *(L170 Bus,SH110 Bus,TR120 Bus)*	77-	•	•	**1938509580**	**1938505380**	381	177.80x18x189.06	**587029J**	19384 19385	6x19384 + 2x19385	6xCW/4/1 + 2xCW/4/2				
R106*(: Rockwell Bus)*	04/80-	•	•	**1938509580**	**1938505380**	381	177.80x18x189.06	**587029J**	19384 19385	6x19384 + 2x19385	6xCW/4/1 + 2xCW/4/2				
R106*(: Perrot Bus)*	04/80-	•	•		**1982305380** **1982303320**	410	200x18.0/12.0x207 200x18.9x207.87		19823 19786	2x19823 + 6x19786	2xPB/34/2 + 6xPB/34/1	**8103100002**	**811000J**	112	10x18x18-180°
R1191*(Bus)*	78-	•	•		**1982305380** **1982303320**	410	200x18.0/12.0x207 200x18.9x207.87		19823 19786	2x19823 + 6x19786	2xPB/34/2 + 6xPB/34/1	**8103100002**	**811000J**	112	10x18x18-180°
R81*(Bus)*	81-85	•			**2968805440**	315	109.6x25x99	**567119J**		29688	8x29688				
	81-85	•			**2978205440**	315	109.6x27.5x99	**567119J**		29782	8x29782				
	81-85		•		**1788205380**	325	140x15.1/12.4x301			17882	4x17882	**8103060007**	**810600J**	64	6x15x11.5-180°
VOV 170SHII, VOV SH110*(Bus)*	75-	•	•	**1938509580**	**1938505380**	381	177.80x18x189.06	**587029J**	19384 19385	6x19384 + 2x19385	6xCW/4/1 + 2xCW/4/2				

© JURID / All rights reserved 2005

© JURID / All rights reserved 2005

| | | |

			STOCK	STOCK	⌀ mm				WVA	BFMC	JURID	SUPASET	#	
Iveco (OM)...														
...														
OM180 **OM260** *(6x4)* **OM300** *(P,PU,T)*		•	**1549409530**	420	90x11.8x397		15494	4x15494	4xFI/84/1	**8103080003**	**810800J**	64		8x15x15.5-180°
OM300 *(P,PU,T)*	75-	•	**1748203320**	420	125x11.8x397		17482	4x17482	4xFI/94/1	**8103080007**	**810800J**	96		8x20x15.5-180°
OM110Ai	73-	• •	**1758903320**	420	125x12.5x241		17589	4x17589		**8103060007**	**810600J**	48		6x15x11.5-180°
Iveco (Unic)														
P13, P170, P220, T340 **T220** *(A)* **P12** *(A200,P200,P220,P270,T270)* **P270** *(A)* **P160** *(A2)* **T270** *(RA)* **P200** *(A/A2)* **T200** *(AGR)*		•	**1752603320**	432	125x12.0x423		17526	4x17526	4xUM/26/-			92		
P13, P170, P220, T340 **T220** *(A)* **P270** *(A)* **P12** *(A200)* **P200** *(A,A2)* **P160** *(A2)* **T270** *(RA)* **T200** *(AGR)*		•	**1934503270**	412	190x12.0x405		19345	4x19345	4xUM/24/-			128		
P6 *(A)*		• •	**1749705380**	356	100x10.0x302 100x10.0x349		17497 17498	2x17497 + 2x17498	2xBT/52/1 + 2xBT/53/1	**8102050009**	**810500J**	60		5x13x9.5-180°
Kaiser														
RO26 *(SB150.2)*		•	**1936504042** **1936509582** **1936509552**	419	203x18.2/11.5x194 203x18.6/15.7x188		19365 19366	4x19365 + 4x19366	4xRW/2/5 + 4xRW/1/5	**8158057001**	**810635J**	128		6.35x15.88x11.9-150°(L10/10-10)
SSB25, SSB30 *(⟷ : SAE Dupillier (S3018))*		•	**1944403290**	305	180x11.5x265		19444	4x19444		**8103060007**	**810600J**	64		6x15x11.5-180°
SSB35 *(⟷ : SAE Dupillier (S3120),* *⟷ : SAE Dupillier (S3220))*		•	**1940503290**	305	200x12.0x141		19405	8x19405		**8103080003**	**810800J**	80		8x15x15.5-180°
SSB45C, SSB45 *(⟷ : SAE Dupillier (S3112))*		•	**1759203290**	305	125x12.5x142.33		17592	8x17592		**8103060007**	**810600J**	48		6x15x11.5-180°

JURID by Honeywell

© JURID / All rights reserved 2005

© JURID / All rights reserved 2005

JURID by Honeywell

K

			STOCK	STOCK	⌀ mm				WVA	BFMC	JURID	SUPASET	#	
Kaiser…														
…														
Sebmo *(SB150.2)*		•		**1940603290**	414	200x17.2/19.0/15.8x252 200x15.8/19.0/11.9x345		19406 19407	2x19406 + 2x19407	2xLF/102/1 + 2xLF/103/1	**8103060008**		82	6x16x12-180°
⊢⊣ : **BPW**		•	**1903209580**	**1903204040** **1903201250**	420	180x17.5/10.5x204		19032	8x19032	8xBC/98/1	**8162080001**	**810800J**	80	8x15x15.5-180°
		•	**1909409580**	**1909404040** **1909401250**	420	200x17.5/10.5x204		19094	8x19094	8xBC/97/1	**8162080001**	**810800J**	80	8x15x15.5-180°
⊢⊣ : **SAE Dupillier**		•	**1976209550**	**1976203290** **1976201250**	305	200x16.3/14.6x143 200x15.2/8.7x143		19762 19763	4x19762 + 4x19763	4xLZ/2/1 + 4xLZ/3/1	**8103080005**	**810800J**	64	8x18x15.5-180°
		•		**1761203320**	305	125x10.0x275		17612	4x17612		**8102060004**		48	6x13.5x11-180°
		•		**1935903290**	414	150x19.0/9.1x202 151x19.0/14.8x200		19359 19360	4x19359 + 4x19360		**8102060009**		64	6x18x12-180°
		•		**1936703290**	414	211x17.7/9.6x202 211x18.6/15.2x220		19367 19368	4x19367 + 4x19368		**8102060009**		96	6x18x12-180°
		•		**1940103290**	305	150x12.0x141		19401	8x19401	8xSJ/36/1	**8103060007**	**810600J**	64	6x15x11.5-180°
		•		**1976003290**	305	150x16.3/14.6x143 150x15.2/8.7x143		19760 19761	4x19760 + 4x19761	4xSA/36/1 + 4xSA/37/1	**8103080005**	**810800J**	48	8x18x15.5-180°
⊢⊣ : **SAF Sauer** *(SKRS)*		•		**1947703290**	419	203x18.4/15.3x189 203x18.8/11.9x195		19477 19478	4x19477 + 4x19478	4xSJ/30/1 + 4xSJ/31/1	**8103080005**	**810800J**	64	8x18x15.5-180°
⊢⊣ : **SAF Sauer,** ⊢⊣ : **SAF Sauer** *(SKRS9042)*		•		**1928304040**	420	180x19.6/16.4x189 180x19.0/12.0x194		19283 19284	4x19283 + 4x19284	4xSJ/28/1 + 4xSJ/29/1	**8103080005**	**810800J**	64	8x18x15.5-180°
⊢⊣ : **SAF Sauer**		•		**1951504040**	300	200x16.0/8.2x129 200x16.0/12.7x132		19515 19516	4x19515 + 4x19516	4xSJ/23/1 + 4xSJ/22/1	**8162080001**	**810800J**	64	8x15x15.5-180°
⊢⊣ : **Trailor**		•	**1955709580** **1955709550**	**1955704040** **1955701230** **1955701230**	419	203x19.4/10.9x195 203x19.5/15.6x189		19557 19606	4x19557 + 4x19606	4xFT/7/1 + 4xFT/6/1	**8103050015**	**810500J**	128	5x16x12-150°

Kälble														
6MKipper, K17E		•		**1728505050**	440	140x10.0x191		17285	8x17285	8xBC/2/1	**8103080007**	**810800J**	64	8x20x15.5-180°
			•	**1919405050**	480	160x16.0x216		19194	8x19194					
KDV32E8T, KV24E8T	62-	•		**1728505050**	440	140x10.0x191		17285	8x17285	8xBC/2/1	**8103080007**	**810800J**	64	8x20x15.5-180°
Schwimmwagen	68-69	•	•	**1919405050**	480	160x16.0x216		19194	8x19194					
Karosa														
Renault chassis	95-	•		**2903005390** **2903009560**	432	250x28x118	**587003J**	29030	4x29030					
⊂⊃ : **Knorr** *(SB 7000)*	97-	•		**2910815390**	430	248x30x109		29108	4x29108					
		•		**1989603270** **1989609530**	420	178x18.5x197		19896	8x19896	8xAX/14/6	**8158056001**	**810635J**	112	6.35x14.29x11.9-150°(L9/10-9)

© JURID / All rights reserved 2005

© JURID / All rights reserved 2005

Karrier

BantamFB3	72-77	•		**1578909530**		330	76.2x9.0x302			15789	4x15789	4xGG/171/1	**8158056001**	**810635J**	48	6.35x14.29x11.9-150°(L9/10-9)
Gamecock*(4t,5t)*	67-76	•		**1755503320**		330	101.6x9.5x317			17555	4x17555	4xGG/144/1	**8103060003**	**810600J**	48	6x12x11.5-180°

Kässbohrer / Setra

D17/L3, DHK17, DKB17, VC12L			•		**1916604040**		400	200x19.5/14.5x204 200x19.4/7.3x204			19166 19167	4x19166 + 4x19167	4xBC/90/1 + 4xBC/91/1	**8103080007**	**810800J**	80	8x20x15.5-180°
S110	71-89	•	•	**2901505440**		392	258x20x112	**567111J**			29015	4x29015					
	71-89	•	•		**2900805440**	392	258x18x112	**567111J**			29008	4x29008					
S110, S120, S140, S150*(E,ES,V)*	68-69	•			**1724805380**	400	140x12.1x321				17248	4x17248	4xBC/32/2	**8103080003**	**810800J**	48	8x15x15.5-180°
	69-78	•			**1774205380**	410	140x15.8/8.8x211 140x15.9/13.5x211				17742 17743	4x17742 + 4x17743	4xPB/9/1 + 4xPB/10/1	**8103100002**	**811000J**	64	10x18x18-180°
	68-69		•		**1901905380**	420	180x14.1x386				19019	4x19019	4xBC/61/1	**8146100005**		56	10x18x17.5-180°(BR)
	69-78		•		**1907605380** **1907605450**	410	180x16.1/13.8x211 180x16.0/9.0x211				19076 19559	4x19076 + 4x19559	4xPB/11/2 + 4xPB/12/1	**8103100002**	**811000J**	64	10x18x18-180°
S120, S140, S150*(E,ES,V)*	78-89	•			**1963405450** **1963405380**	410	160x15.8/8.7x211 160x15.9/13.6x211				19634 19365	4x19634 + 4x19365	4xPB/27/1 + 4xPB/28/1	**8103100002**	**811000J**	64	10x18x18-180°
	78-89		•		**1900405380** **1900405450**	410	220x16.1/14.1x211 220x19.9/11.3x211 220x16.8x210.8				19004 19743 19755	2x19004 + 2x19743 + 4x19755	2xPB/32/2 + 2xPB/32/1 + 4xPB/31/1	**8103100002**	**811000J**	96	10x18x18-180°
S120, S150	71-89	•		**2901505440**		392	258x20x112	**567111J**			29015	4x29015					
	71-89	•			**2900805440**	392	258x18x112	**567111J**			29008	4x29008					
	71-89		•		**1901905380**	420	180x14.1x386				19019	4x19019	4xBC/61/1	**8146100005**		56	10x18x17.5-180°(BR)
S130*(ES)*	82-83	•			**1774205380**	410	140x15.8/8.8x211 140x15.9/13.5x211				17742 17743	4x17742 + 4x17743	4xPB/9/1 + 4xPB/10/1	**8103100002**	**811000J**	64	10x18x18-180°
	82-86	•			**1724805380**	400	140x12.1x321				17248	4x17248	4xBC/32/2	**8103080003**	**810800J**	48	8x15x15.5-180°
	82-83		•		**1900405380** **1900405450**	410	220x16.1/14.1x211 220x19.9/11.3x211 220x16.8x210.8				19004 19743 19755	2x19004 + 2x19743 + 4x19755	2xPB/32/2 + 2xPB/32/1 + 4xPB/31/1	**8103100002**	**811000J**	96	10x18x18-180°
	82-86		•		**1901905380**	420	180x14.1x386				19019	4x19019	4xBC/61/1	**8146100005**		56	10x18x17.5-180°(BR)
	83-86		•		**1969905380**	410	220x17.5/15.7x196 220x17.4/6.3x196 220x18.45x196				19699 19847 19848	2x19699 + 2x19847 + 4x19848	2xPB/18/2 + 2xPB/18/1 + 4xPB/19/1	**8103100002**	**811000J**	96	10x18x18-180°
S140	83-86	•			**2949805440** **2949809560**	396	179.5x20x113	**567112J**			29498	8x29498					
S210*(HD,HDV)* **S130***(ES)*	83-86	•			**2958205440** **2958209560**	396	179.5x22x113	**567112J**			29582	8x29582					
S180	75-89	•		**2901505440**		392	258x20x112	**567111J**			29015	4x29015					
S130*(S)*	75-89	•			**1724805380**	400	140x12.1x321				17248	4x17248	4xBC/32/2	**8103080003**	**810800J**	48	8x15x15.5-180°
	75-89	•			**2900805440**	392	258x18x112	**567111J**			29008	4x29008					
	75-89		•		**1907605380** **1907605450**	410	180x16.1/13.8x211 180x16.0/9.0x211				19076 19559	4x19076 + 4x19559	4xPB/11/2 + 4xPB/12/1	**8103100002**	**811000J**	64	10x18x18-180°

© JURID / All rights reserved 2005

© JURID / All rights reserved 2005

Kässbohrer / Setra…

…

S140 **S211, S212, S213, S214, S215** *(U,UL)* **S210***(HD,HDV)*	83-88	•		**1907405380**		410	160x17.5/15.7x196 160x17.4/6.3x196				19074 19850	4x19074 + 4x19850	4xPB/17/2 + 4xPB/16/1	**8103100002**	**811000J**	64	10x18x18-180°
S140 **S215***(HDS,HDSI,U,UL)* **S211, S212, S213, S214***(U,UL)* **S228***(DT)* **S210***(HD,HDV)* **S216***(HDS,HDSI)*	89-	•		**2974705440** **2974709560**		406	139x32x121	**567113J**			29747	8x29747					
	89-	•		**2996905440**		406	139x34.5x121	**567113J**			29969	8x29969					
S140 **S215, S216***(HDS,HDSI)*	83-		•	**1969905380**		410	220x17.5/15.7x196 220x17.4/6.3x196 220x18.45x196				19699 19847 19848	2x19699 + 2x19847 + 4x19848	2xPB/18/2 + 2xPB/18/1 + 4xPB/19/1	**8103100002**	**811000J**	96	10x18x18-180°
S180	75-89		•	**1774205380**		410	140x15.8/8.8x211 140x15.9/13.5x211				17742 17743	4x17742 + 4x17743	4xPB/9/1 + 4xPB/10/1	**8103100002**	**811000J**	64	10x18x18-180°
S200	74-89	•		**2901505440**		392	258x20x112	**567111J**			29015	4x29015					
	74-89	•		**2900805440**		392	258x18x112	**567111J**			29008	4x29008					
	74-89		•	**1774205380**		410	140x15.8/8.8x211 140x15.9/13.5x211				17742 17743	4x17742 + 4x17743	4xPB/9/1 + 4xPB/10/1	**8103100002**	**811000J**	64	10x18x18-180°
	74-89		•	**1907605380** **1907605450**		410	180x16.1/13.8x211 180x16.0/9.0x211				19076 19559	4x19076 + 4x19559	4xPB/11/2 + 4xPB/12/1	**8103100002**	**811000J**	64	10x18x18-180°
S208*(HM,HMU)*	79-89	•		**1775805380** **1775803270**		332	120x8.1x255				17758	4x17758	4xMF/24/1	**8103060007**	**810600J**	48	6x15x11.5-180°
	79-89	•		**2968805440**		315	109.6x25x99	**567109J**			29688	8x29688					
	79-89	•		**2978205440**		315	109.6x27.5x99	**567109J**			29782	8x29782					
	79-89		•	**1788205380**		325	140x15.1/12.4x301				17882	4x17882		**8103060007**	**810600J**	64	6x15x11.5-180°
S209	77-	•	•	**2951009560**			388x29x140.5				29510	4x29510					
S210*(HD,HDV)*	83-86	•		**2949805440** **2949809560**		430	179.5x20x113	**567108J**			29498	8x29498					
	83-86	•		**2958205440** **2958209560**		430	179.5x22x113	**567108J**			29582	8x29582					
	83-		•	**1908405380** **1908405450**		410	180x17.5/15.7x196 180x17.4/6.3x196				19084 19856	4x19084 + 4x19856	4xPB/29/2 + 4xPB/30/1	**8103100002**	**811000J**	64	10x18x18-180°
S211*(H,HD)*	76-78	•		**2958205440** **2958209560**		392	179.5x22x113	**567111J**			29582	8x29582					
	78-83	•		**1774205380**		410	140x15.8/8.8x211 140x15.9/13.5x211				17742 17743	4x17742 + 4x17743	4xPB/9/1 + 4xPB/10/1	**8103100002**	**811000J**	64	10x18x18-180°
	78-83		•	**1907605380** **1907605450**		410	180x16.1/13.8x211 180x16.0/9.0x211				19076 19559	4x19076 + 4x19559	4xPB/11/2 + 4xPB/12/1	**8103100002**	**811000J**	64	10x18x18-180°
S211, S212, S213, S214, S215 *(U,UL)*	83-88	•		**2949805440** **2949809560**		396	179.5x20x113	**567112J**			29498	8x29498					
	83-88	•		**2958205440** **2958209560**		396	179.5x22x113	**567112J**			29582	8x29582					
	83-		•	**1969905450**		410	220x17.5/15.7x196 220x17.4/6.3x196 220x18.45x196				19699 19847 19848	2x19699 + 2x19847 + 4x19848	2xPB/18/2 + 2xPB/18/1 + 4xPB/19/1	**8103100002**	**811000J**	96	10x18x18-180°

© JURID / All rights reserved 2005

© JURID / All rights reserved 2005

Kässbohrer / Setra…

…

…

S211, S212, S213, S215*(H,HD)*	76-78	•		**2901505440**		392	258x20x112	**567111J**		29015	4x29015					
	76-78	•		**1734005380**		400	140x10.1x331			17340	4x17340	4xBC/77/1	**8103080003**	**810800J**	48	8x15x15.5-180°
	76-78	•		**1774205380**		410	140x15.8/8.8x211 140x15.9/13.5x211			17742 17743	4x17742 + 4x17743	4xPB/9/1 + 4xPB/10/1	**8103100002**	**811000J**	64	10x18x18-180°
	76-78	•		**2900805440**		392	258x18x112	**567111J**		29008	4x29008					
	78-83	•		**1734005380**		400	140x10.1x331			17340	4x17340	4xBC/77/1	**8103080003**	**810800J**	48	8x15x15.5-180°
	78-83	•		**2949805440** **2949809560**		396	179.5x20x113	**567112J**		29498	8x29498					
	78-83	•		**2958205440** **2958209560**		396	179.5x22x113	**567112J**		29582	8x29582					
	76-78		•	**1901905380**		420	180x14.1x386			19019	4x19019	4xBC/61/1	**8146100005**		56	10x18x17.5-180°(BR)
	76-78		•	**1907605380** **1907605450**		410	180x16.1/13.8x211 180x16.0/9.0x211			19076 19559	4x19076 + 4x19559	4xPB/11/2 + 4xPB/12/1	**8103100002**	**811000J**	64	10x18x18-180°
	78-83		•	**1901905380**		420	180x14.1x386			19019	4x19019	4xBC/61/1	**8146100005**		56	10x18x17.5-180°(BR)
S212, S213, S215*(H,HD)*	78-83	•		**1963405450** **1963405380**		410	160x15.8/8.7x211 160x15.9/13.6x211			19634 19365	4x19634 + 4x19365	4xPB/27/1 + 4xPB/28/1	**8103100002**	**811000J**	64	10x18x18-180°
	78-79		•	**1907605380** **1907605450**		410	180x16.1/13.8x211 180x16.0/9.0x211			19076 19559	4x19076 + 4x19559	4xPB/11/2 + 4xPB/12/1	**8103100002**	**811000J**	64	10x18x18-180°
	79-83		•	**1900405380** **1900405450**		410	220x16.1/14.1x211 220x19.9/11.3x211 220x16.8x210.8			19004 19743 19755	2x19004 + 2x19743 + 4x19755	2xPB/32/2 + 2xPB/32/1 + 4xPB/31/1	**8103100002**	**811000J**	96	10x18x18-180°
S215, S216*(HDS,HDSI)*	80-88	•		**2949805440** **2949809560**		396	179.5x20x113	**567112J**		29498	8x29498					
	80-88	•		**2958205440** **2958209560**		396	179.5x22x113	**567112J**		29582	8x29582					
	80-83		•	**1900405380** **1900405450**		410	220x16.1/14.1x211 220x19.9/11.3x211 220x16.8x210.8			19004 19743 19755	2x19004 + 2x19743 + 4x19755	2xPB/32/2 + 2xPB/32/1 + 4xPB/31/1	**8103100002**	**811000J**	96	10x18x18-180°
	80-83		•	**1963405450** **1963405380**		410	160x15.8/8.7x211 160x15.9/13.6x211			19634 19365	4x19634 + 4x19365	4xPB/27/1 + 4xPB/28/1	**8103100002**	**811000J**	64	10x18x18-180°
S215, S216 *(HDS Ch.# 13900001020046, HDSI Ch.# 13900001020046)*	83-		•	**1774205380**		410	140x15.8/8.8x211 140x15.9/13.5x211			17742 17743	4x17742 + 4x17743	4xPB/9/1 + 4xPB/10/1	**8103100002**	**811000J**	64	10x18x18-180°
S216*(HDS,HDSI)* **S215** *(HDS Ch.# 13900001020045, HDSI Ch.# 13900001020045)*	83-		•	**1907405380**		410	160x17.5/15.7x196 160x17.4/6.3x196			19074 19850	4x19074 + 4x19850	4xPB/17/2 + 4xPB/16/1	**8103100002**	**811000J**	64	10x18x18-180°
S228	77-88	•		**2949805440** **2949809560**		430	179.5x20x113	**567108J**		29498	8x29498					
	77-88	•		**2958205440** **2958209560**		430	179.5x22x113	**567108J**		29582	8x29582					
S228*(DT)*	84-88	•		**2949805440** **2949809560**		396	179.5x20x113	**567112J**		29498	8x29498					
	84-88	•		**2958205440** **2958209560**		396	179.5x22x113	**567112J**		29582	8x29582					
	84-89		•	**1774205380**		410	140x15.8/8.8x211 140x15.9/13.5x211			17742 17743	4x17742 + 4x17743	4xPB/9/1 + 4xPB/10/1	**8103100002**	**811000J**	64	10x18x18-180°
	84-		•	**1969905380**		410	220x17.5/15.7x196 220x17.4/6.3x196 220x18.45x196			19699 19847 19848	2x19699 + 2x19847 + 4x19848	2xPB/18/2 + 2xPB/18/1 + 4xPB/19/1	**8103100002**	**811000J**	96	10x18x18-180°
	89-		•	**1907405450**		410	160x17.5/15.7x196 160x17.4/6.3x196			19074 19850	4x19074 + 4x19850	4xPB/17/2 + 4xPB/16/1	**8103100002**	**811000J**	64	10x18x18-180°

JURID by Honeywell
© JURID / All rights reserved 2005

© JURID / All rights reserved 2005

Kässbohrer / Setra...

...

S300*(N)*	89-	•		**1907405380**		410	160x17.5/15.7x196 160x17.4/6.3x196				19074 19850	4x19074 + 4x19850	4xPB/17/2 + 4xPB/16/1	**8103100002**	**811000J**	64	10x18x18-180°
	89-		•	**1969905380**		410	220x17.5/15.7x196 220x17.4/6.3x196 220x18.45x196				19699 19847 19848	2x19699 + 2x19847 + 4x19848	2xPB/18/2 + 2xPB/18/1 + 4xPB/19/1	**8103100002**	**811000J**	96	10x18x18-180°
S300*(NC City)*	91-		•	**1900435380** **1900435450**		410	220x19.0/17.0x211 220x19.9/11.3x211 220x16.8x210.8				19004 19743 19755	2x19004 + 2x19743 + 19755	2xPB/32/2 + 2xPB/32/1 + 4xPB/31/1	**8103100002**	**811000J**	96	10x18x18-180°
S309, S312, S315*(HD,HDH)* **S300***(NC City)*	91-	•		**2903005390** **2903009560**		432	250x28x118	**567110J**		**587003J**	29030	4x29030					
	91-	•		**2905305390**		432	250x30x118	**567110J**		**587003J**	29053	4x29053					
S309, S312, S315*(HD,HDH)*	91-		•	**1969905380**		410	220x17.5/15.7x196 220x17.4/6.3x196 220x18.45x196				19699 19847 19848	2x19699 + 2x19847 + 4x19848	2xPB/18/2 + 2xPB/18/1 + 4xPB/19/1	**8103100002**	**811000J**	96	10x18x18-180°
S328*(DT)*	94-	•		**2910815390**		430	248x30x109	**567801J**			29108	4x29108					
	94-		•	**1774205380**		410	140x15.8/8.8x211 140x15.9/13.5x211				17742 17743	4x17742 + 4x17743	4xPB/9/1 + 4xPB/10/1	**8103100002**	**811000J**	64	10x18x18-180°
	94-		•	**1900405380** **1900405450**		410	220x16.1/14.1x211 220x19.9/11.3x211 220x16.8x210.8				19004 19743 19755	2x19004 + 2x19743 + 4x19755	2xPB/32/2 + 2xPB/32/1 + 4xPB/31/1	**8103100002**	**811000J**	96	10x18x18-180°
S415*(HD,HDH)* **S431***(DT)* **S411***(HD)* **S416, S417***(HDH)*	01-	•	•		**2910815390**		248x30x109				29108	4x29108					
SG180	73-83	•	•		**1774205380**	410	140x15.8/8.8x211 140x15.9/13.5x211				17742 17743	4x17742 + 4x17743	4xPB/9/1 + 4xPB/10/1	**8103100002**	**811000J**	64	10x18x18-180°
	73-83	•		**2901505440**		392	258x20x112	**567111J**			29015	4x29015					
	73-83	•			**1724805380**	400	140x12.1x321				17248	4x17248	4xBC/32/2	**8103080003**	**810800J**	48	8x15x15.5-180°
	73-83	•			**2900805440**	392	258x18x112	**567111J**			29008	4x29008					
	73-83		•		**1901905380**	420	180x14.1x386				19019	4x19019	4xBC/61/1	**8146100005**		56	10x18x17.5-180°(BR)
SG219, SG221*(SL,UL)*	84-	•			**1907405450**	410	160x17.5/15.7x196 160x17.4/6.3x196				19074 19850	4x19074 + 4x19850	4xPB/17/2 + 4xPB/16/1	**8103100002**	**811000J**	64	10x18x18-180°
	84-87		•		**1900405380** **1900405450**	410	220x16.1/14.1x211 220x19.9/11.3x211 220x16.8x210.8				19004 19743 19755	2x19004 + 2x19743 + 4x19755	2xPB/32/2 + 2xPB/32/1 + 4xPB/31/1	**8103100002**	**811000J**	96	10x18x18-180°
	84-		•		**1969905450**	410	220x17.5/15.7x196 220x17.4/6.3x196 220x18.45x196				19699 19847 19848	2x19699 + 2x19847 + 4x19848	2xPB/18/2 + 2xPB/18/1 + 4xPB/19/1	**8103100002**	**811000J**	96	10x18x18-180°
	88-		•		**1900435380** **1900435450**	410	220x19.0/17.0x211 220x19.9/11.3x211 220x16.8x210.8				19004 19743 19755	2x19004 + 2x19743 + 19755	2xPB/32/2 + 2xPB/32/1 + 4xPB/31/1	**8103100002**	**811000J**	96	10x18x18-180°
⊢⊣ : BPW			•	**1903209580**	**1903204040**	420	180x17.5/10.5x204				19032	8x19032	8xBC/98/1	**8162080001**	**810800J**	80	8x15x15.5-180°
			•	**1909409580**	**1909404040**	420	200x17.5/10.5x204				19094	8x19094	8xBC/97/1	**8162080001**	**810800J**	80	8x15x15.5-180°
			•	**1957409550**	**1957404040**	300	200x18.0/11.0x145				19574	8x19574	8xBC/80/1	**8162080001**	**810800J**	64	8x15x15.5-180°
			•		**1737704040**	420	120x18.0/11.2x204				17377	8x17377	8xBC/78/1	**8162080001**	**810800J**	80	8x15x15.5-180°
			•		**1910304040**	300	200x10.0x141				19103	8x19103	8xBC/55/1	**8162080001**	**810800J**	64	8x15x15.5-180°

© JURID / All rights reserved 2005

© JURID / All rights reserved 2005

			⌀ mm			WVA	BFMC	JURID	SUPASET	#	
		→STOCK		STOCK→							

Kässbohrer / Setra…

…

…: SAF Sauer	•	1951504040	300	200x16.0/8.2x129 200x16.0/12.7x132		19515 19516	4x19515 + 4x19516	4xSJ/23/1 + 4xSJ/22/1	8162080001	810800J	64	8x15x15.5-180°
	•	1524705380	400	80x8.0x389		15247	4x15247	4xFD/86/1	8162080001	810800J	40	8x15x15.5-180°
	•	1916804040	400	150x19.4/7.3x204 150x19.5/14.5x204		19168 19169	4x19168 + 4x19169	4xBC/92/1 + 4xBC/93/1	8103080007	810800J	80	8x20x15.5-180°
Flat Bed	•	1956804040	300	220x18.0/11.5x139		19568	8x19568		8162080001	810800J	64	8x15x15.5-180°

King

	•	1946109550	394	209x16.6/4.4x196 209x16.6/13.5x196		19461 19462	4x19461 + 4x19462	4xYK/9/3 + 4xYK/8/3	8158044002	810476J	128	4.76x15.88x9.32-150°(8-10)

King Truck Equipment

41TF, 42TF, 4SWPT2, 4SWPT3, 4SWPT4, 61R12, 61R15, 61R18, 61R20, 61R25, 61R30, 61R35	67-	•	1933309550	394	177.8x16.6/4.4x196 177.8x16.6/13.5x196		19333 19334	4x19333 + 4x19334	4xYK/7/2 + 4xYK/6/2	8158057002	810635J	96	6.35x15.88x11.9-150°(L10/10-10)
SD25	70-	•	1946109550	394	209x16.6/4.4x196 209x16.6/13.5x196		19461 19462	4x19461 + 4x19462	4xYK/9/3 + 4xYK/8/3	8158044002	810476J	128	4.76x15.88x9.32-150°(8-10)

Knorr

(O) : Knorr *(SN6)* 19.5"	05/03-	• •			210.9x30x92.5		29165	4x29165					
(O) : Knorr *(SN7)* 22.5"	05/03-	• •			248x30x109		29167	4x29167					
(O) : Knorr *(SK7)* 22.5"	05/03-	• •			210.9x30x108.3		29171	4x29171					
(O) : Knorr *(SB 6000)* 19.5"		• •	2909305390		210.7x30x92.5		29093	4x29093					
(O) : Knorr *(SB 7000)* 22.5"		• •	2910815390		248x30x109		29108	4x29108					
(O) : Knorr *(SB 5000)* 17.5"		• •	2911509100		173.6x27x84		29115	4x29115					
(O) : Knorr *(NA7)* 22.5"		• •	2915805390		210.8x30x108		29158	4x29158					
(O) : Knorr *(2V20)*		• •	2949805440 2949809560		179.5x20x113		29498	8x29498					
		• •	2958205440 2958209560		179.5x22x113		29582	8x29582					
(O) : Knorr *(K65)*		• •	2968805440		109.6x25x99		29688	8x29688					

JURID by Honeywell

© JURID / All rights reserved 2005

© JURID / All rights reserved 2005

JURID by Honeywell

Knorr...

...

(O) : **Knorr** *(K85)*	•	•	**2974705440** **2974709560**		139x32x121		29747	8x29747						
(O) : **Knorr** *(K65)*	•	•	**2978205440**		109.6x27.5x99		29782	8x29782						
(O) : **Knorr** *(K85)*	•	•	**2996905440**		139x34.5x121		29969	8x29969						

Knott

115 *(K,K/1,K/11)*		•	**1128505351**	180	30x3.9x180		11285	4x11285	4xBW/6/1		**810300J**	28	3x8x5.5-180°
184 *(K/2,K/4,K/6)* **115, 135** *(K/8,K/9)*		•	**1011604210**	180			10116	4x10116					
135 *(K,K/1,K/16)*		•	**1110701160**	180	40x4.7x179		11107	4x11107			**810300J**	28	3x8x5.5-180°
184 *(K,K/1,K/8)*		•	**1320204210**	180	50x4.7x178		13202	4x13202		**8103040002**	**810400J**	32	4x8x7.5-180°
		•	**1324004210**	180	50x4.5x163		13240	4x13240		**8103040002**	**810400J**	32	4x8x7.5-180°
20 *(443)*		•	**1128905360**	200	40x5.0x178		11289	4x11289		**8103040002**	**810400J**	56	4x8x7.5-180°
220 *(K,K/1,K/19)*		•	**1321201160**	200	50x5.0x182		13212	4x13212		**8102040003**	**810400J**	40	4x10x7.5-180°
246 *(K,K1,K8)* **GA** *(2-2.5)*		•	**1128405360**	250	40x5.0x261		11284	4x11284	4xBW/1/1	**8102040003**	**810400J**	40	4x10x7.5-180°
249 *(K,K/1,K/2)*		•	**1320301030**	300	50x6.0x314		13203	4x13203		**8102040003**	**810400J**	32	4x10x7.5-180°
25 *(505,519)*		•	**1550505350**	250	70x5.0x262		15505	4x15505		**8102040003**	**810400J**	64	4x10x7.5-180°
32 **5** *(500)*		•	**1517405380**	325	80x7.2x338		15174	4x15174	4xBC/63/1	**8103060003**	**810600J**	64	6x12x11.5-180°
347 *(D,K/1,K/2)*		•	**1530605460**	400	80x8.0x418		15306	4x15306	4xSY/2/2	**8102050012**	**810500J**	64	5x15x11-180°
365/366		•	**1705005380**	400	100x8.2x311 100x8.2x418		17050 17051	2x17050 + 2x17051	2xMF/1/1 + 2xMF/2/1	**8103060003**	**810600J**	56	6x12x11.5-180°
45 *(502)*		•	**1920004040**	420	160x18.0/11.0x204		19200	8x19200	8xBC/35/1	**8162080001**	**810800J**	80	8x15x15.5-180°
GA *(1.5,2,2H)*		•	**1128205300**	200	30x4.0x230		11282	4x11282	4xTP/1/1	**8103040002**	**810400J**	14	4x8x7.5-180°
GA *(4,5,6)*		•	**1504404210**	350	60x6.0x339		15044	4x15044	4xFD/85/1	**8103060002**	**810600J**	40	6x10x11.5-180°
GA *(5,6,7,8)*		•	**1524705380**	400	80x8.0x389		15247	4x15247	4xFD/86/1	**8162080001**	**810800J**	40	8x15x15.5-180°
: BPW		•	**1903204040** **1903201250**	420	180x17.5/10.5x204		19032	8x19032	8xBC/98/1	**8162080001**	**810800J**	80	8x15x15.5-180°
		•	**1155603320**	230	40x5.0x224		11556	4x11556		**8103040002**	**810400J**	40	4x8x7.5-180°
		•	**1530404210**	270	60x6.1x242		15304	4x15304		**8102050003**	**810500J**	56	5x10x9.5-180°
		•	**1963405380**	410	160x15.8/8.7x211 160x15.9/13.6x211		19634 19365	4x19634 + 4x19365	4xPB/27/1 + 4xPB/28/1	**8103100002**	**811000J**	64	10x18x18-180°

© JURID / All rights reserved 2005

© JURID / All rights reserved 2005

		STOCK	STOCK	⌀ mm			WVA	BFMC	JURID	SUPASET	#	

Lag

⊢⊣ : BPW	•	1903209580	1903204040 1903201250	420	180x17.5/10.5x204		19032	8x19032	8xBC/98/1	8162080001	810800J	80	8x15x15.5-180°
	•		1910204040	300	150x10.3x142		19102	8x19102	8xBC/54/1	8162080001	810800J	64	8x15x15.5-180°
	•		1939605380	300	150x12.5/10.5x141		19396	8x19396		8162080001	810800J	64	8x15x15.5-180°
	•		1951504040	300	200x16.0/8.2x129 200x16.0/12.7x132		19515 19516	4x19515 + 4x19516	4xSJ/23/1 + 4xSJ/22/1	8162080001	810800J	64	8x15x15.5-180°
	•		1957304040	300	150x18.0/12.5x145		19573	8x19573	8xBC/79/1	8162080001	810800J	64	8x15x15.5-180°
⊢⊣ : BPW,⊢⊣ : SAF Sauer	•	1909409580	1909404040 1909401250	420	200x17.5/10.5x204		19094	8x19094	8xBC/97/1	8162080001	810800J	80	8x15x15.5-180°
⊢⊣ : ROR,⊢⊣ : York	•		1936904040	419	219x18.5/10.5x196 219x18.6/15.2x190		19369 19370	4x19369 + 4x19370	4xFU/4/2 + 4xFU/5/2	8158057001	810635J	96	6.35x15.88x11.9-150°(L10/10-10)

Lecinena

Pegaso	•	1987909580	1987901230	410	200x16.6/9.6x162 200x16.6/16.3x162		19879 19881	4x19879 + 4x19881	4xPD/3/1 + 4xPD/4/1	8103060007	810600J	96	6x15x11.5-180°
	•	1909409550	1909404040 1909401250	420	200x17.5/10.5x204		19094	8x19094	8xBC/97/1	8162080001	810800J	80	8x15x15.5-180°
⊢⊣ : ROR 15"	•	1960409550	1960403290 1960401230	311	190x15.3/10.8x126 190x16.1/13.1x158		19604 19605	4x19604 + 4x19605	4xRW/9/2 + 4xRW/13/2	8158057001	810635J	80	6.35x15.88x11.9-150°(L10/10-10)
⊢⊣ : ROR	•		1936904040	419	219x18.5/10.5x196 219x18.6/15.2x190		19369 19370	4x19369 + 4x19370	4xFU/4/2 + 4xFU/5/2	8158057001	810635J	96	6.35x15.88x11.9-150°(L10/10-10)
15"	•		1985809530	314	200x16.5/6.0x138 200x16.5/15.0x175		19858 19859	4x19858 + 4x19859		8103060007	810600J	72	6x15x11.5-180°
	•		1986203290 1986209550	311	203x18.5/17.0x140 203x18.0x143		19862 19863	4x19862 + 4x19863	4xFU/17/1 + 4xFU/18/1	8103050014	810500J	96	5x16x12-180°
ⓞ : Knorr *(SB 7000)* 22.5"	•		2910815390	430	248x30x109		29108	4x29108					

Lecitrailer

⊢⊣ : BPW	•	1909409550	1909404040 1909401250	420	200x17.5/10.5x204		19094	8x19094	8xBC/97/1	8162080001	810800J	80	8x15x15.5-180°
⊢⊣ : ROR 15"	•	1960409550	1960403290 1960401230	311	190x15.3/10.8x126 190x16.1/13.1x158		19604 19605	4x19604 + 4x19605	4xRW/9/2 + 4xRW/13/2	8158057001	810635J	80	6.35x15.88x11.9-150°(L10/10-10)
⊢⊣ : ROR	•		1936904040 1987901230	419	219x18.5/10.5x196 219x18.6/15.2x190		19369 19370	4x19369 + 4x19370	4xFU/4/2 + 4xFU/5/2	8158057001	810635J	96	6.35x15.88x11.9-150°(L10/10-10)
	•	1987909580	1987901230	410	200x16.6/9.6x162 200x16.6/16.3x162		19879 19881	4x19879 + 4x19881	4xPD/3/1 + 4xPD/4/1	8103060007	810600J	96	6x15x11.5-180°
	•	1987909580		410	200x16.6/9.6x162 200x16.6/16.3x162		19879 19881	4x19879 + 4x19881	4xPD/3/1 + 4xPD/4/1	8103060007	810600J	96	6x15x11.5-180°
	•	1909409550	1909404040 1987901230 1909401250	420	200x17.5/10.5x204		19094	8x19094	8xBC/97/1	8162080001	810800J	80	8x15x15.5-180°
15"	•		1985809530	314	200x16.5/6.0x138 200x16.5/15.0x175		19858 19859	4x19858 + 4x19859		8103060007	810600J	72	6x15x11.5-180°
	•		1986203290 1986209550	311	203x18.5/17.0x140 203x18.0x143		19862 19863	4x19862 + 4x19863	4xFU/17/1 + 4xFU/18/1	8103050014	810500J	96	5x16x12-180°

© JURID / All rights reserved 2005

© JURID / All rights reserved 2005

				→STOCK	STOCK→	Ø mm				WVA	BFMC	JURID	SUPASET	#	

Lecitrailer...

...															
(O) : Knorr(*SB 7000*) **22.5"**	•		**2910815390**		248x30x109				29108	4x29108					

Leveque

⊢⊣ : BPW	•	**1909409580**	**1909404040** **1909401250**	420	200x17.5/10.5x204				19094	8x19094	8xBC/97/1	**8162080001**	**810800J**	80	8x15x15.5-180°
	•		**1920004040**	420	160x18.0/11.0x204				19200	8x19200	8xBC/35/1	**8162080001**	**810800J**	80	8x15x15.5-180°
⊢⊣ : SAE Dupillier *(S3120)*, ⊢⊣ : SAE Dupillier *(S3132)*	•		**1940503290**	305	200x12.0x141				19405	8x19405		**8103080003**	**810800J**	80	8x15x15.5-180°
⊢⊣ : SAE Dupillier *(S4215)*	•		**1935903290**	414	150x19.0/9.1x202 151x19.0/14.8x200				19359 19360	4x19359 + 4x19360		**8102060009**		64	6x18x12-180°
⊢⊣ : SAE Dupillier *(S4221)*	•		**1936703290**	414	211x17.7/9.6x202 211x18.6/15.2x220				19367 19368	4x19367 + 4x19368		**8102060009**		96	6x18x12-180°

Leyland / DAF

Convoy															
400 Series *(2.8t Piston 4 x 41 mm,* *3.5t Piston 4 x 41 mm)*	94-	•		**571250J**			105x17.8x75			20359	4x20359				
400 Series *(2.8t Piston 4 x 46 mm,* *3.5t Piston 4 x 46 mm,4.1t)*	94-	•		**571822J**		270	126.7x18x72.6			20904	4x20904				
Pilot															
200 Series*(2.0t,2.3t,2.5t,2.8t)*	94-	•		**571233J**			88.5x15x70.5			20364 20365	2x20364 + 2x20365				
200 Series*(Bus,Chassis Cab)*	94-	•		**571250J**			105x17.8x75			20359	4x20359				
200 Series *(2.0t,2.3t,2.5t,2.8t,Bus,Chassis Cab)*	94-		•	**361048J**		228	228x45								
Sherpa															
185D, 215, 220, 240, 250	74-85	•		**361047B**		254	254x57								
	74-85	•		**571233J**		276	88.5x15x70.5	**561350B**		20364 20365	2x20364 + 2x20365				
	74-85		•	**361048J**		228	228x45								
200, 230, 250, 255	85-94	•		**571233J**		276	88.5x15x70.5	**561350B**		20364 20365	2x20364 + 2x20365				
	85-94		•	**361048J**		228	228x45								
285, 300, 310, 350, 400 **280***(Bus,Combi)*	85-94	•		**571250J**		276	105x17.8x75	**561350B**		20359	4x20359				
280, 285, 310, 350 *(Combi Piston 4 x 41 mm)*	80-85	•		**571250J**		276	105x17.8x75	**561350B**		20359	4x20359				
280, 285, 310, 350*(Combi)*	80-85		•	**361048J**		228	228x45								
285, 300, 310, 350, 400 *(Piston 4 x 46 mm)*	85-94	•		**571822J**		275	126.7x18x72.6	**561504B**		20904	4x20904				

JURID by Honeywell
© JURID / All rights reserved 2005
© JURID / All rights reserved 2005
JURID by Honeywell

Leyland / DAF...

Blue line

Bear, Bison, Reiver, Super Buffalo, Super Elan **Buffalo 3BU51, Lynx 226TR, Lynx 2LX50** *(26t)* **Clydesdale, Lynx** *(16t)*	72-81	•		**1907203320** **1907209530**	394	152x12.7x362			19072	4x19072	4xGG/83/1	**8158056001**	**810635J**	48	6.35x14.29x11.9-150°(L9/10-9)
Buffalo 3BU51, Lynx 226TR, Lynx 2LX50 *(26t)*	72-81		•	**1937129530**	394	203x12.7x386			19371	4x19371	4xGG/142/1	**8158056001**	**810635J**	72	6.35x14.29x11.9-150°(L9/10-9)
ChieFTain	73-81	•		**1754609580**	394	127x12.7x360			17546	4x17546	4xGG/118/1	**8158056001**	**810635J**	48	6.35x14.29x11.9-150°(L9/10-9)
Marathon	73-	•		**1911109530**	394	177.8x12.7x358.4			19111	4x19111	4xGG/92/1	**8158056001**	**810635J**	72	6.35x14.29x11.9-150°(L9/10-9)

F95

			1901009530	**1901005700** **1901001230**	420	150x21.3/17.8x176 150x21.2/12.9x179			19010 19011	4x19010 + 4x19011	4xDF/45/1 + 4xDF/44/1	**8158058001**	**810635J**	64	6.35x17.5x11.9-150°(L11/10-11)
			1906309530	**1906305700** **1906301230**	420	200x21.1/12.9x179 200x21.3/17.8x176			19063 19064	4x19063 + 4x19064	4xDF/48/1 + 4xDF/49/1	**8158058001**	**810635J**	128	6.35x17.5x11.9-150°(L11/10-11)
				1701205700	419	127x21.3/15.4x218 127x21.3/10.6x211			17012 17013	2x17012 + 2x17013	2xDF/40/1 + 2xDF/41/1	**8158058001**	**810635J**	80	6.35x17.5x11.9-150°(L11/10-11)
				1902405700	419	152.4x21.2/10.6x211 152.4x21.3/15.4x218			19024 19031	4x19024 + 4x19031	4xDF/42/1 + 4xDF/43/1	**8158058001**	**810635J**	80	6.35x17.5x11.9-150°(L11/10-11)
				1905205700 **1905209530**	420	175x21.2/12.9x179 175x21.3/17.8x176			19052 19055	4x19052 + 4x19055	4xDF/46/1 + 4xDF/47/1	**8158058001**	**810635J**	96	6.35x17.5x11.9-150°(L11/10-11)
				1906905700 **1906903270**	420	240x20.8/14.2x179 200x21.3/17.8x176			19069 19077	4x19069 + 4x19077	4xDF/50/1 + 4xDF/51/1	**8158058001**	**810635J**	128	6.35x17.5x11.9-150°(L11/10-11)

FA45

120, 130 *(6.2t,7.7t)*	91-		•	**1581709580**	**1581703320**		325	96.5x12.0x312 96.5x12.0x258			15817 15823	2x15817 + 2x15823	2xMP/37/1 + 2xMP/38/1	**8103080007**	**810800J**	44	8x20x15.5-180°
150, 160 *(10t,11t,16t,18t)* **180, 210** *(10t,11t)* **120** *(6.2t,7.7t)* **130** *(10t,11t,6.2t,7.7t)*	91-	•			**2901709560**		315	191x23x87			29017	4x29017					
150, 160 *(16t,18t)*	91-		•	**1790009580**	**1790003270**		325	146.5x12.1x301 146.5x12.1x251			17900 17901	2x17900 + 2x17901	2xMP/39/1 + 2xMP/40/1	**8103080007**	**810800J**	44	8x20x15.5-180°

FA50

130, 150, 160	92-	•	•	**1950309580**	**1950303320**		360	170x16.0x315			19503	4x19503	4xCW/3/1	**8103080003**	**810800J**	72	8x15x15.5-180°
130, 160	90-92		•		**1793209530**		330	126x11.4/10.0x365 127x8.5/6.7x311			17932 17933	2x17932 + 2x17933	2xGG/187/1 + 2xGG/186/1	**8103040002**	**810400J**	56	4x8x7.5-180°

FA55

210 *(10t,11t,13t,18t)* **230** *(13t,18t)* **150, 160, 180** *(10t,11t)*	95-	•			**2907705390** **2907709561**		375	204x27x106	**567812J**		29077	4x29077					

FA80

D80, T80, TG80	91-	•	•	**1954209580**			381	200x19.2/11.9x183			19542	8x19542	8xRW/25/1	**8158056001**	**810635J**	96	6.35x14.29x11.9-150°(L9/10-9)
T80.300, T80.330, TG80.330 *(4x2,6x2)*	90-91	•	•		**1992103270**		394	203x19.5/13.5x211			19921	8x19921	8xCW/12/1	**8158055001**	**810635J**	128	6.35x12.7x11.9-150°(L8/10-8)

© JURID / All rights reserved 2005

© JURID / All rights reserved 2005

Leyland / DAF...

Red Line																
Boxer BX1425, Boxer BX1450	69-82	•		**1962203320**	394	152x12.7x354			19622	4x19622	4xLH/82/2	**8102060004**		64	6x13.5x11-180°
Boxer BX1600	71-86	•		**1907203320** **1907209530**	394	152x12.7x362			19072	4x19072	4xGG/83/1	**8158056001**	**810635J**	48	6.35x14.29x11.9-150°(L9/10-9)
	71-86		•	**1911109530**	394	177.8x12.7x358.4			19111	4x19111	4xGG/92/1	**8158056001**	**810635J**	72	6.35x14.29x11.9-150°(L9/10-9)
Contractor *(6x4)*	67-78	•		**1974503270**	394	203x18.2/11.8x160			19745	8x19745	8xCS/64/1	**8158056001**	**810635J**	96	6.35x14.29x11.9-150°(L9/10-9)
	79-	•		**1974503270**	394	203x18.2/11.8x160			19745	8x19745	8xCS/64/1	**8158056001**	**810635J**	96	6.35x14.29x11.9-150°(L9/10-9)
	79-		•	**1936504042** **1936509582** **1936509552**	419	203x18.2/11.5x194 203x18.6/15.7x188			19365 19366	4x19365 + 4x19366	4xRW/2/5 + 4xRW/1/5	**8158057001**	**810635J**	128	6.35x15.88x11.9-150°(L10/10-10)
Mastiff ChieFTain	82-86	•		**1754609580**	394	127x12.7x360			17546	4x17546	4xGG/118/1	**8158056001**	**810635J**	48	6.35x14.29x11.9-150°(L9/10-9)
Mastiff MS1600, Mastiff MS2600, Mastiff MS2800	69-86	•		**1907203320** **1907209530**	394	152x12.7x362			19072	4x19072	4xGG/83/1	**8158056001**	**810635J**	48	6.35x14.29x11.9-150°(L9/10-9)
	69-86		•	**1911109530**	394	177.8x12.7x358.4			19111	4x19111	4xGG/92/1	**8158056001**	**810635J**	72	6.35x14.29x11.9-150°(L9/10-9)
Super Mastiff SM2200, Super Mastiff SM2400 *(6x4)*	72-86	•	•	**1911109530**	394	177.8x12.7x358.4			19111	4x19111	4xGG/92/1	**8158056001**	**810635J**	72	6.35x14.29x11.9-150°(L9/10-9)
Terrier TR650, Terrier TR738, Terrier TR850	70-84	•		**1755503320**	330	101.6x9.5x317			17555	4x17555	4xGG/144/1	**8103060003**	**810600J**	48	6x12x11.5-180°
Terrier TR950	72-84	•		**1794009530**	330	101x7.9x304			17940	4x17940	4xLH/94/1			64	4x10x8-150°(G6)
T 43																
Landmaster *(9.12)*	81-		•	**1731609530**	394	127x12.7x320			17316	4x17316	4xFD/121/1	**8158055001**	**810635J**	48	6.35x12.7x11.9-150°(L8/10-8)
Landtrain	80-	•	•	**1936504042** **1936509582** **1936509552**	419	203x18.2/11.5x194 203x18.6/15.7x188			19365 19366	4x19365 + 4x19366	4xRW/2/5 + 4xRW/1/5	**8158057001**	**810635J**	128	6.35x15.88x11.9-150°(L10/10-10)
T 45																
Constructor *(30.19 8x4,30.2 8x4, 30.21 8x4, 30.23 8x4, 30.24 8x4, 30.25 8x4)*	80-83	•		**1911109530**	394	177.8x12.7x358.4			19111	4x19111	4xGG/92/1	**8158056001**	**810635J**	72	6.35x14.29x11.9-150°(L9/10-9)
Constructor *(24.15 6x4,24.18 6x4,24.21 6x4)*	81-83	•		**1911109530**	394	177.8x12.7x358.4			19111	4x19111	4xGG/92/1	**8158056001**	**810635J**	72	6.35x14.29x11.9-150°(L9/10-9)
Cruiser *(16.18,16.21,16.23)*	81-91	•		**1911109530**	394	177.8x12.7x358.4			19111	4x19111	4xGG/92/1	**8158056001**	**810635J**	72	6.35x14.29x11.9-150°(L9/10-9)
Cruiser *(16.15)*	82-83	•		**1911109530**	394	177.8x12.7x358.4			19111	4x19111	4xGG/92/1	**8158056001**	**810635J**	72	6.35x14.29x11.9-150°(L9/10-9)
Cruiser *(16.18,16.21,16.23)*	81-91		•	**1937129530**	394	203x12.7x386			19371	4x19371	4xGG/142/1	**8158056001**	**810635J**	72	6.35x14.29x11.9-150°(L9/10-9)
Freighter *(15.11,15.14,16.14)*	82-90	•		**1907203320** **1907209530**	394	152x12.7x362			19072	4x19072	4xGG/83/1	**8158056001**	**810635J**	48	6.35x14.29x11.9-150°(L9/10-9)
Freighter *(13.11,13.13,13.14,13.16)*	82-90		•	**1731609530**	394	127x12.7x320			17316	4x17316	4xFD/121/1	**8158055001**	**810635J**	48	6.35x12.7x11.9-150°(L8/10-8)
Roadrunner *(10.12,6.1,6.12,8.1,8.12)*	84-85	•		**1794009530**	330	101x7.9x304			17940	4x17940	4xLH/94/1			64	4x10x8-150°(G6)
Roadrun-	86-91	•		**2901709560**	315	191x23x87	**567122J**		29017	4x29017					
Roadrunner *(10.12,10.13,10.15)*	86-91	•		**2901709560**	312	191x23x87	**567123J**		29017	4x29017					
	86-90		•	**1790009580** **1790003270**	325	146.5x12.1x301 146.5x12.1x251			17900 17901	2x17900 + 2x17901	2xMP/39/1 + 2xMP/40/1	**8103080007**	**810800J**	44	8x20x15.5-180°
Roadrun-	86-91		•	**1581709580** **1581703320**	325	96.5x12.0x312 96.5x12.0x258			15817 15823	2x15817 + 2x15823	2xMP/37/1 + 2xMP/38/1	**8103080007**	**810800J**	44	8x20x15.5-180°

© JURID / All rights reserved 2005

© JURID / All rights reserved 2005

				STOCK	STOCK	⌀ mm				WVA	BFMC	JURID	SUPASET	#	
Leyland / DAF...															
T 45...															
Roadtrain *(16.25 4x2 Tractor, 16.28 4x2 Tractor, 16.29 4x2 Tractor, 17.27 4x2 Tractor, 17.28 4x2 Tractor, 17.29 4x2 Tractor, 17.3 4x2 Tractor, 17.32 4x2 Tractor, 17.34 4x2 Tractor, 17.35 4x2 Tractor, 19.28 4x2 Tractor)*	80-89	•	•		**1992103270**	394	203x19.5/13.5x211			19921	8x19921	8xCW/12/1	**8158055001**	**810635J**	128	6.35x12.7x11.9-150°(L8/10-8)
CubBus, CubCoach	83-	•			**1755503320**	330	101.6x9.5x317			17555	4x17555	4xGG/144/1	**8103060003**	**810600J**	48	6x12x11.5-180°
SwiftBus	87-91	•			**2901709560**	315	191x23x87			29017	4x29017					
	91-	•			**2968805440**	315	109.6x25x99			29688	8x29688					
	91-	•			**2978205440**	315	109.6x27.5x99			29782	8x29782					
	87-		•	**1790009580**	**1790003270**	325	146.5x12.1x301 146.5x12.1x251			17900 17901	2x17900 + 2x17901	2xMP/39/1 + 2xMP/40/1	**8103080007**	**810800J**	44	8x20x15.5-180°
Lohr															
↦↤ : Colaert		•			**1724703320**	406	100x10.0x346 100x10.0x284			17247 17305	2x17247 + 2x17305	2xSA/8/1 + 2xSA/9/1	**8102050010**	**810500J**	52	5x13.5x11-180°(CT/BK)
		•			**1730703320**	406	125x10.0x346 125x10.0x284			17307 17308	2x17307 + 2x17308	2xBT/54/1 + 2xBT/55/1	**8102050009**	**810500J**	116	5x13x9.5-180°
		•			**1904904040**	414	150x12.5x347 285x12.5x285			19049 19199	2x19049 + 2x19199	2xSA/10/1 + 2xSA/11/1	**8102060005**		96	6x13.5x12-180°
		•			**1931503270**	414	175x13.0x347 175x13.0x253			19315 19319	2x19315 + 2x19319	2xSA/32/1 + 2xSA/33/1	**8102060004**		112	6x13.5x11-180°
		•			**1940503290**	305	200x12.0x141			19405	8x19405		**8103080003**	**810800J**	80	8x15x15.5-180°
		•			**1940603290**	414	200x17.2/19.0/15.8x252 200x15.8/19.0/11.9x345			19406 19407	2x19406 + 2x19407	2xLF/102/1 + 2xLF/103/1	**8103060008**		82	6x16x12-180°
		•			**1951103270**	414	150x17.2/19.0/15.8x252 150x15.8/19.0/11.9x345			19511 19512	2x19511 + 2x19512	2xLF/104/1 + 2xLF/105/1	**8103060008**		92	6x16x12-180°
↦↤ : Kassbohrer		•			**1916804040**	400	150x19.4/7.3x204 150x19.5/14.5x204			19168 19169	4x19168 + 4x19169	4xBC/92/1 + 4xBC/93/1	**8103080007**	**810800J**	80	8x20x15.5-180°
↦↤ : SAE Dupillier *(S3012)*		•			**1761203320**	305	125x10.0x275			17612	4x17612		**8102060004**		48	6x13.5x11-180°
↦↤ : SAE Dupillier *(S3018)*		•			**1944403290**	305	180x11.5x265			19444	4x19444		**8103060007**	**810600J**	64	6x15x11.5-180°
↦↤ : SAE Dupillier *(S3112)*, **↦↤ : SAE Dupillier** *(S3212)*		•			**1759203290**	305	125x12.5x142.33			17592	8x17592		**8103060007**	**810600J**	48	6x15x11.5-180°
↦↤ : SAE Dupillier *(S3312)*		•			**1789703290**	305	125x16.3/14.6x143 125x15.2/8.7x143			17897 17898	4x17897 + 4x17898		**8103080005**	**810800J**	48	8x18x15.5-180°
↦↤ : SAE Dupillier *(S3315)*		•			**1976003290**	305	150x16.3/14.6x143 150x15.2/8.7x143			19760 19761	4x19760 + 4x19761	4xSA/36/1 + 4xSA/37/1	**8103080005**	**810800J**	48	8x18x15.5-180°
↦↤ : SAE Dupillier *(S3320)*		•		**1976209550**	**1976203290** **1976201250**	305	200x16.3/14.6x143 200x15.2/8.7x143			19762 19763	4x19762 + 4x19763	4xLZ/2/1 + 4xLZ/3/1	**8103080005**	**810800J**	64	8x18x15.5-180°

JURID by Honeywell

© JURID / All rights reserved 2005

© JURID / All rights reserved 2005

JURID by Honeywell

L

		STOCK	STOCK	mm			WVA		BFMC	JURID	SUPASET	#	

Lohr...

...

	•	1909409580	1909404040 1909401250	420	200x17.5/10.5x204		19094	8x19094	8xBC/97/1	8162080001	810800J	80	8x15x15.5-180°
	•		1991203290	355	150x18.3/9.4x160 150x19.2/14.6x169		19912 19913	4x19912 + 4x19913	4xLZ/5/1 + 4xLZ/4/1	8162080002	810800J	80	8x18x15.5-180°

M & G Trailers

⊢⊣ : ROR	•	1903609552	1903604042 1903601232	419	178x18.6/16.7x188 178x18.2/11.5x194		19036 19037	4x19036 + 4x19037	4xIL/66/3 + 4xIL/67/3	8158057001	810635J	96	6.35x15.88x11.9-150°(L10/10-10)
⊢⊣ : ROR 15"	•	1960409550	1960403290 1960401230	311	190x15.3/10.8x126 190x16.1/13.1x158		19604 19605	4x19604 + 4x19605	4xRW/9/2 + 4xRW/13/2	8158057001	810635J	80	6.35x15.88x11.9-150°(L10/10-10)
⊢⊣ : ROR	•		1936904040	419	219x18.5/10.5x196 219x18.6/15.2x190		19369 19370	4x19369 + 4x19370	4xFU/4/2 + 4xFU/5/2	8158057001	810635J	96	6.35x15.88x11.9-150°(L10/10-10)

Mack

	•	1903609552	1903604042 1903601232	419	178x18.6/16.7x188 178x18.2/11.5x194		19036 19037	4x19036 + 4x19037	4xIL/66/3 + 4xIL/67/3	8158057001	810635J	96	6.35x15.88x11.9-150°(L10/10-10)
	•	1938509580	1938505380 1938501230	381	177.80x18x189.06	587029J	19384 19385	6x19384 + 2x19385	6xCW/4/1 + 2xCW/4/2				

Maduraud

W4 *(SR 10 (O) : Bendix, SR 6 (O) : Bendix, SR 8 (O) : Bendix, SRSD 10 (O) : Bendix, SRSD 6 (O) : Bendix, SRSD 8 (O) : Bendix)*	•		1724703320	406	100x10.0x346 100x10.0x284		17247 17305	2x17247 + 2x17305	2xSA/8/1 + 2xSA/9/1	8102050010	810500J	52	5x13.5x11-180°(CT/BK)
W5 *(SR 12 (O) : Bendix, SRSD 12 (O) : Bendix)*	•		1730703320	406	125x10.0x346 125x10.0x284		17307 17308	2x17307 + 2x17308	2xBT/54/1 + 2xBT/55/1	8102050009	810500J	116	5x13x9.5-180°
W5 *(SR 15 (O) : Bendix, SR 16 (O) : Bendix, SR 22 (O) : Bendix, SRSD 15 (O) : Bendix, SRSD 16 (O) : Bendix, SRSD 22 (O) : Bendix)*	•		1904904040	414	150x12.5x347 285x12.5x285		19049 19199	2x19049 + 2x19199	2xSA/10/1 + 2xSA/11/1	8102060005		96	6x13.5x12-180°
W5 *(SR 19,SR 20,SRSD 19,SRSD 20)*	•		1931503270	414	175x13.0x347 175x13.0x253		19315 19319	2x19315 + 2x19319	2xSA/32/1 + 2xSA/33/1	8102060004		112	6x13.5x11-180°

JURID by Honeywell
© JURID / All rights reserved 2005
© JURID / All rights reserved 2005
JURID by Honeywell

				STOCK	STOCK		mm				WVA	BFMC	JURID	SUPASET	#	

MAN

G

LT28, LT31, LT35, LT40, LT45	81-	•			**571255J**		281	89.8x18.5x73.5		20280	4x20280					

F & H

19.168, 19.2*(F,H,HA)*	73-79	•		**1949409580** **1949409530**	**1949405380** **1949401230** **1949401230**		410	163x17.0/11.8x178	**587017J** **587018J**	19494	8x19494	8xMP/31/2	**8162080001**	**810800J**	64	8x15x15.5-180°
	73-79		•	**1949409580** **1949409530**	**1949405380** **1949401230** **1949401230**		410	163x17.0/11.8x178	**587017J** **587018J**	19494	8x19494	8xMP/31/2	**8162080001**	**810800J**	64	8x15x15.5-180°
	73-79		•	**1949509580** **1949509530**	**1949505380** **1949501230** **1949501230**		410	183x17.0/11.8x178	**587017J** **587018J**	19495	8x19495	8xMP/32/2	**8162080002**	**810800J**	64	8x18x15.5-180°
19.186, 19.215, 19.23, 19.256 *(DF,DH,FN)*	73-79	•	•		**1741005380**		420	140x18.5/17.3x179 140x18.5/9.0x179		17410 17411	4x17410 + 4x17411	4xMP/34/1 + 4xMP/35/1	**8135100003**		56	10x18x18.5-140°(BQ/BW)
	73-79		•		**1947305380**		440	160x18.4/15.5x184 160x18.4/10.4x184		19473 19747	4x19473 + 4x19474	4xMP/25/1 + 4xMP/26/1	**8135100003**		60	10x18x18.5-140°(BQ/BW)
19.241, 19.24*(F,FA,H,U)* **19.321, 19.331, 19.361** *(F,FL,H,U,UL)* **26.256***(274)*, **26.256***(278)*, **26.256***(279)*, **32.24***(DF,DH,DHA)* **20.24***(FVL-KO,H)* **19.32***(F,FA,H,HA,U,UL)* **26.32***(DF,DFA,DFL,DH,DHA)* **26.192, 26.215, 26.232, 26.23, 30.192, 30.215, 30.232, 30.23, 30.256, 30.32** *(DH,DHA)* **30.24***(DF,DFA,DH,DHA,DHR)* **26.230***(149)*, **26.240***(277)*, **26.240***(533)(DHA)* **20.32***(FVLS)* **19.256***(H,HA)* **26.240***(275)*, **26.240***(276)(DF,DH)* **26.240***(535)(DFA)* **26.240***(532)*, **26.240***(534)*, **26.240***(551)(DF,DH)*	73-90		•	**1949509580** **1949509530**	**1949505380** **1949501230** **1949501230**		410	183x17.0/11.8x178	**587017J** **587018J**	19495	8x19495	8xMP/32/2	**8162080002**	**810800J**	64	8x18x15.5-180°

JURID by Honeywell
© JURID / All rights reserved 2005
© JURID / All rights reserved 2005
JURID by Honeywell

→STOCK STOCK→ ∅ mm WVA BFMC JURID SUPASET #

MAN...

...

F & H...

19.36 **26.240**(275), **26.240**(276)(DF,DH) **26.23, 30.192, 30.215, 30.232, 30.23, 30.256** (DH) **20.24**(FVL-KO,H) **26.240**(247), **26.240**(535)(DFA) **30.24**(DF,DFA,DH,DHA,DHR,VF) **26.192, 26.215, 26.232**(DH,DHA) **26.230**(149), **26.240**(277), **26.240**(533), **26.256**(279), **30.32**(DHA) **26.32**(DF,DFA,DFL,DH,DHA) **26.28, 32.24**(DF,DFA,DH,DHA) **19.256**(H,HA) **19.321, 19.331, 19.361** (F,FA,FL,H,HA,U,UL) **19.241, 19.24, 19.32**(F,FA,H,HA,U) **26.240**(532), **26.240**(534), **26.240**(551)(DF,DH,FVL-KO) **19.281, 19.28, 19.291**(F,FA,FL,H,HA)	73-90	•		**1949409580** **1949409530**	**1949405380** **1949401230** **1949401230**	410	163x17.0/11.8x178	**587017J** **587018J**	19494	8x19494	8xMP/31/2	**8162080001**	**810800J**	64	8x15x15.5-180°
19.36 **19.321, 19.331, 19.361** (F,FA,FL,H,HA,U,UL) **32.24**(DF,DH,DHA) **20.24**(FVL-KO) **26.240**(533)(DHA) **19.241, 19.24**(HA) **26.240**(535), **30.24**(DFA) **26.240**(532), **26.240**(534), **26.240**(551)(DF,DH,FVL-KO) **19.281, 19.291**(F,FA,FL,H,HA)	73-90		•	**1949609580** **1949609530**	**1949605380** **1949601230** **1949601230**	410	223x17.0/11.8x178	**587017J** **587018J**	19496	8x19496	8xMP/36/2	**8162080003**	**810800J**	64	8x20x15.5-180°
19.32(UL)	71-73	•			**1741005380**	420	140x18.5/17.3x179 140x18.5/9.0x179		17410 17411	4x17410 + 4x17411	4xMP/34/1 + 4xMP/35/1	**8135100003**		56	10x18x18.5-140°(BQ/BW)
20.281, 20.28, 20.321, 20.361, 22.321, 22.331 (FVLS)	78-90	•		**1949409580** **1949409530**	**1949405380** **1949401230** **1949401230**	410	163x17.0/11.8x178	**587017J** **587018J**	19494	8x19494	8xMP/31/2	**8162080001**	**810800J**	64	8x15x15.5-180°
	78-90		•	**1949509580** **1949509530**	**1949505380** **1949501230** **1949501230**	410	183x17.0/11.8x178	**587017J** **587018J**	19495	8x19495	8xMP/32/2	**8162080002**	**810800J**	64	8x18x15.5-180°
	78-90		•	**1949609580** **1949609530**	**1949605380** **1949601230** **1949601230**	410	223x17.0/11.8x178	**587017J** **587018J**	19496	8x19496	8xMP/36/2	**8162080003**	**810800J**	64	8x20x15.5-180°
20.32(FVLS)	73-90	•	•		**1741005380**	420	140x18.5/17.3x179 140x18.5/9.0x179		17410 17411	4x17410 + 4x17411	4xMP/34/1 + 4xMP/35/1	**8135100003**		56	10x18x18.5-140°(BQ/BW)

JURID by Honeywell © JURID / All rights reserved 2005
© JURID / All rights reserved 2005 JURID by Honeywell

				STOCK	STOCK	∅ mm				WVA	BFMC	JURID	SUPASET	#	
MAN...															
F & H...															
22.32 *(FNL,UNL)* **22.192** *(250)*, **22.192** *(436)*, **22.240** *(250)*, **22.240** *(436)(FNL)* **22.22, 22.231, 22.281, 22.321, 22.361** *(FNL,FVLS,UNL)* **22.28** *(FL,FNL,UNL)*	77-90	•	•	**1949409580** **1949409530**	**1949405380** **1949401230** **1949401230**	410	163x17.0/11.8x178	**587017J** **587018J**	19494	8x19494	8xMP/31/2	**8162080001**	**810800J**	64	8x15x15.5-180°
22.24 *(H)* **22.28** *(FL,FNL,FVLS,S,UNL)* **22.192** *(250)*, **22.192** *(436)*, **22.240** *(250)*, **22.240** *(436)(FNL)* **22.22, 22.231, 22.281, 22.361** *(FNL,FVLS,UNL)* **22.321, 22.32** *(FNL,FVLS,S,UNL)*	77-90		•	**1949509580** **1949509530**	**1949505380** **1949501230** **1949501230**	410	183x17.0/11.8x178	**587017J** **587018J**	19495	8x19495	8xMP/32/2	**8162080002**	**810800J**	64	8x18x15.5-180°
22.192 *(250)*, **22.240** *(250)(FNL)* **22.32** *(FNL,UNL)*	77-90	•			**1741005380**	420	140x18.5/17.3x179 140x18.5/9.0x179		17410 17411	4x17410 + 4x17411	4xMP/34/1 + 4xMP/35/1	**8135100003**		56	10x18x18.5-140°(BQ/BW)
22.24 *(DF)* **22.192** *(250)*, **22.240** *(250)(FNL)*	77-90		•	**1949409580** **1949409530**	**1949405380** **1949401230** **1949401230**	410	163x17.0/11.8x178	**587017J** **587018J**	19494	8x19494	8xMP/31/2	**8162080001**	**810800J**	64	8x15x15.5-180°
22.192 *(FN)*	77-90	•	•		**1741005380**	420	140x18.5/17.3x179 140x18.5/9.0x179		17410 17411	4x17410 + 4x17411	4xMP/34/1 + 4xMP/35/1	**8135100003**		56	10x18x18.5-140°(BQ/BW)
	77-90		•		**1947305380**	440	160x18.4/15.5x184 160x18.4/10.4x184		19473 19747	4x19473 + 4x19474	4xMP/25/1 + 4xMP/26/1	**8135100003**		60	10x18x18.5-140°(BQ/BW)
22.22, 22.231, 22.281, 22.321, 22.361 *(FNL,FVLS,UNL)*	77-90		•	**1949609580** **1949609530**	**1949605380** **1949601230** **1949601230**	410	223x17.0/11.8x178	**587017J** **587018J**	19496	8x19496	8xMP/36/2	**8162080003**	**810800J**	64	8x20x15.5-180°
22.24 *(DF)*	77-90	•		**1768309530**	**1723805380** **1768301230**	410	143x17.0/11.8x178	**587017J** **587018J**	17238	8x17238	8xMP/30/2	**8162080002**	**810800J**	64	8x18x15.5-180°
22.24 *(H)* **22.28, 22.321, 22.32** *(FVLS,S)*	77-90	•		**1949409580** **1949409530**	**1949405380** **1949401230** **1949401230**	410	163x17.0/11.8x178	**587017J** **587018J**	19494	8x19494	8xMP/31/2	**8162080001**	**810800J**	64	8x15x15.5-180°
22.362 *(BL,FNL,UNL)*	86-	•		**1949409580** **1949409530**	**1949405380** **1949401230** **1949401230**	410	163x17.0/11.8x178	**587017J** **587018J**	19494	8x19494	8xMP/31/2	**8162080001**	**810800J**	64	8x15x15.5-180°
	86-		•	**1949609580** **1949609530**	**1949605380** **1949601230** **1949601230**	410	223x17.0/11.8x178	**587017J** **587018J**	19496	8x19496	8xMP/36/2	**8162080003**	**810800J**	64	8x20x15.5-180°
24.192, 24.24, 24.291, 24.331, 24.361, 26.192 *(FVL,FVL-KO,FVLR,FVLS)*	81-90	•		**1949409580** **1949409530**	**1949405380** **1949401230** **1949401230**	410	163x17.0/11.8x178	**587017J** **587018J**	19494	8x19494	8xMP/31/2	**8162080001**	**810800J**	64	8x15x15.5-180°
	81-90		•	**1949509580** **1949509530**	**1949505380** **1949501230** **1949501230**	410	183x17.0/11.8x178	**587017J** **587018J**	19495	8x19495	8xMP/32/2	**8162080002**	**810800J**	64	8x18x15.5-180°
	81-90		•	**1949609580** **1949609530**	**1949605380** **1949601230** **1949601230**	410	223x17.0/11.8x178	**587017J** **587018J**	19496	8x19496	8xMP/36/2	**8162080003**	**810800J**	64	8x20x15.5-180°
24.22, 24.24, 24.291, 24.331, 24.361 *(FNL,UNL)*	80-88	•	•	**1949409580** **1949409530**	**1949405380** **1949401230** **1949401230**	410	163x17.0/11.8x178	**587017J** **587018J**	19494	8x19494	8xMP/31/2	**8162080001**	**810800J**	64	8x15x15.5-180°
	80-88		•	**1949509580** **1949509530**	**1949505380** **1949501230** **1949501230**	410	183x17.0/11.8x178	**587017J** **587018J**	19495	8x19495	8xMP/32/2	**8162080002**	**810800J**	64	8x18x15.5-180°
	80-88		•	**1949609580** **1949609530**	**1949605380** **1949601230** **1949601230**	410	223x17.0/11.8x178	**587017J** **587018J**	19496	8x19496	8xMP/36/2	**8162080003**	**810800J**	64	8x20x15.5-180°

© JURID / All rights reserved 2005

© JURID / All rights reserved 2005


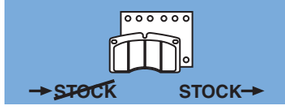

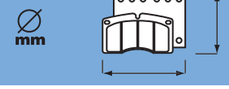






MAN...





F & H...

30.24*(DF,DFA,DH,DHA,DHR,VF)* **26.256***(274)*, **26.256***(278)*, **26.256***(279)(DF,DH,DHA)* **26.32***(DF,DFA,DFL,DH,DHA)* **26.192, 26.215, 26.232, 26.23, 30.192, 30.215, 30.232, 30.23, 30.256, 30.32** *(DH,DHA)* **26.230***(149)*, **26.240***(277)(DHA)* **26.28***(DF,DFA,DH,DHA)* **26.240***(275)*, **26.240***(276)(DF,DH)* **26.240***(247)*, **32.24***(DFA)*	73-90	•	**1949409580** **1949409530**	**1949405380** **1949401230** **1949401230**	410	163x17.0/11.8x178	**587017J** **587018J**	19494	8x19494	8xMP/31/2	**8162080001**	**810800J**	64	8x15x15.5-180°
26.32*(DF)* **26.256***(219)*, **26.256***(274)*, **26.256***(278)(DF,DH)* **26.192, 26.215, 26.23, 30.192, 30.215, 30.23, 30.256** *(DH)*	73-90	•		**1741005380**	420	140x18.5/17.3x179 140x18.5/9.0x179		17410 17411	4x17410 + 4x17411	4xMP/34/1 + 4xMP/35/1	**8135100003**		56	10x18x18.5-140°(BQ/BW)
26.256*(219)(DF)* **26.230***(149)(DHA)*	73-90	•		**1947305380**	440	160x18.4/15.5x184 160x18.4/10.4x184		19473 19747	4x19473 + 4x19474	4xMP/25/1 + 4xMP/26/1	**8135100003**		60	10x18x18.5-140°(BQ/BW)
26.281, 26.291, 26.321, 26.331, 26.361, 26.365 *(DF,DFA,DFL,DH,DHA)* **26.301***(DH,DHA)* **26.241***(533)(DHA)* **26.241***(532)(DH)*	79-90	•	**1949409580** **1949409530**	**1949405380** **1949401230** **1949401230**	410	163x17.0/11.8x178	**587017J** **587018J**	19494	8x19494	8xMP/31/2	**8162080001**	**810800J**	64	8x15x15.5-180°
26.281, 26.291, 26.321, 26.331, 26.361, 26.365*(DF,DFA,DFL,DH,DHA)* **26.241***(532)*, **26.241***(533)*, **26.301***(DH,DHA)*	79-90	•	**1949509580** **1949509530**	**1949505380** **1949501230** **1949501230**	410	183x17.0/11.8x178	**587017J** **587018J**	19495	8x19495	8xMP/32/2	**8162080002**	**810800J**	64	8x18x15.5-180°
26.281, 26.291, 26.321, 26.331, 26.361, 26.365*(DF,DFA,DFL,DH,DHA)* **26.241***(532)*, **26.241***(533)(DH,DHA)*	79-90	•	**1949609580** **1949609530**	**1949605380** **1949601230** **1949601230**	410	223x17.0/11.8x178	**587017J** **587018J**	19496	8x19496	8xMP/36/2	**8162080003**	**810800J**	64	8x20x15.5-180°
26.241*(532)*, **26.241***(533)*, **26.301**, **26.361***(DH,DHA)* **26.291***(DF,DFA)*	79-90	•	**1949409580** **1949409530**	**1949405380** **1949401230** **1949401230**	410	163x17.0/11.8x178	**587017J** **587018J**	19494	8x19494	8xMP/31/2	**8162080001**	**810800J**	64	8x15x15.5-180°
32.301, 32.321, 32.331, 32.361, 32.365 *(DF,DFA,DH,DHA,VFA,VFNL)* **32.291***(VFA)* **30.281, 30.321***(VF)* **32.281***(DF,DFA,DH,DHA)*	78-89	•	**1949609580** **1949609530**	**1949605380** **1949601230** **1949601230**	410	223x17.0/11.8x178	**587017J** **587018J**	19496	8x19496	8xMP/36/2	**8162080003**	**810800J**	64	8x20x15.5-180°

© JURID / All rights reserved 2005

© JURID / All rights reserved 2005

MAN...

F & H...

32.301, 32.321, 32.331, 32.361, 32.365 *(DF,DFA,DH,DHA,VFA,VFNL)* **30.28** *(VK 8x4)* **32.291** *(VFA)* **30.281, 30.321** *(VF)* **32.281** *(DF,DFA,DH,DHA)*	78-89	•	**1949509580** **1949509530**	**1949505380** **1949501230** **1949501230**	410	183x17.0/11.8x178	**587017J** **587018J**	19495	8x19495	8xMP/32/2	**8162080002**	**810800J**	64	8x18x15.5-180°
32.301, 32.321, 32.331, 32.361, 32.365 *(DF,DFA,DH,DHA,VFA,VFNL)* **30.28** *(VF,VK 8x4)* **32.291** *(VFA)* **30.281, 30.321** *(VF)* **32.281, 32.28** *(DF,DFA,DH,DHA)*	78-89	•	**1949409580** **1949409530**	**1949405380** **1949401230** **1949401230**	410	163x17.0/11.8x178	**587017J** **587018J**	19494	8x19494	8xMP/31/2	**8162080001**	**810800J**	64	8x15x15.5-180°
30.28 *(VF)* **32.28** *(DF,DFA,DH,DHA)*	78-89	•	**1949409580** **1949409530**	**1949405380** **1949401230** **1949401230**	410	163x17.0/11.8x178	**587017J** **587018J**	19494	8x19494	8xMP/31/2	**8162080001**	**810800J**	64	8x15x15.5-180°
32.241 *(DH,DHA)* **30.291, 30.331** *(VFR)*	84-89	•	**1949409580** **1949409530**	**1949405380** **1949401230** **1949401230**	410	163x17.0/11.8x178	**587017J** **587018J**	19494	8x19494	8xMP/31/2	**8162080001**	**810800J**	64	8x15x15.5-180°
	84-89	•	**1949509580** **1949509530**	**1949505380** **1949501230** **1949501230**	410	183x17.0/11.8x178	**587017J** **587018J**	19495	8x19495	8xMP/32/2	**8162080002**	**810800J**	64	8x18x15.5-180°
	84-89	•	**1949609580** **1949609530**	**1949605380** **1949601230** **1949601230**	410	223x17.0/11.8x178	**587017J** **587018J**	19496	8x19496	8xMP/36/2	**8162080003**	**810800J**	64	8x20x15.5-180°
32.32 *(DF,DFAK,DFAS,DH,S)*	77-89	• •	**1949409580** **1949409530**	**1949405380** **1949401230** **1949401230**	410	163x17.0/11.8x178	**587017J** **587018J**	19494	8x19494	8xMP/31/2	**8162080001**	**810800J**	64	8x15x15.5-180°
33.24, 33.28 *(VF,VFA)*	77-89	•	**1949409580** **1949409530**	**1949405380** **1949401230** **1949401230**	410	163x17.0/11.8x178	**587017J** **587018J**	19494	8x19494	8xMP/31/2	**8162080001**	**810800J**	64	8x15x15.5-180°
33.28 *(VFA)* **33.24** *(VF)* **33.32** *(DA 6x4,DA 6x6,DF 6x4,DF 6x6)*	77-89	•	**1949409580** **1949409530**	**1949405380** **1949401230** **1949401230**	410	163x17.0/11.8x178	**587017J** **587018J**	19494	8x19494	8xMP/31/2	**8162080001**	**810800J**	64	8x15x15.5-180°
33.291, 33.331 *(VFA)*	82-90	•	**1949409580** **1949409530**	**1949405380** **1949401230** **1949401230**	410	163x17.0/11.8x178	**587017J** **587018J**	19494	8x19494	8xMP/31/2	**8162080001**	**810800J**	64	8x15x15.5-180°
	82-90	•	**1949509580** **1949509530**	**1949505380** **1949501230** **1949501230**	410	183x17.0/11.8x178	**587017J** **587018J**	19495	8x19495	8xMP/32/2	**8162080002**	**810800J**	64	8x18x15.5-180°
	82-90	•	**1949609580** **1949609530**	**1949605380** **1949601230** **1949601230**	410	223x17.0/11.8x178	**587017J** **587018J**	19496	8x19496	8xMP/36/2	**8162080003**	**810800J**	64	8x20x15.5-180°
33.32 *(DA 6x4,DA 6x6,DF 6x4,DF 6x6)*	77-89	•	**1949509580** **1949509530**	**1949505380** **1949501230** **1949501230**	410	183x17.0/11.8x178	**587017J** **587018J**	19495	8x19495	8xMP/32/2	**8162080002**	**810800J**	64	8x18x15.5-180°
38.32 *(DA,DF)*	75-88	•	**1949409580** **1949409530**	**1949405380** **1949401230** **1949401230**	410	163x17.0/11.8x178	**587017J** **587018J**	19494	8x19494	8xMP/31/2	**8162080001**	**810800J**	64	8x15x15.5-180°
	75-88	•	**1949509580** **1949509530**	**1949505380** **1949501230** **1949501230**	410	183x17.0/11.8x178	**587017J** **587018J**	19495	8x19495	8xMP/32/2	**8162080002**	**810800J**	64	8x18x15.5-180°

© JURID / All rights reserved 2005

© JURID / All rights reserved 2005

				STOCK	STOCK	mm					WVA	BFMC	JURID	SUPASET	#		

MAN...

F & H...

40.365 **41.361** *(VFA)* **40.44** *(DF,DFA)*	82-88	•	**1949609580** **1949609530**	**1949605380** **1949601230** **1949601230**		410	223x17.0/11.8x178			**587017J** **587018J**	19496	8x19496	8xMP/36/2	**8162080003**	**810800J**	64	8x20x15.5-180°
40.365 **41.361** *(VFA)* **40.44, 40.4** *(DF,DFA)*	82-88	•	**1949409580** **1949409530**	**1949405380** **1949401230** **1949401230**		410	163x17.0/11.8x178			**587017J** **587018J**	19494	8x19494	8xMP/31/2	**8162080001**	**810800J**	64	8x15x15.5-180°
41.361 *(VFA)* **40.4** *(DF,DFA)*	82-88	•	**1949509580** **1949509530**	**1949505380** **1949501230** **1949501230**		410	183x17.0/11.8x178			**587017J** **587018J**	19495	8x19495	8xMP/32/2	**8162080002**	**810800J**	64	8x18x15.5-180°

F 2000

18.323, 18.373 *(FLD,FLT)*	95-	•		**2905304230**			250x30x118				29053	4x29053					
18.323, 18.373 *(FLD,FLT)* **18.423, 18.463** *(FLT)*	95-	•		**2903004230** **2903009560**			250x28x118				29030	4x29030					
26.603 *(DF,DFC,DFLC,DFLS,DFS)*	94-	•		**2903004230** **2903009560**		438	250x28x118	**567400J**		**587003J** **587023J**	29030	4x29030					
27.273, 27.293, 27.323, 27.343, 27.373, 27.403, 27.423, 27.463, 27.603 *(DF,DFS)* **26.273, 26.293, 26.323, 26.343, 26.373, 26.403, 26.423, 26.463** *(DF,DFC,DFLC,DFLS,DFS,FNL,FNLC, FNLLC,FNLS,FVL,FVLS)* **40.403, 40.463** *(DFS)* **23.293, 23.343, 23.373, 23.403, 23.463, 24.343, 24.403, 24.463** *(FNL,FVL)* **19.273, 19.293, 19.323, 19.343, 19.373, 19.403, 19.423, 19.463, 19.503, 19.603** *(F,FL,FLS,FLT,FS,FT)* **33.323, 33.343, 33.373, 33.403, 33.423, 33.463, 33.503, 33.603** *(DF,DFC,DFR,DFS,DFT)*	94-	•		**2905304230**		438	250x30x118	**567400J**		**587003J** **587023J**	29053	4x29053					
35.343, 35.403, 35.463 *(VF,VFA,VFAK,VFC,VFK)* **19.273, 19.293, 19.323, 19.343, 19.373, 19.403, 19.423, 19.463** *(F,FA,FAK,FAS,FAT,FK,FL,FLS,FLT, FS,FT)* **19.503, 19.603** *(F,FL,FLS,FLT,FS,FT)* **41.343, 41.403, 41.463, 48.343, 48.403, 48.463** *(VF,VFA,VFC,VFK)* **26.273, 26.293, 26.323, 26.343, 26.373, 26.423, 26.463, 6.403** *(FNL,FNLC,FNLLC,FNLS,FVL,FVLS)* **23.293, 23.343, 23.373, 23.403, 23.463, 24.343, 24.403, 24.463** *(FNL,FVL)*	94-	•	**1949609580** **1949609530**	**1949605380** **1949601230** **1949601230**		410	223x17.0/11.8x178			**587017J** **587018J**	19496	8x19496	8xMP/36/2	**8162080003**	**810800J**	64	8x20x15.5-180°

JURID by Honeywell
© JURID / All rights reserved 2005
© JURID / All rights reserved 2005
JURID by Honeywell

→STOCK STOCK→ ∅ mm WVA BFMC JURID SUPASET #

MAN...

F 2000...

35.343, 35.403, 35.463 *(VF,VFA,VFAK,VFC,VFK)* **19.273, 19.293, 19.323, 19.343, 19.373, 19.403, 19.423, 19.463** *(FA,FAK,FAS,FAT,FK)* **41.343, 41.403, 41.463, 48.343, 48.403, 48.463** *(CFK,VF,VFAVFC)*	94-	•		**1949509580 1949509530**	**1949505380 1949501230 1949501230**	410	183x17.0/11.8x178		**587017J 587018J**	19495	8x19495	8xMP/32/2	**8162080002**	**810800J**	64	8x18x15.5-180°
26.273, 26.293, 26.323, 26.343, 26.373, 26.403, 26.423, 26.463 *(FNL,FNLC,FNLLC,FNLS,FVL,FVLS)* **23.293, 23.343, 23.373, 23.403, 23.463, 24.343, 24.403, 24.463** *(FNL,FVL)*	94-		•		**1723805380**	410	143x17.0/11.8x178		**587017J 587018J**	17238	8x17238	8xMP/30/2	**8162080002**	**810800J**	64	8x18x15.5-180°
24.273, 24.293, 24.323, 24.343, 24.403, 24.423, 24.463	94-	•			**1949505380**	410	183x17.0/11.8x178		**587017J 587018J**	19495	8x19495	8xMP/32/2	**8162080002**	**810800J**	64	8x18x15.5-180°
	94-		•		**1949605380**	410	223x17.0/11.8x178		**587017J 587018J**	19496	8x19496	8xMP/36/2	**8162080003**	**810800J**	64	8x20x15.5-180°
26.273, 26.293, 26.323, 26.343, 26.373, 26.403, 26.423, 26.463, 26.603 *(DF,DFC,DFLC,DFLS,DFS)* **40.403, 40.463** *(DFS)* **27.273, 27.293, 27.323, 27.343, 27.373, 27.403, 27.423, 27.463, 27.603** *(DF,DFS)* **33.323, 33.343, 33.373, 33.403, 33.423, 33.463, 33.503, 33.603** *(DF,DFC,DFR,DFS,DFT)*	94-		•	**1949509580 1949509530**	**1949505380 1949501230 1949501230**	410	183x17.0/11.8x178		**587017J 587018J**	19495	8x19495	8xMP/32/2	**8162080002**	**810800J**	64	8x18x15.5-180°
27.273, 27.293, 27.343, 27.373, 27.403, 27.423, 27.463, 33.323, 33.343, 33.373, 33.403, 33.423, 33.463, 33.603 *(DFA,DFAC,DFAK,DFAS,DFK)* **40.403, 40.463** *(DFAK,DFAS,DFK)* **32.293, 32.343, 32.403, 32.463** *(VF,VFC,VFK)* **26.273, 26.293, 26.323, 26.343, 26.373, 26.403, 26.423, 26.463, 26.603** *(DFK,DFLK)*	94-	•	•	**1949509580 1949509530**	**1949505380 1949501230 1949501230**	410	183x17.0/11.8x178		**587017J 587018J**	19495	8x19495	8xMP/32/2	**8162080002**	**810800J**	64	8x18x15.5-180°
(O) : Knorr *(SB 7000)* **22.5"**	99-	•	•		**2910815390**	432	248x30x109	**567408J**		29108	4x29108					
	99-	•			**2910815390**	432	248x30x109	**567410J**		29108	4x29108					

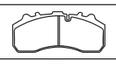

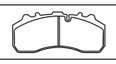

F 90

19.192 *(FA,HA)* **19.232** *(F,H,HA)*	85-94	•		**1949409580 1949409530**	**1949405380 1949401230 1949401230**	410	163x17.0/11.8x178		**587017J 587018J**	19494	8x19494	8xMP/31/2	**8162080001**	**810800J**	64	8x15x15.5-180°
	85-94		•	**1949509580 1949509530**	**1949505380 1949501230 1949501230**	410	183x17.0/11.8x178		**587017J 587018J**	19495	8x19495	8xMP/32/2	**8162080002**	**810800J**	64	8x18x15.5-180°

© JURID / All rights reserved 2005
© JURID / All rights reserved 2005

MAN...

F 90...

19.232*(F,H,HA)*	85-94	•	**1949409580** **1949409530**	**1949405380** **1949401230** **1949401230**	410	163x17.0/11.8x178	**587017J** **587018J**	19494	8x19494	8xMP/31/2	**8162080001**	**810800J**	64	8x15x15.5-180°
19.242, 19.262, 19.272, 19.292, 19.322, 19.332, 19.342, 19.362, 19.372, 19.402, 19.422, 19.462, 19.502 *(F,FK,FL,FLL,FS)*	85-94	•	**1949509580** **1949509530**	**1949505380** **1949501230** **1949501230**	410	183x17.0/11.8x178	**587017J** **587018J**	19495	8x19495	8xMP/32/2	**8162080002**	**810800J**	64	8x18x15.5-180°
	85-94	•	**1949609580** **1949609530**	**1949605380** **1949601230** **1949601230**	410	223x17.0/11.8x178	**587017J** **587018J**	19496	8x19496	8xMP/36/2	**8162080003**	**810800J**	64	8x20x15.5-180°
33.292, 33.362*(DFA 6x6)* **19.262, 19.272, 19.292, 19.322, 19.332, 19.342, 19.362, 19.372, 19.402, 19.422** *(FA,FAK,FAS)*	88-94	•	**1949409580** **1949409530**	**1949405380** **1949401230** **1949401230**	410	163x17.0/11.8x178	**587017J** **587018J**	19494	8x19494	8xMP/31/2	**8162080001**	**810800J**	64	8x15x15.5-180°
24.192, 24.232 *(FNL,FNLS,FVL,FVLS)* **24.402** *(FNL 6x2,FNLL 6x2,UNL 6x2, UNLL 6x2)* **20.192***(FVL-KO)* **19.292, 19.322, 19.332, 19.362, 19.372, 19.422** *(FL,FLR,FR,FVL)* **24.422** *(DF 6x4,DFK 6x4,DFLS 6x4, DFS 6x4,FNL 6x2,FNLL 6x2, UNL 6x2,UNLL 6x2)*	86-94	•	**1949609580** **1949609530**	**1949605380** **1949601230** **1949601230**	410	223x17.0/11.8x178	**587017J** **587018J**	19496	8x19496	8xMP/36/2	**8162080003**	**810800J**	64	8x20x15.5-180°
24.262 *(FNL,FNL 6x2,FNLL 6x2,FNLS,FVL, FVLS,UNL 6x2,UNLL 6x2)* **24.242, 24.292, 24.322, 24.332, 24.362, 24.372** *(DF 6x4,DFK 6x4,DFLS 6x4, DFS 6x4,FNL,FNL 6x2,FNLL 6x2, FNLS,FVL,FVLS,UNL 6x2,UNLL 6x2)* **24.272, 24.462** *(DF 6x4,DFK 6x4,DFLS 6x4, DFS 6x4,FNL,FNLS,FVL,FVLS)* **23.272, 23.322, 23.372, 23.422** *(FNL)*														

© JURID / All rights reserved 2005

© JURID / All rights reserved 2005

MAN...

...

F 90...

24.192, 24.232 *(FNL,FNLS,FVL,FVLS)* **24.402** *(FNL 6x2,FNLL 6x2,UNL 6x2, UNLL 6x2)* **19.292, 19.322, 19.332, 19.362, 19.372, 19.422** *(FL,FLR,FR,FVL)* **24.422** *(DF 6x4,DFK 6x4,DFLS 6x4, DFS 6x4,FNL 6x2,FNLL 6x2, UNL 6x2,UNLL 6x2)* **24.242, 24.262, 24.292, 24.322, 24.332, 24.362, 24.372** *(DF 6x4,DFK 6x4,DFLS 6x4, DFS 6x4,FNL,FNL 6x2,FNLL 6x2, FNLS,FVL,FVLS,UNL 6x2,UNLL 6x2)* **24.272, 24.462** *(DF 6x4,DFK 6x4,DFLS 6x4, DFS 6x4,FNL,FNLS,FVL,FVLS)* **23.272, 23.322, 23.372, 23.422** *(FNL)*	86-94	•	**1949509580** **1949509530**	**1949505380** **1949501230** **1949501230**	410	183x17.0/11.8x178	**587017J** **587018J**	19495	8x19495	8xMP/32/2	**8162080002**	**810800J**	64	8x18x15.5-180°
26.242, 26.262, 26.292, 26.332, 26.362, 26.462 **2.372, 32.272, 32.322, 32.422, 35.262, 35.272, 35.292, 35.322, 35.332, 35.362, 35.372, 35.422, 41.242, 41.262, 41.292, 41.302, 41.322, 41.332, 41.362, 41.372, 41.422, 41.502** *(VF,VFK)* **33.242, 33.262, 33.272, 33.292, 33.322, 33.332, 33.362, 33.372, 33.422, 33.462** *(DF,DFK,DFS)* **48.322, 48.372, 48.422, 48.502** *(VF)* **40.372, 40.422** *(DFK,DFS)* **19.502** *(F,FL,FS)* **26.272, 26.302, 26.322, 26.372, 26.422** *(DF 6x4,DFK 6x4,DFN 6x2, DFS 6x4,FLVS 6x2,FN 6x2, FNL 6x2,FVL 6x2)* **25.272, 25.302, 25.322, 25.372, 25.422** *(DF 6x4,DFK 6x4,DFLS 6x4, DFN 6x2,DFS 6x4,U 6x2,ULL 6x2)* **25.502** *(DF,DFN 6x2,DFS,U 6x2,ULL 6x2)* **26.502** *(FNL)* **26.342** *(DF 6x4,DFK 6x4,DFS 6x4)*	89-94	•	**1949509580** **1949509530**	**1949505380** **1949501230** **1949501230**	410	183x17.0/11.8x178	**587017J** **587018J**	19495	8x19495	8xMP/32/2	**8162080002**	**810800J**	64	8x18x15.5-180°

© JURID / All rights reserved 2005

© JURID / All rights reserved 2005

			→STOCK	STOCK→		∅ mm				WVA	BFMC	JURID	SUPASET	#		

MAN…

…

F 90…

32.272, 32.322, 32.372, 32.422, 41.242, 41.262, 41.292, 41.302, 41.322, 41.332, 41.362, 41.372, 41.422, 41.502 *(VF,VFK)* **27.502, 33.502** *(DF,DFA,DFAS,DFS)* **48.322, 48.372, 48.422, 48.502** *(VF,VFA,VFAK,VFAV)* **48.292, 48.332, 48.362, 48.462** *(VFA,VFAK,VFAV)* **19.502** *(F,FL,FS)* **26.502** *(DF,DFA,DFAS,DFS,FNL)* **35.262, 35.272, 35.292, 35.322, 35.332, 35.362, 35.372, 35.422** *(VF,VFA,VFAK,VFK)* **26.242, 26.292, 26.332** *(DFA,DFAK,DFAS)* **26.302** *(DF 6x4,DFA,DFAK,DFAS, DFK 6x4,DFS 6x4)* **25.272, 25.302, 25.322, 25.372, 25.422** *(DF 6x4,DFK 6x4,DFLS 6x4, DFN 6x2,DFS 6x4,U 6x2,ULL 6x2)* **27.272, 27.322, 27.372, 27.422, 33.242, 33.262, 33.272, 33.292, 33.322, 33.332, 33.362, 33.372, 33.422, 33.462** *(DF,DFA,DFAK,DFAS,DFK,DFS)* **25.502** *(DF,DFN 6x2,DFS,U 6x2,ULL 6x2)* **40.372, 40.422** *(DFAK,DFAS,DFK,DFS)* **26.342** *(DF 6x4,DFK 6x4,DFS 6x4)* **26.272, 26.322, 26.372, 26.422** *(DF 6x4,DFA,DFAK,DFAS, DFK 6x4,DFN 6x2,DFS 6x4, FLVS 6x2,FN 6x2,FNL 6x2,FVL 6x2)* **40.462, 40.502** *(DFAK,DFAS)*	89-94	•	**1949609580** **1949609530**	**1949605380** **1949601230** **1949601230**	410	223x17.0/11.8x178		**587017J** **587018J**	19496	8x19496	8xMP/36/2	**8162080003**	**810800J**	64	8x20x15.5-180°
25.502 *(DF)* **26.502** *(DF,DFS,FNL)* **19.502** *(F,FL,FS)* **27.502, 33.502** *(DF,DFS)* **48.502** *(VF)*	89-94	•		**2903004230** **2903009560**	438	250x28x118	**567400J**	**587003J** **587023J**	29030	4x29030					
26.502 *(DF,DFS,FNL)* **19.502** *(F,FL,FS)* **25.502, 27.502, 33.502** *(DF,DFS)* **48.502** *(VF)*	89-94	•		**2903004230** **2903009560**	432	250x28x118	**567406J**	**587003J** **587023J**	29030	4x29030					
	89-94	•		**2903004230** **2903009560**	432	250x28x118	**567408J**	**587003J** **587023J**	29030	4x29030					
	89-94	•		**2905304230**	438	250x30x118	**567400J**	**587003J** **587023J**	29053	4x29053					

JURID by Honeywell
© JURID / All rights reserved 2005
© JURID / All rights reserved 2005
JURID by Honeywell

				→STOCK	STOCK→		∅ mm					WVA	BFMC	JURID	SUPASET	#	

MAN...

...

F 90...

19.502 *(F +ABS,FL +ABS,FS +ABS)* **26.502** *(DF +ABS,DFS +ABS,FNL +ABS)* **48.502** *(VF +ABS)* **25.502, 27.502, 33.502** *(DF +ABS,DFS +ABS)*	89-94	•		**2905304230**		432	250x30x118	**567407J**		**587003J 587023J**	29053	4x29053					
26.502 *(DF,DFS,FNL)* **19.502** *(F,FL,FS)* **25.502, 27.502, 33.502** *(DF,DFS)* **48.502** *(VF)*	89-94	•		**2905304230**		432	250x30x118	**567408J**		**587003J 587023J**	29053	4x29053					
19.502 *(F +ABS,FL +ABS,FS +ABS)* **26.502** *(DF +ABS,DFS +ABS,FNL +ABS)* **48.502** *(VF +ABS)* **25.502, 33.502, 7.502** *(DF +ABS,DFS +ABS)*	89-94	•		**2903004230 2903009560**		432	250x28x118	**567407J**		**587003J 587023J**	29030	4x29030					
26.502 *(DF,DFS,FNL)* **19.502** *(F,FL,FS)* **25.502, 33.502, 7.502** *(DF,DFS)* **48.502** *(VF)*	89-94	•		**2905304230**		432	250x30x118	**567406J**		**587003J 587023J**	29053	4x29053					
24.192, 24.232 *(FNL,FVL)* **20.192** *(FVL-KO)* **24.242, 24.262, 24.292, 24.322, 24.332, 24.362, 24.372, 24.422, 24.462** *(DF 6x4,DFK 6x4,DFLS 6x4, DFS 6x4)* **24.272** *(DF 6x4,DFK 6x4,DFLS 6x4, DFS 6x4,FNL,FVL)*	86-94	•	**1949509580 1949509530**	**1949505380 1949501230 1949501230**		410	183x17.0/11.8x178			**587017J 587018J**	19495	8x19495	8xMP/32/2	**8162080002**	**810800J**	64	8x18x15.5-180°
24.192, 24.232, 24.272 *(FNL,FVL)* **20.192** *(FVL-KO)*	86-94	•	**1949409580 1949409530**	**1949405380 1949401230 1949401230**		410	163x17.0/11.8x178			**587017J 587018J**	19494	8x19494	8xMP/31/2	**8162080001**	**810800J**	64	8x15x15.5-180°
24.272 *(FNL,FVL,FVLS)* **23.272, 23.322, 23.372, 23.422** *(FNL)* **24.192, 24.232, 24.242, 24.262** *(FNL,FNLS,FVL,FVLS)*	86-94	•	**1768309530**	**1723805380 1768301230**		410	143x17.0/11.8x178			**587017J 587018J**	17238	8x17238	8xMP/30/2	**8162080002**	**810800J**	64	8x18x15.5-180°
24.242, 24.262, 24.402, 24.422 *(FNL 6x2,FNLL 6x2,UNL 6x2,UNLL 6x2)* **24.272** *(FNL,FNLS,FVL)* **24.292, 24.322, 24.332, 24.362, 24.372** *(FNL,FNL 6x2,FNLL 6x2,FNLS, FVL,FVLS,UNL 6x2,UNLL 6x2)* **24.462** *(FNL,FNLS,FVL,FVLS)*	86-94	•		**1723805380 1768309530**		410	143x17.0/11.8x178			**587017J 587018J**	17238	8x17238	8xMP/30/2	**8162080002**	**810800J**	64	8x18x15.5-180°

JURID by Honeywell
© JURID / All rights reserved 2005
© JURID / All rights reserved 2005
JURID by Honeywell

→STOCK STOCK→ ∅ mm WVA BFMC JURID SUPASET #

MAN...

...

F 90...

24.502(*DF*)	94-	•		**2903004230** **2903009560**		250x28x118	**587003J** **587023J**	29030	4x29030					
	94-	•		**2905304230**		250x30x118	**587003J** **587023J**	29053	4x29053					
	94-	•	**1949609580** **1949609530**	**1949605380** **1949601230** **1949601230**	410	223x17.0/11.8x178	**587017J** **587018J**	19496	8x19496	8xMP/36/2	**8162080003**	**810800J**	64	8x20x15.5-180°
25.272, 25.302, 25.322, 25.372, 25.422, 25.502 *(DFN 6x2,U 6x2,ULL 6x2)* **26.502**(*FNL*) **26.272, 26.322, 26.372, 26.422** *(DFN 6x2,FLVS 6x2,FN 6x2, FNL 6x2,FVL 6x2)*	89-94	•		**1723805380** **1768309530**	410	143x17.0/11.8x178	**587017J** **587018J**	17238	8x17238	8xMP/30/2	**8162080002**	**810800J**	64	8x18x15.5-180°
26.242, 26.262, 26.292, 26.332, 26.362, 26.462 **26.272, 26.302, 26.322, 26.342, 26.372, 26.422** *(DF 6x4,DFK 6x4,DFS 6x4)* **40.502**(*DFAK,DFAS*) **25.272, 25.302, 25.322, 25.372, 25.422** *(DF 6x4,DFK 6x4,DFLS 6x4, DFS 6x4)*	89-94	•	**1949509580** **1949509530**	**1949505380** **1949501230** **1949501230**	410	183x17.0/11.8x178	**587017J** **587018J**	19495	8x19495	8xMP/32/2	**8162080002**	**810800J**	64	8x18x15.5-180°
41.242, 41.262, 41.292, 41.302, 41.322, 41.332, 41.362, 41.372, 41.422, 41.502 *(VF,VFK)* **27.502, 3.502**(*DFA,DFAS*) **26.242, 26.292**(*e*) **27.502., 33.502**(*DF,DFS*) **26.502**(*DF,DFA,DFAS,DFS*) **26.272, 26.302, 26.322, 26.332, 26.372, 26.422, 33.242, 33.262, 33.272, 33.292, 33.322, 33.332, 33.362, 33.372, 33.422, 33.462** *(DFA,DFAK,DFAS)* **35.262, 35.272, 35.292, 35.322, 35.332, 35.362, 35.372, 35.422** *(VF,VFA,VFAK,VFK)* **27.272, 27.322, 27.372, 27.422** *(DF,DFA,DFAK,DFAS,DFK,DFS)* **40.502** *(DFAK 6x6,DFAK 8x8,DFAS 6x6, DFAS 8x8)* **48.292, 48.322, 48.332, 48.362, 48.372, 48.422, 48.462, 48.502** *(VFA,VFAK,VFAV)* **40.372, 40.422, 40.462** *(DFAK,DFAS)*	89-94	•	**1949409580** **1949409530**	**1949405380** **1949401230** **1949401230**	410	163x17.0/11.8x178	**587017J** **587018J**	19494	8x19494	8xMP/31/2	**8162080001**	**810800J**	64	8x15x15.5-180°

JURID by Honeywell © JURID / All rights reserved 2005
© JURID / All rights reserved 2005 JURID by Honeywell

MAN...

F 90...

26.304*(DFL)*		•		**1741005380**	420	140x18.5/17.3x179 140x18.5/9.0x179		17410 17411	4x17410 + 4x17411	4xMP/34/1 + 4xMP/35/1	**8135100003**		56	10x18x18.5-140°(BQ/BW)
		•		**1947305380**	440	160x18.4/15.5x184 160x18.4/10.4x184		19473 19747	4x19473 + 4x19474	4xMP/25/1 + 4xMP/26/1	**8135100003**		60	10x18x18.5-140°(BQ/BW)
30.332*(VFNL 8x2,VFNL 8x6)* **30.292, 32.332, 32.362***(UK)*	88-94	•		**1949509580** **1949509530**	**1949505380** **1949501230** **1949501230**	410	183x17.0/11.8x178	**587017J** **587018J**	19495	8x19495	8xMP/32/2	**8162080002**	**810800J**	64	8x18x15.5-180°
33.292, 33.362*(DFA 6x6)* **30.332***(VFNL)* **30.292, 32.332, 32.362***(UK)*	88-94		•	**1949609580** **1949609530**	**1949605380** **1949601230** **1949601230**	410	223x17.0/11.8x178	**587017J** **587018J**	19496	8x19496	8xMP/36/2	**8162080003**	**810800J**	64	8x20x15.5-180°
33.292, 33.362*(DFA 6x6)* **30.292, 32.332, 32.362***(UK)*	88-94	•		**1949509580** **1949509530**	**1949505380** **1949501230** **1949501230**	410	183x17.0/11.8x178	**587017J** **587018J**	19495	8x19495	8xMP/32/2	**8162080002**	**810800J**	64	8x18x15.5-180°
32.332, 32.362, 38.292*(VFNL)*	89-90	•		**1949509580** **1949509530**	**1949505380** **1949501230** **1949501230**	410	183x17.0/11.8x178	**587017J** **587018J**	19495	8x19495	8xMP/32/2	**8162080002**	**810800J**	64	8x18x15.5-180°
	89-90		•	**1949509580** **1949509530**	**1949505380** **1949501230** **1949501230**	410	183x17.0/11.8x178	**587017J** **587018J**	19495	8x19495	8xMP/32/2	**8162080002**	**810800J**	64	8x18x15.5-180°
	89-90		•	**1949609580** **1949609530**	**1949605380** **1949601230** **1949601230**	410	223x17.0/11.8x178	**587017J** **587018J**	19496	8x19496	8xMP/36/2	**8162080003**	**810800J**	64	8x20x15.5-180°
32.372, 32.422, 38.322*(VFNL)*	90-94	•		**1949509580** **1949509530**	**1949505380** **1949501230** **1949501230**	410	183x17.0/11.8x178	**587017J** **587018J**	19495	8x19495	8xMP/32/2	**8162080002**	**810800J**	64	8x18x15.5-180°
32.372, 38.322*(VFNL)*	90-94		•	**1949509580** **1949509530**	**1949505380** **1949501230** **1949501230**	410	183x17.0/11.8x178	**587017J** **587018J**	19495	8x19495	8xMP/32/2	**8162080002**	**810800J**	64	8x18x15.5-180°
32.422*(VFNL)*	90-94		•	**1949609580** **1949609530**	**1949605380** **1949601230** **1949601230**	410	223x17.0/11.8x178	**587017J** **587018J**	19496	8x19496	8xMP/36/2	**8162080003**	**810800J**	64	8x20x15.5-180°
35.302, 35.422*(8x6,8x8)*	-94	•		**1949409580** **1949409530**	**1949405380** **1949401230** **1949401230**	410	163x17.0/11.8x178	**587017J** **587018J**	19494	8x19494	8xMP/31/2	**8162080001**	**810800J**	64	8x15x15.5-180°
	-94		•	**1949509580** **1949509530**	**1949505380** **1949501230** **1949501230**	410	183x17.0/11.8x178	**587017J** **587018J**	19495	8x19495	8xMP/32/2	**8162080002**	**810800J**	64	8x18x15.5-180°
	-94		•	**1949609580** **1949609530**	**1949605380** **1949601230** **1949601230**	410	223x17.0/11.8x178	**587017J** **587018J**	19496	8x19496	8xMP/36/2	**8162080003**	**810800J**	64	8x20x15.5-180°
40.242, 40.262, 40.292, 40.332, 40.362	87-94	•		**1949509580** **1949509530**	**1949505380** **1949501230** **1949501230**	410	183x17.0/11.8x178	**587017J** **587018J**	19495	8x19495	8xMP/32/2	**8162080002**	**810800J**	64	8x18x15.5-180°
	87-94		•	**1949609580** **1949609530**	**1949605380** **1949601230** **1949601230**	410	223x17.0/11.8x178	**587017J** **587018J**	19496	8x19496	8xMP/36/2	**8162080003**	**810800J**	64	8x20x15.5-180°

G 90

10.15, 9.15*(◯ : Perrot)*	87-93	•	•	**1790009580**	**1790003270**	325	146.5x12.1x301 146.5x12.1x251		17900 17901	2x17900 + 2x17901	2xMP/39/1 + 2xMP/40/1	**8103080007**	**810800J**	44	8x20x15.5-180°
10.15, 9.15*(◯ : Girling)*	87-93	•	•		**1798805380**	325	149.2x17.5/13.0x142		17988	8x17988	8xGG/210/1	**8103080003**	**810800J**	64	8x15x15.5-180°
6.1, 8.15, 8.1*(◯ : Perrot)*	87-93	•	•	**1581709580**	**1581703320**	325	96.5x12.0x312 96.5x12.0x258		15817 15823	2x15817 + 2x15823	2xMP/37/1 + 2xMP/38/1	**8103080007**	**810800J**	44	8x20x15.5-180°
6.1, 8.15, 8.1*(◯ : Girling)*	87-93	•	•	**1587909580**	**1587905380**	325	99.2x17.5/15.6x142		15879	8x15879	8xGG/209/1	**8103080003**	**810800J**	48	8x15x15.5-180°

JURID by Honeywell

© JURID / All rights reserved 2005

© JURID / All rights reserved 2005

JURID by Honeywell

				STOCK	STOCK	⌀ mm				WVA	BFMC	JURID	SUPASET	#	

MAN...

...

G

6.9, 8.9*(◯ : Perrot,◯ : Rockwell)* **10.136, 8.136, 8.17, 9.136, 9.17** *(◯ : Perrot)*	78-88	•	•	**1790009580**	**1790003270**	325	146.5x12.1x301 146.5x12.1x251			17900 17901	2x17900 + 2x17901	2xMP/39/1 + 2xMP/40/1	**8103080007**	**810800J**	44	8x20x15.5-180°
10.136, 8.136, 8.17, 9.136, 9.17 *(◯ : Girling)* **6.9, 8.9***(◯ : Girling,◯ : Rockwell)*	87-88	•	•		**1798805380**	325	149.2x17.5/13.0x142			17988	8x17988	8xGG/210/1	**8103080003**	**810800J**	64	8x15x15.5-180°
10.168, 11.136, 9.168, 9.192	71-73	•			**1741005380**	420	140x18.5/17.3x179 140x18.5/9.0x179			17410 17411	4x17410 + 4x17411	4xMP/34/1 + 4xMP/35/1	**8135100003**		56	10x18x18.5-140°(BQ/BW)
	71-73		•		**1947305380**	440	160x18.4/15.5x184 160x18.4/10.4x184			19473 19747	4x19473 + 4x19474	4xMP/25/1 + 4xMP/26/1	**8135100003**		60	10x18x18.5-140°(BQ/BW)
11.136, 7.136*(F,FK)*	71-73	•	•		**1750003320**	406	100x10.0x284 100x10.0x346			17500 17506	2x17500 + 2x17506	2xSA/17/1 + 2xSA/18/1	**8103054001**	**810540J**	80	5.4x14.5x10.5-180°(BK)
4.7*(F,FK)*	70-	•			**1569803320**	305	80x7.5x292			15698	4x15698	4xSA/14/1	**8103040002**	**810400J**	48	4x8x7.5-180°
	70-		•		**1346403320**	305	45x7.5x318 45x7.5x265			13464 13465	2x13464 + 2x13465	2xSA/15/1 + 2xSA/16/1	**8103040002**	**810400J**	52	4x8x7.5-180°
5.136, 6.136, 7.136, 9.136*(F,FK)*	73-78	•	•		**1749705380**	356	100x10.0x302 100x10.0x349			17497 17498	2x17497 + 2x17498	2xBT/52/1 + 2xBT/53/1	**8102050009**	**810500J**	60	5x13x9.5-180°
6.85, 6.9	70-		•		**1510403320**	360	75x6.5x361 75x6.5x304			15104 15107	2x15104 + 2x15107	2xRN/58/1 + 2xRN/57/1	**8103040002**	**810400J**	52	4x8x7.5-180°
6.9*(◯ : Perrot)*	78-88	•	•	**1581709580**	**1581703320**	325	96.5x12.0x312 96.5x12.0x258			15817 15823	2x15817 + 2x15823	2xMP/37/1 + 2xMP/38/1	**8103080007**	**810800J**	44	8x20x15.5-180°
6.9*(◯ : Girling)*	87-88	•	•	**1587909580**	**1587905380**	325	99.2x17.5/15.6x142			15879	8x15879	8xGG/209/1	**8103080003**	**810800J**	48	8x15x15.5-180°
7.85, 7.9	70-	•	•		**1774403320**	325	100x10.0x272			17744	4x17744		**8102050004**	**810500J**	72	5x10x11-180°
8.136, 9.136*(FAE)*	83-87	•	•	**1701709580**		360	143x16.3/11.3x190			17017	8x17017	8xGG/217/1	**8103080003**	**810800J**	64	8x15x15.5-180°
	83-87	•	•		**1724405380**	360	143x16.3/12.6x173			17244	8x17244	8xPD/2/1	**8103080003**	**810800J**	64	8x15x15.5-180°

L 2000

10.153, 10.163, 10.223, 10.224, 6.103, 6.153, 8.103, 8.153, 8.163, 8.223, 8.224, 9.153, 9.163, 9.223, 9.224 *(F,FL,FLS,LC,LLC)*	93-96	•		**2905503010**	**2905509560**	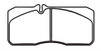	325	175.8x22x77	**567401J**			29055	4x29055				
	93-96	•		**2905603010**			325	175.8x23x77	**567401J**			29056	4x29056				
10.153, 10.223, 10.224, 9.153, 9.223 *(F,FL,FLS,LC,LLC)*	93-96		•		**1798805380**		325	149.2x17.5/13.0x142				17988	8x17988	8xGG/210/1	**8103080003**	**810800J**	64	8x15x15.5-180°
10.153, 10.223, 6.103, 6.153, 8.103, 8.153, 8.223, 9.153, 9.223 *(F,FA,FAE,FAK,FK,FL,FLS)*	96-	•	•	**2909103010**			330	175.6x27x85	**567402J**		**587022J**	29091	4x29091				
10.153, 10.223, 6.103, 6.153, 8.103, 8.153, 8.223, 9.153, 9.223 *(F +ABS,FA +ABS,FAE +ABS, FAK +ABS,FK +ABS,FL +ABS, FLS +ABS)*	96-	•	•	**2909103010**			330	175.6x27x85	**567405J**		**587022J**	29091	4x29091				
10.153, 10.223, 6.103, 6.153, 8.103, 8.153, 8.223, 9.153, 9.223 *(F,FA,FAE,FAK,FK,FL,FLS)*	96-	•	•		**2908809560**		330	175.6x26x85	**567402J**		**587022J**	29088	4x29088				
10.153, 10.223, 6.103, 6.153, 8.103, 8.153, 8.223, 9.153, 9.223 *(F +ABS,FA +ABS,FAE +ABS, FAK +ABS,FK +ABS,FL +ABS, FLS +ABS)*	96-	•	•		**2908809560**		330	175.6x26x85	**567405J**		**587022J**	29088	4x29088				
10.153, 10.223, 6.103, 6.153, 8.103, 8.153, 8.223, 9.153, 9.223 *(FA,FAE,FAK,FK)*	93-96	•			**1798805380**		325	149.2x17.5/13.0x142				17988	8x17988	8xGG/210/1	**8103080003**	**810800J**	64	8x15x15.5-180°
	93-		•		**1798805380**		325	149.2x17.5/13.0x142				17988	8x17988	8xGG/210/1	**8103080003**	**810800J**	64	8x15x15.5-180°

JURID by Honeywell

© JURID / All rights reserved 2005

© JURID / All rights reserved 2005

JURID by Honeywell

MAN…

…

L 2000…

7.153, 7.163 *(F,FK,FL)* **10.163, 10.224, 8.163, 8.224** *(F,FL,FLS)*	96-	•	•		**2908809560**			175.6x26x85		**587022J**	29088	4x29088					
6.103, 6.153, 8.103, 8.153, 8.223, 8.224 *(F,FL,FLS,LC,LLC)*	93-96		•	**1587909580**	**1587905380**		325	99.2x17.5/15.6x142			15879	8x15879	8xGG/209/1	**8103080003**	**810800J**	48	8x15x15.5-180°
7.153, 7.163 *(F,FK,FL)*	93-96	•		**2905503010**	**2905509560**		325	175.8x22x77			29055	4x29055					

M 2000

12.163, 12.164, 12.224 *(+ABS)*	96-	•	•	**2909103010**			330	175.6x27x85	**567405J**	**587022J**	29091	4x29091					
	96-	•	•		**2908809560**		330	175.6x26x85	**567405J**		29088	4x29088					
14.163, 14.164, 14.224, 14.264	96-	•			**2909305390**		377	210.7x30x92.5	**567403J**	**587020J**	29093	4x29093					
	96-		•	**1917709580**	**1917701230**		360	163x16.3/11.6x190			19177	8x19177	8xGG/218/1	**8103080003**	**810800J**	96	8x15x15.5-180°
	96-		•		**1950405380**		360	163x16.3/12.6x173			19504	8x19504	8xGG/213/1	**8103080003**	**810800J**	96	8x15x15.5-180°
14.163, 14.164, 14.224, 14.264, 15.163, 15.164, 15.224, 15.264, 18.224, 18.264, 25.224, 25.264	96-		•		**1970803270**		360	183x16.3/12.7x174			19708	8x19708	8xGG/232/1	**8103080003**	**810800J**	96	8x15x15.5-180°
15.163, 15.164, 15.224, 15.264, 18.224, 18.264, 25.224, 25.264	96-	•			**2903004230** **2903009560**		432	250x28x118	**567408J**	**587003J** **587023J**	29030	4x29030					
	96-	•			**2905304230**		432	250x30x118	**567408J**	**587003J** **587023J**	29053	4x29053					
	96-		•	**1949509580** **1949509530**	**1949505380** **1949501230** **1949501230**		410	183x17.0/11.8x178		**587017J** **587018J**	19495	8x19495	8xMP/32/2	**8162080002**	**810800J**	64	8x18x15.5-180°
	96-		•	**1949609580** **1949609530**	**1949605380** **1949601230** **1949601230**		410	223x17.0/11.8x178		**587017J** **587018J**	19496	8x19496	8xMP/36/2	**8162080003**	**810800J**	64	8x20x15.5-180°

M 90

12.152, 12.182, 12.192A, 12.192, 12.222, 12.232 *(A,L)* **14.152, 14.182, 14.192, 14.222** *(L)*	87-88	•			**1724405380**		360	143x16.3/12.6x173			17244	8x17244	8xPD/2/1	**8103080003**	**810800J**	64	8x15x15.5-180°
12.152, 12.182, 12.192A, 12.192, 12.222, 12.232 *(A,L)* **14.232** *(L)*	87-88		•		**1950405380**		360	163x16.3/12.6x173			19504	8x19504	8xGG/213/1	**8103080003**	**810800J**	96	8x15x15.5-180°
14.152, 14.162, 14.182, 14.192, 14.222, 14.232, 14.262, 14.272 *(F,FA,FK,FL,FLS)*	88-96		•	**1917709580**	**1917701230**		360	163x16.3/11.6x190			19177	8x19177	8xGG/218/1	**8103080003**	**810800J**	96	8x15x15.5-180°
12.152, 12.182, 12.192, 12.222, 12.232, 12.262, 12.272 *(F,FK,FL,FLS)*	88-96		•		**1950405380**		360	163x16.3/12.6x173			19504	8x19504	8xGG/213/1	**8103080003**	**810800J**	96	8x15x15.5-180°
14.152, 14.162, 14.182, 14.192, 14.222, 14.232, 14.262, 14.272 *(F,FA,FK,FL,FLS)*	88-91	•		**1701709580**			360	143x16.3/11.3x190			17017	8x17017	8xGG/217/1	**8103080003**	**810800J**	64	8x15x15.5-180°
	88-91	•			**1724405380**		360	143x16.3/12.6x173			17244	8x17244	8xPD/2/1	**8103080003**	**810800J**	64	8x15x15.5-180°
	91-96	•		**1701709580**			360	143x16.3/11.3x190			17017	8x17017	8xGG/217/1	**8103080003**	**810800J**	64	8x15x15.5-180°
12.152, 12.182, 12.192, 12.222, 12.232, 12.272 *(F,FK,FL,FLS)*	91-96	•			**1724405380**		360	143x16.3/12.6x173			17244	8x17244	8xPD/2/1	**8103080003**	**810800J**	64	8x15x15.5-180°

© JURID / All rights reserved 2005

© JURID / All rights reserved 2005

MAN…

…

M 90…

14.152, 14.182, 14.192, 14.222, 14.232	96-	•		**1970803270**	360	183x16.3/12.7x174		19708	8x19708	8xGG/232/1	**8103080003**	**810800J**	96	8x15x15.5-180°
17.152, 17.182, 17.192, 17.222, 17.232, 17.272 *(A,F,FD,FL,FT,FTS,L)*	87-96	•	**1949409580** **1949409530**	**1949405380** **1949401230** **1949401230**	410	163x17.0/11.8x178	**587017J** **587018J**	19494	8x19494	8xMP/31/2	**8162080001**	**810800J**	64	8x15x15.5-180°
	87-96	•	**1949509580** **1949509530**	**1949505380** **1949501230** **1949501230**	410	183x17.0/11.8x178	**587017J** **587018J**	19495	8x19495	8xMP/32/2	**8162080002**	**810800J**	64	8x18x15.5-180°
	87-96	•	**1949609580** **1949609530**	**1949605380** **1949601230** **1949601230**	410	223x17.0/11.8x178	**587017J** **587018J**	19496	8x19496	8xMP/36/2	**8162080003**	**810800J**	64	8x20x15.5-180°
18.192, 18.222, 18.232, 18.241, 18.262, 18.272 *(A,L)*	91-96	•	**1949409580** **1949409530**	**1949405380** **1949401230** **1949401230**	410	163x17.0/11.8x178	**587017J** **587018J**	19494	8x19494	8xMP/31/2	**8162080001**	**810800J**	64	8x15x15.5-180°
18.192, 18.232, 18.241 *(A,L)*	91-96	•	**1949509580** **1949509530**	**1949505380** **1949501230** **1949501230**	410	183x17.0/11.8x178	**587017J** **587018J**	19495	8x19495	8xMP/32/2	**8162080002**	**810800J**	64	8x18x15.5-180°
	91-96	•	**1949609580** **1949609530**	**1949605380** **1949601230** **1949601230**	410	223x17.0/11.8x178	**587017J** **587018J**	19496	8x19496	8xMP/36/2	**8162080003**	**810800J**	64	8x20x15.5-180°
24.192, 24.222, 24.232, 24.272 *(FNL,FNLL,FVL)*	96-	•	**1949409580** **1949409530**	**1949405380** **1949401230** **1949401230**	410	163x17.0/11.8x178		19494	8x19494	8xMP/31/2	**8162080001**	**810800J**	64	8x15x15.5-180°
	96-	•	**1949509580** **1949509530**	**1949505380** **1949501230** **1949501230**	410	183x17.0/11.8x178		19495	8x19495	8xMP/32/2	**8162080002**	**810800J**	64	8x18x15.5-180°
	96-	•		**1723805380**	410	143x17.0/11.8x178		17238	8x17238	8xMP/30/2	**8162080002**	**810800J**	64	8x18x15.5-180°

M

12.136, 12.152, 12.17, 12.192, 12.232	82-89	•	**1701709580**		360	143x16.3/11.3x190		17017	8x17017	8xGG/217/1	**8103080003**	**810800J**	64	8x15x15.5-180°
	82-89	•		**1724405380**	360	143x16.3/12.6x173		17244	8x17244	8xPD/2/1	**8103080003**	**810800J**	64	8x15x15.5-180°
	82-89	•	**1917709580**	**1917701230**	360	163x16.3/11.6x190		19177	8x19177	8xGG/218/1	**8103080003**	**810800J**	96	8x15x15.5-180°
	82-89	•		**1950405380**	360	163x16.3/12.6x173		19504	8x19504	8xGG/213/1	**8103080003**	**810800J**	96	8x15x15.5-180°
13.168, 13.192	73-84	•		**1768205380** **1768209530**	410	123x17.0/11.8x178		17682	8x17682	8xMP/29/1	**8162080001**	**810800J**	64	8x15x15.5-180°
	73-84	•	**1949409580** **1949409530**	**1949405380** **1949401230** **1949401230**	410	163x17.0/11.8x178	**587017J** **587018J**	19494	8x19494	8xMP/31/2	**8162080001**	**810800J**	64	8x15x15.5-180°
	73-84	•	**1949509580** **1949509530**	**1949505380** **1949501230** **1949501230**	410	183x17.0/11.8x178	**587017J** **587018J**	19495	8x19495	8xMP/32/2	**8162080002**	**810800J**	64	8x18x15.5-180°
14.136, 14.17, 14.192	83-89	•	**1701709580**		360	143x16.3/11.3x190		17017	8x17017	8xGG/217/1	**8103080003**	**810800J**	64	8x15x15.5-180°
	83-89	•		**1724405380**	360	143x16.3/12.6x173		17244	8x17244	8xPD/2/1	**8103080003**	**810800J**	64	8x15x15.5-180°
	83-89	•	**1917709580**	**1917701230**	360	163x16.3/11.6x190		19177	8x19177	8xGG/218/1	**8103080003**	**810800J**	96	8x15x15.5-180°
	83-89	•		**1950405380**	360	163x16.3/12.6x173		19504	8x19504	8xGG/213/1	**8103080003**	**810800J**	96	8x15x15.5-180°
14.168, 14.192 *(F)*	73-83	•	**1949509580** **1949509530**	**1949505380** **1949501230** **1949501230**	410	183x17.0/11.8x178	**587017J** **587018J**	19495	8x19495	8xMP/32/2	**8162080002**	**810800J**	64	8x18x15.5-180°
16.240 *(256)(H)* **16.168, 16.192, 16.232, 16.24, 16.2** *(F,FL,FR,H,HR)* **14.168, 14.192** *(F)*	73-83	•		**1723805380** **1768309530**	410	143x17.0/11.8x178	**587017J** **587018J**	17238	8x17238	8xMP/30/2	**8162080002**	**810800J**	64	8x18x15.5-180°

JURID by Honeywell

© JURID / All rights reserved 2005

© JURID / All rights reserved 2005

JURID by Honeywell

MAN...

M...

14.192*(U,UBP,UL)*	77-	•	**1949409580** **1949409530**	**1949405380** **1949401230** **1949401230**	410	163x17.0/11.8x178	**587017J** **587018J**	19494	8x19494	8xMP/31/2	**8162080001**	**810800J**	64	8x15x15.5-180°
	77-	•		**1768205380** **1768209530**	410	123x17.0/11.8x178		17682	8x17682	8xMP/29/1	**8162080001**	**810800J**	64	8x15x15.5-180°
	77-	•	**1949509580** **1949509530**	**1949505380** **1949501230** **1949501230**	410	183x17.0/11.8x178	**587017J** **587018J**	19495	8x19495	8xMP/32/2	**8162080002**	**810800J**	64	8x18x15.5-180°
14.22, **14.24**	78-89	•		**1723805380** **1768309530**	410	143x17.0/11.8x178	**587017J** **587018J**	17238	8x17238	8xMP/30/2	**8162080002**	**810800J**	64	8x18x15.5-180°
	78-89	•	**1949509580** **1949509530**	**1949505380** **1949501230** **1949501230**	410	183x17.0/11.8x178	**587017J** **587018J**	19495	8x19495	8xMP/32/2	**8162080002**	**810800J**	64	8x18x15.5-180°
	78-89	•	**1949609580** **1949609530**	**1949605380** **1949601230** **1949601230**	410	223x17.0/11.8x178	**587017J** **587018J**	19496	8x19496	8xMP/36/2	**8162080003**	**810800J**	64	8x20x15.5-180°
15.168*(540)(F,H)* **15.168**, **15.192***(541)*, **15.240***(525)(HA)*	73-82	•	**1949609580** **1949609530**	**1949605380** **1949601230** **1949601230**	410	223x17.0/11.8x178	**587017J** **587018J**	19496	8x19496	8xMP/36/2	**8162080003**	**810800J**	64	8x20x15.5-180°
15.240*(224)*, **15.240***(226)*, **15.2***(F,H)* **15.192***(236)*, **15.200***(227)*, **15.240***(227)(HA)* **15.168**, **15.232***(224)*, **15.232***(226)*, **15.232***(227)(F,H,HA)*	73-82	•	**1949409580** **1949409530**	**1949405380** **1949401230** **1949401230**	410	163x17.0/11.8x178	**587017J** **587018J**	19494	8x19494	8xMP/31/2	**8162080001**	**810800J**	64	8x15x15.5-180°
15.168, **15.192**, **15.200***(227)*, **15.24***(HA)* **15.232***(224)*, **15.232***(226)*, **15.232***(227)(F,H,HA)*	73-82	•	**1949409580** **1949409530**	**1949405380** **1949401230** **1949401230**	410	163x17.0/11.8x178	**587017J** **587018J**	19494	8x19494	8xMP/31/2	**8162080001**	**810800J**	64	8x15x15.5-180°
15.240*(224)*, **15.240***(226)*, **15.2***(F,H)* **15.192**, **15.200***(227)*, **15.24***(HA)* **15.168**, **15.232***(224)*, **15.232***(226)*, **15.232***(227)(F,H,HA)*	73-82	•	**1949509580** **1949509530**	**1949505380** **1949501230** **1949501230**	410	183x17.0/11.8x178	**587017J** **587018J**	19495	8x19495	8xMP/32/2	**8162080002**	**810800J**	64	8x18x15.5-180°
15.168, **15.240***(224)*, **15.240***(226)*, **15.2***(F,H)*	73-82	•		**1723805380** **1768309530**	410	143x17.0/11.8x178	**587017J** **587018J**	17238	8x17238	8xMP/30/2	**8162080002**	**810800J**	64	8x18x15.5-180°
15.192*(540)*, **15.220***(526)*, **15.240***(524)(F,FL,H)* **15.232***(224)*, **15.232***(226)*, **15.232***(227)(F,H,HA)*	73-89	•		**1723805380** **1768309530**	410	143x17.0/11.8x178	**587017J** **587018J**	17238	8x17238	8xMP/30/2	**8162080002**	**810800J**	64	8x18x15.5-180°
15.192*(540)*, **15.220***(526)*, **15.240***(524)(F,FL,H)*	73-89	•	**1949509580** **1949509530**	**1949505380** **1949501230** **1949501230**	410	183x17.0/11.8x178	**587017J** **587018J**	19495	8x19495	8xMP/32/2	**8162080002**	**810800J**	64	8x18x15.5-180°
	73-89	•	**1949609580** **1949609530**	**1949605380** **1949601230** **1949601230**	410	223x17.0/11.8x178	**587017J** **587018J**	19496	8x19496	8xMP/36/2	**8162080003**	**810800J**	64	8x20x15.5-180°

© JURID / All rights reserved 2005

© JURID / All rights reserved 2005

MAN...

M...

16.321(F,FA,FL,H,HA,U,UL) **16.32**(F,FA,FLS,H,HA,U) **16.168**(540)(H) **16.256**(F,FL,H,HA,U) **16.28**(FL,H,HA) **16.240**(524)(FL,H) **16.291, 16.36**(F,FA) **16.281**(F,FA,FL,H,HA) **16.168, 16.240**(257), **16.240**(525)(HA) **15.24**(F,FL) **16.192**(FA,FL,H,HA)	82-89	•	**1949409580** **1949409530**	**1949405380** **1949401230** **1949401230**	410	163x17.0/11.8x178	**587017J** **587018J**	19494	8x19494	8xMP/31/2	**8162080001**	**810800J**	64	8x15x15.5-180°
16.321(F,FA,FL,H,HA,U,UL) **16.168**(540)(H) **16.192, 16.240**(524), **16.240**(525)(FL,H,HA) **16.291, 16.36**(F,FA) **16.168**(HA) **15.24**(F,FL) **16.281**(F,FA,FL,H,HA)	82-89	•	**1949609580** **1949609530**	**1949605380** **1949601230** **1949601230**	410	223x17.0/11.8x178	**587017J** **587018J**	19496	8x19496	8xMP/36/2	**8162080003**	**810800J**	64	8x20x15.5-180°
15.24(F,FL) **16.321**(F,FA,FL,H,HA,U,UL) **16.32**(F,FA,FLS,H,HA,U) **16.168**(540)(H) **16.232, 16.24, 16.2**(F,FL,FR,H,HR) **16.256**(F,FL,H,HA,U) **16.240**(524), **16.240**(525), **16.28**(FL,H,HA) **16.168**(F,FL,FR,H,HA,HR) **16.291, 16.36**(F,FA) **16.240**(256)(H,HA) **16.192**(F,FA,FL,FR,H,HA,HR) **16.281**(F,FA,FL,H,HA)	82-89	•	**1949509580** **1949509530**	**1949505380** **1949501230** **1949501230**	410	183x17.0/11.8x178	**587017J** **587018J**	19495	8x19495	8xMP/32/2	**8162080002**	**810800J**	64	8x18x15.5-180°
16.240(256)(H,HA) **16.192, 16.232, 16.24,** **16.2**(F,FL,FR,H,HR) **16.240**(257)(e) **16.168**(F,FL,FR,H,HA,HR)	82-89	•	**1949409580** **1949409530**	**1949405380** **1949401230** **1949401230**	410	163x17.0/11.8x178	**587017J** **587018J**	19494	8x19494	8xMP/31/2	**8162080001**	**810800J**	64	8x15x15.5-180°
16.192, 16.215, 16.23	71-73	•		**1741005380**	420	140x18.5/17.3x179 140x18.5/9.0x179		17410 17411	4x17410 + 4x17411	4xMP/34/1 + 4xMP/35/1	**8135100003**		56	10x18x18.5-140°(BQ/BW)
	71-73	•		**1947305380**	440	160x18.4/15.5x184 160x18.4/10.4x184		19473 19747	4x19473 + 4x19474	4xMP/25/1 + 4xMP/26/1	**8135100003**		60	10x18x18.5-140°(BQ/BW)
16.32(FA) **16.256**(e)	82-89	•		**1741005380**	420	140x18.5/17.3x179 140x18.5/9.0x179		17410 17411	4x17410 + 4x17411	4xMP/34/1 + 4xMP/35/1	**8135100003**		56	10x18x18.5-140°(BQ/BW)

© JURID / All rights reserved 2005

© JURID / All rights reserved 2005

MAN...

...

M...

16.331 *(FR)*	81-88	•		**1949409580** **1949409530**	**1949405380** **1949401230** **1949401230**	410	163x17.0/11.8x178		**587017J** **587018J**	19494	8x19494	8xMP/31/2	**8162080001**	**810800J**	64	8x15x15.5-180°
	81-88		•	**1949609580** **1949609530**	**1949605380** **1949601230** **1949601230**	410	223x17.0/11.8x178		**587017J** **587018J**	19496	8x19496	8xMP/36/2	**8162080003**	**810800J**	64	8x20x15.5-180°
16.332, 16.362 *(FLR)*	86-89	•		**1949509580** **1949509530**	**1949505380** **1949501230** **1949501230**	410	183x17.0/11.8x178		**587017J** **587018J**	19495	8x19495	8xMP/32/2	**8162080002**	**810800J**	64	8x18x15.5-180°
	86-89		•	**1949609580** **1949609530**	**1949605380** **1949601230** **1949601230**	410	223x17.0/11.8x178		**587017J** **587018J**	19496	8x19496	8xMP/36/2	**8162080003**	**810800J**	64	8x20x15.5-180°
17.136, 17.17, 17.192, 17.22, 17.241, 17.24 *(F,FA,FL,FR,H,HA)*	84-89	•		**1949409580** **1949409530**	**1949405380** **1949401230** **1949401230**	410	163x17.0/11.8x178		**587017J** **587018J**	19494	8x19494	8xMP/31/2	**8162080001**	**810800J**	64	8x15x15.5-180°
	84-89		•	**1949509580** **1949509530**	**1949505380** **1949501230** **1949501230**	410	183x17.0/11.8x178		**587017J** **587018J**	19495	8x19495	8xMP/32/2	**8162080002**	**810800J**	64	8x18x15.5-180°
	84-89		•	**1949609580** **1949609530**	**1949605380** **1949601230** **1949601230**	410	223x17.0/11.8x178		**587017J** **587018J**	19496	8x19496	8xMP/36/2	**8162080003**	**810800J**	64	8x20x15.5-180°

TG-A

26.51 *(FNLLC,FPLS,FVLS)* **26.31, 26.36, 26.41, 26.46** *(FNLC,FNLLC,FPLS,FVL-KO,FVLS)* **18.31, 18.36, 18.51** *(FC,FK,FL,FLC,FLK,FLLS,FLS)* **18.41, 18.46** *(FK,FLC,FLK,FLLC,FLLS,FLS)*	00-01	•	•	**2903004230** **2903009560**		432	250x28x118		**587003J** **587023J**	29030	4x29030						
26.51 *(FNLC,FNLLC,FPLS,FVLS)*	00-01	•	•	**2905304230**		432	250x30x118		**587003J** **587023J**	29053	4x29053						
26.31, 26.36, 26.41, 26.46 *(FNLC,FNLLC,FPLS,FVL-KO,FVLS)* **18.31, 18.36, 18.51** *(FC,FK,FL,FLC,FLK,FLLS,FLS)* **18.41, 18.46** *(FK,FLC,FLK,FLLC,FLLS,FLS)*	10/01-	•	•	**2913109560**			249.63x30x118.2			29131	4x29131						
18.31, 18.36, 18.41, 18.48, 18.51, 18.53, 24.41, 24.48, 26.31, 26.36, 26.41, 26.48	03-	•	•	**2910815390**			248x30x109			29108	4x29108						
18.41, 18.46 *(FLC,FLS)*	97-	•		**2903004230** **2903009560**		432	250x28x118	**567408J**	**587003J** **587023J**	29030	4x29030						
	97-		•	**1723805380**		410	143x17.0/11.8x178		**587017J** **587018J**	17238	8x17238	8xMP/30/2	**8162080002**	**810800J**	64	8x18x15.5-180°
18.41, 18.46 *(FLC,FLS)* **26.41, 26.46** *(FNLC)*	97-		•	**1949605380**		410	223x17.0/11.8x178		**587017J** **587018J**	19496	8x19496	8xMP/36/2	**8162080003**	**810800J**	64	8x20x15.5-180°
26.41, 26.46 *(FNLC)*	97-	•		**2903004230** **2903009560**		432	250x28x118	**567406J**	**587003J** **587023J**	29030	4x29030						
26.41, 26.46 *(FNLC +ABS)*	97-	•		**2903004230** **2903009560**		432	250x28x118	**567407J**	**587003J** **587023J**	29030	4x29030						

© JURID / All rights reserved 2005

© JURID / All rights reserved 2005

			STOCK	STOCK	⌀ mm			WVA	BFMC	JURID	SUPASET	#	

MAN...

...

U 90 (Unterflur)

26.322, 26.372, 26.422 *(UNL,UNLL)* **14.272, 19.322, 19.332, 19.362, 19.372, 19.422** *(U,UL)*	89-	•	**1949609580** **1949609530**	**1949605380** **1949601230** **1949601230**	410	223x17.0/11.8x178		**587017J** **587018J**	19496	8x19496	8xMP/36/2	**8162080003**	**810800J**	64	8x20x15.5-180°
26.322, 26.372, 26.422 *(UNL,UNLL)* **19.322, 19.332, 19.362, 19.372, 19.422** *(U,UL)*	89-	•	**1949509580** **1949509530**	**1949505380** **1949501230** **1949501230**	410	183x17.0/11.8x178		**587017J** **587018J**	19495	8x19495	8xMP/32/2	**8162080002**	**810800J**	64	8x18x15.5-180°
26.322, 26.372, 26.422 *(UNL,UNLL)*	89-	•		**1723805380**	410	143x17.0/11.8x178		**587017J** **587018J**	17238	8x17238	8xMP/30/2	**8162080002**	**810800J**	64	8x18x15.5-180°
24.262 *(DF 6x4,DFK 6x4,DFLS 6x4, DFS 6x4)*	86-94	•	**1949609580** **1949609530**	**1949605380** **1949601230** **1949601230**	410	223x17.0/11.8x178		**587017J** **587018J**	19496	8x19496	8xMP/36/2	**8162080003**	**810800J**	64	8x20x15.5-180°

JURID by Honeywell

© JURID / All rights reserved 2005

© JURID / All rights reserved 2005

JURID by Honeywell

M

332 F, FR292, FRH292, FRH362, R292	74-86	•	**1949405380**		410	163x17.0/11.8x178		**587017J** **587018J**	19494	8x19494	8xMP/31/2	**8162080001**	**810800J**	64	8x15x15.5-180°
	74-86	•	**1949605450**		410	223x17.0/11.8x178		**587017J** **587018J**	19496	8x19496	8xMP/36/2	**8162080003**	**810800J**	64	8x20x15.5-180°
CR160 *(Ikarus)*	77-	•	**1768205380** **1768209530**		410	123x17.0/11.8x178			17682	8x17682	8xMP/29/1	**8162080001**	**810800J**	64	8x15x15.5-180°
	77-	•	**1728505050**		440	140x10.0x191			17285	8x17285	8xBC/2/1	**8103080007**	**810800J**	64	8x20x15.5-180°
FR292, FRH292, FRH362, ND202, ND202F, NL202, R292, SD202, SG240, SG240F, SG242, SG242F, SG280, SG280F, SG282, SG282F, SG292, SG292F, SL200, SL202	86-	•	**1970705450** **1958109580**		410	223x17.9/7.9x219 223x18.0/15.4x174 223x19x173.66			19581 19582 19707	4x19581 + 2x19582 + 2x19707	4xMB/77/1 + 2xMB/76/1 + 2xMB/76/2	**8162080002**	**810800J**	72	8x18x15.5-180°
FR292, FRH292, FRH362, ND202, ND202F, NL202, R292, SD202, SL200, SL202, SU240, SU242, SU280, U297, UL242, UL292	86-	•	**1970605450** **1957909580**		410	163x17.9/8.0x219 163x18.0/15.4x174 163x19x173.66			19579 19580 19706	4x19579 + 2x19580 + 2x19706	4xMB/75/1 + 2xMB/74/1 + 2xMB/74/2	**8162080002**	**810800J**	72	8x18x15.5-180°
FRH352, FRH402, FRH422, RH353, RH403 *(Lions Star)*	93-	•	**2903004230** **2903009560**		438	250x28x118	**567400J**	**587003J** **587023J**	29030	4x29030					
	93-	•	**2905304230**		438	250x30x118	**567400J**	**587003J** **587023J**	29053	4x29053					
	93-	•	**2974705440** **2974709560**		438	139x32x121	**567400J**		29747	8x29747					
	93-	•	**1970705450** **1958109580**		410	223x17.9/7.9x219 223x18.0/15.4x174 223x19x173.66			19581 19582 19707	4x19581 + 2x19582 + 2x19707	4xMB/77/1 + 2xMB/76/1 + 2xMB/76/2	**8162080002**	**810800J**	72	8x18x15.5-180°
FRH	97-	•	**2903004230** **2903009560**		432	250x28x118	**567406J**	**587003J** **587023J**	29030	4x29030					
FRH *(+ABS)*	97-	•	**2903004230** **2903009560**		432	250x28x118	**567407J**	**587003J** **587023J**	29030	4x29030					
FRH	97-	•	**2903004230** **2903009560**		432	250x28x118	**567408J**	**587003J** **587023J**	29030	4x29030					
	97-	•	**2905304230**		432	250x30x118	**567406J**	**587003J** **587023J**	29053	4x29053					

MAN...

...

FRH *(+ABS)*	97-	•		**2905304230**		432	250x30x118	**567407J**		**587003J** **587023J**	29053	4x29053						
FRH	97-	•		**2905304230**		432	250x30x118	**567408J**		**587003J** **587023J**	29053	4x29053						
HQ750, SL176, SL195	66-	•		**1741015380**		420	140x19.5/18.3x179 140x19.5/10.0x179				1741008 1741108	4x1741008 + 4x1741108	4xMP/34/1 + 4xMP/35/1	**8135100003**		56	10x18x18.5-140°(BQ/BW)	
	66-		•	**1947305380**		440	160x18.4/15.5x184 160x18.4/10.4x184				19473 19747	4x19473 + 4x19474	4xMP/25/1 + 4xMP/26/1	**8135100003**		60	10x18x18.5-140°(BQ/BW)	
NG242, NG272, NG292	89-	•	•	**1970605450** **1957909580**		410	163x17.9/8.0x219 163x18.0/15.4x174 163x19x173.66				19579 19580 19706	4x19579 + 2x19580 + 2x19706	4xMB/75/1 + 2xMB/74/1 + 2xMB/74/2	**8162080002**	**810800J**	72	8x18x15.5-180°	
	89-		•	**1970705450** **1958109580**		410	223x17.9/7.9x219 223x18.0/15.4x174 223x19x173.66				19581 19582 19707	4x19581 + 2x19582 + 2x19707	4xMB/77/1 + 2xMB/76/1 + 2xMB/76/2	**8162080002**	**810800J**	72	8x18x15.5-180°	
NL263	98-	•		**2903004230** **2903009560**		432	250x28x118	**567406J**		**587003J** **587023J**	29030	4x29030						
	98-	•		**2903004230** **2903009560**		432	250x28x118	**567408J**		**587003J** **587023J**	29030	4x29030						
	98-	•		**2905304230**		432	250x30x118	**567406J**		**587003J** **587023J**	29053	4x29053						
	98-	•		**2905304230**		432	250x30x118	**567408J**		**587003J** **587023J**	29053	4x29053						
NL313	98-	•		**2903004230** **2903009560**		438	250x28x118	**567400J**		**587003J** **587023J**	29030	4x29030						
NL313 *(+ABS)*	98-	•		**2903004230** **2903009560**		432	250x28x118	**567407J**		**587003J** **587023J**	29030	4x29030						
NL313	98-	•		**2905304230**		438	250x30x118	**567400J**		**587003J** **587023J**	29053	4x29053						
NL313 *(+ABS)*	98-	•		**2905304230**		432	250x30x118	**567407J**		**587003J** **587023J**	29053	4x29053						
RN313, RN353	98-	•		**2905304230** **2903009560**			250x30x118			**587003J** **587023J**	29053	4x29053						
	98-		•	**1970705450** **1958109580**		410	223x17.9/7.9x219 223x18.0/15.4x174 223x19x173.66				19581 19582 19707	4x19581 + 2x19582 + 2x19707	4xMB/77/1 + 2xMB/76/1 + 2xMB/76/2	**8162080002**	**810800J**	72	8x18x15.5-180°	
RU240, RU280, SD200, SD200F, SD202, SD202F, SL200, SL202, SL202F, SR240, SR280, SR320, SR321, SR361	75-86		•	**1949605450**		410	223x17.0/11.8x178			**587017J** **587018J**	19496	8x19496	8xMP/36/2	**8162080003**	**810800J**	64	8x20x15.5-180°	
RU240, RU280, SR240, SR280, SR320, SR321, SR361	75-86	•		**1949405370**		410	163x17.0/11.8x178			**587017J** **587018J**	19494	8x19494	8xMP/31/2	**8162080001**	**810800J**	64	8x15x15.5-180°	
SD200, SD200F, SD202, SD202F, SL200, SL202, SL202F	75-86	•		**1949405450**		410	163x17.0/11.8x178			**587017J** **587018J**	19494	8x19494	8xMP/31/2	**8162080001**	**810800J**	64	8x15x15.5-180°	
SG192, SL160, SL750	70-81	•	•	**1741015380**		420	140x19.5/18.3x179 140x19.5/10.0x179				1741008 1741108	4x1741008 + 4x1741108	4xMP/34/1 + 4xMP/35/1	**8135100003**		56	10x18x18.5-140°(BQ/BW)	
	82-96	•		**2905503010**	**2905509560**	325	175.8x22x77	**567401J**			29055	4x29055						
	82-96	•		**2905603010**		325	175.8x23x77	**567401J**			29056	4x29056						
	70-96		•	**1947305380**		440	160x18.4/15.5x184 160x18.4/10.4x184				19473 19747	4x19473 + 4x19474	4xMP/25/1 + 4xMP/26/1	**8135100003**		60	10x18x18.5-140°(BQ/BW)	
SG192, SL160, SL750, SU210, SU230	96-	•	•	**2909103010**		330	175.6x27x85	**567402J**		**587022J**	29091	4x29091						

© JURID / All rights reserved 2005

© JURID / All rights reserved 2005

				STOCK	STOCK	⌀ mm					WVA	BFMC	JURID	SUPASET	#				

MAN…

…

SG192, SL160, SL750, SU210, SU230 *(Ⓞ : Wabco(PAN17) 17.5")*	96-	•	•		**2908809560**		330	175.6x26x85	**567402J**			29088	4x29088						
SG192, SL160, SL750, SU230 *(+ABS)*	96-	•	•	**2909103010**			330	175.6x27x85	**567405J**		**587022J**	29091	4x29091						
SG192, SL160, SL750, SU230 *(Ⓞ : Wabco(PAN17) +ABS 17.5")*	96-	•	•		**2908809560**		330	175.6x26x85	**567405J**			29088	4x29088						
SG220, SG220F, SG240, SG240F, SG242, SG242F, SG280, SG280F, SG282, SG282F, SG292	76-86	•	•		**1949405450**		410	163x17.0/11.8x178			**587017J** **587018J**	19494	8x19494	8xMP/31/2	**8162080001**	**810800J**	64	8x15x15.5-180°	
SG220, SG220F, SG240, SG240F, SG242, SG242F, SG280, SG280F, SG282, SG282F, SG292, SG292F	76-86		•		**1949605450**		410	223x17.0/11.8x178			**587017J** **587018J**	19496	8x19496	8xMP/36/2	**8162080003**	**810800J**	64	8x20x15.5-180°	
SG240, SG240F, SG242, SG242F, SG280, SG280F, SG282, SG282F, SG292, SG292F	86-	•	•		**1970605450** **1957909580**		410	163x17.9/8.0x219 163x18.0/15.4x174 163x19x173.66				19579 19580 19706	4x19579 + 2x19580 + 2x19706	4xMB/75/1 + 2xMB/74/1 + 2xMB/74/2	**8162080002**	**810800J**	72	8x18x15.5-180°	
SL200	75-86		•		**1949505380**		410	183x17.0/11.8x178			**587017J** **587018J**	19495	8x19495	8xMP/32/2	**8162080002**	**810800J**	64	8x18x15.5-180°	
SM152, SM182 *(Midi)*	95-	•	•		**1970803270**		360	183x16.3/12.7x174				19708	8x19708	8xGG/232/1	**8103080003**	**810800J**	96	8x15x15.5-180°	
	87-91	•		**1701709580**			360	143x16.3/11.3x190				17017	8x17017	8xGG/217/1	**8103080003**	**810800J**	64	8x15x15.5-180°	
	87-91	•			**1724405380**		360	143x16.3/12.6x173				17244	8x17244	8xPD/2/1	**8103080003**	**810800J**	64	8x15x15.5-180°	
	91-	•		**1701709580**			360	143x16.3/11.3x190				17017	8x17017	8xGG/217/1	**8103080003**	**810800J**	64	8x15x15.5-180°	
	91-	•			**1724405380**		360	143x16.3/12.6x173				17244	8x17244	8xPD/2/1	**8103080003**	**810800J**	64	8x15x15.5-180°	
	87-94		•	**1917709580**	**1917701230**		360	163x16.3/11.6x190				19177	8x19177	8xGG/218/1	**8103080003**	**810800J**	96	8x15x15.5-180°	
	87-94		•		**1950405380**		360	163x16.3/12.6x173				19504	8x19504	8xGG/213/1	**8103080003**	**810800J**	96	8x15x15.5-180°	
SR240, SR280	86-	•			**1970605370** **1957909580**		410	163x17.9/8.0x219 163x18.0/15.4x174 163x19x173.66				19579 19580 19706	4x19579 + 2x19580 + 2x19706	4xMB/75/1 + 2xMB/74/1 + 2xMB/74/2	**8162080002**	**810800J**	72	8x18x15.5-180°	
SR240, SR280, SU240, SU242, SU280, U297, UL242, UL292	86-		•		**1970705370** **1958109580**		410	223x17.9/7.9x219 223x18.0/15.4x174 223x19x173.66				19581 19582 19707	4x19581 + 2x19582 + 2x19707	4xMB/77/1 + 2xMB/76/1 + 2xMB/76/2	**8162080002**	**810800J**	72	8x18x15.5-180°	
SU210, SU230	75-96	•		**2905503010**	**2905509560**		325	175.8x22x77	**567401J**			29055	4x29055						
	75-96	•		**2905603010**			325	175.8x23x77	**567401J**			29056	4x29056						
	75-96	•			**1741015380**		420	140x19.5/18.3x179 140x19.5/10.0x179				1741008 1741108	4x1741008 + 4x1741108	4xMP/34/1 + 4xMP/35/1	**8135100003**		56	10x18x18.5-140°(BQ/BW)	
	75-96		•		**1947305380**		440	160x18.4/15.5x184 160x18.4/10.4x184				19473 19747	4x19473 + 4x19474	4xMP/25/1 + 4xMP/26/1	**8135100003**		60	10x18x18.5-140°(BQ/BW)	
SU240, SU242, SU280	72-86	•			**1949405450**		410	163x17.0/11.8x178			**587017J** **587018J**	19494	8x19494	8xMP/31/2	**8162080001**	**810800J**	64	8x15x15.5-180°	
	72-86		•		**1949505380**		410	183x17.0/11.8x178			**587017J** **587018J**	19495	8x19495	8xMP/32/2	**8162080002**	**810800J**	64	8x18x15.5-180°	
	72-86		•		**1949605450**		410	223x17.0/11.8x178			**587017J** **587018J**	19496	8x19496	8xMP/36/2	**8162080003**	**810800J**	64	8x20x15.5-180°	

Masso

RDS4221		•			**1936703290**		414	211x17.7/9.6x202 211x18.6/15.2x220				19367 19368	4x19367 + 4x19368		**8102060009**		96	6x18x12-180°	
W5 *(Ⓞ : Bendix)*		•			**1730703320**		406	125x10.0x346 125x10.0x284				17307 17308	2x17307 + 2x17308	2xBT/54/1 + 2xBT/55/1	**8102050009**	**810500J**	116	5x13x9.5-180°	

© JURID / All rights reserved 2005

© JURID / All rights reserved 2005

				STOCK	STOCK		mm				WVA	BFMC	JURID	SUPASET	#	

Masso...

...

W8(⊢⊣ : Colaert (O) : Bendix)		•		1940603290		414	200x17.2/19.0/15.8x252 200x15.8/19.0/11.9x345			19406 19407	2x19406 + 2x19407	2xLF/102/1 + 2xLF/103/1	8103060008		82	6x16x12-180°
⊢⊣ : BPW		•	1909409580	1909404040 1909401250		420	200x17.5/10.5x204			19094	8x19094	8xBC/97/1	8162080001	810800J	80	8x15x15.5-180°
⊢⊣ : Colaert *(V1/V1)*		•		1761203320		305	125x10.0x275			17612	4x17612		8102060004		48	6x13.5x11-180°
⊢⊣ : Colaert *(V1/V3)*		•		272125130329		305	125x13.0x272									
⊢⊣ : Colaert *(V2/V6)*		•		1940503290		305	200x12.0x141			19405	8x19405		8103080003	810800J	80	8x15x15.5-180°
(O) : Bendix		•		1951103270		414	150x17.2/19.0/15.8x252 150x15.8/19.0/11.9x345			19511 19512	2x19511 + 2x19512	2xLF/104/1 + 2xLF/105/1	8103060008		92	6x16x12-180°

Menarini

Inbus *(F140,I 210,I 330,S 250,U 210)*		•		2901605440		425	160x28x111			29016	4x29016					
Urbano	95-	•	•		2907203341 2907209561	350	169.5x19x111	567950J		29072	8x29072					
	90-	•			2901605441 2901609561		160x28x111			29016	8x29016					

Mercedes Benz

(O) : Knorr *(SB 7000)* 22.5"		•		2910815390		430	248x30x109			29108	4x29108					
MB130																
2.4D, 2.4TD	89-96	•		573108		238.5		561577J								
MB																
MB100D	87-95	•		571521J		238.5	145.5x14x59.2	561577J		20934 20573	2x20934 + 2x21573					
MB100, MB130, MB140, MB160, MB170	80-95	•		2998404611		263	166.5x17x62	567145J		29984	4x29984					
	80-95	•		571368J		263	166.5x17x62	567145J		20706 20947	2x20706 + 2x20947					
Sprinter																
208D, 212TD, 214*(2.5t,2.8t)* 210DTdi*(2.8t)*	03/95-	•		571846J		258	141.3x17.3x50	567771J	587010J	21621 21622	2x21621 + 2x21622					
208D, 212TD, 214*(2.5t,2.8t)* 308D, 310Tdi, 312TD, 314 210DTdi*(2.8t)*	03/95-	•		571844J		276	156.5x20.7x64.8	567760J	587010J	21576 21577	2x21576 + 2x21577					

JURID by Honeywell
© JURID / All rights reserved 2005
© JURID / All rights reserved 2005
JURID by Honeywell

Mercedes Benz...

Sprinter...

208D, 212TD, 214, 308D, 312TD, 314, 408D, 412TD, 414	96-	•		**571950J**		272	125.7x19x62.6	**567761J**			23021	4x23021					
	96-	•		**571950J**		258	125.7x19x62.6	**567771J**			23021	4x23021					
308D, 312TD, 314	03/95-	•		**571910J**		272	156.3x18.8x54.8	**567761J**		**587010J**	21592	4x21592					
408CDI, 411CDI, 413CDI, 416CDI	00-		•	**2907604530** **2907609560**		276	164.8x20x73	**569122J**			29076	4x29076					
	00-	•		**571950J**		272	125.7x19x62.6	**567761J**			23021	4x23021					
	00-	•		**571950J**		258	125.7x19x62.6	**567771J**			23021	4x23021					
	00-	•		**571950J**		258	125.7x19x62.6	**569120J**			23021	4x23021					
	00-	•		**571950J**		272	125.7x19x62.6	**569121J**			23021	4x23021					
408D, 410DTdi, 412TD, 414	03/95-		•	**2907604530** **2907609560**		276	164.8x20x73	**567760J**		**587010J**	29076	4x29076					
	03/95-	•		**2907604530** **2907609560**		272	164.8x20x73	**567761J**		**587010J**	29076	4x29076					
408D, 410D, 412D, 414, 415, 512D	03/95-	•		**2907604530** **2907609560**		285	164.8x20x73	**567810J**		**587010J**	29076	4x29076					

T 1

207D, 208, 208D, 209D, 210	77-95	•		**1101905460**		230	34.5x8.0x175 34.5x8.0x208 34.5x8.5x208			**587006J**	11582 11019 11025	2x11582 + 1x11019 + 1x11025	2xMB/90/1 + MB/91/2 + MB/91/3	**8102040003**	**810400J**	44	4x10x7.5-180°
207D, 208, 208D, 209D, 210, 307D, 308, 308D, 309D, 310, 310D	77-95		•	**571272J**		280	149x17.8x69	**561135J**		**581304J**	20784	4x20784					
307D, 308, 308D, 309D, 310D	77-95	•		**1302005460**		260	54x8.0x201 54x8.0x233			**587006J**	13532 13020	2x13532 + 2x13020	2xMB/88/1 + 2xMB/89/2	**8102040003**	**810400J**	52	4x10x7.5-180°
406, L407, L408, L409, L410, L508 *(D,DG,L,LF,LK)*	65-82		•	**1534995460** **1534909530**		300	68x9.0x244 68x10.2x286				15349 15350	2x15349 + 2x15350	2xMB/70/1 + 2xMB/69/1	**8103060003**	**810600J**	52	6x12x11.5-180°
	65-82	•		**1534995460** **1534909530**		300	68x9.0x244 68x10.2x286				15349 15350	2x15349 + 2x15350	2xMB/70/1 + 2xMB/69/1	**8103060003**	**810600J**	52	6x12x11.5-180°
407D, 408D, 409D, 410, 410D, 507D, 508D, 510, L410	82-95	•		**571272J**		280	149x17.8x69	**561135J**		**581304J**	20784	4x20784					
407D, 409D, 410, 410D, 507D, 508D, 510, 510D, L410	82-95		•	**1503005460**		270	79.5x8.0x210 79.5x8.0x243			**587006J**	15742 15030	2x15742 + 2x15030	2xMB/80/1 + 2xMB/81/3	**8102050003**	**810500J**	52	5x10x9.5-180°
410, 410D, 507D, 508D, 510, 510D, L410	82-95	•		**571272J**		280	149x17.8x69	**561854J**		**581304J**	20784	4x20784					
L206D, L207, L306D, L307D	73-77	•		**1503005460**		270	79.5x8.0x210 79.5x8.0x243			**587006J**	15742 15030	2x15742 + 2x15030	2xMB/80/1 + 2xMB/81/3	**8102050003**	**810500J**	52	5x10x9.5-180°
	73-77		•	**1314105910**		230	50x4.9x211				13141	4x13141	4xDK/17/1	**8102040003**	**810400J**	40	4x10x7.5-180°
L206D, L306D	70-73	•	•	**1314105910**		230	50x4.9x211				13141	4x13141	4xDK/17/1	**8102040003**	**810400J**	40	4x10x7.5-180°

JURID by Honeywell
© JURID / All rights reserved 2005

© JURID / All rights reserved 2005

Mercedes Benz...

T 1...

L508, L608 *(D,DG,LF,LK)*	68-78	•		**1558005460**		300	98x10.2x244 98x10.2x286			15580 15581	2x15580 + 2x15581	2xMB/94/1 + 2xMB/95/1	**8103060003**	**810600J**	52	6x12x11.5-180°
	68-78	•		**1558035460**		304	98x12.2x244 98x12.2x286			1558020 1558021	2x1558020 + 2x1558120	2xMB/94/1 + 2xMB/95/1	**8103060003**	**810600J**	52	6x12x11.5-180°
	68-78	•		**1740925380**		304	135x12.5x248			17409	4x17409	4xMB/93/1	**8103080003**	**810800J**	40	8x15x15.5-180°
	68-78		•	**1558005460**		300	98x10.2x244 98x10.2x286			15580 15581	2x15580 + 2x15581	2xMB/94/1 + 2xMB/95/1	**8103060003**	**810600J**	52	6x12x11.5-180°
	68-78		•	**1558035460**		304	98x12.2x244 98x12.2x286			1558020 1558021	2x1558020 + 2x1558120	2xMB/94/1 + 2xMB/95/1	**8103060003**	**810600J**	52	6x12x11.5-180°
	68-78		•	**1740925380**		304	135x12.5x248			17409	4x17409	4xMB/93/1	**8103080003**	**810800J**	40	8x15x15.5-180°

Vario Plus

512D	08/96-	•		**2983505440** **2983509560**		285	175x22x85.5	**567810J**	**587004J** **581306J**	29835	4x29835				
512D, 612D, 812D	08/96-	•		**2983505440** **2983509560**		304	175x22x85.5	**567770J**	**587004J** **581306J**	29835	4x29835				
612D, 812D	08/96-		•	**2983505440** **2983509560**		304	175x22x85.5	**567769J**	**587004J** **581306J**	29835	4x29835				
614D, 814D, 815	08/96-	•		**2983505440** **2983509560**		324	175x22x85.5	**567762J**	**587004J** **581306J**	29835	4x29835				
	08/96-		•	**2983505440** **2983509560**		324	175x22x85.5	**567763J**	**587004J** **581306J**	29835	4x29835				
	08/96-		•	**2983505440** **2983509560**		324	175x22x85.5	**569112J**	**587004J** **581306J**	29835	4x29835				
810DT, 812D, 814DA, 815	08/96-	•		**2983505440** **2983509560**		324	175x22x85.5	**567776J**	**587004J** **581306J**	29835	4x29835				

Vito

638 *(108D (O) : Teves,110D (O) : Teves,* *113 (O) : Teves,114 (O) : Teves,* *V230 (O) : Teves)*	96-	•		**571844J**		276	156.5x20.7x64.8	**562054J**	**587010J**	21576 21577	2x21576 + 2x21577				
638 *(108D (O) : Bosch,* *110D (O) : Bosch,* *113 (O) : Bosch,* *114 (O) : Bosch,* *V230 (O) : Bosch)*	96-	•		**571946J**		276	134.3x21x64.3	**562054J**		23022	4x23022				
638 *(108D (O) : Teves,110D (O) : Teves,* *113 (O) : Teves,114 (O) : Teves,* *V230 (O) : Teves)*	96-		•	**571845J**		280	63.7x16.9x57.4	**562065J**		21904	4x21904				
638 *(108D (O) : Bosch,* *110D (O) : Bosch,* *113 (O) : Bosch,114 (O) : Bosch,* *V230 (O) : Bosch)*	96-		•	**571947J**		280	111.1x18x56.1	**562065J**		23020	4x23020				

© JURID / All rights reserved 2005

© JURID / All rights reserved 2005

Mercedes Benz...

Actros

1853, 1857, 2053 *(L 4x2,L 4x4,LS 4x2,LS 4x4,S 4x2, S 4x4)* **3231, 3235, 3240, 3243** *(B 8x4,B 8x8,K 8x4,K 8x8)* **Econic** *(1823,1828,2628L)* **3331, 3335, 3340, 3343, 3348, 3353, 3357** *(B 6x2,K 6x2,S 6x2)* **4140, 4143** *(B 8x4,B 8x8)* **1831, 1835, 1840, 1843, 1848, 2031, 2035, 2040** *(K 4x2,K 4x4,L 4x2,L 4x4,LS 4x2, LS 4x4,S 4x2,S 4x4)* **2631, 2635, 2640, 2643, 2648, 2653, 2657** *(B 6x2,K 6x2,L 6x2,LK 6x2,LS 6x2, S 6x2)* **2531, 2535, 2540, 2543, 2548, 2553, 2557** *(L 6x2,LS 6x2)*	96-	•	•	**2910815390**		430	248x30x109	**567751J**			29108	4x29108					
1853, 1857, 2053 *(L 4x2,L 4x4,LS 4x2,LS 4x4,S 4x2, S 4x4)* **3231, 3235, 3240, 3243, 4148** *(B 8x4,B 8x8,K 8x4,K 8x8)* **2631, 2635, 2640, 2643, 2648, 2653, 2657** *(B 6x4,K 6x4,LK 6x4)* **3335** *(B 6x2,K 6x2,S 6x2)* **2531, 2540, 2543, 2548, 2553** *(L 6x2,L 6x4,LS 6x2,LS 6x4)* **3331, 3340, 3343, 3348, 3353, 3357** *(A 6x4,AK 6x4,AS 6x4,B 6x2, K 6x2,S 6x2)* **4140, 4143** *(AK 8x4,AK 8x8,B 8x4,B 8x8, K 8x4,K 8x8)* **1831, 1835, 1840, 1843, 1848, 2031, 2035, 2040** *(A 4x2,A 4x4,AK 4x2,AK 4x4, AS 4x2,AS 4x4,K 4x2,K 4x4,L 4x2, L 4x4,LS 4x2,LS 4x4,S 4x2,S 4x4)*	96-	•		**1949509580** **1949509530**	**1949505050** **1949501230** **1949501230**	410	183x17.0/11.8x178	**587009J** **587008J**			19495	8x19495	8xMP/32/2	**8162080002**	**810800J**	64		8x18x15.5-180°

© JURID / All rights reserved 2005

© JURID / All rights reserved 2005

Mercedes Benz...

Actros...

1853, 1857, 2053 *(L 4x2,L 4x4,LS 4x2,LS 4x4,S 4x2, S 4x4)*	96-	•	**1949409580** **1949409530**	**1949405050** **1949401230** **1949401230**		410	163x17.0/11.8x178		**587009J** **587008J**	19494	8x19494	8xMP/31/2	**8162080001**	**810800J**	64	8x15x15.5-180°
3231, 3235, 3240, 3243 *(B 8x4,B 8x8,K 8x4,K 8x8)* **3331, 3335, 3340, 3343, 3348, 3353, 3357** *(A 6x2,A 6x4,AK 6x2,AK 6x4, AS 6x2,AS 6x4,B 6x2,B 6x4,K 6x2, K 6x4,S 6x2,S 6x4)* **4140, 4143, 4148** *(AK 8x4,AK 8x8,B 8x4,B 8x8, K 8x4,K 8x8)* **1831, 1835, 1840, 1843, 1848, 2031, 2035, 2040** *(A 4x2,A 4x4,AK 4x2,AK 4x4, AS 4x2,AS 4x4,K 4x2,K 4x4,L 4x2, L 4x4,LS 4x2,LS 4x4,S 4x2,S 4x4)* **2631, 2635, 2640, 2643, 2648, 2653, 2657** *(B 6x2,B 6x4,K 6x2,K 6x4,L 6x2, L 6x4,LK 6x2,LK 6x4,LS 6x2, LS 6x4,S 6x2,S 6x4)*	96-	•	**1949609580** **1949609530**	**1949605050** **1949601230** **1949601230**		410	223x17.0/11.8x178		**587009J** **587008J**	19496	8x19496	8xMP/36/2	**8162080003**	**810800J**	64	8x20x15.5-180°
BOM *(4x4,6x6)*	97-	• •	**1949509580** **1949509530**	**1949505050**		410	183x17.0/11.8x178		**587009J** **587008J**	19495	8x19495	8xMP/32/2	**8162080002**	**810800J**	64	8x18x15.5-180°
	97-	•	**1949609580** **1949609530**	**1949605050**		410	223x17.0/11.8x178		**587009J** **587008J**	19496	8x19496	8xMP/36/2	**8162080003**	**810800J**	64	8x20x15.5-180°
BOM *(4x2,6x2,6x2/4,6x4)*	97-	•		**2910815390**	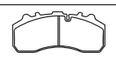	430	248x30x109	**567751J**		29108	4x29108					
BOM *(6x2,6x2/4,6x4)*	97-	•	**1949509580** **1949509530**	**1949505050**		410	183x17.0/11.8x178		**587009J** **587008J**	19495	8x19495	8xMP/32/2	**8162080002**	**810800J**	64	8x18x15.5-180°
BOM *(4x2,6x2,6x2/4,6x4)*	97-	•	**1949609580** **1949609530**	**1949605050**		410	223x17.0/11.8x178		**587009J** **587008J**	19496	8x19496	8xMP/36/2	**8162080003**	**810800J**	64	8x20x15.5-180°
mixer *(Mixer)*	97-	• •		**2910815390**	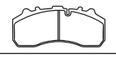	430	248x30x109	**567751J**		29108	4x29108					

Atego

1017 *(A)*	98-	•		**1729005380**		360	130x13.5/8.0x174 130x15.5/13.3x131 132.7x13.47x130.55		**587009J** **587008J**	17290 17949 17950	2x17290 + 2x17949 + 4x17950	2xMB/111/2 + 2xMB/111/1 + 4xMB/112/1	**8162080001**	**810800J**	56	8x15x15.5-180°
1214, 1215, 1217, 1223, 1225, 1228, 1317, 1323, 1325, 1328, 1517, 1523 *(F,K,KO,L,LS,N,NL)* **1528** *(AF,F,L)* **1017, 1023, 917, 923, 925** *(K,KO)*	98-	•		**2909305390**		377	210.7x30x92.5	**567766J**		29093	4x29093					

JURID by Honeywell © JURID / All rights reserved 2005

© JURID / All rights reserved 2005

JURID by Honeywell

Mercedes Benz...

Atego...

1214*(AF,F,K,L)* **1528** **1017, 1023, 917, 923, 925***(K)* **1215, 1217, 1223, 1225, 1228, 1317, 1323, 1325, 1328, 1517, 1523***(AF,F,K,L)*	98-	•		**1950625380**		364	160x15.1/9.6x173.6 160x13.5/11.3x130.6 162.7x13.45x173.56		**587008J**	19506 19844 19845	2x19506 + 2x19844 + 19845	2xMB/114/2 + 2xMB/113/1 + 4xMB/114/1	**8162080001**	**810800J**	56	8x15x15.5-180°
1214, 1215, 1217, 1223, 1225, 1228, 1317, 1323, 1325, 1328, 1517, 1523*(AF,F,K,L)* **1017, 1023, 917, 923, 925***(K)*	98-	•		**1907825380**		364	200x15.5/10.0x173.6 200x15.95x130.55 200x15.37x173.5		**587008J**	19078 19112 19505	2x19078 + 19112 + 2x19505	2xMB/120/1 + 4xMB/121/1 + 2xMB/120/2	**8162080001**	**810800J**	56	8x15x15.5-180°
812, 814, 817, 823*(F,K,L)* **1017***(A,K,KO,L,N,NL)* **1023, 917, 923, 925***(K,KO,L,N,NL)* **712, 714, 715, 717***(K,L,R,RL)*	98-	•		**2911509100**		335	173.6x27x84	**567764J**		29115	4x29115							
812, 814, 817, 823*(F,K,L)* **815***(K,L,R,RL)* **1017, 1023, 917, 923, 925***(K,KO,L,N,NL)*	98-	•		**2911509100**		335	173.6x27x84	**567768J**		29115	4x29115							
812, 814, 817, 823*(F,K,L)* **1017, 1023, 917, 923, 925***(K,KO,L,N,NL)*	98-	•		**2911509100**		335	173.6x27x84	**567767J**		29115	4x29115							
1017, 1023, 917, 923, 925*(K)*	98-	•		**1729035380**		364	130x15.5/10.0x174 130x15.5/13.3x131 132.7x13.47x130.55		**587009J** **587008J**	17290 17949 17950	2x17290 + 2x17949 + 4x17950	2xMB/111/2 + 2xMB/111/1 + 4xMB/112/1	**8162080001**	**810800J**	56	8x15x15.5-180°
1214, 1215, 1217, 1223, 1225, 1228, 1317, 1323, 1325, 1328, 1517, 1523*(F 4x4,K 4x4,KO 4x4,L 4x4, LS 4x4,N 4x4,NL 4x4)*	98-	•		**19494053380**		410			**587009J** **587008J**									
1214, 1215, 1217, 1223, 1225, 1228, 1317, 1323, 1325, 1328, 1517, 1523*(F,K,KO,L,LS,N,NL)* **1528***(AF,F,L)*	98-	•		**2909305390**		377	210.7x30x92.5	**567765J**		29093	4x29093							
1215, 1217, 1223, 1225, 1228, 1317, 1323, 1325, 1328, 1517, 1523, 1528	98-	•	**1949409580** **1949409530**	**1949405050** **1949401230** **1949401230**		410	163x17.0/11.8x178		**587009J** **587008J**	19494	8x19494	8xMP/31/2	**8162080001**	**810800J**	64	8x15x15.5-180°
1823, 1828, 2523, 2528, 2628*(A,AK,B,K,L,LS)*	98-	•		**1949515390**						19495	8x19495	8xMP/32/2				
	98-	•		**1949615390**						19496	8x19496	8xMP/36/2				
1823, 2528, 2628*(A,AK,B,K,L,LS)*	98-	• •		**2910815390**		430	248x30x109	**567751J**		29108	4x29108					
1828, 2523*(A,AK,B,K,L,LS)*	05/98-	• •		**2910815390**		430	248x30x109	**567751J**		29108	4x29108					
915, 917, 925*(AF)*	98-	• •		**1729035380**		364	130x15.5/10.0x174 130x15.5/13.3x131 132.7x13.47x130.55		**587009J** **587008J**	17290 17949 17950	2x17290 + 2x17949 + 4x17950	2xMB/111/2 + 2xMB/111/1 + 4xMB/112/1	**8162080001**	**810800J**	56	8x15x15.5-180°
7.5t		•				330		**569108J**								

© JURID / All rights reserved 2005

© JURID / All rights reserved 2005

Mercedes Benz...

...

Axor																	
1835, 1840, 1842*(LS)*	01/02-	•		**2910815390**		430	248x30x109	**567751J**		29108	4x29108						
	01/02-		•	**2910815390**		430	248x30x109	**567751J**		29108	4x29108						
Econic																	
1823, 1828, 2628*(LL)*	03/98-	•		**2910815390**			248x30x109			29108	4x29108						
	03/98-		•	**2910815390**			248x30x109			29108	4x29108						
LK																	
1013*(K,S)*	76-86	•	•	**1773905380** **1773909530**		410	103x17.0/11.8x178			17739	8x17739		**8162080001**	**810800J**	64	8x15x15.5-180°	
1013*(LP,LPF,LPK,LPKO,LPS)*	67-86	•		**1729705380**		418	100x15.3x213			17297	8x17297	8xMB/67/1	**8103080003**	**810800J**	64	8x15x15.5-180°	
	67-86		•	**1729805380**		418	120x15.0x213			17298	8x17298	8xMB/68/1	**8103080003**	**810800J**	64	8x15x15.5-180°	
1017, 1019*(F,K,KO,LS,S)* **1013***(K,KO,S)*	82-85	•		**1791505380**		410	123x17.0/12.9x178			17915	8x17915		**8162080002**	**810800J**	64	8x18x15.5-180°	
1013*(A,AK,K,KO,S)* **1017, 1019** *(A,AF,AK,AS,F,K,KO,LS,S)*	82-85		•	**1723805380** **1768309530**		410	143x17.0/11.8x178		**587009J** **587008J**	17238	8x17238	8xMP/30/2	**8162080002**	**810800J**	64	8x18x15.5-180°	
1017, 1019*(A,AF,AK,AS,F,K,KO,S)* **1013***(A,AK,K,KO,S)*	82-85		•	**1791505380**		410	123x17.0/12.9x178			17915	8x17915		**8162080002**	**810800J**	64	8x18x15.5-180°	
1017, 1019*(A,AF,AK,AS,F,K,KO,S)* **1213***(A,AK,AKO,AS,K,KO,S)* **1013***(A,AK,K,KO,S)* **1217***(A,AK,AS,K,KO,L,LS,S)*	76-82		•	**1768205380** **1768209530**		410	123x17.0/11.8x178			17682	8x17682	8xMP/29/1	**8162080001**	**810800J**	64	8x15x15.5-180°	
1228*(F)* **1219***(F,K,S)* **1217***(A,AK,AS,K,KO,L,LS,S)* **1013, 1213***(K,KO,S)* **1017, 1019** *(A,AF,AK,AS,F,K,KO,LS,S)* **1222***(F,L,S)*	76-82	•		**1768205380** **1768209530**		410	123x17.0/11.8x178			17682	8x17682	8xMP/29/1	**8162080001**	**810800J**	64	8x15x15.5-180°	
1013, 1113*(LP,LPK,LPL)*	79-86	•		**1740925380**		304	135x12.5x248			17409	4x17409	4xMB/93/1	**8103080003**	**810800J**	40	8x15x15.5-180°	
811, 813*(LP,LPK,LPL,LPO,LPS)* **913***(LP,LPK,LPL,LPS)*	79-86		•	**1740925380**		304	135x12.5x248			17409	4x17409	4xMB/93/1	**8103080003**	**810800J**	40	8x15x15.5-180°	
1013*(LP,LPK,LPL)*	67-79	•		**1740995380**		300	135x10.3x248			17409	4x17409	4xMB/93/1	**8103080003**	**810800J**	40	8x15x15.5-180°	
811, 813*(LP,LPK,LPL,LPO,LPS)* **913***(LP,LPK,LPL,LPS)*	67-79		•	**1740995380**		300	135x10.3x248			17409	4x17409	4xMB/93/1	**8103080003**	**810800J**	40	8x15x15.5-180°	
1017, 1019*(A,AF,AK,AS,F,K,KO,S)*	76-82		•	**1723805380** **1768309530**		410	143x17.0/11.8x178		**587009J** **587008J**	17238	8x17238	8xMP/30/2	**8162080002**	**810800J**	64	8x18x15.5-180°	
1017, 1019*(S)*	82-85		•	**1949409580** **1949409530**	**1949405050** **1949401230** **1949401230**	410	163x17.0/11.8x178		**587009J** **587008J**	19494	8x19494	8xMP/31/2	**8162080001**	**810800J**	64	8x15x15.5-180°	
1017, 1019*(LS)*	82-85		•	**1949509580** **1949509530**	**1949505050** **1949501230** **1949501230**	410	183x17.0/11.8x178		**587009J** **587008J**	19495	8x19495	8xMP/32/2	**8162080002**	**810800J**	64	8x18x15.5-180°	

JURID by Honeywell

© JURID / All rights reserved 2005

© JURID / All rights reserved 2005

JURID by Honeywell

Mercedes Benz...

LK...

1113*(B,L,LA,LF,LK,LKO,LP,LS)*	67-79	•		**1729705380**	418	100x15.3x213		17297	8x17297	8xMB/67/1	**8103080003**	**810800J**	64	8x15x15.5-180°
	67-79		•	**1729805380**	418	120x15.0x213		17298	8x17298	8xMB/68/1	**8103080003**	**810800J**	64	8x15x15.5-180°
1213*(A,AK,AKO,AS)*	76-86	•		**1791505380**	410	123x17.0/12.9x178		17915	8x17915		**8162080002**	**810800J**	64	8x18x15.5-180°
1213, 1216, 1313, 1317, 1319 *(LP,LPK,LPKO,LPS)*	67-83	•		**1729805380**	418	120x15.0x213		17298	8x17298	8xMB/68/1	**8103080003**	**810800J**	64	8x15x15.5-180°
	67-83		•	**1710505380** **1710509530**	418	140x15.7x213		17105	8x17105	8xMB/65/1	**8103080003**	**810800J**	64	8x15x15.5-180°
1213*(A,AK,AKO,AS,K,KO,S)* **1217***(A,AK,AS,K,KO,L,LS,S)*	82-86		•	**1791505380**	410	123x17.0/12.9x178		17915	8x17915		**8162080002**	**810800J**	64	8x18x15.5-180°
1219*(A,AF,AK,F,K,S)* **1217***(A,AK,AS,K,KO,L,LS,S)* **1213***(A,AK,AKO,AS)*	76-86	•		**1723805380** **1768309530**	410	143x17.0/11.8x178	**587009J** **587008J**	17238	8x17238	8xMP/30/2	**8162080002**	**810800J**	64	8x18x15.5-180°
1219*(A,AF,AK,F,K,S)* **1213***(A,AK,AKO,AS,K,KO,S)* **1217***(A,AK,AS,K,KO,L,LS,S)*	76-86		•	**1723805380** **1768309530**	410	143x17.0/11.8x178	**587009J** **587008J**	17238	8x17238	8xMP/30/2	**8162080002**	**810800J**	64	8x18x15.5-180°
1213*(K,KO,S)* **1219***(F,K,S)* **1222***(F,L,S)* **1228***(F)* **1217***(A,AK,AS,K,KO,L,LS,S)*	82-86	•		**1791505380**	410	123x17.0/12.9x178		17915	8x17915		**8162080002**	**810800J**	64	8x18x15.5-180°
1214*(A)*	76-88	•	•	**1723805380** **1768309530**	410	143x17.0/11.8x178	**587009J** **587008J**	17238	8x17238	8xMP/30/2	**8162080002**	**810800J**	64	8x18x15.5-180°
1219*(F,K,S)* **1226***(A,AF)* **1225, 1231***(AF)* **1227, 1234***(A,AF,LAF)* **1224, 1228***(AF,F)* **1222***(AF,F,L,LA,LS,S)*	76-86		•	**1949409580** **1949409530**	**1949405050** **1949401230** **1949401230**	410	163x17.0/11.8x178	**587009J** **587008J**	19494	8x19494	8xMP/31/2	**8162080001**	**810800J**	64	8x15x15.5-180°
1222*(AF,F,L,LA,S)* **1245***(A)* **1219***(K)* **1227, 1234***(AF,LAF)* **1224, 1228***(F)*	76-86	•		**1949409580** **1949409530**	**1949405050** **1949401230** **1949401230**	410	163x17.0/11.8x178	**587009J** **587008J**	19494	8x19494	8xMP/31/2	**8162080001**	**810800J**	64	8x15x15.5-180°
1222*(A,AF,LA)*	76-86		•		**1949605050**	410	223x17.0/11.8x178	**587009J** **587008J**	19496	8x19496	8xMP/36/2	**8162080003**	**810800J**	64	8x20x15.5-180°
1222*(A,AF,AS,F,L,LA,LS,S)* **1224, 1228***(AF,F)* **1226, 1227, 1234***(A,AF)* **1225, 1231***(AF)*	76-88	•			**1723805380** **1768309530**	410	143x17.0/11.8x178	**587009J** **587008J**	17238	8x17238	8xMP/30/2	**8162080002**	**810800J**	64	8x18x15.5-180°
1224, 1228*(AF,F)* **1226, 1227, 1234***(A,AF)* **1222***(A,AF,AS,D,F,L,LA,LS,S)* **1225, 1231***(AF)*	76-88		•		**1723805380** **1768309530**	410	143x17.0/11.8x178	**587009J** **587008J**	17238	8x17238	8xMP/30/2	**8162080002**	**810800J**	64	8x18x15.5-180°

© JURID / All rights reserved 2005

© JURID / All rights reserved 2005

Mercedes Benz...

LK...

1245*(A)* **1227, 1234***(A,AF,LAF)* **1226***(A,AF)* **1231***(AF)* **1224***(AF,F)* **1222***(A,AF,LA)*	76-86		•	**1949509580** **1949509530**	**1949505050** **1949501230** **1949501230**	410	183x17.0/11.8x178	**587009J** **587008J**	19495	8x19495	8xMP/32/2	**8162080002**	**810800J**	64	8x18x15.5-180°
1245*(A)* **1224***(AF,F)* **1227, 1234***(A,AF,LAF)* **1226***(A,AF)* **1231***(AF)*	76-86		•	**1949609580** **1949609530**	**1949605050** **1949601230** **1949601230**	410	223x17.0/11.8x178	**587009J** **587008J**	19496	8x19496	8xMP/36/2	**8162080003**	**810800J**	64	8x20x15.5-180°
1317*(L,LK,LP,LPK)*	76-83	•	•	**1949409580** **1949409530**	**1949405050** **1949401230** **1949401230**	410	163x17.0/11.8x178	**587009J** **587008J**	19494	8x19494	8xMP/31/2	**8162080001**	**810800J**	64	8x15x15.5-180°
608*(LP,LPK,LPL,LPO,LPS)*	65-77	•			**1505705380**	300	90x10.6x248		15057	4x15057	4xMB/64/1	**8103080003**	**810800J**	40	8x15x15.5-180°
	65-77	•			**1740995380**	300	135x10.3x248		17409	4x17409	4xMB/93/1	**8103080003**	**810800J**	40	8x15x15.5-180°
	65-77		•		**1505705380**	300	90x10.6x248		15057	4x15057	4xMB/64/1	**8103080003**	**810800J**	40	8x15x15.5-180°
709*(LP,LPK,LPL,LPO,LPS)*	77-86	•			**1505705380**	300	90x10.6x248		15057	4x15057	4xMB/64/1	**8103080003**	**810800J**	40	8x15x15.5-180°
	77-86	•			**1740995380**	300	135x10.3x248		17409	4x17409	4xMB/93/1	**8103080003**	**810800J**	40	8x15x15.5-180°
	77-86		•		**1505705380**	300	90x10.6x248		15057	4x15057	4xMB/64/1	**8103080003**	**810800J**	40	8x15x15.5-180°
808, 809*(LP,LPK,LPL,LPO,LPS)*	67-83	•			**1740995380**	300	135x10.3x248		17409	4x17409	4xMB/93/1	**8103080003**	**810800J**	40	8x15x15.5-180°
	67-83		•		**1740995380**	300	135x10.3x248		17409	4x17409	4xMB/93/1	**8103080003**	**810800J**	40	8x15x15.5-180°
810*(LP,LPK,LPL,LPS)*	65-83	•	•		**1727805380**	304	105x11.5/7.2x259 105x10.56x259.13	**587009J** **587008J**	17278 17927	2x17278 + 2x17927	2xMB/109/2 + 2xMB/109/1	**8162080001**	**810800J**	40	8x15x15.5-180°
911B	69-	•			**1729705380**	418	100x15.3x213		17297	8x17297	8xMB/67/1	**8103080003**	**810800J**	64	8x15x15.5-180°
	69-		•		**1729805380**	418	120x15.0x213		17298	8x17298	8xMB/68/1	**8103080003**	**810800J**	64	8x15x15.5-180°
L613D	78-86	•			**1558035460**	304	98x12.2x244 98x12.2x286		1558020 1558021	2x1558020 + 2x1558120	2xMB/94/1 + 2xMB/95/1	**8103060003**	**810600J**	52	6x12x11.5-180°
	78-86	•			**1740925380**	304	135x12.5x248		17409	4x17409	4xMB/93/1	**8103080003**	**810800J**	40	8x15x15.5-180°
	78-86		•		**1558035460**	304	98x12.2x244 98x12.2x286		1558020 1558021	2x1558020 + 2x1558120	2xMB/94/1 + 2xMB/95/1	**8103060003**	**810600J**	52	6x12x11.5-180°
	78-86		•		**1740925380**	304	135x12.5x248		17409	4x17409	4xMB/93/1	**8103080003**	**810800J**	40	8x15x15.5-180°

LN 2 / Cityliner

1114, 1117*(A,AK,K,L,S)*	84-88	•	•		**1729005380**	360	130x13.5/8.0x174 130x15.5/13.3x131 132.7x13.47x130.55	**587009J** **587008J**	17290 17949 17950	2x17290 + 2x17949 + 4x17950	2xMB/111/2 + 2xMB/111/1 + 4xMB/112/1	**8162080001**	**810800J**	56	8x15x15.5-180°
1120, 1124, 1221*(A,AF,F,L,LS,S)* **1114, 1117***(A,AK,K,L,S)*	89-	•	•		**1729035380**	364	130x15.5/10.0x174 130x15.5/13.3x131 132.7x13.47x130.55	**587009J** **587008J**	17290 17949 17950	2x17290 + 2x17949 + 4x17950	2xMB/111/2 + 2xMB/111/1 + 4xMB/112/1	**8162080001**	**810800J**	56	8x15x15.5-180°
1120, 1124, 1221*(A,AF,F,L,LS,S)* **1114, 1117***(A,AK,E,K,L,S)* **2020***(L)* **1314, 1317, 1320, 1324***(AK,K,KO,L,LS,S)*	89-	•	•		**1950625380**	364	160x15.1/9.6x173.6 160x13.5/11.3x130.6 162.7x13.45x173.56	**587008J**	19506 19844 19845	2x19506 + 2x19844 + 19845	2xMB/114/2 + 2xMB/113/1 + 4xMB/114/1	**8162080001**	**810800J**	56	8x15x15.5-180°
1114, 1117*(E)* **1314, 1317, 1320, 1324***(AK,K,KO,L,LS,S)*	84-88	•	•		**1950605380**	360	160x13.5/8.0x173.6 160x13.5/11.3x130.6 162.7x13.45x173.56	**587008J**	19506 19844 19845	2x19506 + 2x19844 + 19845	2xMB/114/2 + 2xMB/113/1 + 4xMB/114/1	**8162080001**	**810800J**	56	8x15x15.5-180°

© JURID / All rights reserved 2005

© JURID / All rights reserved 2005

Mercedes Benz...

...

LN 2 / Cityliner...

1120, 1124*(AF,F,S)*	89-	•			**1907825380**	364	200x15.5/10.0x173.6 200x15.95x130.55 200x15.37x173.5	**587008J**	19078 19112 19505	2x19078 + 19112 + 2x19505	2xMB/120/1 + 4xMB/121/1 + 2xMB/120/2	**8162080001**	**810800J**	56	8x15x15.5-180°
1214, 1220	94-	•	•		**1950625380**	364	160x15.1/9.6x173.6 160x13.5/11.3x130.6 162.7x13.45x173.56	**587008J**	19506 19844 19845	2x19506 + 2x19844 + 19845	2xMB/114/2 + 2xMB/113/1 + 4xMB/114/1	**8162080001**	**810800J**	56	8x15x15.5-180°
1317, 1324*(AK)*	84-		•		**1735005460**	300	102.2x9.3x237 102.2x9.3x269	**587005J**	17973 17350	2x17973 + 2x17350	2xMB/100/1 + 2xMB/101/2	**8103060002**	**810600J**	52	6x10x11.5-180°
1514, 1517, 1520, 1524*(K,L,LS,S)* **2020***(L)*	89-	•	•		**1907825380**	364	200x15.5/10.0x173.6 200x15.95x130.55 200x15.37x173.5	**587008J**	19078 19112 19505	2x19078 + 19112 + 2x19505	2xMB/120/1 + 4xMB/121/1 + 2xMB/120/2	**8162080001**	**810800J**	56	8x15x15.5-180°
1524*(L)*	89-	•		**1949509580** **1949509530**	**1949505050** **1949501230** **1949501230**	410	183x17.0/11.8x178	**587009J** **587008J**	19495	8x19495	8xMP/32/2	**8162080002**	**810800J**	64	8x18x15.5-180°
	89-		•	**1949609580** **1949609530**	**1949605050** **1949601230** **1949601230**	410	223x17.0/11.8x178	**587009J** **587008J**	19496	8x19496	8xMP/36/2	**8162080003**	**810800J**	64	8x20x15.5-180°
709R	84-87	•			**1727805380**	304	105x11.5/7.2x259 105x10.56x259.13	**587009J** **587008J**	17278 17927	2x17278 + 2x17927	2xMB/109/2 + 2xMB/109/1	**8162080001**	**810800J**	40	8x15x15.5-180°
	84-87		•		**1516205380**	304	90x11.5/7.2x259 90x10.56x259.13	**587008J**	15162 15836	2x15162 + 2x15836	2xMB/116/2 + 2xMB/116/1	**8103080001**	**810800J**	40	8x12x15.5-180°
709R, 711 **809K, 809***(7.5t)* **814***(K 7.5t,L 7.5t,S 7.5t)*	87-	•			**1727835380**	308	105x13.3/9.0x259 105x10.56x259.13	**587009J** **587008J**	17278 17927	2x17278 + 2x17927	2xMB/109/2 + 2xMB/109/1	**8162080001**	**810800J**	40	8x15x15.5-180°
709, 709K	84-87	•	•		**1516205380**	304	90x11.5/7.2x259 90x10.56x259.13	**587008J**	15162 15836	2x15162 + 2x15836	2xMB/116/2 + 2xMB/116/1	**8103080001**	**810800J**	40	8x12x15.5-180°
709, 709K, 709R, 711	87-		•		**1516235380**	308	90x13.2/9.0x259 90x10.56x259.13	**587008J**	15162 15836	2x15162 + 2x15836	2xMB/116/2 + 2xMB/116/1	**8103080001**	**810800J**	40	8x12x15.5-180°
709, 709K, 711 **814***(K,L,S)* **809K, 809***(8.6t,8t)*	87-	•			**1516235380**	308	90x13.2/9.0x259 90x10.56x259.13	**587008J**	15162 15836	2x15162 + 2x15836	2xMB/116/2 + 2xMB/116/1	**8103080001**	**810800J**	40	8x12x15.5-180°
711, 811, 811K **914***(A,AF,AK,K,KO,LAF,S)* **809K, 809***(8.6t,8t)* **917***(A,AF,AK,K,KO,LAF)* **814***(F,K,KO,L,S)* **817***(F,K,L,LS,S)*	87-		•		**1728035380**	308	120x13.3/9.0x259 120x10.56x259.13	**587009J** **587008J**	17280 17928	2x17280 + 2x17928	2xMB/110/2 + 2xMB/110/1	**8162080001**	**810800J**	40	8x15x15.5-180°
711, 811, 811K **914***(A,AF,AK,K,KO,LAF,S)* **809K, 809***(8.6t,8t)* **917***(A,AF,AK,LAF)* **814***(F,K,KO,L,S)* **817***(F,K,L,LS,S)*	87-		•		**1728735380**	308	135x13.3/9.0x259 135x10.56x256.13	**587009J** **587008J**	17287 17929	2x17287 + 2x17929	2xMB/115/2 + 2xMB/115/1	**8162080001**	**810800J**	40	8x15x15.5-180°
809K, 809*(8.6t,8t)*	84-87	•	•		**1728005380**	304	120x11.5/7.2x259 120x10.56x259.13	**587009J** **587008J**	17280 17928	2x17280 + 2x17928	2xMB/110/2 + 2xMB/110/1	**8162080001**	**810800J**	40	8x15x15.5-180°

© JURID / All rights reserved 2005

© JURID / All rights reserved 2005

Mercedes Benz...

MK / SK...

1416 *(A,A Ch.# 375522 >,AK,AK Ch.# 375522 >, K,K Ch.# 375522 >)*														
1425 *(AF Ch.# 375522 >,AF Ch.# > 375521, F,F Ch.# 375522 >,F Ch.# > 375521, L,L Ch.# 375522 >,L Ch.# > 375521,LS,S)*														
1426 *(F,LS,S)*														
1424 *(AK Ch.# 375522 >,F,F Ch.# 375522 >, F Ch.# > 375521,L,L Ch.# 375522 >, LS,S,S Ch.# 375522 >,S Ch.# > 375521)*														
1422 *(F,F Ch.# 375522 >,F Ch.# > 375521, L,L Ch.# 375522 >,LL,LS,S,S Ch.# 375522 >, S Ch.# > 375521)*														
1428, 1429 *(A,A Ch.# 375522 >,A Ch.# > 375521, AF,AF Ch.# 375522 >,AF Ch.# > 375521)*														
1420 *(AK Ch.# 375522 >,L,L Ch.# 375522 >, LS,LS Ch.# 375522 >)*	75-86	•	**1949409580** **1949409530**	**1949405050** **1949401230** **1949401230**	410	163x17.0/11.8x178	**587009J** **587008J**	19494	8x19494	8xMP/31/2	**8162080001**	**810800J**	64	8x15x15.5-180°
1419 *(AK Ch.# 375522 >,AK Ch.# > 375521, AS Ch.# 375522 >,AS Ch.# > 375521, C,C Ch.# 375522 >,C Ch.# > 375521, CL,F,F Ch.# 375522 >,F Ch.# > 375521, K Ch.# 375522 >,K Ch.# > 375521, L,LS,S,S Ch.# 375522 >,S Ch.# > 375521)*														
1413, 1414 *(A Ch.# 375522 >,A Ch.# > 375521, AK Ch.# 375522 >,AK Ch.# > 375521, AKO Ch.# 375522 >,AKO Ch.# > 375521, K,K Ch.# 375522 >,K Ch.# > 375521, KO,KO Ch.# 375522 >,KO Ch.# > 375521)*														
1431 *(F,LS)*														
1427 *(F,L,LS,S)*														
1417 *(A Ch.# 375522 >,A Ch.# > 375521, AK Ch.# 375522 >,AK Ch.# > 375521, AKO Ch.# 375522 >,AKO Ch.# > 375521,*														

© JURID / All rights reserved 2005

© JURID / All rights reserved 2005

Mercedes Benz...




...

MK / SK...

M

1422
(F,F Ch.# 375522 >,F Ch.# > 375521,
L,LL,LS,S,S Ch.# 375522 >,S Ch.# > 375521)

1431 *(F,LS)*

1442
(AF,AF Ch.# 375522 >,AF Ch.# > 375521)

1417
(A,A Ch.# 375522 >,A Ch.# > 375521,
AK,AK Ch.# 375522 >,AK Ch.# > 375521,
AKO,AKO Ch.# 375522 >,AKO Ch.# > 375521,
C,CA,CA Ch.# 375522 >,CA Ch.# > 375521,
CAK,CAK Ch.# 375522 >,CAK Ch.# > 375521,
CK,CK Ch.# 375522 >,CK Ch.# > 375521,
CS,K,K Ch.# 375522 >,K Ch.# > 375521,
KO,KO Ch.# 375522 >,KO Ch.# > 375521)

1426, 1427 *(F,S)*

1419
(AK,AK Ch.# 375522 >,AK Ch.# > 375521,
AS,AS Ch.# 375522 >,AS Ch.# > 375521,
C,C Ch.# 375522 >,C Ch.# > 375521,
CL,F,F Ch.# 375522 >,F Ch.# > 375521,
K,K Ch.# 375522 >,K Ch.# > 375521,
L,LS,S,S Ch.# 375522 >,S Ch.# > 375521)

1420 *(AK,L,L Ch.# 375522 >,L Ch.# > 375521,* *LS,LS Ch.# 375522 >,LS Ch.# > 375521)* **1416** *(A,AK,K)* **1424** *(AK,F,F Ch.# 375522 >,F Ch.# > 375521,* *K,LS,S,S Ch.# 375522 >,S Ch.# > 375521)* **1413** *(A,A Ch.# 375522 >,A Ch.# > 375521,* *AK,AK Ch.# 375522 >,AK Ch.# > 375521,* *AKO,AKO Ch.# 375522 >,AKO Ch.# > 375521,* *K,K Ch.# 375522 >,K Ch.# > 375521,* *KO,KO Ch.# 375522 >,KO Ch.# > 375521)* **1428, 1429** *(A,A Ch.# 375522 >,A Ch.# > 375521,* *AF,AF Ch.# 375522 >,AF Ch.# > 375521)* **1414** *(A,A Ch.# > 375521,AK,AK Ch.# > 375521,* *AKO,AKO Ch.# > 375521,K,K Ch.# > 375521,* *KO,KO Ch.# > 375521)* **1425** *(AF,AF Ch.# 375522 >,AF Ch.# > 375521,* *F,F Ch.# 375522 >,F Ch.# > 375521,* *L,L Ch.# 375522 >,L Ch.# > 375521,LS,S)*	75-86	•	**1723805380** **1768309530**	410	143x17.0/11.8x178	**587009J** **587008J**	17238	8x17238	8xMP/30/2	**8162080002**	**810800J**	64	8x18x15.5-180°
---	---	---	---	---	---	---	---	---	---	---	---	---	---

M

© JURID / All rights reserved 2005

© JURID / All rights reserved 2005

Mercedes Benz...

MK / SK...

1428, 1429(A,AF) **1442**(AF) **1420**(L,LS) **1417**(A,AK,AKO,C,CA,CAK,CK,CS,K,KO) **1422**(F,L,LL,LS,S) **1413, 1414**(A,AK,AKO,K,KO) **1419**(AK,AS,C,CL,F,K,L,LS,S) **1425**(AF,F,L,LS,S) **1424**(F,K,LS,S)	75-86	•		**1723805380** **1768309530**	410	143x17.0/11.8x178	**587009J** **587008J**	17238	8x17238	8xMP/30/2	**8162080002**	**810800J**	64	8x18x15.5-180°
1413, 1418	63-66	•	•	**1725935380**	408	120x12.0x213		17259	8x17259	8xMB/56/1	**8103080003**	**810800J**	64	8x15x15.5-180°
1428, 1429(A,AF) **1425**(F,L,LS) **1426, 1427**(LS,S) **1419**(C,CL,F,K,L,LS,S) **1422**(F,L,LL,LS,S) **1416**(A,AK,K) **1417**(A,AK,CS,K,KO) **1424**(AK,F,K,L,LS,S) **1420**(AK,L,LS) **1431**(F,LS)	75-86	•		**1949409580** **1949409530** **1949405050** **1949401230** **1949401230**	410	163x17.0/11.8x178	**587009J** **587008J**	19494	8x19494	8xMP/31/2	**8162080001**	**810800J**	64	8x15x15.5-180°
1426(F,LS,S) **1424**(AK) **1420**(L,LS) **1417**(K) **1416**(A,AK,K) **1422, 1427**(F,L,LS,S)	75-86	•		**1949509580** **1949509530** **1949505050** **1949501230** **1949501230**	410	183x17.0/11.8x178	**587009J** **587008J**	19495	8x19495	8xMP/32/2	**8162080002**	**810800J**	64	8x18x15.5-180°
1418(L,LK,LS)	75-88	•	•		**1729805380**	418	120x15.0x213		17298	8x17298	8xMB/68/1	**8103080003**	**810800J**	64	8x15x15.5-180°
1418, 1424(LP,LPS,LS)	66-75	•			**1710505380** **1710509530**	418	140x15.7x213		17105	8x17105	8xMB/65/1	**8103080003**	**810800J**	64	8x15x15.5-180°
	66-75		•		**1918205380**	418	160x15.7x213		19182	8x19182	8xMB/66/1	**8103080003**	**810800J**	64	8x15x15.5-180°
1426(F) **1424, 1427, 1431**(F,LS) **1420**(LS) **1429**(AF) **1422**(F,L,LS)	75-86		•	**1949609580** **1949609530**	**1949605050** **1949601230** **1949601230**	410	223x17.0/11.8x178	**587009J** **587008J**	19496	8x19496	8xMP/36/2	**8162080003**	**810800J**	64	8x20x15.5-180°
1428, 1429(A,AF)	76-82	•			**1768205380** **1768209530**	410	123x17.0/11.8x178		17682	8x17682	8xMP/29/1	**8162080001**	**810800J**	64	8x15x15.5-180°
1422, 1424, 1426, 1427, 1431(F)	82-85	•			**1791505380**	410	123x17.0/12.9x178		17915	8x17915		**8162080002**	**810800J**	64	8x18x15.5-180°
1431(F,LS) **1428, 1429**(A,AF) **1425**(F)	75-86		•	**1949509580** **1949509530**	**1949505050** **1949501230** **1949501230**	410	183x17.0/11.8x178	**587009J** **587008J**	19495	8x19495	8xMP/32/2	**8162080002**	**810800J**	64	8x18x15.5-180°

© JURID / All rights reserved 2005

© JURID / All rights reserved 2005

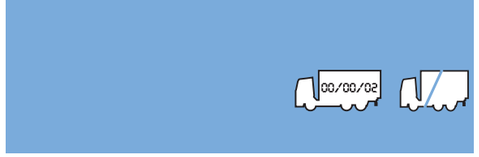

Mercedes Benz...





MK / SK...

1513, 1517, 1519	67-75	•		**1710505380** **1710509530**	418	140x15.7x213		17105	8x17105	8xMB/65/1	**8103080003**	**810800J**	64	8x15x15.5-180°
	67-75	•		**1918205380**	418	160x15.7x213		19182	8x19182	8xMB/66/1	**8103080003**	**810800J**	64	8x15x15.5-180°
1617, 1619*(C)* **1622***(AK,K,LS)* **1620***(K)* **2219, 2220***(C,CL)* **1613, 1614***(L)* **1621***(L,LK,LS)*	75-91	•	**1949509580** **1949509530**	**1949505050** **1949501230** **1949501230**	410	183x17.0/11.8x178	**587009J** **587008J**	19495	8x19495	8xMP/32/2	**8162080002**	**810800J**	64	8x18x15.5-180°
1622*(AK,K,L,LL,LS,S)* **1613, 1614***(K,L)* **1620***(K,L,LL)* **2219, 2220** *(C 6x2,C 6x4,CL 6x2,CL 6x4)* **1621***(L,LK,LS)* **1617, 1619***(C,CK,CL,CS,K,KO,L,S)* **2224***(6x2,B 6x4,K 6x4,S 6x4)*	75-91	•	**1949409580** **1949409530**	**1949405050** **1949401230** **1949401230**	410	163x17.0/11.8x178	**587009J** **587008J**	19494	8x19494	8xMP/31/2	**8162080001**	**810800J**	64	8x15x15.5-180°
1620 *(K,K Ch.# 375522 >,L,L Ch.# 375522 >,* *L Ch.# > 375521,LL,LL Ch.# 375522 >,* *LL Ch.# > 375521)* **1617, 1619** *(A Ch.# 375522 >,A Ch.# > 375521,* *AK Ch.# 375522 >,AK Ch.# > 375521,* *C,C Ch.# 375522 >,CAK Ch.# 375522 >,* *CK,CK Ch.# 375522 >,CL,CL Ch.# 375522 >,* *CL Ch.# > 375521,CS,K,K Ch.# 375522 >,* *K Ch.# > 375521,KO,KO Ch.# 375522 >,* *KO Ch.# > 375521,L,L Ch.# 375522 >,* *L Ch.# > 375521,S,S Ch.# 375522 >,* *S Ch.# > 375521)* **2219, 2220** *(C,C Ch.# 375522 >,C Ch.# 375522 > 6x2,* *C Ch.# 375522 > 6x4,C Ch.# > 375521 6x2,* *C Ch.# > 375521 6x4,CL,CL Ch.# 375522 > 6x2,* *CL Ch.# 375522 > 6x4,L,L 6x2,* *L Ch.# 375522 > 6x2,L Ch.# 375522 > 6x4,* *L Ch.# > 375521 6x2,L Ch.# > 375521 6x4)* **1622** *(K,L,L Ch.# 375522 >,L Ch.# > 375521,* *LL,LS,LS Ch.# 375522 >,LS Ch.# > 375521,* *S,S Ch.# 375522 >,S Ch.# > 375521)* **1613, 1614** *(K,K Ch.# 375522 >,K Ch.# > 375521,* *L,L Ch.# 375522 >,L Ch.# > 375521)* **2224** *(Ch.# 375522 > 6x2,Ch.# > 375521 6x2)*	75-91	•	**1949409580** **1949409530**	**1949405050** **1949401230** **1949401230**	410	163x17.0/11.8x178	**587009J** **587008J**	19494	8x19494	8xMP/31/2	**8162080001**	**810800J**	64	8x15x15.5-180°

JURID by Honeywell

© JURID / All rights reserved 2005

© JURID / All rights reserved 2005

JURID by Honeywell

M

Mercedes Benz...

MK / SK...

1622*(AK)* **1613, 1614, 1620***(K)* **2224***(6x2,B 6x4,K 6x4,S 6x4)* **1617, 1619***(C,CAK,CK)* **2219, 2220***(CL,L 6x2,L 6x4)*	75-91	•		**1723805380** **1768309530**	410	143x17.0/11.8x178	**587009J** **587008J**	17238	8x17238	8xMP/30/2	**8162080002**	**810800J**	64	8x18x15.5-180°
1617, 1619*(A,AK,CAK)* **1613, 1614***(K)* **1622***(AK)*	75-91	•		**1723805380** **1768309530**	410	143x17.0/11.8x178	**587009J** **587008J**	17238	8x17238	8xMP/30/2	**8162080002**	**810800J**	64	8x18x15.5-180°
1622*(AK,K,L,LL,LS)* **1613, 1614***(L)*	75-91	•	**1949609580** **1949609530**	**1949605050** **1949601230** **1949601230**	410	223x17.0/11.8x178	**587009J** **587008J**	19496	8x19496	8xMP/36/2	**8162080003**	**810800J**	64	8x20x15.5-180°
1622*(AK,K,L,LL,S)*	75-91	•	**1949509580** **1949509530**	**1949505050** **1949501230** **1949501230**	410	183x17.0/11.8x178	**587009J** **587008J**	19495	8x19495	8xMP/32/2	**8162080002**	**810800J**	64	8x18x15.5-180°
1624*(K,L,LK,LS,S)*	70-91	•	**1949409580** **1949409530**	**1949405050** **1949401230** **1949401230**	410	163x17.0/11.8x178	**587009J** **587008J**	19494	8x19494	8xMP/31/2	**8162080001**	**810800J**	64	8x15x15.5-180°
1624*(S)*	70-91	•	**1949509580** **1949509530**	**1949505050** **1949501230** **1949501230**	410	183x17.0/11.8x178	**587009J** **587008J**	19495	8x19495	8xMP/32/2	**8162080002**	**810800J**	64	8x18x15.5-180°
1624*(LP,LPK,LPS)*	70-91	•		**1727605050** **1727601820**	430	140x15.0x182		17276	8x17276	8xMB/60/1	**8103080007**	**810800J**	64	8x20x15.5-180°
1624*(LAK,LAS)*	70-91	•		**1728505050**	440	140x10.0x191		17285	8x17285	8xBC/2/1	**8103080007**	**810800J**	64	8x20x15.5-180°
1624 *(K Ch.# 375522 >,K Ch.# > 375521,* *L Ch.# 375522 >,L Ch.# > 375521,* *LS Ch.# 375522 >,LS Ch.# > 375521,* *S,S Ch.# 375522 >,S Ch.# > 375521)*	70-91	•	**1949409580** **1949409530**	**1949405050** **1949401230** **1949401230**	410	163x17.0/11.8x178	**587009J** **587008J**	19494	8x19494	8xMP/31/2	**8162080001**	**810800J**	64	8x15x15.5-180°
1624*(LK,LS)*	70-91	•	**1949509580** **1949509530**	**1949505050** **1949501230** **1949501230**	410	183x17.0/11.8x178	**587009J** **587008J**	19495	8x19495	8xMP/32/2	**8162080002**	**810800J**	64	8x18x15.5-180°
1624*(S)*	70-91	•		**1723805380** **1768309530**	410	143x17.0/11.8x178	**587009J** **587008J**	17238	8x17238	8xMP/30/2	**8162080002**	**810800J**	64	8x18x15.5-180°
1624*(LAK,LAS,LK,LP,LPK,LPS,LS)*	70-91	•		**1916005050** **1916009530**	440	170x15.0x186		19160	8x19160	8xMB/51/1	**8103080007**	**810800J**	64	8x20x15.5-180°
1625*(A,AK,K,L,LAK,S)*	80-91	•		**1723805380** **1768309530**	410	143x17.0/11.8x178	**587009J** **587008J**	17238	8x17238	8xMP/30/2	**8162080002**	**810800J**	64	8x18x15.5-180°
1625*(A,AK,K,L,LL,LS,S)* **2228***(A)* **2028, 2032, 2033, 2035, 2036** *(LS 6x2/4,S 6x2/4)* **1628***(L,LL,LS,S)* **1633, 1635, 1636, 1638, 1644, 1650** *(K,L,LS,S)*	80-91	•	**1949409580** **1949409530**	**1949405050** **1949401230** **1949401230**	410	163x17.0/11.8x178	**587009J** **587008J**	19494	8x19494	8xMP/31/2	**8162080001**	**810800J**	64	8x15x15.5-180°

© JURID / All rights reserved 2005

© JURID / All rights reserved 2005

Mercedes Benz...

...

MK / SK...

2228 *(A 6x2,F 6x2,L,L 6x2,LL,LS 6x2, S 6x2)* **1628***(LL)* **2028, 2032, 2033, 2035, 2036** *(LS 6x2/4,S 6x2/4)* **1625***(A,AK,K,L,LL,S,SA)* **1633, 1635, 1636, 1638, 1644, 1650** *(K,L,LS,S)*	80-91	•	**1949509580** **1949509530**	**1949505050** **1949501230** **1949501230**	410	183x17.0/11.8x178	**587009J** **587008J**	19495	8x19495	8xMP/32/2	**8162080002**	**810800J**	64	8x18x15.5-180°
2228 *(Ch.# > 375521,F 6x2,L,L 6x2,L Ch.# 375522 >, LL,LL Ch.# 375522 >,LS 6x2,S 6x2)* **2233, 2238** *(L 6x2,L 6x4,S 6x2,S 6x4)* **1625** *(A Ch.# 375522 >,AK Ch.# 375522 >, L,L Ch.# 375522 >,L Ch.# > 375521, LL,LL Ch.# 375522 >)* **1628***(L,LL,LS,S)*	80-91	•	**1949409580** **1949409530**	**1949405050** **1949401230** **1949401230**	410	163x17.0/11.8x178	**587009J** **587008J**	19494	8x19494	8xMP/31/2	**8162080001**	**810800J**	64	8x15x15.5-180°
2028*(S)* **1625***(SA)* **2233, 2238** *(L 6x2,L 6x4,S 6x2,S 6x4)* **1633, 1635, 1636, 1644***(K,L,LS,S)* **2228** *(A 6x2,F 6x2,L 6x2,LL 6x2,LS 6x2, S 6x2)*	80-91	•	**1949609580** **1949609530**	**1949605050** **1949601230** **1949601230**	410	223x17.0/11.8x178	**587009J** **587008J**	19496	8x19496	8xMP/36/2	**8162080003**	**810800J**	64	8x20x15.5-180°
2228*(A,L 6x2,LL 6x2)* **1625, 1633, 1636***(L)* **2233, 2238***(L 6x2)*	80-91	•	**1949509580** **1949509530**	**1949505050** **1949501230** **1949501230**	410	183x17.0/11.8x178	**587009J** **587008J**	19495	8x19495	8xMP/32/2	**8162080002**	**810800J**	64	8x18x15.5-180°
1625*(A,AK,L)* **2228** *(Ch.# > 375521,L,L Ch.# 375522 >, LL,LL Ch.# 375522 >)*	80-91	•		**1723805380** **1768309530**	410	143x17.0/11.8x178	**587009J** **587008J**	17238	8x17238	8xMP/30/2	**8162080002**	**810800J**	64	8x18x15.5-180°
1626*(AK,AS,K,L,LS,S)*	74-91	•	**1949409580** **1949409530**	**1949405050** **1949401230** **1949401230**	410	163x17.0/11.8x178	**587009J** **587008J**	19494	8x19494	8xMP/31/2	**8162080001**	**810800J**	64	8x15x15.5-180°
1626*(LP,LPK,LPS)*	74-91	•		**1727605050** **1727601820**	430	140x15.0x182		17276	8x17276	8xMB/60/1	**8103080007**	**810800J**	64	8x20x15.5-180°
1626*(AK,AS,K,L,LP,LPK,LPS,LS,S)*	74-91		**1949509580** **1949509530**	**1949505050** **1949501230** **1949501230**	410	183x17.0/11.8x178	**587009J** **587008J**	19495	8x19495	8xMP/32/2	**8162080002**	**810800J**	64	8x18x15.5-180°
1626*(K,LP,LPK,LPS,S)*	74-91	•	**1949609580** **1949609530**	**1949605050** **1949601230** **1949601230**	410	223x17.0/11.8x178	**587009J** **587008J**	19496	8x19496	8xMP/36/2	**8162080003**	**810800J**	64	8x20x15.5-180°
1632*(LP,LPS)*	70-75	•		**1727605050** **1727601820**	430	140x15.0x182		17276	8x17276	8xMB/60/1	**8103080007**	**810800J**	64	8x20x15.5-180°
1632*(AK,AS,K,L,LS,S)*	73-91	•	**1949409580** **1949409530**	**1949405050** **1949401230** **1949401230**	410	163x17.0/11.8x178	**587009J** **587008J**	19494	8x19494	8xMP/31/2	**8162080001**	**810800J**	64	8x15x15.5-180°

© JURID / All rights reserved 2005

© JURID / All rights reserved 2005

Mercedes Benz...

...

MK / SK...

1632 *(AK,AS,K,L,LP Ch.# 815018 >, LPK Ch.# 815018 >, LPS Ch.# 815018 >,LS,S)*	73-91	•	**1949509580** **1949509530**	**1949505050** **1949501230** **1949501230**	410	183x17.0/11.8x178	**587009J** **587008J**	19495	8x19495	8xMP/32/2	**8162080002**	**810800J**	64	8x18x15.5-180°
1632 *(LP,LPK,LPS)*	73-91	•	**1949609580** **1949609530**	**1949605050** **1949601230** **1949601230**	410	223x17.0/11.8x178	**587009J** **587008J**	19496	8x19496	8xMP/36/2	**8162080003**	**810800J**	64	8x20x15.5-180°
1924 *(LAK,LAS)* **1632** *(LP Ch.# > 815017, LPS Ch.# > 815017)*	69-89	•		**1916005050** **1916009530**	440	170x15.0x186		19160	8x19160	8xMB/51/1	**8103080007**	**810800J**	64	8x20x15.5-180°
1940, 2622 **2428** *(A,L)* **2435, 2448** *(L 6x2,L 6x2/4,L 6x4,LS 6x2, LS 6x2/4,LS 6x4,S 6x2,S 6x2/4, S 6x4)* **2426, 2427** *(B 6x2,B 6x4,L 6x2,L 6x4)* **2433** *(L 6x2,L 6x2/4,LS 6x2/4,S 6x2/4)* **1948** *(Powerliner 480)* **2438, 2444** *(L 6x2,LS 6x2)* **2436** *(A 6x4,AK 6x4,K 6x4)* **1929** *(A,AK,AS,K,L,S)* **2429** *(K 6x2,K 6x2/4,K 6x4,L 6x2, L 6x2/4,L 6x4,LS 6x2,LS 6x2/4, LS 6x4,S 6x2,S 6x2/4,S 6x4)* **1935** *(AS 6x6,K 6x6, Powerliner 350 6x6,S 6x6)* **1728, 1729** *(K,L,LS,S)* **2422** *(K 6x2,K 6x4,L 6x2,L 6x4)* **1720, 1722, 1724** *(AK,K,L,LL,S)* **2431** *(6x2)* **1735** *(AF,K,L,LS,S)* **1732, 1734** *(L)* **2420** *(L 6x2,L 6x4,LS 6x2,LS 6x4,S 6x2, S 6x4)* **1719** *(S)* **3236** *(A 8x8)* **1922** *(AK,KS,S)* **1726, 1727** *(AK,K,L,LL,LS,S)* **1717** *(AK,K,L)* **2425, 2432, 2434** *(L 6x2)* **1733, 1748, 1750** *(L,LS,S)*	89-91	•	**1949609580** **1949609530**	**1949605050** **1949601230** **1949601230**	410	223x17.0/11.8x178	**587009J** **587008J**	19496	8x19496	8xMP/36/2	**8162080003**	**810800J**	64	8x20x15.5-180°

© JURID / All rights reserved 2005

© JURID / All rights reserved 2005

			→STOCK	STOCK→	∅ mm				WVA	BFMC	JURID	SUPASET	#	

Mercedes Benz...

...

MK / SK...

1929(A,AK,AS,K,L,S) **2622** **2428**(A,L) **2429, 2435** (L 6x2,L 6x2/4,LS 6x2,LS 6x2/4, S 6x2,S 6x2/4) **3236**(A 8x8) **1922**(K) **1733**(L) **1719**(AK,K,S) **1935** (AS 6x6,K 6x6, Powerliner 350 6x6,S 6x6) **2425**(L 6x2) **1735**(AF,AK) **2436**(A 6x4,AK 6x4,K 6x4) **1717, 1720, 1722, 1724, 1728,** **1729** (AK) **2431**(6x2)	89-91	•	**1949409580** **1949409530**	**1949405050** **1949401230** **1949401230**	410	163x17.0/11.8x178	**587009J** **587008J**	19494	8x19494	8xMP/31/2	**8162080001**	**810800J**	64	8x15x15.5-180°
1929(A,AK,AS,K,L,S) **1735**(AF,K,L,LS,S) **2448** (L 6x2,L 6x2/4,L 6x4,LS 6x2, LS 6x2/4,LS 6x4,S 6x2,S 6x2/4, S 6x4) **2435** (L 6x2,L 6x2/4,LS 6x2,LS 6x2/4, S 6x2,S 6x2/4) **1940** **2420** (L 6x2,L 6x4,LS 6x2,LS 6x4,S 6x2, S 6x4) **1717**(K,L) **2422**(L 6x2,L 6x4) **2426, 2427** (B 6x2,B 6x4,L 6x2,L 6x4) **1732, 1734, 2428**(L) **1922**(AK,K,S) **2429**(K 6x4,LS 6x4,S 6x4) **1726, 1727**(K,L,LL,LS,S) **1948**(Powerliner 480) **1728, 1729**(K,L,LS,S) **1733, 1748, 1750**(L,LS,S) **2433** (K 6x2/4,K 6x4,L 6x2,L 6x2/4, L 6x4,LS 6x2/4,LS 6x4,S 6x2/4, S 6x4) **2436**(A 6x4,AK 6x4,K 6x4) **1720, 1722, 1724**(AK,K,L,LL,S) **2432, 2434**(L 6x2)	89-91	•	**1949509580** **1949509530**	**1949505050** **1949501230** **1949501230**	410	183x17.0/11.8x178	**587009J** **587008J**	19495	8x19495	8xMP/32/2	**8162080002**	**810800J**	64	8x18x15.5-180°

JURID by Honeywell
© JURID / All rights reserved 2005
© JURID / All rights reserved 2005
JURID by Honeywell

Mercedes Benz...

MK / SK...

1929*(A,AK,AS,K,L,S)* **1735***(AF,K,L,LS,S)* **2428***(A,L)* **2429** *(K 6x2,K 6x2/4,K 6x4,L 6x2, L 6x2/4,L 6x4,LS 6x2,LS 6x2/4, LS 6x4,S 6x2,S 6x2/4,S 6x4)* **2438, 2444***(L 6x2,LS 6x2)* **1940, 2622** **3236***(A 8x8)* **1719***(AK)* **2426, 2427** *(B 6x2,B 6x4,L 6x2,L 6x4)* **1733***(L)* **2435** *(L 6x2,L 6x2/4,L 6x4,LS 6x2, LS 6x2/4,LS 6x4,S 6x2,S 6x2/4, S 6x4)* **1728, 1729***(K,L,LS,S)* **2433***(K 6x4,L 6x2)* **2448***(L 6x2,L 6x2/4,LS 6x2,LS 6x2/4,S 6x2,S 6x2/4)* **2422***(K 6x2,K 6x4,L 6x2,L 6x4)* **2436***(A 6x4,AK 6x4,K 6x4)* **1922***(AK,KS,S)* **2425, 2432***(L 6x2)*	89-91	•	**1949509580** **1949509530**	**1949505050** **1949501230** **1949501230**	410	183x17.0/11.8x178	**587009J** **587008J**	19495	8x19495	8xMP/32/2	**8162080002**	**810800J**	64	8x18x15.5-180°
1720	89-91	• •		**1907825380**	364	200x15.5/10.0x173.6 200x15.95x130.55 200x15.37x173.5	**587008J**	19078 19112 19505	2x19078 + 19112 + 2x19505	2xMB/120/1 + 4xMB/121/1 + 2xMB/120/2	**8162080001**	**810800J**	56	8x15x15.5-180°
1726, 1727*(AK)* **2425***(L 6x2)* **1728, 1729***(K,L,LS,S)* **2428***(L)* **2422***(6x2,6x4)*	89-91	•		**1723805380** **1768309530**	410	143x17.0/11.8x178	**587009J** **587008J**	17238	8x17238	8xMP/30/2	**8162080002**	**810800J**	64	8x18x15.5-180°

© JURID / All rights reserved 2005

© JURID / All rights reserved 2005

Mercedes Benz...

...

MK / SK...

1929*(A)* **2622** **2428***(A,L)* **1733** *(L,L Ch.# 375522 >,L Ch.# > 375521)* **1735***(AF)* **2448** *(L 6x2,L 6x2/4,LS 6x2,LS 6x2/4, LS 6x4,S 6x2,S 6x2/4)* **1922***(K)* **2426, 2427***(B 6x2,B 6x4,L 6x2)* **2422** *(6x2,6x4,K 6x2,K 6x4,L 6x2,L 6x4)* **2420** *(L 6x2,L 6x4,LS 6x2,LS 6x4,S 6x2, S 6x4)* **2435***(L 6x2/4,LS 6x2/4,S 6x2/4)* **2425, 2432, 2434***(L 6x2)* **2433***(K 6x4,L 6x2,L/S 6x2/4)* **3236***(A 8x8)* **2429** *(K 6x4,L 6x2/4,LS 6x2/4,LS 6x4, S 6x2/4,S 6x4)*	89-91		•	**1949409580** **1949409530**	**1949405050** **1949401230** **1949401230**	410	163x17.0/11.8x178	**587009J** **587008J**	19494	8x19494	8xMP/31/2	**8162080001**	**810800J**	64	8x15x15.5-180°
2426, 2427*(B 6x2,B 6x4)* **2432***(L 6x2)* **1733***(L)* **2433***(K 6x4,L 6x2)* **2422***(6x2,6x4)*	89-91		•	**1723805380** **1768309530**		410	143x17.0/11.8x178	**587009J** **587008J**	17238	8x17238	8xMP/30/2	**8162080002**	**810800J**	64	8x18x15.5-180°
1813, 1817, 1819*(L)*	70-89	•	•	**1729805380**		418	120x15.0x213		17298	8x17298	8xMB/68/1	**8103080003**	**810800J**	64	8x15x15.5-180°
	70-75		•	**1727605050** **1727601820**		430	140x15.0x182		17276	8x17276	8xMB/60/1	**8103080007**	**810800J**	64	8x20x15.5-180°
	76-89		•	**1710505380** **1710509530**		418	140x15.7x213		17105	8x17105	8xMB/65/1	**8103080003**	**810800J**	64	8x15x15.5-180°

© JURID / All rights reserved 2005

© JURID / All rights reserved 2005

→STOCK STOCK→ ∅ mm WVA BFMC JURID SUPASET #

Mercedes Benz...

...

MK / SK...

1926 *(K,LP,LPS,LS)* **1945, 1948** *(A,AF,AK)* **1925, 1927** *(AK)* **2624** *(A 6x4,A 6x6,AK 6x4,AK 6x6, L 6x4,L 6x6,LK 6x4,LK 6x6,LS 6x4, LS 6x6)* **2628, 2632** *(A 6x6,AK 6x6,AS 6x6)* **1921** *(L,LK,LS,S)* **1924** *(L,LK,LS)* **1919** *(AK,K,L,LK,LS,S)* **2626** *(A 6x6,AB 6x6,AK 6x6,AS 6x6)* **1932, 1933** *(A,AK,AS,K,LP,LPS,LS,S)* **1935, 1936** *(A,AK,AS,LAS,LS,S)*	73-88	•	**1949409580** **1949409530**	**1949405050** **1949401230** **1949401230**	410	163x17.0/11.8x178	**587009J** **587008J**	19494	8x19494	8xMP/31/2	**8162080001**	**810800J**	64	8x15x15.5-180°
1945, 1948 *(A,AF,AK)* **1925, 1927** *(AK)* **2624** *(A 6x4,A 6x6,AK 6x4,AK 6x6,L 6x4, L 6x6,LK 6x4,LK 6x6,LS 6x4, LS 6x6)* **1924** *(L,LK,LS)* **2633** *(LS 6x4,S 6x4)* **2628** *(A 6x4,A 6x6,AK 6x4,AK 6x6, AS 6x4,AS 6x6,B 6x4,B 6x6,K 6x4, K 6x6,L 6x4,L 6x6,LK 6x4, LK 6x6,LS 6x4,LS 6x6,S 6x4,S 6x6)* **1919, 1921** *(AK,K,L,LK,LS,S)* **2632** *(A 6x4,A 6x6,AK 6x4,AK 6x6, AS 6x4,AS 6x6,K 6x4,K 6x6,S 6x4, S 6x6)* **1926** *(A,AK,AS,K,LP,LPS,LS)* **2626** *(A 6x4,A 6x6,AB 6x4,AB 6x6, AK 6x4,AK 6x6,AS 6x4,AS 6x6, B 6x4,B 6x6,K 6x4,K 6x6,S 6x4, S 6x6)* **1932, 1933** *(A,AK,AS,K,LP,LPS,LS,S)* **1935, 1936** *(A,AK,AS,LAS,LS,S)*	73-88	•	**1949509580** **1949509530**	**1949505050** **1949501230** **1949501230**	410	183x17.0/11.8x178	**587009J** **587008J**	19495	8x19495	8xMP/32/2	**8162080002**	**810800J**	64	8x18x15.5-180°
2624 *(L 6x4,LB 6x4,LK 6x4,LS 6x4)* **1921, 1924** *(L,LK,LP,LPS,LS)*	69-73	•		**1727605050** **1727601820**	430	140x15.0x182		17276	8x17276	8xMB/60/1	**8103080007**	**810800J**	64	8x20x15.5-180°
2624 *(L 6x4,LA 6x6,LAB 6x6,LAK 6x6, LAS 6x6,LB 6x4,LK 6x4,LS 6x4)* **1921, 1924** *(L,LK,LP,LPS,LS)*	69-73	•		**1916005050** **1916009530**	440	170x15.0x186		19160	8x19160	8xMB/51/1	**8103080007**	**810800J**	64	8x20x15.5-180°

JURID by Honeywell © JURID / All rights reserved 2005
© JURID / All rights reserved 2005 JURID by Honeywell

Mercedes Benz...

MK / SK...

1922*(AK)*	82-91	•	**1949409580** **1949409530**	**1949405050** **1949401230** **1949401230**	410	163x17.0/11.8x178	**587009J** **587008J**	19494	8x19494	8xMP/31/2	**8162080001**	**810800J**	64	8x15x15.5-180°
2636*(A 6x6,AK 6x6,AS 6x6)* **1922***(K,S)*	82-88	•	**1949409580** **1949409530**	**1949405050** **1949401230** **1949401230**	410	163x17.0/11.8x178	**587009J** **587008J**	19494	8x19494	8xMP/31/2	**8162080001**	**810800J**	64	8x15x15.5-180°
2636 *(A 6x4,A 6x6,AK 6x4,AK 6x6, AS 6x4,AS 6x6,K 6x4,K 6x6,L 6x4, L 6x6,LS 6x4,LS 6x6,S 6x4,S 6x6)* **1922***(AK,K,S)*	82-88	•	**1949409580** **1949409530**	**1949405050** **1949401230** **1949401230**	410	163x17.0/11.8x178	**587009J** **587008J**	19494	8x19494	8xMP/31/2	**8162080001**	**810800J**	64	8x15x15.5-180°
	82-88	•	**1949509580** **1949509530**	**1949505050** **1949501230** **1949501230**	410	183x17.0/11.8x178	**587009J** **587008J**	19495	8x19495	8xMP/32/2	**8162080002**	**810800J**	64	8x18x15.5-180°
1924*(LAK,LAS)*	69-89	•		**1728505050**	440	140x10.0x191		17285	8x17285	8xBC/2/1	**8103080007**	**810800J**	64	8x20x15.5-180°
1926*(652)* **1945, 1948***(A,AF,AK)* **1925, 1927***(AK)* **1935, 1936***(A,AK,AS,K,LAS,LS,S)* **2628***(A 6x6,AK 6x6,AS 6x6)*	73-88	•	**1949509580** **1949509530**	**1949505050** **1949501230** **1949501230**	410	183x17.0/11.8x178	**587009J** **587008J**	19495	8x19495	8xMP/32/2	**8162080002**	**810800J**	64	8x18x15.5-180°
1926*(652)* **1925, 1927***(AK)* **2628** *(A 6x4,A 6x6,AK 6x4,AK 6x6, AS 6x4,AS 6x6,B 6x4,B 6x6,K 6x4, K 6x6,S 6x4,S 6x6)* **1945, 1948***(A,AF,AK)* **2633***(LS 6x4,S 6x4)* **1935, 1936***(A,AK,AS,LAS,LS,S)*	73-88	•	**1949609580** **1949609530**	**1949605050** **1949601230** **1949601230**	410	223x17.0/11.8x178	**587009J** **587008J**	19496	8x19496	8xMP/36/2	**8162080003**	**810800J**	64	8x20x15.5-180°
1926, 1932 *(LP Ch.# > 886512, LPS Ch.# > 886512)* **2024***(LPS 6x2)*	71-73	•		**1727605050** **1727601820**	430	140x15.0x182		17276	8x17276	8xMB/60/1	**8103080007**	**810800J**	64	8x20x15.5-180°
1926, 1932 *(LP Ch.# > 886512, LPS Ch.# > 886512)* **2024, 2032***(LPS 6x2)*	71-73	•	**1949509580** **1949509530**	**1949505050** **1949501230** **1949501230**	410	183x17.0/11.8x178	**587009J** **587008J**	19495	8x19495	8xMP/32/2	**8162080002**	**810800J**	64	8x18x15.5-180°
1928*(A)*	80-88	•	**1949409580** **1949409530**	**1949405050** **1949401230** **1949401230**	410	163x17.0/11.8x178	**587009J** **587008J**	19494	8x19494	8xMP/31/2	**8162080001**	**810800J**	64	8x15x15.5-180°
1928*(A,AK,AS,K,L,LK,LS,S)* **1938, 1944***(LS,S)*	80-88	•	**1949409580** **1949409530**	**1949405050** **1949401230** **1949401230**	410	163x17.0/11.8x178	**587009J** **587008J**	19494	8x19494	8xMP/31/2	**8162080001**	**810800J**	64	8x15x15.5-180°
	80-88	•	**1949509580** **1949509530**	**1949505050** **1949501230** **1949501230**	410	183x17.0/11.8x178	**587009J** **587008J**	19495	8x19495	8xMP/32/2	**8162080002**	**810800J**	64	8x18x15.5-180°

© JURID / All rights reserved 2005

© JURID / All rights reserved 2005

→STOCK STOCK→ ∅ mm WVA BFMC JURID SUPASET #

Mercedes Benz...

...

MK / SK...

1935, 1936, 1945, 1948(A) **2624** (A 6x4,A 6x6,AK 6x4,AK 6x6,L 6x4, L 6x6,LK 6x4,LK 6x6,LS 6x4, LS 6x6) **2633**(LS 6x4,S 6x4) **2628** (A 6x4,A 6x6,AK 6x4,AK 6x6, AS 6x4,AS 6x6,B 6x4,B 6x6,K 6x4, K 6x6,L 6x4,L 6x6,LK 6x4,LK 6x6, LS 6x4,LS 6x6,S 6x4,S 6x6) **2632** (A 6x4,A 6x6,AK 6x4,AK 6x6, AS 6x4,AS 6x6,K 6x4,K 6x6,S 6x4, S 6x6) **2626** (A 6x4,A 6x6,AB 6x4,AB 6x6, AK 6x4,AK 6x6,AS 6x4,AS 6x6, B 6x4,B 6x6,K 6x4,K 6x6,S 6x4, S 6x6)	73-88	•	**1949409580** **1949409530**	**1949405050** **1949401230** **1949401230**	410	163x17.0/11.8x178	**587009J** **587008J**	19494	8x19494	8xMP/31/2	**8162080001**	**810800J**	64	8x15x15.5-180°
1938, 1944(LS,S)	80-88	•	**1949609580** **1949609530**	**1949605050** **1949601230** **1949601230**	410	223x17.0/11.8x178	**587009J** **587008J**	19496	8x19496	8xMP/36/2	**8162080003**	**810800J**	64	8x20x15.5-180°
2219 (LP 6x2,LP 6x4,LPK 6x2,LPK 6x4) **2019**(6x2)	73-75	•		**1918205380**	418	160x15.7x213		19182	8x19182	8xMB/66/1	**8103080003**	**810800J**	64	8x15x15.5-180°
2219(LP 6x2,LPK 6x2) **2019**(6x2)	73-75	•		**1727605050** **1727601820**	430	140x15.0x182		17276	8x17276	8xMB/60/1	**8103080007**	**810800J**	64	8x20x15.5-180°
2024, 2032(LPS 6x2)	71-73	•		**1916005050** **1916009530**	440	170x15.0x186		19160	8x19160	8xMB/51/1	**8103080007**	**810800J**	64	8x20x15.5-180°
2026(S 6x2/4) **3228, 3229, 3233**(B 8x4/4,K 8x4/4) **2222** (B 6x2,B 6x4,K 6x2,K 6x4,L 6x2, L 6x4) **2225**(B,L) **2025**(S) **3235** (AK 8x4/4,B 8x4/4,K 8x4/4,L 8x4/4)	83-91	•	**1949409580** **1949409530**	**1949405050** **1949401230** **1949401230**	410	163x17.0/11.8x178	**587009J** **587008J**	19494	8x19494	8xMP/31/2	**8162080001**	**810800J**	64	8x15x15.5-180°
3228, 3229, 3233(B 8x4/4,K 8x4/4) **2222** (B 6x4,K 6x4,K Ch.# 375522 > 6x2, K Ch.# 375522 > 6x4, L 6x2,L Ch.# 375522 > 6x2, L Ch.# 375522 > 6x4, L Ch.# > 375521 6x2) **2225** (B,Ch.# > 375521, L,L Ch.# 375522 >) **2025**(S) **3235** (AK 8x4/4,B 8x4/4,K 8x4/4,L 8x4/4) **2226**(F 6x4,L 6x4,LS 6x4,S 6x4)	83-91	•	**1949409580** **1949409530**	**1949405050** **1949401230** **1949401230**	410	163x17.0/11.8x178	**587009J** **587008J**	19494	8x19494	8xMP/31/2	**8162080001**	**810800J**	64	8x15x15.5-180°

© JURID / All rights reserved 2005
© JURID / All rights reserved 2005

Mercedes Benz...

MK / SK...

2222 *(B 6x4,K 6x4,L 6x2)* **2225** *(B,L)* **2026** *(S 6x2/4)* **3228, 3229, 3233** *(B 8x4/4,K 8x4/4)* **3235** *(AK 8x4/4,B 8x4/4,K 8x4/4,L 8x4/4)*	83-91		•	**1949509580** **1949509530**	**1949505050** **1949501230** **1949501230**	410	183x17.0/11.8x178	**587009J** **587008J**	19495	8x19495	8xMP/32/2	**8162080002**	**810800J**	64	8x18x15.5-180°
2032 *(LPS 6x2)*	71-73	•	•		**1727605050** **1727601820**	430	140x15.0x182		17276	8x17276	8xMB/60/1	**8103080007**	**810800J**	64	8x20x15.5-180°
	71-73		•	**1949609580** **1949609530**	**1949605050** **1949601230** **1949601230**	410	223x17.0/11.8x178	**587009J** **587008J**	19496	8x19496	8xMP/36/2	**8162080003**	**810800J**	64	8x20x15.5-180°
2233, 2238 *(L 6x2,L 6x4,S 6x2,S 6x4)* **2032, 2033, 2035, 2036** *(LS 6x2/4,S 6x2/4)* **2228** *(A 6x2,F 6x2,L,L 6x2,LL,LL 6x2, LS 6x2,S 6x2)*	80-91	•	•	**1949409580** **1949409530**	**1949405050** **1949401230** **1949401230**	410	163x17.0/11.8x178	**587009J** **587008J**	19494	8x19494	8xMP/31/2	**8162080001**	**810800J**	64	8x15x15.5-180°
2219 *(LP 6x2,LP 6x4,LPK 6x2,LPK 6x4)*	73-75		•		**1918205380**	418	160x15.7x213		19182	8x19182	8xMB/66/1	**8103080003**	**810800J**	64	8x15x15.5-180°
2219, 2220 *(L 6x2)*	75-91	•	•	**1949409580** **1949409530**	**1949405050** **1949401230** **1949401230**	410	163x17.0/11.8x178	**587009J** **587008J**	19494	8x19494	8xMP/31/2	**8162080001**	**810800J**	64	8x15x15.5-180°
2220 *(L)* **2219** *(B 6x4,K 6x4,KO 6x4,S 6x4)*	84-91	•		**1949409580** **1949409530**	**1949405050** **1949401230** **1949401230**	410	163x17.0/11.8x178	**587009J** **587008J**	19494	8x19494	8xMP/31/2	**8162080001**	**810800J**	64	8x15x15.5-180°
	84-91		•		**1723805380** **1768309530**	410	143x17.0/11.8x178	**587009J** **587008J**	17238	8x17238	8xMP/30/2	**8162080002**	**810800J**	64	8x18x15.5-180°
2220 *(L)*	84-91		•	**1949409580** **1949409530**	**1949405050** **1949401230** **1949401230**	410	163x17.0/11.8x178	**587009J** **587008J**	19494	8x19494	8xMP/31/2	**8162080001**	**810800J**	64	8x15x15.5-180°
2222 *(K 6x4)*	83-91	•			**1723805380** **1768309530**	410	143x17.0/11.8x178	**587009J** **587008J**	17238	8x17238	8xMP/30/2	**8162080002**	**810800J**	64	8x18x15.5-180°
2222 *(B 6x4,K 6x2,K 6x4,L 6x2,L 6x4)* **2225** *(B,Ch.# > 375521,L,L Ch.# 375522 >)*	83-91		•		**1723805380** **1768309530**	410	143x17.0/11.8x178	**587009J** **587008J**	17238	8x17238	8xMP/30/2	**8162080002**	**810800J**	64	8x18x15.5-180°
3235 *(AK 8x4/4,B 8x4/4,K 8x4/4,L 8x4/4)* **2222** *(L 6x2)* **3228** *(B 8x4/4,K 8x4/4)* **2225** *(L)*	83-91		•	**1949609580** **1949609530**	**1949605050** **1949601230** **1949601230**	410	223x17.0/11.8x178	**587009J** **587008J**	19496	8x19496	8xMP/36/2	**8162080003**	**810800J**	64	8x20x15.5-180°
3235 *(AK 8x4/4,B 8x4/4,K 8x4/4,L 8x4/4)* **2222** *(L 6x2)* **3229, 3233** *(B 8x4/4,K 8x4/4)* **2225** *(L)*	83-91	•		**1949509580** **1949509530**	**1949505050** **1949501230** **1949501230**	410	183x17.0/11.8x178	**587009J** **587008J**	19495	8x19495	8xMP/32/2	**8162080002**	**810800J**	64	8x18x15.5-180°
2223, 2224 *(LP 6x2)*	69-74	•	•		**1727605050** **1727601820**	430	140x15.0x182		17276	8x17276	8xMB/60/1	**8103080007**	**810800J**	64	8x20x15.5-180°

© JURID / All rights reserved 2005

© JURID / All rights reserved 2005

Mercedes Benz...

MK / SK...

2223 *(LP 6x2)*															
2224 *(LP 6x2,LP 6x4,LPB 6x4,LPK 6x4, LPS 6x4)*	69-74		•		**1916005050** **1916009530**	440	170x15.0x186		19160	8x19160	8xMB/51/1	**8103080007**	**810800J**	64	8x20x15.5-180°
2224 *(LP 6x4,LPB 6x4,LPK 6x4,LPS 6x4)*	69-74	•			**1727605050** **1727601820**	430	140x15.0x182		17276	8x17276	8xMB/60/1	**8103080007**	**810800J**	64	8x20x15.5-180°
	69-74		•		**1912505450**	370	160x19.4x156		19125	8x19125	8xMB/61/1	**8103080005**	**810800J**	64	8x18x15.5-180°
2226 *(L 6x2,L 6x4,LP 6x2,LP 6x4, LPB 6x2,LPB 6x4,LPK 6x2, LPK 6x4,LPS 6x2,LPS 6x4, LS 6x2,LS 6x4,S 6x2,S 6x4)*	69-91	•	•	**1949409580** **1949409530**	**1949405050** **1949401230** **1949401230**	410	163x17.0/11.8x178	**587009J** **587008J**	19494	8x19494	8xMP/31/2	**8162080001**	**810800J**	64	8x15x15.5-180°
2226 *(LP 6x2,LP 6x4,LPB 6x2,LPB 6x4, LPK 6x2,LPK 6x4,LPS 6x2,LPS 6x4)*	69-91	•	•		**1727605050** **1727601820**	430	140x15.0x182		17276	8x17276	8xMB/60/1	**8103080007**	**810800J**	64	8x20x15.5-180°
2226 *(L 6x2,L 6x4,LP 6x2,LP 6x4,LS 6x2, LS 6x4,S 6x2,S 6x4)*	69-91		•	**1949509580** **1949509530**	**1949505050** **1949501230** **1949501230**	410	183x17.0/11.8x178	**587009J** **587008J**	19495	8x19495	8xMP/32/2	**8162080002**	**810800J**	64	8x18x15.5-180°
2226 *(L 6x2)*	69-91		•	**1949609580** **1949609530**	**1949605050** **1949601230** **1949601230**	410	223x17.0/11.8x178	**587009J** **587008J**	19496	8x19496	8xMP/36/2	**8162080003**	**810800J**	64	8x20x15.5-180°
2226 *(LP Ch.# 886513 > 6x4, LPB Ch.# 886513 > 6x4, LPK Ch.# 886513 > 6x4, LPS Ch.# 886513 > 6x4)*	69-91		•		**1912505450**	370	160x19.4x156		19125	8x19125	8xMB/61/1	**8103080005**	**810800J**	64	8x18x15.5-180°
2232 *(L Ch.# > 886512 6x2, L Ch.# > 886512 6x4, LP Ch.# > 886512 6x2, LP Ch.# > 886512 6x4, LPK Ch.# > 886512 6x2, LPK Ch.# > 886512 6x4, LPL Ch.# > 886512 6x2, LPL Ch.# > 886512 6x4, LPS Ch.# > 886512 6x2, LPS Ch.# > 886512 6x4, LS Ch.# > 886512 6x2, LS Ch.# > 886512 6x4, S Ch.# > 886512 6x2, S Ch.# > 886512 6x4)*	73-86	•	•	**1949409580** **1949409530**	**1949405050** **1949401230** **1949401230**	410	163x17.0/11.8x178	**587009J** **587008J**	19494	8x19494	8xMP/31/2	**8162080001**	**810800J**	64	8x15x15.5-180°
2232 *(LP Ch.# > 886512 6x2, LP Ch.# > 886512 6x4, LPK Ch.# > 886512 6x2, LPK Ch.# > 886512 6x4, LPL Ch.# > 886512 6x2, LPL Ch.# > 886512 6x4, LPS Ch.# > 886512 6x2, LPS Ch.# > 886512 6x4)*	73-86	•	•		**1727605050** **1727601820**	430	140x15.0x182		17276	8x17276	8xMB/60/1	**8103080007**	**810800J**	64	8x20x15.5-180°
2232 *(L 6x2)*	73-86	•		**1949409580** **1949409530**	**1949405050** **1949401230** **1949401230**	410	163x17.0/11.8x178	**587009J** **587008J**	19494	8x19494	8xMP/31/2	**8162080001**	**810800J**	64	8x15x15.5-180°
2232 *(L 6x4,LS 6x4,S 6x4)*	73-86		•	**1949409580** **1949409530**	**1949405050** **1949401230** **1949401230**	410	163x17.0/11.8x178	**587009J** **587008J**	19494	8x19494	8xMP/31/2	**8162080001**	**810800J**	64	8x15x15.5-180°
2232 *(L 6x2,L 6x4,LP 6x2,LP 6x4, LPL 6x2,LPL 6x4,LS 6x2,LS 6x4, S 6x2,S 6x4)*	73-86		•	**1949509580** **1949509530**	**1949505050** **1949501230** **1949501230**	410	183x17.0/11.8x178	**587009J** **587008J**	19495	8x19495	8xMP/32/2	**8162080002**	**810800J**	64	8x18x15.5-180°

© JURID / All rights reserved 2005

© JURID / All rights reserved 2005

Mercedes Benz...

...

MK / SK...

2232 *(L 6x2,L 6x4,LS 6x2,LS 6x4,S 6x2, S 6x4)*	73-86		•	**1949609580** **1949609530**	**1949605050** **1949601230** **1949601230**	410	223x17.0/11.8x178	**587009J** **587008J**	19496	8x19496	8xMP/36/2	**8162080003**	**810800J**	64	8x20x15.5-180°
2232 *(L 6x4,LS 6x4,S 6x4)*	73-86		•		**1723805380** **1768309530**	410	143x17.0/11.8x178	**587009J** **587008J**	17238	8x17238	8xMP/30/2	**8162080002**	**810800J**	64	8x18x15.5-180°
2232 *(B 6x4,K 6x4,LP 6x4,LPB 6x4, LPK 6x4,LPS 6x4)*	73-86		•		**1912505450**	370	160x19.4x156		19125	8x19125	8xMB/61/1	**8103080005**	**810800J**	64	8x18x15.5-180°
2232 *(LP 6x2,LPL 6x2)*	73-86		•		**1916005050** **1916009530**	440	170x15.0x186		19160	8x19160	8xMB/51/1	**8103080007**	**810800J**	64	8x20x15.5-180°
2244 *(L 6x2,L 6x4,LL 6x2,LL 6x4, LS 6x2,LS 6x4,S 6x2,S 6x4)*	87-91	•	•	**1949409580** **1949409530**	**1949405050** **1949401230** **1949401230**	410	163x17.0/11.8x178	**587009J** **587008J**	19494	8x19494	8xMP/31/2	**8162080001**	**810800J**	64	8x15x15.5-180°
2235 *(K 6x2,K 6x4,L 6x2,L 6x4,LS 6x2, LS 6x4,S 6x2,S 6x4)*	87-91		•	**1949509580** **1949509530**	**1949505050** **1949501230** **1949501230**	410	183x17.0/11.8x178	**587009J** **587008J**	19495	8x19495	8xMP/32/2	**8162080002**	**810800J**	64	8x18x15.5-180°
2320 *(L 6x2)* **2244** *(L 6x2,L 6x4,LL 6x2,LL 6x4, LS 6x2,LS 6x4,S 6x2,S 6x4)* **2235** *(K 6x2,K 6x4,L 6x2,L 6x4,LS 6x2, LS 6x4,S 6x2,S 6x4)*	87-91		•	**1949609580** **1949609530**	**1949605050** **1949601230** **1949601230**	410	223x17.0/11.8x178	**587009J** **587008J**	19496	8x19496	8xMP/36/2	**8162080003**	**810800J**	64	8x20x15.5-180°
2244 *(L 6x2,L 6x4,LL 6x2,LL 6x4, LS 6x2,LS 6x4,S 6x2,S 6x4)* **2320, 2327** *(L 6x2)* **2235** *(K 6x2,K 6x4,L 6x2,L 6x4,LS 6x2, LS 6x4,S 6x2,S 6x4)*	87-91		•	**1949409580** **1949409530**	**1949405050** **1949401230** **1949401230**	410	163x17.0/11.8x178	**587009J** **587008J**	19494	8x19494	8xMP/31/2	**8162080001**	**810800J**	64	8x15x15.5-180°
2236 *(L 6x2,L 6x4,LS 6x2,LS 6x4,S 6x2, S 6x4)*	82-91	•	•	**1949409580** **1949409530**	**1949405050** **1949401230** **1949401230**	410	163x17.0/11.8x178	**587009J** **587008J**	19494	8x19494	8xMP/31/2	**8162080001**	**810800J**	64	8x15x15.5-180°
2236 *(LS 6x4,S 6x4)*	82-91		•	**1949509580** **1949509530**	**1949505050** **1949501230** **1949501230**	410	183x17.0/11.8x178	**587009J** **587008J**	19495	8x19495	8xMP/32/2	**8162080002**	**810800J**	64	8x18x15.5-180°
2236 *(L 6x2,L 6x4,LS 6x2,LS 6x4,S 6x2, S 6x4)*	82-91		•	**1949409580** **1949409530**	**1949405050** **1949401230** **1949401230**	410	163x17.0/11.8x178	**587009J** **587008J**	19494	8x19494	8xMP/31/2	**8162080001**	**810800J**	64	8x15x15.5-180°
	82-91		•	**1949609580** **1949609530**	**1949605050** **1949601230** **1949601230**	410	223x17.0/11.8x178	**587009J** **587008J**	19496	8x19496	8xMP/36/2	**8162080003**	**810800J**	64	8x20x15.5-180°
2320 *(L 6x2)*	87-91	•		**1949409580** **1949409530**	**1949405050** **1949401230** **1949401230**	410	163x17.0/11.8x178	**587009J** **587008J**	19494	8x19494	8xMP/31/2	**8162080001**	**810800J**	64	8x15x15.5-180°
2320, 2327 *(L 6x2)*	87-91	•		**1949509580** **1949509530**	**1949505050** **1949501230** **1949501230**	410	183x17.0/11.8x178	**587009J** **587008J**	19495	8x19495	8xMP/32/2	**8162080002**	**810800J**	64	8x18x15.5-180°
2428 *(A,L)* **2435** *(L 6x2/4,LS 6x2/4,S 6x2/4)* **2438, 2444** *(L 6x2,LS 6x2)* **2432, 2433** *(L 6x2)* **2422** *(6x2,6x4,K 6x2,K 6x4)*	89-91	•	•	**1949409580** **1949409530**	**1949405050** **1949401230** **1949401230**	410	163x17.0/11.8x178	**587009J** **587008J**	19494	8x19494	8xMP/31/2	**8162080001**	**810800J**	64	8x15x15.5-180°

JURID by Honeywell

© JURID / All rights reserved 2005

© JURID / All rights reserved 2005

JURID by Honeywell

Mercedes Benz...

...

MK / SK...

2624 *(LA 6x6,LAB 6x6,LAK 6x6,LAS 6x6)*	69-73	•		**1728505050**	440	140x10.0x191		17285	8x17285	8xBC/2/1	**8103080007**	**810800J**	64	8x20x15.5-180°
2626 *(B 6x4,K 6x4,S 6x4)* **2624** *(A 6x4,A 6x6,AK 6x4,AK 6x6,L 6x4, L 6x6,LK 6x4,LK 6x6,LS 6x4, LS 6x6)*	73-88	•		**1723805050** **1768309530**	410	143x17.0/11.8x178	**587009J** **587008J**	17238	8x17238	8xMP/30/2	**8162080002**	**810800J**	64	8x18x15.5-180°
2632 *(K 6x4,S 6x4)* **2633** *(LS 6x4,S 6x4)* **2628** *(B 6x4,B 6x6,K 6x4,K 6x6,L 6x4, L 6x6,LK 6x4,LK 6x6,LS 6x4, LS 6x6,S 6x4,S 6x6)*	73-88	•	•	**1949409580** **1949409530**	**1949405050** **1949401230** **1949401230**	410	163x17.0/11.8x178	**587009J** **587008J**	19494	8x19494	8xMP/31/2	**8162080001**	**810800J**	64	8x15x15.5-180°
3636, 3833, 3835, 4836, 4853, 5035, 5436, 6036 **3544** *(AK 8x4/4,K 8x4/4,LK 8x4/4, LS 8x4/4,S 8x4/4)* **5038** *(A,K)* **3836, 4436** *(AK)* **4445, 4635, 4644, 4645, 4648, 4850** *(A,AK)* **4844** *(A,K,S)* **2629** *(A 6x6,AK 6x6,AS 6x6)* **3548, 3550** *(A 8x4/4,K 8x4/4,S 8x4/4)* **2635** *(A 6x4,A 6x6,AK 6x4,AK 6x6, AS 6x4,AS 6x6,LS 6x4,LS 6x6, S 6x4,S 6x6)* **4044** *(S)* **3850** *(A 6x6,A 8x4/4,A 8x8,AS 6x6, AS 8x4/4,AS 8x8)* **3553** *(L,LS,S)* **5053, 5248** *(K,S)* **4150** *(K)*	89-	•		**1949509580** **1949509530**	**1949505050** **1949501230** **1949501230**	410	183x17.0/11.8x178	**587009J** **587008J**	19495	8x19495	8xMP/32/2	**8162080002**	**810800J**	64	8x18x15.5-180°

© JURID / All rights reserved 2005

© JURID / All rights reserved 2005

Mercedes Benz...

...

MK / SK...

3636, 3833, 3835, 4836, 4853, 5035, 5436, 6036 **4445, 4635, 4644, 4645, 4648, 4850** *(A,AK)* **5038***(A,K)* **4844***(A,K,S)* **3836, 4436***(AK)* **3544***(A 8x4/4,AK 8x4/4,K 8x4/4)* **3553***(LS,S)* **2629, 2635***(A 6x6,AK 6x6,AS 6x6)* **3548, 3550** *(A 8x4/4,K 8x4/4,S 8x4/4)* **4044***(S)* **3850** *(A 6x6,A 8x4/4,A 8x8,AS 6x6, AS 8x4/4,AS 8x8)* **5053, 5248***(K,S)*	89-	•	**1949409580** **1949409530**	**1949405050** **1949401230** **1949401230**	410	163x17.0/11.8x178	**587009J** **587008J**	19494	8x19494	8xMP/31/2	**8162080001**	**810800J**	64	8x15x15.5-180°
3636, 3833, 3835, 4836, 4853, 5035, 5436, 6036	89-	•	**1949409580** **1949409530**	**1949405050** **1949401230** **1949401230**	410	163x17.0/11.8x178	**587009J** **587008J**	19494	8x19494	8xMP/31/2	**8162080001**	**810800J**	64	8x15x15.5-180°
3544 *(AK 8x4/4,K 8x4/4,LK 8x4/4, LS 8x4/4,S 8x4/4)* **5038***(A,K)* **3836, 4436***(AK)* **4445, 4635, 4644, 4645, 4648, 4850** *(A,AK)* **4844***(A,K,S)* **2629***(A 6x6,AK 6x6,AS 6x6)* **3548, 3550** *(A 8x4/4,K 8x4/4,S 8x4/4)* **2635** *(A 6x4,A 6x6,AK 6x4,AK 6x6, AS 6x4,AS 6x6,LS 6x4,LS 6x6, S 6x4,S 6x6)* **4044***(S)* **3553***(L,LS,S)* **5053, 5248***(K,S)* **4150***(K)*	89-	•	**1949609580** **1949609530**	**1949605050** **1949601230** **1949601230**	410	223x17.0/11.8x178	**587009J** **587008J**	19496	8x19496	8xMP/36/2	**8162080003**	**810800J**	64	8x20x15.5-180°

© JURID / All rights reserved 2005

© JURID / All rights reserved 2005

Mercedes Benz...

MK / SK...

4836, 4853, 5035, 5436, 6036 **4844, 5038***(A,K)* **4150***(K)* **4445, 4635, 4644, 4645, 4648, 4850** *(A,AK)* **2629, 2635***(A 6x6,AK 6x6,AS 6x6)* **3548, 3550** *(A 8x4/4,K 8x4/4,S 8x4/4)* **3553***(L,LS,S)* **5053, 5248***(K,S)* **3544** *(A 8x4/4,AK 8x4/4,K 8x4/4, LK 8x4/4,LS 8x4/4,S 8x4/4)* **3836, 4436***(AK)*	89-	•		**1949509580** **1949509530**	**1949505050** **1949501230** **1949501230**	410	183x17.0/11.8x178	**587009J** **587008J**	19495	8x19495	8xMP/32/2	**8162080002**	**810800J**	64	8x18x15.5-180°
2632*(S 6x4,S 6x6)*	73-88		•		**1989603270** **1989609530**	420	178x18.5x197		19896	8x19896	8xAX/14/6	**8158056001**	**810635J**	112	6.35x14.29x11.9-150°(L9/10-9)
2635 *(A 6x4,A 6x6,AK 6x4,AK 6x6, AS 6x4,AS 6x6,LS 6x4,LS 6x6, S 6x4,S 6x6)* **3544***(A 8x4/4,AK 8x4/4,K 8x4/4)*	89-	•	•	**1949409580** **1949409530**	**1949405050** **1949401230** **1949401230**	410	163x17.0/11.8x178	**587009J** **587008J**	19494	8x19494	8xMP/31/2	**8162080001**	**810800J**	64	8x15x15.5-180°
2636*(K 6x4,L 6x4,LS 6x4,S 6x4)*	82-88	•	•	**1949409580** **1949409530**	**1949405050** **1949401230** **1949401230**	410	163x17.0/11.8x178	**587009J** **587008J**	19494	8x19494	8xMP/31/2	**8162080001**	**810800J**	64	8x15x15.5-180°
2636 *(A 6x6,K 6x4,L 6x4,LS 6x4,S 6x4)*	82-88	•		**1949509580** **1949509530**	**1949505050** **1949501230** **1949501230**	410	183x17.0/11.8x178	**587009J** **587008J**	19495	8x19495	8xMP/32/2	**8162080002**	**810800J**	64	8x18x15.5-180°
2636 *(A 6x4,A 6x6,AK 6x4,AK 6x6, AS 6x4,AS 6x6,K 6x4,K 6x6,L 6x4, L 6x6,LS 6x4,LS 6x6,S 6x4,S 6x6)*	82-88		•	**1949609580** **1949609530**	**1949605050** **1949601230** **1949601230**	410	223x17.0/11.8x178	**587009J** **587008J**	19496	8x19496	8xMP/36/2	**8162080003**	**810800J**	64	8x20x15.5-180°
2638*(S 6x4)*	81-88	•	•	**1949409580** **1949409530**	**1949405050** **1949401230** **1949401230**	410	163x17.0/11.8x178	**587009J** **587008J**	19494	8x19494	8xMP/31/2	**8162080001**	**810800J**	64	8x15x15.5-180°
2638*(A 6x4,AK 6x4,AS 6x4,LA 6x4)*	81-88	•		**1949509580** **1949509530**	**1949505050** **1949501230** **1949501230**	410	183x17.0/11.8x178	**587009J** **587008J**	19495	8x19495	8xMP/32/2	**8162080002**	**810800J**	64	8x18x15.5-180°
2638*(A 6x4,AK 6x4,AS 6x4,LA 6x4)* **2822, 2825, 2828, 2833**	81-88	•		**1949409580** **1949409530**	**1949405050** **1949401230** **1949401230**	410	163x17.0/11.8x178	**587009J** **587008J**	19494	8x19494	8xMP/31/2	**8162080001**	**810800J**	64	8x15x15.5-180°
2822, 2825, 2828, 2833	81-88		•	**1949409580** **1949409530**	**1949405050** **1949401230** **1949401230**	410	163x17.0/11.8x178	**587009J** **587008J**	19494	8x19494	8xMP/31/2	**8162080001**	**810800J**	64	8x15x15.5-180°
2638 *(A 6x4,AK 6x4,AS 6x4,LA 6x4, S 6x4)*	81-88		•	**1949509580** **1949509530**	**1949505050** **1949501230** **1949501230**	410	183x17.0/11.8x178	**587009J** **587008J**	19495	8x19495	8xMP/32/2	**8162080002**	**810800J**	64	8x18x15.5-180°
	81-88		•	**1949609580** **1949609530**	**1949605050** **1949601230** **1949601230**	410	223x17.0/11.8x178	**587009J** **587008J**	19496	8x19496	8xMP/36/2	**8162080003**	**810800J**	64	8x20x15.5-180°
2644, 2645*(LS 6x4,S 6x4,SR 6x4)*	87-89	•	•	**1949409580** **1949409530**	**1949405050** **1949401230** **1949401230**	410	163x17.0/11.8x178	**587009J** **587008J**	19494	8x19494	8xMP/31/2	**8162080001**	**810800J**	64	8x15x15.5-180°

© JURID / All rights reserved 2005

© JURID / All rights reserved 2005

Mercedes Benz...

MK / SK...

2644, 2645 *(A 6x4,AF 6x4,AK 6x4,AS 6x4)*	87-89	•	**1949409580** **1949409530**	**1949405050** **1949401230** **1949401230**	410	163x17.0/11.8x178	**587009J** **587008J**	19494	8x19494	8xMP/31/2	**8162080001**	**810800J**	64	8x15x15.5-180°
	87-89	•	**1949509580** **1949509530**	**1949505050** **1949501230** **1949501230**	410	183x17.0/11.8x178	**587009J** **587008J**	19495	8x19495	8xMP/32/2	**8162080002**	**810800J**	64	8x18x15.5-180°
2644, 2645 *(A 6x4,AF 6x4,AK 6x4,AS 6x4, LS 6x4,S 6x4,SR 6x4)*	87-89	•	**1949409580** **1949409530**	**1949405050** **1949401230** **1949401230**	410	163x17.0/11.8x178	**587009J** **587008J**	19494	8x19494	8xMP/31/2	**8162080001**	**810800J**	64	8x15x15.5-180°
2644, 2645 *(A 6x4,AF 6x4,AK 6x4,AS 6x4, LS 6x4,S 6x4)*	87-89	•	**1949509580** **1949509530**	**1949505050** **1949501230** **1949501230**	410	183x17.0/11.8x178	**587009J** **587008J**	19495	8x19495	8xMP/32/2	**8162080002**	**810800J**	64	8x18x15.5-180°
	87-89	•	**1949609580** **1949609530**	**1949605050** **1949601230** **1949601230**	410	223x17.0/11.8x178	**587009J** **587008J**	19496	8x19496	8xMP/36/2	**8162080003**	**810800J**	64	8x20x15.5-180°
2822, 2825, 2828, 2833	81-88	•		**1723805380** **1768309530**	410	143x17.0/11.8x178	**587009J** **587008J**	17238	8x17238	8xMP/30/2	**8162080002**	**810800J**	64	8x18x15.5-180°
3035, 3036 **3536** *(A 8x4/4,AK 8x4/4,K 8x4/4,S 8x4/4)* **3038, 3050***(S 6x4)* **3053***(A,S)* **3025, 3028, 3033***(B 8x4/4,K 8x4/4)*	83-88	•	**1949409580** **1949409530**	**1949405050** **1949401230** **1949401230**	410	163x17.0/11.8x178	**587009J** **587008J**	19494	8x19494	8xMP/31/2	**8162080001**	**810800J**	64	8x15x15.5-180°
3035, 3036 **3038, 3050***(L 6x4,S 6x4)* **3053***(A,S)* **3025, 3028, 3033***(B 8x4/4,K 8x4/4)* **3536** *(A 8x4/4,AK 8x4/4,K 8x4/4,S 8x4/4)*	83-88	•	**1949509580** **1949509530**	**1949505050** **1949501230** **1949501230**	410	183x17.0/11.8x178	**587009J** **587008J**	19495	8x19495	8xMP/32/2	**8162080002**	**810800J**	64	8x18x15.5-180°
3536 *(A 8x4/4,AK 8x4/4,K 8x4/4,S 8x4/4)* **3025, 3028, 3033***(B 8x4/4,K 8x4/4)*	83-88	•		**1723805380** **1768309530**	410	143x17.0/11.8x178	**587009J** **587008J**	17238	8x17238	8xMP/30/2	**8162080002**	**810800J**	64	8x18x15.5-180°
3035, 3036 **3053***(A)* **3025***(B 8x4/4,K 8x4/4)* **3536** *(A 8x4/4,AK 8x4/4,K 8x4/4,S 8x4/4)*	83-88	•	**1949409580** **1949409530**	**1949405050** **1949401230** **1949401230**	410	163x17.0/11.8x178	**587009J** **587008J**	19494	8x19494	8xMP/31/2	**8162080001**	**810800J**	64	8x15x15.5-180°
3035, 3036 **3038, 3050***(L 6x4,S 6x4)* **3053***(A,S)* **3028, 3033***(B 8x4/4,K 8x4/4)* **3536** *(A 8x4/4,AK 8x4/4,K 8x4/4,S 8x4/4)*	83-88	•	**1949609580** **1949609530**	**1949605050** **1949601230** **1949601230**	410	223x17.0/11.8x178	**587009J** **587008J**	19496	8x19496	8xMP/36/2	**8162080003**	**810800J**	64	8x20x15.5-180°
3036 **3038, 3050***(L 6x4,S 6x4)* **4050***(A 8x8)* **3028, 3033***(B 8x4/4,K 8x4/4)* **3536** *(A 8x4/4,AK 8x4/4,K 8x4/4,S 8x4/4)*	83-88	•	**1949409580** **1949409530**	**1949405050** **1949401230** **1949401230**	410	163x17.0/11.8x178	**587009J** **587008J**	19494	8x19494	8xMP/31/2	**8162080001**	**810800J**	64	8x15x15.5-180°

JURID by Honeywell

© JURID / All rights reserved 2005

© JURID / All rights reserved 2005

JURID by Honeywell

Mercedes Benz...

...

MK / SK...

3036 **3536** *(A 8x4/4,AK 8x4/4,K 8x4/4,S 8x4/4)* **3038, 3050** *(S 6x4)* **3053** *(A,S)*	83-88	•		**1949509580** **1949509530**	**1949505050** **1949501230** **1949501230**	410	183x17.0/11.8x178	**587009J** **587008J**	19495	8x19495	8xMP/32/2	**8162080002**	**810800J**	64	8x18x15.5-180°
3228, 3229, 3233 *(B 8x4/4,K 8x4/4)*	83-91		•		**1723805050** **1768309530**	410	143x17.0/11.8x178	**587009J** **587008J**	17238	8x17238	8xMP/30/2	**8162080002**	**810800J**	64	8x18x15.5-180°
3235 *(AK 8x4/4,B 8x4/4,K 8x4/4,L 8x4/4)*	83-91	•	•	**1949409580** **1949409530**	**1949405050** **1949401230** **1949401230**	410	163x17.0/11.8x178	**587009J** **587008J**	19494	8x19494	8xMP/31/2	**8162080001**	**810800J**	64	8x15x15.5-180°
3328, 3335 *(A 8x4/4,AK 8x4/4,B 8x4/4,K 8x4/4)* **3332, 3338, 3344** **3336** *(A,AK,B,K,S)* **3534, 3540** *(K)* **3538** *(A 8x4/4,AK 8x4/4,K 8x4/4)* **3528, 3529** *(A,AK,B,K)* **3333** *(AK,B,K)* **3535** *(A 8x4/4,AB 8x4/4,AK 8x4/4,* *B 8x4/4,K 8x4/4,S 8x4/4)* **3238, 3240, 3244, 3248, 3253, 3255** *(8x4/4)* **3250** *(A 6x6,A 8x8,L)*	91-		•	**1949409580** **1949409530**	**1949405050** **1949401230** **1949401230**	410	163x17.0/11.8x178	**587009J** **587008J**	19494	8x19494	8xMP/31/2	**8162080001**	**810800J**	64	8x15x15.5-180°
3328, 3335 *(A 8x4/4,AK 8x4/4,B 8x4/4,K 8x4/4)* **3332, 3338, 3344** **3250** *(A 6x6,A 8x8,AF 6x6,AF 8x8,L 6x6,* *L 8x8)* **3534, 3540** *(K)* **3538** *(A 8x4/4,AK 8x4/4,K 8x4/4)* **3528, 3529** *(A,AK,B,K)* **3333** *(AK,B,K)* **3336** *(A,AK,B,K,S)* **3535** *(A 8x4/4,AB 8x4/4,AK 8x4/4,* *B 8x4/4,K 8x4/4,S 8x4/4)* **3238, 3240, 3244, 3248, 3253, 3255** *(8x4/4)*	91-		•	**1949509580** **1949509530**	**1949505050** **1949501230** **1949501230**	410	183x17.0/11.8x178	**587009J** **587008J**	19495	8x19495	8xMP/32/2	**8162080002**	**810800J**	64	8x18x15.5-180°

© JURID / All rights reserved 2005

© JURID / All rights reserved 2005

Mercedes Benz...

...

MK / SK...

3328, 3335 *(A 8x4/4,AK 8x4/4,B 8x4/4,K 8x4/4)* **3332, 3338, 3344** **3336***(A,AK,B,K,S)* **3250***(A 6x6,A 8x8)* **3534, 3540***(K)* **3538***(A 8x4/4,AK 8x4/4,K 8x4/4)* **3528, 529***(A,AK,B,K)* **3333***(AK,B,K)* **3535** *(A 8x4/4,AB 8x4/4,AK 8x4/4, B 8x4/4,K 8x4/4,S 8x4/4)* **3238, 3240, 3244, 3248, 3253, 3255** *(8x4/4)*	91-	•	**1949609580** **1949609530**	**1949605050** **1949601230** **1949601230**	410	223x17.0/11.8x178	**587009J** **587008J**	19496	8x19496	8xMP/36/2	**8162080003**	**810800J**	64	8x20x15.5-180°
3250 *(A 6x6,A 8x8,AF 6x6,AF 8x8,L 6x6, L 8x8)* **3534, 3540***(K)* **3538***(A 8x4/4,AK 8x4/4,K 8x4/4)* **3528, 3529***(A,AK,B,K)* **3336***(A,AK,B,K,S)* **3535** *(A 8x4/4,AB 8x4/4,AK 8x4/4, B 8x4/4,K 8x4/4,S 8x4/4)* **3238, 3240, 3244, 3248, 3253, 3255** *(8x4/4)* **3328, 3335** *(A 8x4/4,B 8x4/4,K 8x4/4)*	91-	•	**1949509580** **1949509530**	**1949505050** **1949501230** **1949501230**	410	183x17.0/11.8x178	**587009J** **587008J**	19495	8x19495	8xMP/32/2	**8162080002**	**810800J**	64	8x18x15.5-180°
3328, 3335 *(A 8x4/4,AK 8x4/4,B 8x4/4,K 8x4/4)* **3332, 3338, 3344** **3336***(A,AK,B,K,S)* **3538***(A 8x4/4,AK 8x4/4,K 8x4/4)* **3528, 3529***(A,AK,B,K)* **3333***(AK,B,K)* **3535** *(A 8x4/4,AB 8x4/4,AK 8x4/4, B 8x4/4,K 8x4/4,S 8x4/4)* **3238, 3244, 3253***(8x4/4)* **3250***(A 6x6,A 8x8,AF 6x6,AF 8x8)*	91-	•	**1949409580** **1949409530**	**1949405050** **1949401230** **1949401230**	410	163x17.0/11.8x178	**587009J** **587008J**	19494	8x19494	8xMP/31/2	**8162080001**	**810800J**	64	8x15x15.5-180°
3238, 3244, 3253*(8x4/4)* **3328, 3335** *(A 8x4/4,AK 8x4/4,B 8x4/4,K 8x4/4)* **3336***(B,K,S)*	91-	• •	**1949409580** **1949409530**	**1949405050** **1949401230** **1949401230**	410	163x17.0/11.8x178	**587009J** **587008J**	19494	8x19494	8xMP/31/2	**8162080001**	**810800J**	64	8x15x15.5-180°

© JURID / All rights reserved 2005

© JURID / All rights reserved 2005

				→STOCK	STOCK→	∅ mm				WVA	BFMC	JURID	SUPASET	#	

Mercedes Benz...

...

MK / SK...															
4836 **4436** *(AK)*	89-		•		**1723805380** **1768309530**	410	143x17.0/11.8x178	**587009J** **587008J**	17238	8x17238	8xMP/30/2	**8162080002**	**810800J**	64	8x18x15.5-180°
Powerliner															
1814	89-	•	•		**1723805380** **1768309530**	410	143x17.0/11.8x178	**587009J** **587008J**	17238	8x17238	8xMP/30/2	**8162080002**	**810800J**	64	8x18x15.5-180°
	89-	•			**1723805380** **1768309530**	410	143x17.0/11.8x178	**587009J** **587008J**	17238	8x17238	8xMP/30/2	**8162080002**	**810800J**	64	8x18x15.5-180°
1814, 2538, 2539 **2635** *(A 6x4,A 6x6,AK 6x4,AK 6x6, AS 6x4,AS 6x6,K 6x4,K 6x6,L 6x4, L 6x6,LS 6x4,LS 6x6,S 6x4,S 6x6)* **2638** *(K 6x4,L 6x4,LK 6x4,LS 6x4,S 6x4)* **2527** *(L 6x2,L 6x2/4,L 6x4)* **2536** *(A 6x4,AK 6x4,K 6x4)* **1816, 1820, 1821, 1824, 1827** *(AK)* **2548, 2550** *(L,LS)* **1831, 1834, 1835** *(AK,L,LS,S)* **1840, 1844, 1850, 1853** *(AK,F,K,L,LAK,LS,S)* **2544** *(A,K,L,LK,LS,S)* **2639, 2644** *(K 6x4,LK 6x4,LS 6x4,S 6x4)* **2522, 2531** *(L 6x2)* **2631, 2634** *(A 6x4,A 6x6,AK 6x4,AK 6x6, AS 6x4,AS 6x6,K 6x4,K 6x6,L 6x4, L 6x6,LK 6x4,LK 6x6)* **2529** *(6x4)* **2524** *(K 6x2,K 6x4,L 6x2,L 6x4)* **2528** *(A 6x4,AK 6x4)* **2648, 2653** *(AK,AS,K,L,LS,S)* **1838** *(A,AK,K,L,LAK,LS,S)*	89-		•	**1949509580** **1949509530**	**1949505050** **1949501230** **1949501230**	410	183x17.0/11.8x178	**587009J** **587008J**	19495	8x19495	8xMP/32/2	**8162080002**	**810800J**	64	8x18x15.5-180°

JURID by Honeywell
© JURID / All rights reserved 2005
© JURID / All rights reserved 2005
JURID by Honeywell

Mercedes Benz...

...

Powerliner...

1814, 2538, 2539 **2635** *(A 6x4,A 6x6,AK 6x4,AK 6x6, AS 6x4,AS 6x6,K 6x4,K 6x6,L 6x4, L 6x6,LS 6x4,LS 6x6,S 6x4,S 6x6)* **2639, 2644** *(K 6x4,LK 6x4,LS 6x4,S 6x4)* **1831, 1834, 1835***(AK)* **2638** *(K 6x4,L 6x4,LK 6x4,LS 6x4,S 6x4)* **2531***(L 6x2)* **2527***(L 6x2,L 6x2/4)* **2544***(A,K,L,LK,LS,S)* **2648, 2653***(AK,AS,K,L,LS,S)* **1838***(A,AK,K,L,LAK,LS,S)* **2631, 2634** *(A 6x4,A 6x6,AK 6x4,AK 6x6, AS 6x4,AS 6x6,K 6x4,K 6x6,L 6x4, L 6x6,LK 6x4,LK 6x6)* **2529***(6x4)* **2524***(K 6x2,K 6x4,L 6x2,L 6x4)* **1840, 1844, 1850, 1853***(AK,F,LAK)* **2528***(A 6x4,AK 6x4)*	89-	•	**1949409580** **1949409530**	**1949405050** **1949401230** **1949401230**	410	163x17.0/11.8x178	**587009J** **587008J**	19494	8x19494	8xMP/31/2	**8162080001**	**810800J**	64	8x15x15.5-180°
1814, 2538, 2539 **1831, 1834, 1835***(AK,LAS)* **2544***(A,K,L,LK,LS,S)* **1838***(AK,LAK)* **1840, 1844, 1850, 1853***(AK,F,LAK)* **2531***(L 6x2)*	89-	•	**1949409580** **1949409530**	**1949405050** **1949401230** **1949401230**	410	163x17.0/11.8x178	**587009J** **587008J**	19494	8x19494	8xMP/31/2	**8162080001**	**810800J**	64	8x15x15.5-180°
1814 **2524***(K 6x2,K 6x4,L 6x2,L 6x4)*	89-	•		**1723805380** **1768309530**	410	143x17.0/11.8x178	**587009J** **587008J**	17238	8x17238	8xMP/30/2	**8162080002**	**810800J**	64	8x18x15.5-180°

© JURID / All rights reserved 2005

© JURID / All rights reserved 2005

Mercedes Benz...

...

Powerliner...

2538, 2539 **2631, 2634** *(A 6x4,A 6x6,AK 6x4,AK 6x6, AS 6x4,AS 6x6,K 6x4,L 6x4,LK 6x4)* **2638** *(K 6x4,L 6x4,LK 6x4,LS 6x4,S 6x4)* **2527***(L 6x2,L 6x2/4,L 6x4)* **2635** *(A 6x6,AK 6x6,AS 6x6,K 6x4, K 6x6,L 6x4,L 6x6,LS 6x4,LS 6x6, S 6x4,S 6x6)* **2536***(A 6x4,AK 6x4,K 6x4)* **2548, 2550***(L,LS)* **1840, 1844, 1850, 1853** *(AK,F,K,L,LAK,LS,S)* **2531***(6x2,L 6x2)* **2544***(A,K,L,LK,LS,S)* **2639, 2644** *(K 6x4,LK 6x4,LS 6x4,S 6x4)* **1838***(A,AK,K,L,LAK,LS,S)* **1831, 1834, 1835***(AK,K,L,LS)* **2529***(6x4)* **2524***(K 6x2,K 6x4,L 6x2,L 6x4)* **2528***(A 6x4,AK 6x4)* **1816, 1820, 1821, 1824, 1827** *(K,L,LS,S)* **2648, 2653***(AK,AS,K,L,LS,S)* **2522***(L 6x2)*	89-	•	**1949509580** **1949509530**	**1949505050** **1949501230** **1949501230**	410	183x17.0/11.8x178	**587009J** **587008J**	19495	8x19495	8xMP/32/2	**8162080002**	**810800J**	64	8x18x15.5-180°

© JURID / All rights reserved 2005

© JURID / All rights reserved 2005

			→STOCK	STOCK→	∅ mm				WVA	BFMC	JURID	SUPASET	#	

Mercedes Benz...

...

Powerliner...

2538, 2539 **2635** *(A 6x4,A 6x6,AK 6x4,AK 6x6, AS 6x4,AS 6x6,K 6x4,K 6x6,L 6x4, L 6x6,LS 6x4,LS 6x6,S 6x4,S 6x6)* **1816, 1820, 1821, 1824, 1827** *(AK,K,L,LAK,LAS,LS,S)* **1831, 1834, 1835***(AK,K,L,LAS,LS)* **2527***(L 6x2,L 6x2/4,L 6x4)* **2536***(A 6x4,AK 6x4,K 6x4)* **2548, 2550***(L,LS)* **1840, 1844, 1850, 1853** *(AK,F,K,L,LAK,LS,S)* **2638** *(K 6x4,L 6x4,LK 6x4,LS 6x4,S 6x4)* **2544***(A,K,L,LK,LS,S)* **2639, 2644** *(K 6x4,LK 6x4,LS 6x4,S 6x4)* **1838***(A,AK,K,L,LAK,LS,S)* **2631, 2634** *(A 6x4,A 6x6,AK 6x4,AK 6x6, AS 6x4,AS 6x6,K 6x4,K 6x6,L 6x4, L 6x6,LK 6x4,LK 6x6)* **2529***(6x4)* **2524***(K 6x2,K 6x4,L 6x2,L 6x4)* **2528***(A 6x4,AK 6x4)* **2648, 2653***(AK,AS,K,L,LS,S)* **2522, 2531***(L 6x2)*	89-	•	**1949609580** **1949609530**	**1949605050** **1949601230** **1949601230**	410	223x17.0/11.8x178	**587009J** **587008J**	19496	8x19496	8xMP/36/2	**8162080003**	**810800J**	64	8x20x15.5-180°
2538, 2539 **1816, 1820, 1821, 1824, 1827** *(AK,LAS)* **1840, 1844, 1850, 1853** *(AK,F,LAK,LAS)* **2544***(A,K,L,LS)* **1831, 1834, 1835***(AK)* **2635***(A 6x6,AK 6x6,AS 6x6)* **2648, 2653***(AK,AS,K,L,LS,S)* **2631, 2634** *(A 6x4,A 6x6,AK 6x4,AK 6x6, AS 6x4,AS 6x6)* **2529***(6x4)* **2531***(6x2)* **2536***(A 6x4,AK 6x4,K 6x4)* **1838***(AK,LAK)* **2528***(A 6x4,AK 6x4)*	89-	•	**1949409580** **1949409530**	**1949405050** **1949401230** **1949401230**	410	163x17.0/11.8x178	**587009J** **587008J**	19494	8x19494	8xMP/31/2	**8162080001**	**810800J**	64	8x15x15.5-180°

JURID by Honeywell
© JURID / All rights reserved 2005
© JURID / All rights reserved 2005
JURID by Honeywell

Mercedes Benz...

Powerliner...

1824*(L)*	89-	•	•		**1950625380**	364	160x15.1/9.6x173.6 160x13.5/11.3x130.6 162.7x13.45x173.56	**587008J**	19506 19844 19845	2x19506 + 2x19844 + 19845	2xMB/114/2 + 2xMB/113/1 + 4xMB/114/1	**8162080001**	**810800J**	56	8x15x15.5-180°
2024*(L)*	91-	•			**1907825380**	364	200x15.5/10.0x173.6 200x15.95x130.55 200x15.37x173.5	**587008J**	19078 19112 19505	2x19078 + 19112 + 2x19505	2xMB/120/1 + 4xMB/121/1 + 2xMB/120/2	**8162080001**	**810800J**	56	8x15x15.5-180°
2024*(AK,K,L,LAK)*	91-		•		**1907825380**	364	200x15.5/10.0x173.6 200x15.95x130.55 200x15.37x173.5	**587008J**	19078 19112 19505	2x19078 + 19112 + 2x19505	2xMB/120/1 + 4xMB/121/1 + 2xMB/120/2	**8162080001**	**810800J**	56	8x15x15.5-180°
2034, 2039, 2053 **2038, 2044***(A,AK,AS,LAS)* **2550, 2553** *(K 6x2,K 6x2/4,K 6x4,L 6x2, L 6x2/4,L 6x4,LS 6x2,LS 6x2/4, LS 6x4,S 6x2,S 6x2/4,S 6x4)* **2629***(B 6x4,K 6x4,S 6x4)* **2031***(A,AS,K,S)* **2534***(K 6x2,K 6x4,L 6x2,L 6x4)* **2650** *(A 6x4,AK 6x4,AS 6x4,K 6x4, L 6x4,S 6x4)* **2050***(AF,S)* **2024***(AK,K,LAK)*	91-		•	**1949509580** **1949509530**	**1949505050** **1949501230** **1949501230**	410	183x17.0/11.8x178	**587009J** **587008J**	19495	8x19495	8xMP/32/2	**8162080002**	**810800J**	64	8x18x15.5-180°
2034, 2039, 2053, 2550, 2553 **2038, 2044***(A,AK,AS,LAS)* **2629***(B 6x4,K 6x4,S 6x4)* **2650** *(A,A 6x4,AK,AS,K 6x4,L 6x4,S 6x4)* **2031***(A,AS)* **2024***(AK,LAK)*	91-	•		**1949409580** **1949409530**	**1949405050** **1949401230** **1949401230**	410	163x17.0/11.8x178	**587009J** **587008J**	19494	8x19494	8xMP/31/2	**8162080001**	**810800J**	64	8x15x15.5-180°
2534 *(K 6x2,K 6x2/4,K 6x4,L 6x2, L 6x2/4,L 6x4,LS 6x2,LS 6x2/4, LS 6x4,S 6x2,S 6x2/4,S 6x4)* **2038, 2044***(A,A/AK,AK,AS,LAS)* **2629***(B 6x4,K 6x4,S 6x4)* **2031***(A,AS,K,S)* **2550, 2553** *(K 6x2,K 6x2/4,K 6x4,L 6x2, L 6x2/4,L 6x4,LS 6x2,LS 6x2/4, LS 6x4,S 6x2,S 6x2/4,S 6x4)* **2650** *(A,A 6x4,AK,AK 6x4,AS,AS 6x4, K 6x4,L 6x4,S 6x4)* **2024***(AK,K,LAK)* **2050***(AF,S)*	91-	•		**1949509580** **1949509530**	**1949505050** **1949501230** **1949501230**	410	183x17.0/11.8x178	**587009J** **587008J**	19495	8x19495	8xMP/32/2	**8162080002**	**810800J**	64	8x18x15.5-180°

© JURID / All rights reserved 2005

© JURID / All rights reserved 2005

				STOCK	STOCK	⌀ mm					WVA	BFMC	JURID	SUPASET	#			

Mercedes Benz...

Powerliner...

2038, 2044 *(A,AK,AS,LAS)* **2550, 2553** *(K 6x2,K 6x2/4,K 6x4,L 6x2, L 6x2/4,L 6x4,LS 6x2,LS 6x2/4, LS 6x4,S 6x2,S 6x2/4,S 6x4)* **2534** *(L 6x2,L 6x2/4,LS 6x2,LS 6x2/4, S 6x2,S 6x2/4)* **2629** *(B 6x4,K 6x4,S 6x4)* **2031** *(A,AS,K,S)* **2024** *(AK,K,LAK)* **2650** *(A 6x4,AK 6x4,AS 6x4,K 6x4, L 6x4,S 6x4)* **2050** *(AF,S)*	91-	•	**1949609580** **1949609530**	**1949605050** **1949601230** **1949601230**	410	223x17.0/11.8x178		**587009J** **587008J**	19496	8x19496	8xMP/36/2	**8162080003**	**810800J**	64	8x20x15.5-180°
2629 *(B 6x4,K 6x4,S 6x4)* **2038, 2044** *(AK)* **2550, 2553** *(K 6x2,K 6x2/4,K 6x4,L 6x2, L 6x2/4,L 6x4,LS 6x2,LS 6x2/4, LS 6x4,S 6x2,S 6x2/4,S 6x4)* **2650** *(A 6x4,AK 6x4,AS 6x4,K 6x4, L 6x4,S 6x4)* **2534** *(L 6x2)*	91-	•	**1949409580** **1949409530**	**1949405050** **1949401230** **1949401230**	410	163x17.0/11.8x178		**587009J** **587008J**	19494	8x19494	8xMP/31/2	**8162080001**	**810800J**	64	8x15x15.5-180°
2038, 2044 *(A,AK,AS,LAS)* **2550, 2553** *(K 6x2,K 6x2/4,K 6x4,L 6x2, L 6x2/4,L 6x4,LS 6x2,LS 6x2/4, LS 6x4,S 6x2,S 6x2/4,S 6x4)*	91-	• •	**1949409580** **1949409530**	**1949405050** **1949401230** **1949401230**	410	163x17.0/11.8x178		**587009J** **587008J**	19494	8x19494	8xMP/31/2	**8162080001**	**810800J**	64	8x15x15.5-180°
2534 *(K 6x4)*	91-	•		**1723805380** **1768309530**	410	143x17.0/11.8x178		**587009J** **587008J**	17238	8x17238	8xMP/30/2	**8162080002**	**810800J**	64	8x18x15.5-180°

T 2

608D, 609D	86-96	•		**1503005460**		270	79.5x8.0x210 79.5x8.0x243		**587006J**	15742 15030	2x15742 + 2x15030	2xMB/80/1 + 2xMB/81/3	**8102050003**	**810500J**	52	5x10x9.5-180°
608D, 609D, 709D, 711D	86-96	•		**2983505440** **2983509560**	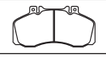	304	175x22x85.5	**561639J**	**587004J** **581306J**	29835	4x29835					
609D, 709D	86-96	•		**1505905460**		300	87.2x9.3x237 87.2x9.3x269		**587005J**	15869 15059	2x15869 + 2x15059	2xMB/107/1 + 2xMB/108/2	**8103060002**	**810600J**	52	6x10x11.5-180°
609D, 709D, 711D	86-96	•		**1735005460**		300	102.2x9.3x237 102.2x9.3x269		**587005J**	17973 17350	2x17973 + 2x17350	2xMB/100/1 + 2xMB/101/2	**8103060002**	**810600J**	52	6x10x11.5-180°
709D, 711D, 809D, 811D, 812D, 814D, 814DA, 815	86-96	•		**1735105460**		300	122.2x9.3x237 122.2x9.3x269		**587005J**	17975 17351	2x17975 + 2x17351	2xMB/117/1 + 2xMB/118/2	**8103060003**	**810600J**	52	6x12x11.5-180°
809D, 811D, 814D	86-96	•		**2983505440** **2983509560**	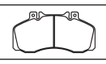	324	175x22x85.5	**561754J**	**587004J** **581306J**	29835	4x29835					
812D, 814D, 814DA, 815	86-96	•		**2983505440** **2983509560**	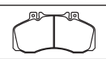	324	175x22x85.5	**567776J**	**587004J** **581306J**	29835	4x29835					

Unimog

U1700, U1750, U2100, U2150, U2400, U2450	92-	•		**2955415880**		386	89.75x19x73.8		**587011J**	29554	4x29554					

© JURID / All rights reserved 2005

© JURID / All rights reserved 2005

Mercedes Benz...

MB Trac

1000, 700, 800 **900** *(Turbo)*	76-	•	•		**2955415880**		421	89.75x19x73.8	**567144J**	**587011J**	29554	4x29554					
105, 1100, 1300, 1500, 95	74-	•	•		**1773905380** **1773909530**		410	103x17.0/11.8x178			17739	8x17739		**8162080001**	**810800J**	64	8x15x15.5-180°
65, 70	73-80	•	•		**1530003320**		390	69.8x6.5x369			15300	4x15300	4xMB/62/1	**8103060003**	**810600J**	40	6x12x11.5-180°
	73-	•	•		**2955405880**			89.75x15x73.8			29554	4x29554					
65, 70, 700, 800	82-	•	•		**2955415880**		421	89.75x19x73.8	**567144J**	**587011J**	29554	4x29554					
	73-80	•			**571372J**			89.7x15x73.8		**587011J**	20392	4x20392					

TP Liner

2527, 2531, 2631, 2644, 3234 *(B 6x4,B 8x4/4,K 6x4,K 8x4/4)*	89-		•		**1723805380** **1768309530**		410	143x17.0/11.8x178		**587009J** **587008J**	17238	8x17238	8xMP/30/2	**8162080002**	**810800J**	64	8x18x15.5-180°
2527, 2531, 2631, 2644, 3234 *(B 6x4,B 8x4/4,K 6x4,K 8x4/4)*	89-	•		**1949509580** **1949509530**	**1949505050** **1949501230** **1949501230**		410	183x17.0/11.8x178		**587009J** **587008J**	19495	8x19495	8xMP/32/2	**8162080002**	**810800J**	64	8x18x15.5-180°
3538, 3539, 3544, 4039, 4044, 4435 *(K 8x4/4)*	89-		•	**1949409580** **1949409530**	**1949405050** **1949401230** **1949401230**		410	163x17.0/11.8x178		**587009J** **587008J**	19494	8x19494	8xMP/31/2	**8162080001**	**810800J**	64	8x15x15.5-180°
	89-		•	**1949509580** **1949509530**	**1949505050** **1949501230** **1949501230**		410	183x17.0/11.8x178		**587009J** **587008J**	19495	8x19495	8xMP/32/2	**8162080002**	**810800J**	64	8x18x15.5-180°
	89-		•	**1949609580** **1949609530**	**1949605050** **1949601230** **1949601230**		410	223x17.0/11.8x178		**587009J** **587008J**	19496	8x19496	8xMP/36/2	**8162080003**	**810800J**	64	8x20x15.5-180°

Unimog

U1000, U1150, U1200, U1250, U1350, U1400, U1450, U1550, U800, U900	92-	•	•		**2955415880**		374	89.75x19x73.8	**567142J**	**587011J**	29554	4x29554					
	92-	•	•		**2955415880**		386	89.75x19x73.8	**567143J**	**587011J**	29554	4x29554					
U100, U1000, U110, U1100, U125, U1300, U54, U66, U70, U72, U80, U84, U90, U900	73-92	•	•		**2955405880**		374	89.75x15x73.8	**567141J**	**587011J**	29554	4x29554					
U110, U1100, U140, U1600, U1650, U1700, U1750, U2100, U2150, U2400, U2450, U600, U650, U90	92-	•					374		**567142J**								
	92-	•					386		**567143J**								
U110, U1100, U140, U1650, U1700, U1750, U2100, U2150, U2400, U2450, U600, U650, U90	92-	•					374		**567805J**								
	92-		•				374		**567142J**								
	92-		•				386		**567143J**								
	92-		•				374		**567805J**								
U120, U1200, U1300, U150, U1500, U1700, U435	74-92	•					380		**567140J**								
	74-92		•				380		**567140J**								
U1300, U1500, U1700	74-92	•					380		**567806J**								
	74-92		•				380		**567806J**								

JURID by Honeywell

© JURID / All rights reserved 2005

© JURID / All rights reserved 2005

JURID by Honeywell

				STOCK	STOCK	mm					WVA	BFMC	JURID	SUPASET	#	

Mercedes Benz...

...

Unimog...

U1600, U1650	92-	•		2955415880		374	89.75x19x73.8	567142J		587011J	29554	4x29554				
	92-	•		2955415880		386	89.75x19x73.8	567143J		587011J	29554	4x29554				

MB

MB100D, MB2.4D, MB2.4TD	87-95	•		571521J		263	145.5x14x59.2	567145J			20934 20573	2x20934 + 2x21573				
MB2.4D, MB2.4TD	87-95	•		571521J		238.5	145.5x14x59.2	561577J			20934 20573	2x20934 + 2x21573				

Mercedes Benz / Evobus

LPO608

	70-	•		1505705380		300	90x10.6x248				15057	4x15057	4xMB/64/1	8103080003	810800J	40	8x15x15.5-180°
	70-		•	1505705380		300	90x10.6x248				15057	4x15057	4xMB/64/1	8103080003	810800J	40	8x15x15.5-180°

Niederflur

NF3		•	•	2910815390		430	248x30x109	567801J			29108	4x29108				

O100

City Bus	92-	•	•	2910815390		430	248x30x109	567751J			29108	4x29108				

O1114

L	88-	•		1950625450		364	160x15.1/9.6x173.6 160x13.5/11.3x130.6			587008J	19506 19844	2x19506 + 2x19844 + 19845	2xMB/114/2 + 2xMB/113/1 + 4xMB/114/1	8162080001	810800J	56	8x15x15.5-180°
	88-		•	1729035380		364	130x15.5/10.0x174 130x15.5/13.3x131 132.7x13.47x130.55			587009J 587008J	17290 17949 17950	2x17290 + 2x17949 + 4x17950	2xMB/111/2 + 2xMB/111/1 + 4xMB/112/1	8162080001	810800J	56	8x15x15.5-180°
	88-		•	1950625450		364	160x15.1/9.6x173.6 160x13.5/11.3x130.6			587008J	19506 19844	2x19506 + 2x19844 + 19845	2xMB/114/2 + 2xMB/113/1 + 4xMB/114/1	8162080001	810800J	56	8x15x15.5-180°
	-88		•	1729005380		360	130x13.5/8.0x174 130x15.5/13.3x131 132.7x13.47x130.55			587009J 587008J	17290 17949 17950	2x17290 + 2x17949 + 4x17950	2xMB/111/2 + 2xMB/111/1 + 4xMB/112/1	8162080001	810800J	56	8x15x15.5-180°

JURID by Honeywell
© JURID / All rights reserved 2005
© JURID / All rights reserved 2005
JURID by Honeywell

Mercedes Benz / Evobus

L	88-	•		**1950625450**	364	160x15.1/9.6x173.6 160x13.5/11.3x130.6	**587008J**	19506 19844	2x19506 + 2x19844 + 19845	2xMB/114/2 + 2xMB/113/1 + 4xMB/114/1	**8162080001**	**810800J**	56	8x15x15.5-180°
	88-		•	**1729035380**	364	130x15.5/10.0x174 130x15.5/13.3x131 132.7x13.47x130.55	**587009J** **587008J**	17290 17949 17950	2x17290 + 2x17949 + 4x17950	2xMB/111/2 + 2xMB/111/1 + 4xMB/112/1	**8162080001**	**810800J**	56	8x15x15.5-180°
	88-		•	**1950625450**	364	160x15.1/9.6x173.6 160x13.5/11.3x130.6	**587008J**	19506 19844	2x19506 + 2x19844 + 19845	2xMB/114/2 + 2xMB/113/1 + 4xMB/114/1	**8162080001**	**810800J**	56	8x15x15.5-180°
	-88		•	**1729005380**	360	130x13.5/8.0x174 130x15.5/13.3x131 132.7x13.47x130.55	**587009J** **587008J**	17290 17949 17950	2x17290 + 2x17949 + 4x17950	2xMB/111/2 + 2xMB/111/1 + 4xMB/112/1	**8162080001**	**810800J**	56	8x15x15.5-180°
L	88-	•		**1950625450**	364	160x15.1/9.6x173.6 160x13.5/11.3x130.6	**587008J**	19506 19844	2x19506 + 2x19844 + 19845	2xMB/114/2 + 2xMB/113/1 + 4xMB/114/1	**8162080001**	**810800J**	56	8x15x15.5-180°
	88-		•	**1729035380**	364	130x15.5/10.0x174 130x15.5/13.3x131 132.7x13.47x130.55	**587009J** **587008J**	17290 17949 17950	2x17290 + 2x17949 + 4x17950	2xMB/111/2 + 2xMB/111/1 + 4xMB/112/1	**8162080001**	**810800J**	56	8x15x15.5-180°
	88-		•	**1950625450**	364	160x15.1/9.6x173.6 160x13.5/11.3x130.6	**587008J**	19506 19844	2x19506 + 2x19844 + 19845	2xMB/114/2 + 2xMB/113/1 + 4xMB/114/1	**8162080001**	**810800J**	56	8x15x15.5-180°
	-88		•	**1729005380**	360	130x13.5/8.0x174 130x15.5/13.3x131 132.7x13.47x130.55	**587009J** **587008J**	17290 17949 17950	2x17290 + 2x17949 + 4x17950	2xMB/111/2 + 2xMB/111/1 + 4xMB/112/1	**8162080001**	**810800J**	56	8x15x15.5-180°
0301															
	86-88	•	•	**1950605450**	360	160x13.5/8.0x173.6 160x13.5/11.3x130.6 162.7x13.47x130.55	**587008J**	19506 19844 1984516	2x19506 + 2x19844 + 19845	2xMB/114/2 + 2xMB/113/1 + 4xMB/114/1	**8162080001**	**810800J**	56	8x15x15.5-180°
	88-	•	•	**1950625450**	364	160x15.1/9.6x173.6 160x13.5/11.3x130.6	**587008J**	19506 19844	2x19506 + 2x19844 + 19845	2xMB/114/2 + 2xMB/113/1 + 4xMB/114/1	**8162080001**	**810800J**	56	8x15x15.5-180°
0302															
10R, 11R	65-74		•	**1710505380**	418	140x15.7x213		17105	8x17105	8xMB/65/1	**8103080003**	**810800J**	64	8x15x15.5-180°
10R, 11R, 12R	65-74	•		**1710505380**	418	140x15.7x213		17105	8x17105	8xMB/65/1	**8103080003**	**810800J**	64	8x15x15.5-180°
12R	65-74		•	**1918205380**	418	160x15.7x213		19182	8x19182	8xMB/66/1	**8103080003**	**810800J**	64	8x15x15.5-180°
13R, 16R, 23R	65-74	•	•	**1912505450**	370	160x19.4x156		19125	8x19125	8xMB/61/1	**8103080005**	**810800J**	64	8x18x15.5-180°
0303															
10R, 39R **11R, 12R, 13R, 14R, 15R** *(300.112,300.142,300.162,300.312, 300.342,300.362)*	74-81		•	**1970705370** **1958109580**	410	223x17.9/7.9x219 223x18.0/15.4x174 223x19x173.66		19581 19582 19707	4x19581 + 2x19582 + 2x19707	4xMB/77/1 + 2xMB/76/1 + 2xMB/76/2	**8162080002**	**810800J**	72	8x18x15.5-180°
	81-91		•	**1970705370** **1958109580**	410	223x17.9/7.9x219 223x18.0/15.4x174 223x19x173.66		19581 19582 19707	4x19581 + 2x19582 + 2x19707	4xMB/77/1 + 2xMB/76/1 + 2xMB/76/2	**8162080002**	**810800J**	72	8x18x15.5-180°
10R, 39R **11R, 12R** *(300.111,300.121,300.141,300.161, 300.511,300.521,300.531)*	74-91	•		**1779505380**	410	143x18.0/15.4x174 143x17.9/9.0x219		17795 17796	4x17795 + 4x17796	4xMB/83/1 + 4xMB/82/1	**8162080002**	**810800J**	64	8x18x15.5-180°

© JURID / All rights reserved 2005

© JURID / All rights reserved 2005

Mercedes Benz / Evobus

				STOCK	STOCK	mm				WVA	BFMC	JURID	SUPASET	#				
O309...																		
D *(OM 352)*	77-	•		**1558035460**	304	98x12.2x244 98x12.2x286				1558020 1558021	2x1558020 + 2x1558120	2xMB/94/1 + 2xMB/95/1	**8103060003**	**810600J**	52	6x12x11.5-180°
	77-	•		**1740925380**	304	135x12.5x248				17409	4x17409	4xMB/93/1	**8103080003**	**810800J**	40	8x15x15.5-180°
	77-		•	**1558035460**	304	98x12.2x244 98x12.2x286				1558020 1558021	2x1558020 + 2x1558120	2xMB/94/1 + 2xMB/95/1	**8103060003**	**810600J**	52	6x12x11.5-180°
	77-		•	**1740925380**	304	135x12.5x248				17409	4x17409	4xMB/93/1	**8103080003**	**810800J**	40	8x15x15.5-180°
O317																		
0.2, K	70-	•		**1912505450**	370	160x19.4x156				19125	8x19125	8xMB/61/1	**8103080005**	**810800J**	64	8x18x15.5-180°
	70-		•	**1946605450**	370	220x19.4x156				19466	8x19466	8xMB/58/3	**8103080005**	**810800J**	80	8x18x15.5-180°
O330																		
		•		**1970605370** **1957909580**	410	163x17.9/8.0x219 163x18.0/15.4x174 163x19x173.66				19579 19580 19706	4x19579 + 2x19580 + 2x19706	4xMB/75/1 + 2xMB/74/1 + 2xMB/74/2	**8162080002**	**810800J**	72	8x18x15.5-180°
			•	**1970705370** **1958109580**	410	223x17.9/7.9x219 223x18.0/15.4x174 223x19x173.66				19581 19582 19707	4x19581 + 2x19582 + 2x19707	4xMB/77/1 + 2xMB/76/1 + 2xMB/76/2	**8162080002**	**810800J**	72	8x18x15.5-180°
O340																		
		•		**1970605370** **1957909580**	410	163x17.9/8.0x219 163x18.0/15.4x174 163x19x173.66				19579 19580 19706	4x19579 + 2x19580 + 2x19706	4xMB/75/1 + 2xMB/74/1 + 2xMB/74/2	**8162080002**	**810800J**	72	8x18x15.5-180°
			•	**1970705370** **1958109580**	410	223x17.9/7.9x219 223x18.0/15.4x174 223x19x173.66				19581 19582 19707	4x19581 + 2x19582 + 2x19707	4xMB/77/1 + 2xMB/76/1 + 2xMB/76/2	**8162080002**	**810800J**	72	8x18x15.5-180°
O350																		
tourismo *(RHD,SHD)*	91-	•	•	**2903005390** **2903009560**	438	250x28x118	**567555J**	**587007J**		29030	4x29030							
	91-	•	•	**2905305390**	438	250x30x118	**567555J**	**587007J**		29053	4x29053							
O402																		
	86-88	•	•	**1950605450**	360	160x13.5/8.0x173.6 160x13.5/11.3x130.6 162.7x13.47x130.55		**587008J**		19506 19844 1984516	2x19506 + 2x19844 + 19845	2xMB/114/2 + 2xMB/113/1 + 4xMB/114/1	**8162080001**	**810800J**	56	8x15x15.5-180°
	88-	•	•	**1950625450**	364	160x15.1/9.6x173.6 160x13.5/11.3x130.6		**587008J**		19506 19844	2x19506 + 2x19844 + 19845	2xMB/114/2 + 2xMB/113/1 + 4xMB/114/1	**8162080001**	**810800J**	56	8x15x15.5-180°
O403																		
RHD,SHD	91-	•	•	**2903005390** **2903009560**	438	250x28x118	**567555J**	**587007J**		29030	4x29030							
	91-	•	•	**2905305390**	438	250x30x118	**567555J**	**587007J**		29053	4x29053							
O404																		
10-15R	91-	•	•	**2903005390** **2903009560**	438	250x28x118	**567555J**	**587007J**		29030	4x29030							
	91-	•	•	**2905305390**	438	250x30x118	**567555J**	**587007J**		29053	4x29053							

© JURID / All rights reserved 2005

© JURID / All rights reserved 2005

Mercedes Benz / Evobus

O404...																		
10, 15R		•	**1970605370** **1957909580**		410	163x17.9/8.0x219 163x18.0/15.4x174 163x19x173.66			19579 19580 19706	4x19579 + 2x19580 + 2x19706	4xMB/75/1 + 2xMB/74/1 + 2xMB/74/2	**8162080002**	**810800J**	72	8x18x15.5-180°
		•	**1970705370** **1958109580**		410	223x17.9/7.9x219 223x18.0/15.4x174 223x19x173.66			19581 19582 19707	4x19581 + 2x19582 + 2x19707	4xMB/77/1 + 2xMB/76/1 + 2xMB/76/2	**8162080002**	**810800J**	72	8x18x15.5-180°
O405																		
G	84-	•	**1970605450** **1957909580**		410	163x17.9/8.0x219 163x18.0/15.4x174 163x19x173.66			19579 19580 19706	4x19579 + 2x19580 + 2x19706	4xMB/75/1 + 2xMB/74/1 + 2xMB/74/2	**8162080002**	**810800J**	72	8x18x15.5-180°
	84-	•	**1970705450** **1958109580**		410	223x17.9/7.9x219 223x18.0/15.4x174 223x19x173.66			19581 19582 19707	4x19581 + 2x19582 + 2x19707	4xMB/77/1 + 2xMB/76/1 + 2xMB/76/2	**8162080002**	**810800J**	72	8x18x15.5-180°
O407																		
	84-	•	**1970605450** **1957909580**		410	163x17.9/8.0x219 163x18.0/15.4x174 163x19x173.66			19579 19580 19706	4x19579 + 2x19580 + 2x19706	4xMB/75/1 + 2xMB/74/1 + 2xMB/74/2	**8162080002**	**810800J**	72	8x18x15.5-180°
	84-	•	**1970705450** **1958109580**		410	223x17.9/7.9x219 223x18.0/15.4x174 223x19x173.66			19581 19582 19707	4x19581 + 2x19582 + 2x19707	4xMB/77/1 + 2xMB/76/1 + 2xMB/76/2	**8162080002**	**810800J**	72	8x18x15.5-180°
O408																		
	84-	•	**1970605450** **1957909580**		410	163x17.9/8.0x219 163x18.0/15.4x174 163x19x173.66			19579 19580 19706	4x19579 + 2x19580 + 2x19706	4xMB/75/1 + 2xMB/74/1 + 2xMB/74/2	**8162080002**	**810800J**	72	8x18x15.5-180°
	84-	•	**1970705450** **1958109580**		410	223x17.9/7.9x219 223x18.0/15.4x174 223x19x173.66			19581 19582 19707	4x19581 + 2x19582 + 2x19707	4xMB/77/1 + 2xMB/76/1 + 2xMB/76/2	**8162080002**	**810800J**	72	8x18x15.5-180°
O409																		
5t,6t,7.5t	86-	•	**2983505440** **2983509560**		304	175x22x85.5	**561639J**		**587004J** **581306J**	29835	4x29835				
	86-	•	**2983505440** **2983509560**		324	175x22x85.5	**561754J**		**587004J** **581306J**	29835	4x29835				
5t	86-	•	**1505905460**		300	87.2x9.3x237 87.2x9.3x269			**587005J**	15869 15059	2x15869 + 2x15059	2xMB/107/1 + 2xMB/108/2	**8103060002**	**810600J**	52	6x10x11.5-180°
6t	86-	•	**1735005460**		300	102.2x9.3x237 102.2x9.3x269			**587005J**	17973 17350	2x17973 + 2x17350	2xMB/100/1 + 2xMB/101/2	**8103060002**	**810600J**	52	6x10x11.5-180°
7.5t	86-	•	**1735105460**		300	122.2x9.3x237 122.2x9.3x269			**587005J**	17975 17351	2x17975 + 2x17351	2xMB/117/1 + 2xMB/118/2	**8103060003**	**810600J**	52	6x12x11.5-180°
O505																		
Tourismo *(15RHD,15SHD)*	01/00-	•	**2910815390**			248x30x109				29108	4x29108				
	01/00-	•	**2910815390**			248x30x109				29108	4x29108				
O520																		
Cito	99-	•	**2910815390**		430	248x30x109	**567751J**			29108	4x29108				
O530																		
Citaro	98-	•	**2910815390**		430	248x30x109	**567751J**			29108	4x29108				

© JURID / All rights reserved 2005

© JURID / All rights reserved 2005

Mercedes Benz / Evobus

O550																		
Integro	00-	•	•	**2910815390**		430	248x30x109	**567751J**		29108	4x29108							
	00-		•	**1900405380** **1900405450**		410	220x16.1/14.1x211 220x19.9/11.3x211 220x16.8x210.8			19004 19743 19755	2x19004 + 2x19743 + 4x19755	2xPB/32/2 + 2xPB/32/1 + 4xPB/31/1	**8103100002**	**811000J**	96	10x18x18-180°		
O580																		
Travego	99-	•	•	**2910815390**		430	248x30x109	**567751J**		29108	4x29108							
O609																		
D		•		**2983505440** **2983509560**		304	175x22x85.5	**561639J**	**587004J** **581306J**	29835	4x29835							
			•	**1505905460**		300	87.2x9.3x237 87.2x9.3x269		**587005J**	15869 15059	2x15869 + 2x15059	2xMB/107/1 + 2xMB/108/2	**8103060002**	**810600J**	52	6x10x11.5-180°		
			•	**1735105460**		300	122.2x9.3x237 122.2x9.3x269		**587005J**	17975 17351	2x17975 + 2x17351	2xMB/117/1 + 2xMB/118/2	**8103060003**	**810600J**	52	6x12x11.5-180°		
O611																		
D		•		**2983505440** **2983509560**		324	175x22x85.5	**561754J**	**587004J** **581306J**	29835	4x29835							
			•	**1735105460**		300	122.2x9.3x237 122.2x9.3x269		**587005J**	17975 17351	2x17975 + 2x17351	2xMB/117/1 + 2xMB/118/2	**8103060003**	**810600J**	52	6x12x11.5-180°		
O614																		
D		•		**2983505440** **2983509560**		324	175x22x85.5	**561754J**	**587004J** **581306J**	29835	4x29835							
			•	**1735105460**		300	122.2x9.3x237 122.2x9.3x269		**587005J**	17975 17351	2x17975 + 2x17351	2xMB/117/1 + 2xMB/118/2	**8103060003**	**810600J**	52	6x12x11.5-180°		
O812																		
D	08/96-	•		**2983505440** **2983509560**		324	175x22x85.5	**567762J**	**587004J** **581306J**	29835	4x29835							
	08/96-		•	**2983505440** **2983509560**		324	175x22x85.5	**567763J**	**587004J** **581306J**	29835	4x29835							
	08/96-		•	**2983505440** **2983509560**		304	175x22x85.5	**567769J**	**587004J** **581306J**	29835	4x29835							
O814																		
D	08/96-	•		**2983505440** **2983509560**		324	175x22x85.5	**567762J**	**587004J** **581306J**	29835	4x29835							
	08/96-		•	**2983505440** **2983509560**		324	175x22x85.5	**567763J**	**587004J** **581306J**	29835	4x29835							
	08/96-		•	**2983505440** **2983509560**		304	175x22x85.5	**567769J**	**587004J** **581306J**	29835	4x29835							
L*(7.5t)*	-06/87	•	•	**1727805380**		304	105x11.5/7.2x259 105x10.56x259.13		**587009J** **587008J**	17278 17927	2x17278 + 2x17927	2xMB/109/2 + 2xMB/109/1	**8162080001**	**810800J**	40	8x15x15.5-180°		
	07/87-	•		**1727835380**		308	105x13.3/9.0x259 105x10.56x259.13		**587009J** **587008J**	17278 17927	2x17278 + 2x17927	2xMB/109/2 + 2xMB/109/1	**8162080001**	**810800J**	40	8x15x15.5-180°		
L*(8.6t,8t)*	07/87-	•		**1728035380**		308	120x13.3/9.0x259 120x10.56x259.13		**587009J** **587008J**	17280 17928	2x17280 + 2x17928	2xMB/110/2 + 2xMB/110/1	**8162080001**	**810800J**	40	8x15x15.5-180°		
	-06/87	•		**1728005380**		304	120x11.5/7.2x259 120x10.56x259.13		**587008J**	17280 17928	2x17280 + 2x17928	2xMB/110/2 + 2xMB/110/1	**8162080001**	**810800J**	40	8x15x15.5-180°		

© JURID / All rights reserved 2005

© JURID / All rights reserved 2005

Mercedes Benz / Evobus

O814...															
L*(7.5t)*	07/87-	•	**1727835380**	308	105x13.3/9.0x259 105x10.56x259.13	**587009J** **587008J**	17278 17927	2x17278 + 2x17927	2xMB/109/2 + 2xMB/109/1	**8162080001**	**810800J**	40	8x15x15.5-180°
L*(8.6t,8t)*	07/87-	•	**1728035380**	308	120x13.3/9.0x259 120x10.56x259.13	**587009J** **587008J**	17280 17928	2x17280 + 2x17928	2xMB/110/2 + 2xMB/110/1	**8162080001**	**810800J**	40	8x15x15.5-180°
	07/87-	•	**1728735380**	308	135x13.3/9.0x259 135x10.56x256.13	**587009J** **587008J**	17287 17929	2x17287 + 2x17929	2xMB/115/2 + 2xMB/115/1	**8162080001**	**810800J**	40	8x15x15.5-180°
	-06/87	•	**1727805380**	304	105x11.5/7.2x259 105x10.56x259.13	**587009J** **587008J**	17278 17927	2x17278 + 2x17927	2xMB/109/2 + 2xMB/109/1	**8162080001**	**810800J**	40	8x15x15.5-180°
O817															
L	07/87-	•	**1728035380**	308	120x13.3/9.0x259 120x10.56x259.13	**587009J** **587008J**	17280 17928	2x17280 + 2x17928	2xMB/110/2 + 2xMB/110/1	**8162080001**	**810800J**	40	8x15x15.5-180°
	-06/87	•	**1728005380**	304	120x11.5/7.2x259 120x10.56x259.13	**587009J** **587008J**	17280 17928	2x17280 + 2x17928	2xMB/110/2 + 2xMB/110/1	**8162080001**	**810800J**	40	8x15x15.5-180°
	07/87-	•	**1728035380**	308	120x13.3/9.0x259 120x10.56x259.13	**587009J** **587008J**	17280 17928	2x17280 + 2x17928	2xMB/110/2 + 2xMB/110/1	**8162080001**	**810800J**	40	8x15x15.5-180°
	07/87-	•	**1728735380**	308	135x13.3/9.0x259 135x10.56x256.13	**587009J** **587008J**	17287 17929	2x17287 + 2x17929	2xMB/115/2 + 2xMB/115/1	**8162080001**	**810800J**	40	8x15x15.5-180°
	-06/87	•	**1728705380**	304	135x11.5/7.2x259 135x10.56x256.13	**587009J** **587008J**	17287 17929	2x17287 + 2x17929	2xMB/115/2 + 2xMB/115/1	**8162080001**	**810800J**	40	8x15x15.5-180°
O914															
	07/87-	•	**1728035380**	308	120x13.3/9.0x259 120x10.56x259.13	**587009J** **587008J**	17280 17928	2x17280 + 2x17928	2xMB/110/2 + 2xMB/110/1	**8162080001**	**810800J**	40	8x15x15.5-180°
	07/87-	•	**1728735380**	308	135x13.3/9.0x259 135x10.56x256.13	**587009J** **587008J**	17287 17929	2x17287 + 2x17929	2xMB/115/2 + 2xMB/115/1	**8162080001**	**810800J**	40	8x15x15.5-180°
	07/87-	•	**1728035380**	308	120x13.3/9.0x259 120x10.56x259.13	**587009J** **587008J**	17280 17928	2x17280 + 2x17928	2xMB/110/2 + 2xMB/110/1	**8162080001**	**810800J**	40	8x15x15.5-180°
	07/87-	•	**1728735380**	308	135x13.3/9.0x259 135x10.56x256.13	**587009J** **587008J**	17287 17929	2x17287 + 2x17929	2xMB/115/2 + 2xMB/115/1	**8162080001**	**810800J**	40	8x15x15.5-180°
OF															
1113	67-75	•	**1723805380**	410	143x17.0/11.8x178	**587009J** **587008J**	17238	8x17238	8xMP/30/2	**8162080002**	**810800J**	64	8x18x15.5-180°
	67-75	•	**1729805380**	418	120x15.0x213		17298	8x17298	8xMB/68/1	**8103080003**	**810800J**	64	8x15x15.5-180°
1113, 1313, 1317	67-75	•	**1729805380**	418	120x15.0x213		17298	8x17298	8xMB/68/1	**8103080003**	**810800J**	64	8x15x15.5-180°
1313, 1317	67-75	•	**1710505380**	418	140x15.7x213		17105	8x17105	8xMB/65/1	**8103080003**	**810800J**	64	8x15x15.5-180°
1413	69-75	•	**1710505380**	418	140x15.7x213		17105	8x17105	8xMB/65/1	**8103080003**	**810800J**	64	8x15x15.5-180°
1413, 1417	69-75	•	**1710505380**	418	140x15.7x213		17105	8x17105	8xMB/65/1	**8103080003**	**810800J**	64	8x15x15.5-180°
	69-75	•	**1918205380**	418	160x15.7x213		19182	8x19182	8xMB/66/1	**8103080003**	**810800J**	64	8x15x15.5-180°
1419, 1617, 1621, 1624, 1916		•	**1727605050**	430	140x15.0x182		17276	8x17276	8xMB/60/1	**8103080007**	**810800J**	64	8x20x15.5-180°
		•	**1949405050**	410	163x17.0/11.8x178	**587009J** **587008J**	19494	8x19494	8xMP/31/2	**8162080001**	**810800J**	64	8x15x15.5-180°
		•	**1946605450**	370	220x19.4x156		19466	8x19466	8xMB/58/3	**8103080005**	**810800J**	80	8x18x15.5-180°
		•	**1949405050**	410	163x17.0/11.8x178	**587009J** **587008J**	19494	8x19494	8xMP/31/2	**8162080001**	**810800J**	64	8x15x15.5-180°
OHL															
1622, 1625, 1627, 1628, 1634, 1829, 1834		•	**1949405050**	410	163x17.0/11.8x178	**587009J** **587008J**	19494	8x19494	8xMP/31/2	**8162080001**	**810800J**	64	8x15x15.5-180°
		•	**1949505450**	410	183x17.0/11.8x178	**587009J** **587008J**	19495	8x19495	8xMP/32/2	**8162080002**	**810800J**	64	8x18x15.5-180°
		•	**1949605450**	410	223x17.0/11.8x178	**587009J** **587008J**	19496	8x19496	8xMP/36/2	**8162080003**	**810800J**	64	8x20x15.5-180°

© JURID / All rights reserved 2005

© JURID / All rights reserved 2005

				STOCK →	← STOCK	⌀ mm				WVA	BFMC	JURID	SUPASET	#				

Mercedes Benz / Evobus

OH

1113, 1313, 1317	68-	•		**1729805380**		418	120x15.0x213			17298	8x17298	8xMB/68/1	**8103080003**	**810800J**	64	8x15x15.5-180°
	68-		•	**1710505380**		418	140x15.7x213			17105	8x17105	8xMB/65/1	**8103080003**	**810800J**	64	8x15x15.5-180°
	68-		•	**1729805380**		418	120x15.0x213			17298	8x17298	8xMB/68/1	**8103080003**	**810800J**	64	8x15x15.5-180°
1416, 1417		•		**1949405050**		410	163x17.0/11.8x178	**587009J 587008J**		19494	8x19494	8xMP/31/2	**8162080001**	**810800J**	64	8x15x15.5-180°
			•	**1949505450**		410	183x17.0/11.8x178	**587009J 587008J**		19495	8x19495	8xMP/32/2	**8162080002**	**810800J**	64	8x18x15.5-180°
1416, 1417, 1622, 1625, 1628			•	**1949605450**		410	223x17.0/11.8x178	**587009J 587008J**		19496	8x19496	8xMP/36/2	**8162080003**	**810800J**	64	8x20x15.5-180°
1622, 1625, 1628		•		**1949405450**		410	163x17.0/11.8x178	**587009J 587008J**		19494	8x19494	8xMP/31/2	**8162080001**	**810800J**	64	8x15x15.5-180°

ON

1517	70-	•		**1912505450**		370	160x19.4x156			19125	8x19125	8xMB/61/1	**8103080005**	**810800J**	64	8x18x15.5-180°
	70-		•	**1946605450**		370	220x19.4x156			19466	8x19466	8xMB/58/3	**8103080005**	**810800J**	80	8x18x15.5-180°

Tourino

	03-	•	•	**2909305390**			210.7x30x92.5			29093	4x29093							

minibus

307D, 308, 308D, 310, 310D	77-94	•		**571272J**		280	149x17.8x69	**561135J**		**581304J**	20784	4x20784						
	77-94		•	**1302005460**		260	54x8.0x201 54x8.0x233			**587006J**	13532 13020	2x13532 + 2x13020	2xMB/88/1 + 2xMB/89/2	**8102040003**	**810400J**	52	4x10x7.5-180°	

Meritor / ROR

AC, TM 22500		•	**1960409550**	**1960403290** **1960401230**		311	190x15.3/10.8x126 190x16.1/13.1x158				19604 19605	4x19604 + 4x19605	4xRW/9/2 + 4xRW/13/2	**8158057001**	**810635J**	80	6.35x15.88x11.9-150°(L10/10-10)	
LM 9000, Q+		•		**1903609555**		419	178x21.9/17.7x188 178x18.2/11.5x194				19036 19037	4x19036 + 4x19037	4xRW/34/1 + 4xRW/35/1	**8158058001**	**810635J**	96	6.35x17.5x11.9-150°(L11/10-11)	
TE 9000, TM		•	**1903609552**	**1903604042** **1903601232**		419	178x18.6/16.7x188 178x18.2/11.5x194				19036 19037	4x19036 + 4x19037	4xIL/66/3 + 4xIL/67/3	**8158057001**	**810635J**	96	6.35x15.88x11.9-150°(L10/10-10)	
TL 1800 Triaxle, TM BMX*(+ABS)*		•	**1990809550**	**1990803290** **1990801230**		350	200x18.0/11.0x165 200x18.8/15.5x168				19908 19909	4x19908 + 4x19909	4xRW/22/1 + 4xRW/21/1	**8158057001**	**810635J**	80	6.35x15.88x11.9-150°(L10/10-10)	
Ⓞ : Lucas/Meritor*(DX195)* **19.5"**	99-	•		**2912409560**		378	205.5x27x102	**567957J**			29124	4x29124						
		•		**1936504042** **1936509582** **1936509552**		419	203x18.2/11.5x194 203x18.6/15.7x188				19365 19366	4x19365 + 4x19366	4xRW/2/5 + 4xRW/1/5	**8158057001**	**810635J**	128	6.35x15.88x11.9-150°(L10/10-10)	
10 holes,6 holes		•		**1936904040**		419	219x18.5/10.5x196 219x18.6/15.2x190				19369 19370	4x19369 + 4x19370	4xFU/4/2 + 4xFU/5/2	**8158057001**	**810635J**	96	6.35x15.88x11.9-150°(L10/10-10)	
		•		**1938505380** **1938509530**		381	178x18.6/12.6x189 177.80x18x189.06		**587029J**		19384 19385	6x19384 + 2x19385	6xCW/4/1 + 2xCW/4/2	**8158057001**	**810635J**	96	6.35x15.88x11.9-150°(L10/10-10)	
		•		**1955303270**		410	200x20.7/13.5x199 200x22.2/13.8x99 200x22.5/15.7x199		**587031J**		19553 19716 19717	4x19553 + 2x19716 + 2x19717	4xRW/29/1 + 2xRW/33/1 + 2xRW/32/1	**8103080005**	**810800J**	96	8x18x15.5-180°	
		•		**1992809530**		362	170x20.0/13.5x165				19928	8x19928	8xRW/26/1	**8158056001**	**810635J**	96	6.35x14.29x11.9-150°(L9/10-9)	
Ⓞ : Lucas/Meritor*(D3)* **22.5"**		•		**2903005390** **2903009560**			250x28x118				29030	4x29030						

© JURID / All rights reserved 2005

© JURID / All rights reserved 2005

M

													WVA	BFMC					
																JURID	SUPASET	#	

			→STOCK	STOCK→	∅ mm			WVA	BFMC	JURID	SUPASET	#	

Mistral

⊢⊣ : BPW		•	1903209580	1903204040 1903201250	420	180x17.5/10.5x204		19032	8x19032	8xBC/98/1	8162080001	810800J	80	8x15x15.5-180°
		•	1909409580	1909404040 1909401250	420	200x17.5/10.5x204		19094	8x19094	8xBC/97/1	8162080001	810800J	80	8x15x15.5-180°

Mol

⊢⊣ : BPW		•	1903209580	1903204040 1903201250	420	180x17.5/10.5x204		19032	8x19032	8xBC/98/1	8162080001	810800J	80	8x15x15.5-180°
		•	1909409580	1909404040 1909401250	420	200x17.5/10.5x204		19094	8x19094	8xBC/97/1	8162080001	810800J	80	8x15x15.5-180°
⊢⊣ : ROR		•		1936504042 1936509582 1936509552	419	203x18.2/11.5x194 203x18.6/15.7x188		19365 19366	4x19365 + 4x19366	4xRW/2/5 + 4xRW/1/5	8158057001	810635J	128	6.35x15.88x11.9-150°(L10/10-10)
⊢⊣ : York		•		1946109550	394	209x16.6/4.4x196 209x16.6/13.5x196		19461 19462	4x19461 + 4x19462	4xYK/9/3 + 4xYK/8/3	8158044002	810476J	128	4.76x15.88x9.32-150°(8-10)

Montenegro

15"		•		1813400	314	200x16.8/15.3x180 200x16.8/15.3x180		18134 18135	4x18134 + 4x18135					
		•		1903609553	419	178x18.6/16.7x188 178x18.2/11.5x194		19036 19037	4x19036 + 4x19037	4xIL/66/3 + 4xIL/67/3	8158057001	810635J	96	6.35x15.88x11.9-150°(L10/10-10)

Moos Gear

⊢⊣ : ROR		•	1903609552	1903604042 1903601232	419	178x18.6/16.7x188 178x18.2/11.5x194		19036 19037	4x19036 + 4x19037	4xIL/66/3 + 4xIL/67/3	8158057001	810635J	96	6.35x15.88x11.9-150°(L10/10-10)
		•		1936904040	419	219x18.5/10.5x196 219x18.6/15.2x190		19369 19370	4x19369 + 4x19370	4xFU/4/2 + 4xFU/5/2	8158057001	810635J	96	6.35x15.88x11.9-150°(L10/10-10)

Müller (Mitteltal)

P3606, T3606, U2506/30, U3006/30	62-	•		1528705360	356	70x7.3x186		15287	8x15287		8103060003	810600J	48	6x12x11.5-180°
P3606, T3606, U3006/30, U3606/30	63-	•		1524705380	400	80x8.0x389		15247	4x15247	4xFD/86/1	8162080001	810800J	40	8x15x15.5-180°
⊢⊣ : BPW		•		1910204040	300	150x10.3x142		19102	8x19102	8xBC/54/1	8162080001	810800J	64	8x15x15.5-180°
		•		1711504040	400	120x10.0x189		17115	8x17115	8xBC/39/1	8162080002	810800J	64	8x18x15.5-180°
		•		1910304040	300	200x10.0x141		19103	8x19103	8xBC/55/1	8162080001	810800J	64	8x15x15.5-180°

JURID by Honeywell
© JURID / All rights reserved 2005
© JURID / All rights reserved 2005
JURID by Honeywell

Neoplan

Centroliner

N4522	03-	•	•		**2913109560**			249.63x30x118.2			29131	4x29131					

Cityliner

N116/2, N116/3	92-	•			**2910815390**		430	248x30x109	**567800J**		29108	4x29108					
	92-		•		**1969905380**		410	220x17.5/15.7x196 220x17.4/6.3x196 220x18.45x196			19699 19847 19848	2x19699 + 2x19847 + 4x19848	2xPB/18/2 + 2x PB/18/1 + 4xPB/19/1	**8103100002**	**811000J**	96	10x18x18-180°
N116/3 *(: Scania)*	87-		•	**1964709580** **1964709530**			413	254x19.0x193			19647	8x19647	8xSV/34/1	**8130074001**		96	6.35x18x11.5-180°
N116 *(: Scania)*	87-		•	**1964709580**	**1964709530**		413	254x19.0x193			19647	8x19647	8xSV/34/1	**8130074001**		96	6.35x18x11.5-180°
N116, N116/3H, N116H	92-	•			**2910815390**			248x30x109			29108	4x29108					
N116/3, N116 *(: Daf)*	74-	•			**1726305700**		419	127x18.5/9.4x211 127x18.5/13.8x218			17263 17264	4x17263 + 4x17264	4xDF/22/2 + 4xDF/23/2	**8158057001**	**810635J**	80	6.35x15.88x11.9-150°
	74-		•	**1925609580**	**1925605700**		419	178x18.5/9.4x211 178x18.5/13.8x218			19256 19260	4x19256 + 4x19260	4xDF/16/1 + 4xDF/17/2	**8158057001**	**810635J**	112	6.35x15.88x11.9-150°
N116/3, N116 *(: Mercedes Benz)*	74-	•		**1957909580**	**1970605370**		410	163x17.9/8.0x219 163x18.0/15.4x174 163x19x173.66			19579 19580 19706	4x19579 + 2x19580 + 2x19706	4xMB/75/1 + 2xMB/74/1 + 2xMB/74/2	**8162080002**	**810800J**	72	8x18x15.5-180°
	74-		•	**1958109580**	**1970705370**		410	223x17.9/7.9x219 223x18.0/15.4x174 223x19x173.66			19581 19582 19707	4x19581 + 2x19582 + 2x19707	4xMB/77/1 + 2xMB/76/1 + 2xMB/76/2	**8162080002**	**810800J**	72	8x18x15.5-180°
N116/3, N116 *(: Scania)*	87-	•	•	**1907509580**	**1907501820** **1907509530**		413	178x19.1x192			19075	8x19075	8xSV/8/1	**8130074001**		96	6.35x18x11.5-180°

Jetliner

N208 *(19.5" ZF gearbox)*	98-	•	•		**1950303320**		360	170x16.0x315			19503	4x19503	4xCW/3/1	**8103080003**	**810800J**	72	8x15x15.5-180°
N208, N210	74-	•			**1729705380**		418	100x15.3x213			17297	8x17297	8xMB/67/1	**8103080003**	**810800J**	64	8x15x15.5-180°
	74-		•		**1729805380**		418	120x15.0x213			17298	8x17298	8xMB/68/1	**8103080003**	**810800J**	64	8x15x15.5-180°
N212H, N213H, N213SHD, N214H, N214SHD	09/85-		•		**2968805440**		315	109.6x25x99			29688	8x29688					
N212H *(: Knorr(SB 7000))* **N213H, N214H, N214SHD**	92-	•			**2910815390**		430	248x30x109	**567800J**		29108	4x29108					
N212H, N213H, N214H, SHD	92-		•		**1969905380**		410	220x17.5/15.7x196 220x17.4/6.3x196 220x18.45x196			19699 19847 19848	2x19699 + 2x19847 + 4x19848	2xPB/18/2 + 2xPB/18/1 + 4xPB/19/1	**8103100002**	**811000J**	96	10x18x18-180°
N212, N213, N312, N313, N412, N413	74-	•			**1912505450**		370	160x19.4x156			19125	8x19125	8xMB/61/1	**8103080005**	**810800J**	64	8x18x15.5-180°
	74-		•		**1946605450**		370	220x19.4x156			19466	8x19466	8xMB/58/3	**8103080005**	**810800J**	80	8x18x15.5-180°
N214, N216, N218, N314, N316, N414, N416 *(: Daf)*	74-82	•			**1726305700**		419	127x18.5/9.4x211 127x18.5/13.8x218			17263 17264	4x17263 + 4x17264	4xDF/22/2 + 4xDF/23/2	**8158057001**	**810635J**	80	6.35x15.88x11.9-150°(L10/10-10)
	74-82		•	**1925609580**	**1925605700**		419	178x18.5/9.4x211 178x18.5/13.8x218			19256 19260	4x19256 + 4x19260	4xDF/16/1 + 4xDF/17/2	**8158057001**	**810635J**	112	6.35x15.88x11.9-150°(L10/10-10)
N214, N216, N218, N314, N316, N414, N416 *(: Mercedes Benz)*	74-82	•			**1970605370** **1957909580**		410	163x17.9/8.0x219 163x18.0/15.4x174 163x19x173.66			19579 19580 19706	4x19579 + 2x19580 + 2x19706	4xMB/75/1 + 2xMB/74/1 + 2xMB/74/2	**8162080002**	**810800J**	72	8x18x15.5-180°
	74-82		•		**1970705370** **1958109580**		410	223x17.9/7.9x219 223x18.0/15.4x174 223x19x173.66			19581 19582 19707	4x19581 + 2x19582 + 2x19707	4xMB/77/1 + 2xMB/76/1 + 2xMB/76/2	**8162080002**	**810800J**	72	8x18x15.5-180°
N326, N426 *(: Henschel)*			•		**1944905380**		420	180x18.8/14.8x191 180x18.7/10.7x195			19449 19450	4x19449 + 4x19450	4xHJ/20/1 + 4xHJ/21/1	**8103080007**	**810800J**	64	8x20x15.5-180°

© JURID / All rights reserved 2005

© JURID / All rights reserved 2005

				STOCK	STOCK	mm						WVA	BFMC	JURID	SUPASET	#			
Neoplan...																			
Jetliner...																			
N326, N426 *(: Mercedes Benz)*		•			**1970605370** **1957909580**		410	163x17.9/8.0x219 163x18.0/15.4x174 163x19x173.66			19579 19580 19706	4x19579 + 2x19580 + 2x19706	4xMB/75/1 + 2xMB/74/1 + 2xMB/74/2	**8162080002**	**810800J**	72	8x18x15.5-180°
		•			**1970705370** **1958109580**		410	223x17.9/7.9x219 223x18.0/15.4x174 223x19x173.66			19581 19582 19707	4x19581 + 2x19582 + 2x19707	4xMB/77/1 + 2xMB/76/1 + 2xMB/76/2	**8162080002**	**810800J**	72	8x18x15.5-180°
N326, N426	-85	•			**2968805440**		315	109.6x25x99	**567803J**		29688	8x29688							
	-85	•			**2978205440**		315	109.6x27.5x99	**567803J**		29782	8x29782							
N407, N409	-09/85	•			**2968805440**		315	109.6x25x99	**567803J**		29688	8x29688							
	-09/85	•			**2978205440**		315	109.6x27.5x99	**567803J**		29782	8x29782							
	-09/85		•	**1790009580**	**1790003270**		325	146.5x12.1x301 146.5x12.1x251			17900 17901	2x17900 + 2x17901	2xMP/39/1 + 2xMP/40/1	**8103080007**	**810800J**	44	8x20x15.5-180°
N416	83-	•			**1907405380**		410	160x17.5/15.7x196 160x17.4/6.3x196			19074 19850	4x19074 + 4x19850	4xPB/17/2 + 4xPB/16/1	**8103100002**	**811000J**	64	10x18x18-180°
	94-	•			**2968805440**		315	109.6x25x99	**567803J**		29688	8x29688							
	94-	•			**2978205440**		315	109.6x27.5x99	**567803J**		29782	8x29782							
	-94	•			**2974705440** **2974709560**		460	139x32x121	**567115J**		29747	8x29747							
	-94	•			**2996905440**		460	139x34.5x121	**567115J**		29969	8x29969							
	83-		•		**1969905450**		410	220x17.5/15.7x196 220x17.4/6.3x196 220x18.45x196			19699 19847 19848	2x19699 + 2x19847 + 4x19848	2xPB/18/2 + 2xPB/18/1 + 4xPB/19/1	**8103100002**	**811000J**	96	10x18x18-180°
Metroliner																			
MIC4008, MIC4012, MIC4017	90-	•			**1907405380**		410	160x17.5/15.7x196 160x17.4/6.3x196			19074 19850	4x19074 + 4x19850	4xPB/17/2 + 4xPB/16/1	**8103100002**	**811000J**	64	10x18x18-180°
	90-		•		**1969905450**		410	220x17.5/15.7x196 220x17.4/6.3x196 220x18.45x196			19699 19847 19848	2x19699 + 2x19847 + 4x19848	2xPB/18/2 + 2xPB/18/1 + 4xPB/19/1	**8103100002**	**811000J**	96	10x18x18-180°
	94-	•			**2968805440**			109.6x25x99			29688	8x29688							
	94-	•			**2974705440** **2974709560**			139x32x121			29747	8x29747							
Niederflurbusse																			
N4009 *(LNF,NF)* **N4007, N4014, N4016, N4021** *(NF)*	88-	•			**1907405450**		410	160x17.5/15.7x196 160x17.4/6.3x196			19074 19850	4x19074 + 4x19850	4xPB/17/2 + 4xPB/16/1	**8103100002**	**811000J**	64	10x18x18-180°
N4007, N4009, N4014, N4016, N4021	92-	•			**2974705440** **2974709560**			139x32x121			29747	8x29747							
N4009 *(LNF,NF)* **N4007, N4014, N4016, N4021** *(NF)*	88-		•		**1900405380** **1900405450**		410	220x16.1/14.1x211 220x19.9/11.3x211 220x16.8x210.8			19004 19743 19755	2x19004 + 2x19743 + 4x19755	2xPB/32/2 + 2xPB/32/1 + 4xPB/31/1	**8103100002**	**811000J**	96	10x18x18-180°
N4008, N4009, N4010, N4011, N4014, N4016, N4024, N4026	92-	•			**2910815390**		430	248x30x109	**567801J**		29108	4x29108							
	92-		•		**1969905450**		410	220x17.5/15.7x196 220x17.4/6.3x196 220x18.45x196			19699 19847 19848	2x19699 + 2x19847 + 4x19848	2xPB/18/2 + 2xPB/18/1 + 4xPB/19/1	**8103100002**	**811000J**	96	10x18x18-180°

© JURID / All rights reserved 2005

© JURID / All rights reserved 2005

				STOCK	STOCK	⌀ mm					WVA	BFMC	JURID	SUPASET	#				
Neoplan…																			
Niederflurbusse…																			
⊢⊣ : Eaton		•	•		1989603270 1989609530		420	178x18.5x197			19896	8x19896	8xAX/14/6	**8158056001**	**810635J**	112	6.35x14.29x11.9-150°(L9/10-9)
Setra SG																			
SG215, SG219*(N 26)*		•			**1907405380**		410	160x17.5/15.7x196 160x17.4/6.3x196			19074 19850	4x19074 + 4x19850	4xPB/17/2 + 4xPB/16/1	**8103100002**	**811000J**	64	10x18x18-180°
			•		**1900405380** **1900405450**		410	220x16.1/14.1x211 220x19.9/11.3x211 220x16.8x210.8			19004 19743 19755	2x19004 + 2x19743 + 4x19755	2xPB/32/2 + 2xPB/32/1 + 4xPB/31/1	**8103100002**	**811000J**	96	10x18x18-180°
			•		**1969905380**		410	220x17.5/15.7x196 220x17.4/6.3x196 220x18.45x196			19699 19847 19848	2x19699 + 2x19847 + 4x19848	2xPB/18/2 + 2xPB/18/1 + 4xPB/19/1	**8103100002**	**811000J**	96	10x18x18-180°
Skyliner																			
N122/3	92-	•			**2910815390**		430	248x30x109	**567801J**		29108	4x29108							
	92-		•		**1969905380**		410	220x17.5/15.7x196 220x17.4/6.3x196 220x18.45x196			19699 19847 19848	2x19699 + 2x19847 + 4x19848	2xPB/18/2 + 2xPB/18/1 + 4xPB/19/1	**8103100002**	**811000J**	96	10x18x18-180°
N122, N138*(⊢⊣ : Daf)*	74-	•			**1726305700**		419	127x18.5/9.4x211 127x18.5/13.8x218			17263 17264	4x17263 + 4x17264	4xDF/22/2 + 4xDF/23/2	**8158057001**	**810635J**	80	6.35x15.88x11.9-150°(L10/10-10)
	74-		•	**1925609580**	**1925605700**		419	178x18.5/9.4x211 178x18.5/13.8x218			19256 19260	4x19256 + 4x19260	4xDF/16/1 + 4xDF/17/2	**8158057001**	**810635J**	112	6.35x15.88x11.9-150°(L10/10-10)
N122, N138*(⊢⊣ : Mercedes Benz)*	74-	•	•		**1970605370** **1957909580**		410	163x17.9/8.0x219 163x18.0/15.4x174 163x19x173.66			19579 19580 19706	4x19579 + 2x19580 + 2x19706	4xMB/75/1 + 2xMB/74/1 + 2xMB/74/2	**8162080002**	**810800J**	72	8x18x15.5-180°
	74-		•		**1970705370** **1958109580**		410	223x17.9/7.9x219 223x18.0/15.4x174 223x19x173.66			19581 19582 19707	4x19581 + 2x19582 + 2x19707	4xMB/77/1 + 2xMB/76/1 + 2xMB/76/2	**8162080002**	**810800J**	72	8x18x15.5-180°
Spaceliner																			
N117/2, N117/3	92-	•			**2910815390**		430	248x30x109	**567800J**		29108	4x29108							
	92-		•		**1969905380**		410	220x17.5/15.7x196 220x17.4/6.3x196 220x18.45x196			19699 19847 19848	2x19699 + 2x19847 + 4x19848	2xPB/18/2 + 2xPB/18/1 + 4xPB/19/1	**8103100002**	**811000J**	96	10x18x18-180°
Transliner																			
N312, N314, N316*(L)*	92-	•			**2910815390**		430	248x30x109	**567800J**		29108	4x29108							
	92-		•		**1969905380**		410	220x17.5/15.7x196 220x17.4/6.3x196 220x18.45x196			19699 19847 19848	2x19699 + 2x19847 + 4x19848	2xPB/18/2 + 2xPB/18/1 + 4xPB/19/1	**8103100002**	**811000J**	96	10x18x18-180°
N312, N316	92-	•			**2910815390**		430	248x30x109			29108	4x29108							
Nicolas																			
⊢⊣ : BPW		•		**1909409580**	**1909404040** **1909401250**		420	200x17.5/10.5x204			19094	8x19094	8xBC/97/1	**8162080001**	**810800J**	80	8x15x15.5-180°
			•	**1957409550**	**1957404040** **1957401250**		300	200x18.0/11.0x145			19574	8x19574	8xBC/80/1	**8162080001**	**810800J**	64	8x15x15.5-180°

© JURID / All rights reserved 2005

© JURID / All rights reserved 2005

Nicolas...

...

... : Colaert *(1016)*, : Colaert *(E916)*, : Colaert *(ED 1016)*	•		**1761203320**	305	125x10.0x275		17612	4x17612		**8102060004**		48	6x13.5x11-180°
: Colaert *(E1015 F)*, : Colaert *(SRNT 591)*	•		**1940503290**	305	200x12.0x141		19405	8x19405		**8103080003**	**810800J**	80	8x15x15.5-180°
: Colaert *(E918 F)*	•		**1724703320**	406	100x10.0x346 100x10.0x284		17247 17305	2x17247 + 2x17305	2xSA/8/1 + 2xSA/9/1	**8102050010**	**810500J**	52	5x13.5x11-180°(CT/BK)
: ROR 15"	•	**1960409550**	**1960403290** **1960401230**	311	190x15.3/10.8x126 190x16.1/13.1x158		19604 19605	4x19604 + 4x19605	4xRW/9/2 + 4xRW/13/2	**8158057001**	**810635J**	80	6.35x15.88x11.9-150°(L10/10-10)
: ROR	•		**1936904040**	419	219x18.5/10.5x196 219x18.6/15.2x190		19369 19370	4x19369 + 4x19370	4xFU/4/2 + 4xFU/5/2	**8158057001**	**810635J**	96	6.35x15.88x11.9-150°(L10/10-10)
: SAE Dupillier *(SRB 22)*, : SAE Dupillier *(SRC 20)*, : SAE Dupillier *(SRT 215)*	•		**1935903290**	414	150x19.0/9.1x202 151x19.0/14.8x200		19359 19360	4x19359 + 4x19360		**8102060009**		64	6x18x12-180°
: SAE Dupillier *(SRB 22)*, : SAE Dupillier *(SRN 25)*	•		**1944403290**	305	180x11.5x265		19444	4x19444		**8103060007**	**810600J**	64	6x15x11.5-180°
: SAE Dupillier	•	**1976209550**	**1976203290** **1976201250**	305	200x16.3/14.6x143 200x15.2/8.7x143		19762 19763	4x19762 + 4x19763	4xLZ/2/1 + 4xLZ/3/1	**8103080005**	**810800J**	64	8x18x15.5-180°
	•		**1936703290**	414	211x17.7/9.6x202 211x18.6/15.2x220		19367 19368	4x19367 + 4x19368		**8102060009**		96	6x18x12-180°
: SAF Sauer	•		**1928304040**	420	180x19.6/16.4x189 180x19.0/12.0x194		19283 19284	4x19283 + 4x19284	4xSJ/28/1 + 4xSJ/29/1	**8103080005**	**810800J**	64	8x18x15.5-180°
	•		**1947703290**	419	203x18.4/15.3x189 203x18.8/11.9x195		19477 19478	4x19477 + 4x19478	4xSJ/30/1 + 4xSJ/31/1	**8103080005**	**810800J**	64	8x18x15.5-180°
: SMB	•		**1967203290**	419	150x18.2/11.5x194 150x18.6/15.7x188		19672 19673	4x19672 + 4x19673	4xFT/8/1 + 4xFT/9/1	**8103050014**	**810500J**	96	5x16x12-180°
	•		**1904904040**	414	150x12.5x347 285x12.5x285		19049 19199	2x19049 + 2x19199	2xSA/10/1 + 2xSA/11/1	**8102060005**		96	6x13.5x12-180°

Nieper

GA2, GA2.5	•		**1108401160**	250	40x5.0x245		11084	4x11084	4xBC/51/1	**8103040002**	**810400J**	40	4x8x7.5-180°
GA3, GA4, GA5	•		**1500405380**	300	60x5.0x290		15004	4x15004	4xBC/52/1	**8102040003**	**810400J**	64	4x10x7.5-180°
GA4, GA5, GA6	•		**1504404210**	350	60x6.0x339		15044	4x15044	4xFD/85/1	**8103060002**	**810600J**	40	6x10x11.5-180°
GA5, GA6	•		**1524705380**	400	80x8.0x389		15247	4x15247	4xFD/86/1	**8162080001**	**810800J**	40	8x15x15.5-180°

Nissan (Ebro)

500D														
Van	61-	•	•	**1586009530**	332	85x7.0x254 85x7.5x352		15860 15862	2x15860 + 2x15862					
B35														
	61-	•	•	**1586009530**	332	85x7.0x254 85x7.5x352		15860 15862	2x15860 + 2x15862					
C150														
	61-	•	•	**1586009530**	332	85x7.0x254 85x7.5x352		15860 15862	2x15860 + 2x15862					

© JURID / All rights reserved 2005

© JURID / All rights reserved 2005

Nissan (Ebro)...

C151												
	61-	•	•	**1586009530**		332	85x7.0x254 85x7.5x352			15860 15862	2x15860 + 2x15862	
C153												
	61-	•	•	**1586009530**		332	85x7.0x254 85x7.5x352			15860 15862	2x15860 + 2x15862	
C350-353												
	61-	•	•	**1586009530**		332	85x7.0x254 85x7.5x352			15860 15862	2x15860 + 2x15862	
C450-452												
	61-	•	•	**1586009530**		332	85x7.0x254 85x7.5x352			15860 15862	2x15860 + 2x15862	
Cabstar												
BF22, EGF22, PGF22, TF22, TGF22, YF22 *(O) : Sumitomo)*	01/82-10/88	•		**572360**		252	142x15x53.2	**561222**				
BF22, EGF22, PGF22, TF22, TGF22, YF22 *(O) : Akebono)*	01/82-10/88	•		**572361**		252	142x16.7x53.4	**561222**		20863	4x20863	
E110.35, E120.35, E120.45 *(O) : Bosch)*	05/98-	•		**2343005390**			168.7x18x67			23430	4x23430	
E110.35, E90.32 *(O) : Bosch)*	05/98-	•		**2343005390**		263	168.7x18x67	**561708**		23430	4x23430	
E35												
	61-	•	•	**1586009530**		332	85x7.0x254 85x7.5x352			15860 15862	2x15860 + 2x15862	
E60												
	61-	•	•	**1586009530**		332	85x7.0x254 85x7.5x352			15860 15862	2x15860 + 2x15862	
E70												
	61-	•	•	**1586009530**		332	85x7.0x254 85x7.5x352			15860 15862	2x15860 + 2x15862	
EcoT												
T100	98-	•		**2910009560**		263	214x25x112	**561998B**		29100	4x29100	
F275												
	82-	•		**2998404612**		263	166.5x17x62	**561998B**		29984	4x29984	
F350												
	82-	•		**2998404612**		263	166.5x17x62	**561998B**		29984	4x29984	
	82-		•	**1351300**		254				13513	4x13513	4xGG/172
	-81		•	**1351300**		254				13513	4x13513	4xGG/172

© JURID / All rights reserved 2005

© JURID / All rights reserved 2005

				→STOCK	STOCK→	∅ mm				WVA	BFMC	JURID	SUPASET	#	

Nissan (Ebro)...

L35															
	82-	•		**2998404612**		263	166.5x17x62	**561998B**		29984	4x29984				
	-81	•		**1351300**		254				13513	4x13513	4xGG/172			
	82-		•	**1351300**		254				13513	4x13513	4xGG/172			
L45															
	82-	•		**2998404612**		263	166.5x17x62	**561998B**		29984	4x29984				
	-81	•		**1351300**		254				13513	4x13513	4xGG/172			
	82-		•	**1351300**		254				13513	4x13513	4xGG/172			
Trade															
2.0DKB, 2.8DKB*(6 holes)*	01/84-	•		**2998404612**		263	166.5x17x62	**561708B**		29984	4x29984				
2.0DKB, 2.8DKB*(5 holes)*	01/84-	•		**2998404612**		263	166.5x17x62	**561998B**		29984	4x29984				
Atleon															
110	02/99-	•				263		**561998B**							
L60															
	80-	•		**1795209530**		310	100.5x6.0x283.5			17952	4x17952			56	5.56x12.7x10.72-150°(K8)
	-80	•		**1795309530**		331	100.5x7.0x302.3			17953	4x17953		**8102040003**	**810400J**	64	4x10x7.5-180°
	80-		•	**1795309530**		331	100.5x7.0x302.3			17953	4x17953		**8102040003**	**810400J**	64	4x10x7.5-180°
L75															
	83-	•		**1794009530**		330	101x7.9x304			17940	4x17940	4xLH/94/1		64	4x10x8-150°(G6)
L80															
	92-	•	•	**2906709560**		322	175.5x22x78			29067	4x29067				
	-92	•	•	**1782705380** **1782709530**		325	120x12.5x251 120x12.5x209			17827 17828	2x17827 + 2x17828	2xSA/28/1 + 2xSA/29/1	**8102050009**	**810500J**	60	5x13x9.5-180°
	80-	•		**1795209530**		310	100.5x6.0x283.5			17952	4x17952			56	5.56x12.7x10.72-150°(K8)
	-80	•		**1795309530**		331	100.5x7.0x302.3			17953	4x17953		**8102040003**	**810400J**	64	4x10x7.5-180°
	80-		•	**1795309530**		331	100.5x7.0x302.3			17953	4x17953		**8102040003**	**810400J**	64	4x10x7.5-180°
M100															
14DC		•	•	**1992809530**		362	170x20.0/13.5x165			19928	8x19928	8xRW/26/1	**8158056001**	**810635J**	96	6.35x14.29x11.9-150°(L9/10-9)
	73-	•	•	**1754609580**		394	127x12.7x360			17546	4x17546	4xGG/118/1	**8158056001**	**810635J**	48	6.35x14.29x11.9-150°(L9/10-9)
M110															
14, 14DC		•	•	**1992809530**		362	170x20.0/13.5x165			19928	8x19928	8xRW/26/1	**8158056001**	**810635J**	96	6.35x14.29x11.9-150°(L9/10-9)
M125															
14, 17		•	•	**1992809530**		362	170x20.0/13.5x165			19928	8x19928	8xRW/26/1	**8158056001**	**810635J**	96	6.35x14.29x11.9-150°(L9/10-9)
	73-	•	•	**1754609580**		394	127x12.7x360			17546	4x17546	4xGG/118/1	**8158056001**	**810635J**	48	6.35x14.29x11.9-150°(L9/10-9)

JURID by Honeywell
© JURID / All rights reserved 2005
© JURID / All rights reserved 2005
JURID by Honeywell

			STOCK	STOCK	mm				WVA	BFMC	JURID	SUPASET	#	

Nissan (Ebro)...

...

M130														
17		•	•	**1992809530**	362	170x20.0/13.5x165		19928	8x19928	8xRW/26/1	**8158056001**	**810635J**	96	6.35x14.29x11.9-150°(L9/10-9)
P137														
	73-	•	•	**1754609580**	394	127x12.7x360		17546	4x17546	4xGG/118/1	**8158056001**	**810635J**	48	6.35x14.29x11.9-150°(L9/10-9)
P160														
		•		**1907203320** **1907209530**	394	152x12.7x362		19072	4x19072	4xGG/83/1	**8158056001**	**810635J**	48	6.35x14.29x11.9-150°(L9/10-9)
			•	**1911109530**	394	177.8x12.7x358.4		19111	4x19111	4xGG/92/1	**8158056001**	**810635J**	72	6.35x14.29x11.9-150°(L9/10-9)
P170														
		•		**1907203320** **1907209530**	394	152x12.7x362		19072	4x19072	4xGG/83/1	**8158056001**	**810635J**	48	6.35x14.29x11.9-150°(L9/10-9)
			•	**1911109530**	394	177.8x12.7x358.4		19111	4x19111	4xGG/92/1	**8158056001**	**810635J**	72	6.35x14.29x11.9-150°(L9/10-9)
P190														
		•		**1907203320** **1907209530**	394	152x12.7x362		19072	4x19072	4xGG/83/1	**8158056001**	**810635J**	48	6.35x14.29x11.9-150°(L9/10-9)
			•	**1911109530**	394	177.8x12.7x358.4		19111	4x19111	4xGG/92/1	**8158056001**	**810635J**	72	6.35x14.29x11.9-150°(L9/10-9)
P200														
		•		**1911109530**	394	177.8x12.7x358.4		19111	4x19111	4xGG/92/1	**8158056001**	**810635J**	72	6.35x14.29x11.9-150°(L9/10-9)
			•	**1937129530**	394	203x12.7x386		19371	4x19371	4xGG/142/1	**8158056001**	**810635J**	72	6.35x14.29x11.9-150°(L9/10-9)
P260														
		•		**1911109530**	394	177.8x12.7x358.4		19111	4x19111	4xGG/92/1	**8158056001**	**810635J**	72	6.35x14.29x11.9-150°(L9/10-9)
			•	**1937129530**	394	203x12.7x386		19371	4x19371	4xGG/142/1	**8158056001**	**810635J**	72	6.35x14.29x11.9-150°(L9/10-9)
P270														
	75-	•		**1907203320** **1907209530**	394	152x12.7x362		19072	4x19072	4xGG/83/1	**8158056001**	**810635J**	48	6.35x14.29x11.9-150°(L9/10-9)
		•		**1907203320** **1907209530**	394	152x12.7x362		19072	4x19072	4xGG/83/1	**8158056001**	**810635J**	48	6.35x14.29x11.9-150°(L9/10-9)
	75-		•	**1937129530**	394	203x12.7x386		19371	4x19371	4xGG/142/1	**8158056001**	**810635J**	72	6.35x14.29x11.9-150°(L9/10-9)
			•	**1911109530**	394	177.8x12.7x358.4		19111	4x19111	4xGG/92/1	**8158056001**	**810635J**	72	6.35x14.29x11.9-150°(L9/10-9)
P320														
	75-	•		**1907203320** **1907209530**	394	152x12.7x362		19072	4x19072	4xGG/83/1	**8158056001**	**810635J**	48	6.35x14.29x11.9-150°(L9/10-9)
	75-		•	**1937129530**	394	203x12.7x386		19371	4x19371	4xGG/142/1	**8158056001**	**810635J**	72	6.35x14.29x11.9-150°(L9/10-9)

Northern Trailers

C12, W25	70-78	•	**1903609552**	**1903604042** **1903601232**	419	178x18.6/16.7x188 178x18.2/11.5x194		19036 19037	4x19036 + 4x19037	4xIL/66/3 + 4xIL/67/3	**8158057001**	**810635J**	96	6.35x15.88x11.9-150°(L10/10-10)
27t	69-78	•	**1903609552**	**1903604042** **1903601232**	419	178x18.6/16.7x188 178x18.2/11.5x194		19036 19037	4x19036 + 4x19037	4xIL/66/3 + 4xIL/67/3	**8158057001**	**810635J**	96	6.35x15.88x11.9-150°(L10/10-10)
32.5t	78-	•	**1960409550**	**1960403290** **1960401230**	311	190x15.3/10.8x126 190x16.1/13.1x158		19604 19605	4x19604 + 4x19605	4xRW/9/2 + 4xRW/13/2	**8158057001**	**810635J**	80	6.35x15.88x11.9-150°(L10/10-10)
24.5t,36t,40t	79-	•		**1936904040**	419	219x18.5/10.5x196 219x18.6/15.2x190		19369 19370	4x19369 + 4x19370	4xFU/4/2 + 4xFU/5/2	**8158057001**	**810635J**	96	6.35x15.88x11.9-150°(L10/10-10)

© JURID / All rights reserved 2005

© JURID / All rights reserved 2005

				STOCK	STOCK	mm			WVA	BFMC	JURID	SUPASET	#	

Nuova OMT

⊢⊣ : BPW		•	1909409550	1909404040 1909401250	420	200x17.5/10.5x204		19094	8x19094	8xBC/97/1	8162080001	810800J	80	8x15x15.5-180°
		•	1520709580		420	90x8.2x405		15207	4x15207	4xFI/79/1	8103080003	810800J	64	8x15x15.5-180°

O/Cava

⊢⊣ : BPW		•	1909409550	1909404040 1909401250	420	200x17.5/10.5x204		19094	8x19094	8xBC/97/1	8162080001	810800J	80	8x15x15.5-180°

ÖAF-Gräf & Stift AG

940, 960, 980	64-	•		1728595380	440	140x10.0x191		17285	8x17285	8xBC/2/1	8103080007	810800J	64	8x20x15.5-180°
SG*(220,240)* GSL *(240,242,GSS240,SL200,SR240, SU240)* DH*(190)*		•	1949609580 1949609530	1949605380 1949601230 1949601230	410	223x17.0/11.8x178		19496	8x19496	8xMP/36/2	8162080003	810800J	64	8x20x15.5-180°
SG*(220,240)* DH*(190)*		• •	1949409580 1949409530	1949405380 1949401230 1949401230	410	163x17.0/11.8x178		19494	8x19494	8xMP/31/2	8162080001	810800J	64	8x15x15.5-180°
GU, OSU*(210,230)* GSL *(240,242,GSS240,SL200,SR240, SU240)* GE*(110)*		•	1949409580 1949409530	1949405380 1949401230 1949401230	410	163x17.0/11.8x178		19494	8x19494	8xMP/31/2	8162080001	810800J	64	8x15x15.5-180°
OSU*(210,230)*		•		1913315450	440	200x15.0x186		1913310	8x1913310		8103080007	810800J	88	8x20x15.5-180°
Tornado*(K19-250L)*	71-	•		1728595380	440	140x10.0x191		17285	8x17285	8xBC/2/1	8103080007	810800J	64	8x20x15.5-180°

OMEP

⊢⊣ : BPW		•	1909409550	1909404040 1909401250	420	200x17.5/10.5x204		19094	8x19094	8xBC/97/1	8162080001	810800J	80	8x15x15.5-180°
⊢⊣ : ROR		•		1936504042 1936509582 1936509552	419	203x18.2/11.5x194 203x18.6/15.7x188		19365 19366	4x19365 + 4x19366	4xRW/2/5 + 4xRW/1/5	8158057001	810635J	128	6.35x15.88x11.9-150°(L10/10-10)

Opel

Movano Box

1.9 DTI(◯) *: Bosch)*	09/00-10/01	•			305	562190								

JURID by Honeywell
© JURID / All rights reserved 2005

© JURID / All rights reserved 2005
JURID by Honeywell

Opel...

Movano Box...

2.2 DTI(©) *: Bosch)*	09/00-	•			305		**562190**					

Movano Bus

1.9 DTI(©) *: Bosch)*	10/01-	•			305		**562190**					
2.2 DTI(©) *: Bosch)*	09/00-	•			305		**562190**					

Movano

1.9DTI, 2.2DTI	00-01	•		**571932J**	280	139x18x68	**562105**		71932	4x71932		
1.9DTI, 2.2DTI, 2.5DTI	01-	•		**573107**	280	139x73.6	**562105**		23613	4x23613		
	01-	•		**573055**		115.8x51.3			23669	4x23669		
2.5 DTI(©) *: Bosch)*	10/01-	•			305		**562190**					
2.5 D(©) *: Bosch)*	07/98-09/00	•			305		**562190**					
2.5Diesel, 2.8DTI	98-01	•		**571932J**	280	139x18x68	**562105**		71932	4x71932		
2.8 DTI(©) *: Bosch)*	07/98-10/01	•			305		**562190**					

Vivaro

1.9DI, 1.9DTI, 2.016V	01-	•		**573058**		145.1x18x63.4			23099	4x23099		
	01-	•		**573059**	280	94.5x17x57	**562211**					

Optare

City *(Pacer)*	86-	•		**571255J**	281	89.8x18.5x73.5			20280	4x20280		
	86-	•		**1577505380**	270	64.8x7.0x212.2			15775	4x15775	4xVN/19/1	**8103040002** **810400J** 40 4x8x7.5-180°
Delta(⟷ *: Daf (SB220)*)	88-	•	**1990009580**	**1990005700** **1990001230**	420	150x19.1/16.8x176 150x18.5/12.8x179			19900 19901	4x19900 + 4x19901	4xDF/34/1 + 4xDF/35/1	**8158057001** **810635J** 64 6.35x15.88x11.9-150°(L10/10-10)
	88-	•		**1991405700** **1991409530**	419	240x18.6/12.9x179 240x19.2/16.9x176			19914 19915	4x19914 + 4x19915	4xDF/83/1 + 4xDF/84/1	**8158057001** **810635J** 128 6.35x15.88x11.9-150°(L10/10-10)
Star Rider *(33 seats)*	87-	•		**2983505440** **2983509560**	324	175x22x85.5	**561754J**	**587004J** **581306J**	29835	4x29835		
	87-	•		**1735105460**	300	122.2x9.3x237 122.2x9.3x269		**587005J**	17975 17351	2x17975 + 2x17351	2xMB/117/1 + 2xMB/118/2	**8103060003** **810600J** 52 6x12x11.5-180°

© JURID / All rights reserved 2005

© JURID / All rights reserved 2005

			→STOCK	STOCK→	∅ mm			WVA		BFMC	JURID	SUPASET	#	

OVA

⊢⊣ : BPW,⊢⊣ : BPW *(Eco)*		•	1909409550	1909404040 1909401250	420	200x17.5/10.5x204		19094	8x19094	8xBC/97/1	8162080001	810800J	80	8x15x15.5-180°
⊢⊣ : BPW		•	1903209550	1903204040 1903201250	420	180x17.5/10.5x204		19032	8x19032	8xBC/98/1	8162080001	810800J	80	8x15x15.5-180°
		•	1903209580	1903204040 1903201250	420	180x17.5/10.5x204		19032	8x19032	8xBC/98/1	8162080001	810800J	80	8x15x15.5-180°
		•	1957409550	1957404040 1957401250	300	200x18.0/11.0x145		19574	8x19574	8xBC/80/1	8162080001	810800J	64	8x15x15.5-180°
		•	1990209580	1990204040 1990201250	360	200x18.6/13.9x159.3 200x18.6/11.5x189.5		19902 19903	4x19902 + 4x19903	4xBC/100/1 + 4xBC/101/1	8162080001	810800J	72	8x15x15.5-180°

Panav

		•	1797109580		410	140x16.7/16.3x162 140x16.0/9.0x162		17971 17972	4x17971 + 4x17972	4xPD/5/1 + 4xPD/6/1	8103060008		72	6x16x12-180°
		•	1987909580	1987901230	410	200x16.6/9.6x162 200x16.6/16.3x162		19879 19881	4x19879 + 4x19881	4xPD/3/1 + 4xPD/4/1	8103060007	810600J	96	6x15x11.5-180°

Peak Trailers

Heavy Duty		•		1936904040	419	219x18.5/10.5x196 219x18.6/15.2x190		19369 19370	4x19369 + 4x19370	4xFU/4/2 + 4xFU/5/2	8158057001	810635J	96	6.35x15.88x11.9-150°(L10/10-10)
P18, P20, P28, P30 P24*(S3)* P32*(T4)*		•	1903609552	1903604042 1903601232	419	178x18.6/16.7x188 178x18.2/11.5x194		19036 19037	4x19036 + 4x19037	4xIL/66/3 + 4xIL/67/3	8158057001	810635J	96	6.35x15.88x11.9-150°(L10/10-10)

Pegaso

1061, 1063, 1064, 1135, 1180L/53, 1183/53, 1186/52, 1186/54, 1186/62, 1186/64, 1187/10, 1346, 2011, 2080, 2082, 2089, 2135, 2180, 2181, 2182, 2189, 2334 1323, 2323*(26)* 1331, 1334, 1436*(38)* 1217, 1223*(20)* 1236*(38R,38T)* 2431, 2434*(36)* 1231, 1234*(R)* 2331*(26,38)*	87-	•	1987909580	1987901230	410	200x16.6/9.6x162 200x16.6/16.3x162		19879 19881	4x19879 + 4x19881	4xPD/3/1 + 4xPD/4/1	8103060007	810600J	96	6x15x11.5-180°

JURID by Honeywell
© JURID / All rights reserved 2005
© JURID / All rights reserved 2005
JURID by Honeywell

				→ STOCK	STOCK →	⌀ mm				WVA	BFMC	JURID	SUPASET	#				

Pegaso...

...

...

1061, 1063, 1064, 2011 **3060***(Turbo)* **1217***(14,17)* **1214***(17)*	87-	•		**1797109580**		410	140x16.7/16.3x162 140x16.0/9.0x162		17971 17972	4x17971 + 4x17972	4xPD/5/1 + 4xPD/6/1	**8103060008**		72	6x16x12-180°
1065, 1065/1, 1098, 1098/1	77-	•		**1797109580**		410	140x16.7/16.3x162 140x16.0/9.0x162		17971 17972	4x17971 + 4x17972	4xPD/5/1 + 4xPD/6/1	**8103060008**		72	6x16x12-180°
2020*(B)* **1136, 1145***(L)*	77-		•	**1987709580**		410	160x16.6/9.6x162 160x16.6/16.3x162		19877 19878	4x19877 + 4x19878	4xPD/7/1 + 4xPD/8/1	**8103060007**	**810600J**	100	6x15x11.5-180°
1080, 1080/3, 1083, 1083/50, 1086/52, 1086/54, 1086/62, 1086/64		•		**1987709580**		410	160x16.6/9.6x162 160x16.6/16.3x162		19877 19878	4x19877 + 4x19878	4xPD/7/1 + 4xPD/8/1	**8103060007**	**810600J**	100	6x15x11.5-180°
1080, 1080/3, 1083, 1083/50, 1086/52, 1086/54, 1086/62, 1086/64 **3060***(GL,GLA,L,LA)*			•	**1987909580**	**1987901230**	410	200x16.6/9.6x162 200x16.6/16.3x162		19879 19881	4x19879 + 4x19881	4xPD/3/1 + 4xPD/4/1	**8103060007**	**810600J**	96	6x15x11.5-180°
1095*(DR,L,LDR)*		•	•	**1987709580**		410	160x16.6/9.6x162 160x16.6/16.3x162		19877 19878	4x19877 + 4x19878	4xPD/7/1 + 4xPD/8/1	**8103060007**	**810600J**	100	6x15x11.5-180°
		•			**1795709530**	408	125x17.0x161		17957	8x17957				48	
1135, 1180L/53, 1183/53, 1186/52, 1186/54, 1186/62, 1186/64, 1187/10, 1346, 2080, 2082, 2089, 2135, 2180, 2181, 2182, 2189, 2334 **1323***(26)* **1331, 1334, 1436, 2331***(38)* **1217, 1223***(20)* **1236***(38R,38T)* **1231, 1234***(R)*	87-	•		**1987709580**		410	160x16.6/9.6x162 160x16.6/16.3x162		19877 19878	4x19877 + 4x19878	4xPD/7/1 + 4xPD/8/1	**8103060007**	**810600J**	100	6x15x11.5-180°
1215*(8,9)*		•	•	**1587909580** **1587909580**		325	99.2x17.5/15.6x142		15879	8x15879	8xGG/209/1	**8103080003**	**810800J**	48	8x15x15.5-180°
1210*(6)*			•		**1798805380**	325	149.2x17.5/13.0x142		17988	8x17988	8xGG/210/1	**8103080003**	**810800J**	64	8x15x15.5-180°
1346 **1323, 2323, 2331***(26)* **1331, 1334, 1436***(38)* **1223***(20)* **1236***(38R,38T)* **1214***(17)* **1217***(14,17,20)* **2431, 2434***(36)* **1231, 1234***(R)*	87-		•	**1987709580**		410	160x16.6/9.6x162 160x16.6/16.3x162		19877 19878	4x19877 + 4x19878	4xPD/7/1 + 4xPD/8/1	**8103060007**	**810600J**	100	6x15x11.5-180°
2323, 2331*(26)* **2431, 2434***(36)*	87-	•		**1987909580**	**1987901230**	410	200x16.6/9.6x162 200x16.6/16.3x162		19879 19881	4x19879 + 4x19881	4xPD/3/1 + 4xPD/4/1	**8103060007**	**810600J**	96	6x15x11.5-180°
3050*(TT 6x6)*	87-		•	**1797109580**		410	140x16.7/16.3x162 140x16.0/9.0x162		17971 17972	4x17971 + 4x17972	4xPD/5/1 + 4xPD/6/1	**8103060008**		72	6x16x12-180°
3060*(GL,GLA,L,LA)*		•		**1797109580**		410	140x16.7/16.3x162 140x16.0/9.0x162		17971 17972	4x17971 + 4x17972	4xPD/5/1 + 4xPD/6/1	**8103060008**		72	6x16x12-180°
3060*(Turbo)*	87-		•		**1911109530**	394	177.8x12.7x358.4		19111	4x19111	4xGG/92/1	**8158056001**	**810635J**	72	6.35x14.29x11.9-150°(L9/10-9)
3060*(D)*			•		**1911109530**	394	177.8x12.7x358.4		19111	4x19111	4xGG/92/1	**8158056001**	**810635J**	72	6.35x14.29x11.9-150°(L9/10-9)

© JURID / All rights reserved 2005

© JURID / All rights reserved 2005

Pegaso...

...																
3078, 3088, 3088/2 **3076***(D)*		•	**1987909580**	**1987901230**	410	200x16.6/9.6x162 200x16.6/16.3x162		19879 19881	4x19879 + 4x19881	4xPD/3/1 + 4xPD/4/1	**8103060007**	**810600J**	96	6x15x11.5-180°
		•	**1987709580**		410	160x16.6/9.6x162 160x16.6/16.3x162		19877 19878	4x19877 + 4x19878	4xPD/7/1 + 4xPD/8/1	**8103060007**	**810600J**	100	6x15x11.5-180°
1064, 2011*(A)* **5030, 5031, 5035, 5036, 5074, 5076, 6035/4, 6035/5, 6038** **1063***(A 16t,A 20t)* **1061***(A,LA)*	87-	•	**1797109580**	**1797105450**	410	140x16.7/16.3x162 140x16.0/9.0x162		17971 17972	4x17971 + 4x17972	4xPD/5/1 + 4xPD/6/1	**8103060008**		72	6x16x12-180°
1064, 2011*(A)* **6035/4, 6035/5, 6036, 6038, 6100** **1063***(A 16t,A 20t)* **1061***(A,LA)*	87-	•	**1987909580**		410	200x16.6/9.6x162 200x16.6/16.3x162		19879 19881	4x19879 + 4x19881	4xPD/3/1 + 4xPD/4/1	**8103060007**	**810600J**	96	6x15x11.5-180°
5020, 5022, 5023, 5068, 5070, 5070/1 **6031***(A/2,N/2)* **6035***(A/1)*		•	**1797109580**	**1797105450**	410	140x16.7/16.3x162 140x16.0/9.0x162		17971 17972	4x17971 + 4x17972	4xPD/5/1 + 4xPD/6/1	**8103060008**		72	6x16x12-180°
5020, 5022, 5023 **6031***(A/2,N/2)* **6035***(A/1)*		•	**1987909580**		410	200x16.6/9.6x162 200x16.6/16.3x162		19879 19881	4x19879 + 4x19881	4xPD/3/1 + 4xPD/4/1	**8103060007**	**810600J**	96	6x15x11.5-180°
5030, 5031, 5035, 5036, 5074, 5076	87-	•	**1987709580**		410	160x16.6/9.6x162 160x16.6/16.3x162		19877 19878	4x19877 + 4x19878	4xPD/7/1 + 4xPD/8/1	**8103060007**	**810600J**	100	6x15x11.5-180°
5068, 5070, 5070/1, 6046/1, 6046/2, 6050		•	**1987709580**		410	160x16.6/9.6x162 160x16.6/16.3x162		19877 19878	4x19877 + 4x19878	4xPD/7/1 + 4xPD/8/1	**8103060007**	**810600J**	100	6x15x11.5-180°
5317*(Minibus)*	87-	• •	**1987709580**		410	160x16.6/9.6x162 160x16.6/16.3x162		19877 19878	4x19877 + 4x19878	4xPD/7/1 + 4xPD/8/1	**8103060007**	**810600J**	100	6x15x11.5-180°
6021*(AM)* **6045***(M)* **6030***(AM)*		• •	**1797109580**	**1797105450**	410	140x16.7/16.3x162 140x16.0/9.0x162		17971 17972	4x17971 + 4x17972	4xPD/5/1 + 4xPD/6/1	**8103060008**		72	6x16x12-180°
6022		•		**1795709530**	408	125x17.0x161		17957	8x17957				48	
6036, 6100	87-	•	**1987909580**		410	200x16.6/9.6x162 200x16.6/16.3x162		19879 19881	4x19879 + 4x19881	4xPD/3/1 + 4xPD/4/1	**8103060007**	**810600J**	96	6x15x11.5-180°
6046/1, 6046/2, 6050		•		**1795709530**	408	125x17.0x161		17957	8x17957				48	
6420, 6424	88-	•	**1987709580**		410	160x16.6/9.6x162 160x16.6/16.3x162		19877 19878	4x19877 + 4x19878	4xPD/7/1 + 4xPD/8/1	**8103060007**	**810600J**	100	6x15x11.5-180°
	88-	•	**1987909580**		410	200x16.6/9.6x162 200x16.6/16.3x162		19879 19881	4x19879 + 4x19881	4xPD/3/1 + 4xPD/4/1	**8103060007**	**810600J**	96	6x15x11.5-180°
		•	**1987709580**		410	160x16.6/9.6x162 160x16.6/16.3x162		19877 19878	4x19877 + 4x19878	4xPD/7/1 + 4xPD/8/1	**8103060007**	**810600J**	100	6x15x11.5-180°

© JURID / All rights reserved 2005

© JURID / All rights reserved 2005

			STOCK	STOCK	⌀ mm			WVA	BFMC	JURID	SUPASET	#	

Peitz Jun. KG

⊢⊣ : BPW	•	1903209580	1903204040 1903201250	420	180x17.5/10.5x204		19032	8x19032	8xBC/98/1	**8162080001**	**810800J**	80	8x15x15.5-180°
	•	1909409580	1909404040 1909401250	420	200x17.5/10.5x204		19094	8x19094	8xBC/97/1	**8162080001**	**810800J**	80	8x15x15.5-180°
	•		**1910204040**	300	150x10.3x142		19102	8x19102	8xBC/54/1	**8162080001**	**810800J**	64	8x15x15.5-180°
	•		**1920004040**	420	160x18.0/11.0x204		19200	8x19200	8xBC/35/1	**8162080001**	**810800J**	80	8x15x15.5-180°
	•		**1108204210**	230	40x5.0x232		11082	4x11082	4xGL/11/1	**8103040002**	**810400J**	32	4x8x7.5-180°
	•		**1108401160**	250	40x5.0x245		11084	4x11084	4xBC/51/1	**8103040002**	**810400J**	40	4x8x7.5-180°
	•		**1128404210**	250	40x5.0x261		11284	4x11284	4xBW/1/1	**8102040003**	**810400J**	40	4x10x7.5-180°
	•		**1500405380**	300	60x5.0x290		15004	4x15004	4xBC/52/1	**8102040003**	**810400J**	64	4x10x7.5-180°
	•		**1504404210**	350	60x6.0x339		15044	4x15044	4xFD/85/1	**8103060002**	**810600J**	40	6x10x11.5-180°
	•		**1524705380**	400	80x8.0x389		15247	4x15247	4xFD/86/1	**8162080001**	**810800J**	40	8x15x15.5-180°
	•		**1737704040**	420	120x18.0/11.2x204		17377	8x17377	8xBC/78/1	**8162080001**	**810800J**	80	8x15x15.5-180°
	•		**1956804040**	300	220x18.0/11.5x139		19568	8x19568		**8162080001**	**810800J**	64	8x15x15.5-180°

Perlini

100

121-27, 131-30, 131-33	•	•		**5214300010**		150.9x26x114.3		29626	8x29626				

Perrot

	•	**1982109580**		325	160x12.5x288 160x12.5x249		19821 19822	2x19821 + 2x19822	2xSY/34/1 + 2xSY/33/1	**8103060007**	**810600J**	52	6x15x11.5-180°
	•	**1581709580**	**1581703320**	325	96.5x12.0x312 96.5x12.0x258		15817 15823	2x15817 + 2x15823	2xMP/37/1 + 2xMP/38/1	**8103080007**	**810800J**	44	8x20x15.5-180°
	•	**1790009580**	**1790003270**	325	146.5x12.1x301 146.5x12.1x251		17900 17901	2x17900 + 2x17901	2xMP/39/1 + 2xMP/40/1	**8103080007**	**810800J**	44	8x20x15.5-180°
	•	**1950309580**	**1950303320**	360	170x16.0x315		19503	4x19503	4xCW/3/1	**8103080003**	**810800J**	72	8x15x15.5-180°
Mercedes Benz / Hanomag Henschel	•		**1101905460**	230	34.5x8.0x175 34.5x8.0x208 34.5x8.5x208	**587006J**	11582 11019 11025	2x11582 + 1x11019 + 1x11025	2xMB/90/1 + MB/91/2 + MB/91/3	**8102040003**	**810400J**	44	4x10x7.5-180°
	•		**1128205300**	200	30x4.0x230		11282	4x11282	4xTP/1/1	**8103040002**	**810400J**	14	4x8x7.5-180°
(O) : Powerbrake for Mechanical Actuation	•		**1128405360**	250	40x5.0x261		11284	4x11284	4xBW/1/1	**8102040003**	**810400J**	40	4x10x7.5-180°
(O) : Duplex	•		**1128505351**	180	30x3.9x180		11285	4x11285	4xBW/6/1		**810300J**	28	3x8x5.5-180°
	•		**1128604210**	230	35x4.5x251		11286	4x11286		**8103040002**	**810400J**	20	4x8x7.5-180°
	•		**1128905360**	200	40x5.0x178		11289	4x11289		**8103040002**	**810400J**	56	4x8x7.5-180°
(O) : Hydraulic Servo brake	•		**1129005380**	250	40x5.0x261		11290	4x11290		**8103040002**	**810400J**	64	4x8x7.5-180°
	•		**1149805360**	180	40x4.9x171		11498	4x11498		**8103040002**	**810400J**	40	4x8x7.5-180°
	•		**1153405800**	180	30x4.0x180		11534	4x11534			**810300J**	40	3x8x5.5-180°
Mercedes Benz / Hanomag Henschel	•		**1302005460**	260	54x8.0x201 54x8.0x233	**587006J**	13532 13020	2x13532 + 2x13020	2xMB/88/1 + 2xMB/89/2	**8102040003**	**810400J**	52	4x10x7.5-180°
(O) : Servo actuated brake	•		**1320305460**	300	50x6.0x314		13203	4x13203		**8102040003**	**810400J**	32	4x10x7.5-180°

JURID by Honeywell

© JURID / All rights reserved 2005

© JURID / All rights reserved 2005

JURID by Honeywell

			STOCK	STOCK	mm				WVA	BFMC	JURID	SUPASET	#	

Perrot...

...

(O) : Hydraulic Servo brake	•	**1320501160**	300	50x6.2x313 50x6.2x233		13205 13206	2x13205 + 2x13206		**8102050003**	**810500J**	64	5x10x9.5-180°
(O) : Servo brake	•	**1325005360**	300	50x6.0x276		13250	4x13250		**8102040003**	**810400J**	28	4x10x7.5-180°
Mercedes Benz / Hanomag Henschel	•	**1503005460**	270	79.5x8.0x210 79.5x8.0x243	**587006J**	15742 15030	2x15742 + 2x15030	2xMB/80/1 + 2xMB/81/3	**8102050003**	**810500J**	52	5x10x9.5-180°
(O) : Hydraulic Servo brake / OM	•	**1515005380**	325	80x7.2x257 80X7.20x338.16		15150 15174	2x15150 + 2x15174	2xBC/62/1 + 2xBC/63/1	**8103060003**	**810600J**	56	6x12x11.5-180°
(O) : Hydraulic Servo brake & Powerbrake for Mechanical Actuation	•	**1516305460**	400	80x8.0x311		15163	2x15163		**8102050013**	**810500J**	24	5x15x12-180°
(O) : Hydraulic Servo brake / OM	•	**1519205300**	325	80x15.6x301		15192	4x15192		**8103060003**	**810600J**	64	6x12x11.5-180°
	•	**1519305300**	315	80x10.1x282		15193	4x15193		**8103060003**	**810600J**	64	6x12x11.5-180°
(O) : Hydraulic Servo brake	•	**1521505380**	400	80x8.2x394		15215	2x15215	2xMB/22/1	**8103060007**	**810600J**	28	6x15x11.5-180°
	•	**1525605350**	180	60x5.0x177		15256	4x15256		**8103040002**	**810400J**	40	4x8x7.5-180°
(O) : Powerbrake for Mechanical Actuation	•	**1530204210**	350	60x7.0x272 60x7.0x365		15302 15303	2x15302 + 2x15303		**8103060003**	**810600J**	56	6x12x11.5-180°
	•	**1530405360**	270	60x6.1x242		15304	4x15304		**8102050003**	**810500J**	56	5x10x9.5-180°
	•	**1534004210**	350	60x7.0x321		15340	4x15340		**8103060003**	**810600J**	56	6x12x11.5-180°
(O) : Hydraulic Servo brake & Powerbrake for Mechanical Actuation	•	**1541905380**	400	80x8.7x418		15419	4x15419		**8102050003**	**810500J**	64	5x10x9.5-180°
	•	**1550505350**	250	70x5.0x262		15505	4x15505		**8102040003**	**810400J**	64	4x10x7.5-180°
	•	**1572805460**	256	80x8.0x261		15728	4x15728		**8102050003**	**810500J**	64	5x10x9.5-180°
(O) : Duo Servo	•	**1573205380**	325	80x7.0x298 80x7.0x257		15732 15733	2x15732 + 2x15733	2xFI/101/1 + 2xFI/100/1	**8103060003**	**810600J**	52	6x12x11.5-180°
	•	**1574005910**	206	60x8.2x198 34.5x8.5x208		15740 11025	4x15740		**8102040003**	**810400J**	40	4x10x7.5-180°
(O) : Hydraulic Servo brake	•	**1705005380**	400	100x8.2x311 100x8.2x418		17050 17051	2x17050 + 2x17051	2xMF/1/1 + 2xMF/2/1	**8103060003**	**810600J**	56	6x12x11.5-180°
(O) : Hydraulic Servo brake & Powerbrake for Mechanical Actuation	•	**1709205460**	400	120x10.2x430 120x10.2x324		17092 17093	2x17092 + 2x17093	2xSY/8/1 + 2xSY/9/1	**8103080003**	**810800J**	56	8x15x15.5-180°
(O) : Hydraulic Duplex brake	•	**1709403320**	400	100x10.1x331		17094	4x17094	4xSY/7/1	**8103080003**	**810800J**	48	8x15x15.5-180°
	•	**1709603270**	310	100x12.0x256 100x12.0x297		17096 17099	2x17096 + 2x17099	2xPB/23/1 + 2xPB/26/1	**8103060003**	**810600J**	52	6x12x11.5-180°
(O) : Hydraulic Servo brake	•	**1713505460**	500	120x11.8x255		17135	8x17135					
	•	**1724805380**	400	140x12.1x321		17248	4x17248	4xBC/32/2	**8103080003**	**810800J**	48	8x15x15.5-180°
	•	**1726905380** **1726909530**	400	140x12.1x321 140x12.1x425		17269 17270	4x17269 + 4x17270	4xBC/32/1 + 4xBC/33/1	**8103080003**	**810800J**	112	8x15x15.5-180°
	•	**1727205460**	400	120x12.1x425		17272	4x17272	4xBC/48/1	**8103080003**	**810800J**	64	8x15x15.5-180°
(O) : Duplex	•	**1727505380**	400	120x10.1x331		17275	4x17275	4xKM/10/1	**8103080003**	**810800J**	48	8x15x15.5-180°
	•	**1733903320**	325	120x12.0x301		17339	4x17339		**8103060003**	**810600J**	64	6x12x11.5-180°
(O) : Duplex	•	**1734005380**	400	140x10.1x331		17340	4x17340	4xBC/77/1	**8103080003**	**810800J**	48	8x15x15.5-180°
	•	**1738903270**	420	140x14.0x386		17389	4x17389	4xKM/12/1	**8146100005**		56	10x18x17.5-180°(BR)
	•	**1763503320** **1763509530**	325	120x12.0x249 120x12.0x288		17635 17636	2x17635 + 2x17636	2xSY/20/2 + 2xSY/26/1	**8103060003**	**810600J**	52	6x12x11.5-180°
	•	**1774205380**	410	140x15.8/8.8x211 140x15.9/13.5x211		17742 17743	4x17742 + 4x17743	4xPB/9/1 + 4xPB/10/1	**8103100002**	**811000J**	64	10x18x18-180°
	•	**1775805380** **1775803270**	332	120x8.1x255		17758	4x17758	4xMF/24/1	**8103060007**	**810600J**	48	6x15x11.5-180°
	•	**1775903270**	325	120x8.1x255		17759	4x17759	4xMF/24/1	**8103060007**	**810600J**	48	6x15x11.5-180°
(O) : Duo Servo brake / Iveco	•	**1776405380**	325	100x8.2x296 100x8.2x255		17764 17408	2x17764 + 2x17408	2xOM/12/1 + 2xFI/102/1	**8103060003**	**810600J**	52	6x12x11.5-180°

© JURID / All rights reserved 2005

© JURID / All rights reserved 2005

				STOCK / STOCK	⌀ mm				WVA	BFMC	JURID	SUPASET	#			

Perrot...

...

	•	**1778105380**	400	100x8.0x367 100x8.0x317		17781 17782	2x17781 + 2x17782	2xFI/109/1 + 2xFI/108/1	**8103060003**	**810600J**	52	6x12x11.5-180°
	•	**1780815460**	500	120x13.0x193 120x13.0x255		1780810 1781510	4x1780810 + 4x1781510		**8103100002**	**811000J**	56	10x18x18-180°
	•	**1788105050**	325	120x10.1/9.1x255		17881	4x17881		**8103060003**	**810600J**	48	6x12x11.5-180°
	•	**1788205380**	325	140x15.1/12.4x301		17882	4x17882		**8103060007**	**810600J**	64	6x15x11.5-180°
	•	**1790805380**	400	140x14.0x331		17908	4x17908				48	10x15x18-180°
Iveco	•	**1792403320** **1792409530**	325	100x12.0x249 100x12.0x288		17924 17925	2x17924 + 2x17925	2xFI/120/1 + 2xFI/121/1	**8103060003**	**810600J**	52	6x12x11.5-180°
	•	**1900405380** **1900405450** **1974309530**	410	220x16.1/14.1x211 220x19.9/11.3x211 220x16.8x210.8		19004 19743 19755	2x19004 + 2x19743 + 4x19755	2xPB/32/2 + 2xPB/32/1 + 4xPB/31/1	**8103100002**	**811000J**	96	10x18x18-180°
	•	**1901905380**	420	180x14.1x386		19019	4x19019	4xBC/61/1	**8146100005**		56	10x18x17.5-180°(BR)
	•	**1907405380**	410	160x17.5/15.7x196 160x17.4/6.3x196		19074 19850	4x19074 + 4x19850	4xPB/17/2 + 4xPB/16/1	**8103100002**	**811000J**	64	10x18x18-180°
	•	**1907605380** **1907605450** **1955809530**	410	180x16.1/13.8x211 180x16.0/9.0x211		19076 19559	4x19076 + 4x19559	4xPB/11/2 + 4xPB/12/1	**8103100002**	**811000J**	64	10x18x18-180°
	•	**1908405380**	410	180x17.5/15.7x196 180x17.4/6.3x196		19084 19856	4x19084 + 4x19856	4xPB/29/2 + 4xPB/30/1	**8103100002**	**811000J**	64	10x18x18-180°
	•	**1917035460**	500	160x14.7x255		19170	8x19170		**8146100005**		64	10x18x17.5-180°(BR)
Iveco	•	**1926205380** **1926209530**	410	180x21.4/15.9x202.7 180x21.4x202.71	**587030J**	19262 19342	6x19262 + 2x19342	6xPB/25/1 + 2xPB/25/2	**8103080005**	**810800J**	112	8x18x15.5-180°
	•	**1926305380** **1926309530**	410	200x21.4/15.9x202.7 200x21.4x202.71	**587030J**	19263 19343	6x19263 + 2x19343	6xPB/24/1 + 2xPB/24/2	**8103080005**	**810800J**	112	8x18x15.5-180°
	•	**1958635460**	500	160x15.1x193		19586	8x19586		**8146100005**		48	10x18x17.5-180°(BR)
	•	**1963405380**	410	160x15.8/8.7x211 160x15.9/13.6x211		19634 19365	4x19634 + 4x19365	4xPB/27/1 + 4xPB/28/1	**8103100002**	**811000J**	64	10x18x18-180°
	•	**1968705460**	500	160x17.8/12.6x253		19687	8x19687		**8146100005**		64	10x18x17.5-180°(BR)
	•	**1969005460**	500	200x17.8/12.6x253		19690	8x19690		**8146100005**		64	10x18x17.5-180°(BR)
	•	**1969905380** **1984709530**	410	220x17.5/15.7x196 220x17.4/6.3x196 220x18.45x196		19699 19847 19848	2x19699 + 2x19847 + 4x19848	2xPB/18/2 + 2xPB/18/1 + 4xPB/19/1	**8103100002**	**811000J**	96	10x18x18-180°
	•	**1972315460**	410	180x18.9/13.7x178		1972310	8x1972310				64	
	•	**1975405380** **1975403320**	410	200x18.0/11.2x207		19754	8x19754	8xFI/115/1	**8103100003**	**811000J**	96	10x20x18-180°
	•	**1983805380** **1983809530**	410	220x18.0/12.0x207 220x18.6x207.17		19824 19838	6x19824 + 2x19838	6xPB/35/1 + 2xPB/35/2	**8103100002**	**811000J**	112	10x18x18-180°
	•	**1991803320** **1991809530**	360	170x14.0x318		19918	4x19918	4xFI/124/1	**8103080003**	**810800J**	72	8x15x15.5-180°

Perrot (Wabco)

(O) : **Wabco** *(PAN19-2)* **19.5"**	01-	•	•		**2914209569**		204.6x30x99.6		29142	4x29142						
(O) : **Wabco** *(PAN19-1)* **19.5"**	02-	•	•		**2915905399**		210.45x30x92.3		29159	4x29159						
		•	•	**2905503010**	**2905509560**		175.8x22x77		29055	4x29055						
(O) : **Wabco** *(PAN19)* **19.5"**		•	•	**2912605399**	**2915905399**		210.5x30x92		29126	4x29126						

© JURID / All rights reserved 2005

© JURID / All rights reserved 2005

→STOCK STOCK→ mm WVA BFMC JURID SUPASET #

Perrot (Wabco)...

...

Iveco		•	•		2900109561		174.4x20x69		29001	4x29001	
		•	•		2901709560		191x23x87		29017	4x29017	
		•	•		2902409561		191x23x87		29024	4x29024	
		•	•		2907705390 2907709561		204x27x106		29077	4x29077	
(O) : Wabco (*PAN17*) 17.5"		•	•		2908809560		175.6x26x85		29088	4x29088	
Iveco		•			2901605440		160x28x111		29016	4x29016	
		•			2901605441 2901609561		160x28x111		29016	8x29016	
			•	2904905590			138x14x82		29049	2x29049	
			•		2905405590		138x11x82		29054	2x29054	
(O) : Wabco (*PAN22-1*) 22.5"			•		2916205399		210.45x31x109.6		29162	4x29162	

Peugeot

Boxer											
1.9D, 1.9TD, 2.0i, 2.5D, 2.5TD *(270C +ABS,310C +ABS,320 +ABS)*	94-	•			571839J	280	145x19.5x59	561984J		21797	4x21797
1.9D, 1.9TD, 2.0i, 2.5D, 2.5TD *(270C,310C,320)*	94-	•			571839J	280	145x19.5x59	561992J		21797	4x21797
1.9D, 1.9TD, 2.0i, 2.5D, 2.5TD	94-		•		362337J	254	254x57				
1.9D, 1.9TD, 2.0i, 2.5TD, 2.8HDI *(+ABS 1.4t,1t)*	99-	•			573060	280	113.4x19.5x56.3	561984J		21627	4x21627
2.0HDI, 2.0i, 2.2HDI, 2.8HDI *(1t - 1.4t)*	02-	•			573113		140.8x19x66				
2.0HDI, 2.0i, 2.2HDI, 2.8HDI *(1.8t)*	02-	•			573114		164.8x19x69.3				
2.0HDI, 2.0i, 2.2HDI, 2.8HDI *(1t - 1.8t)*	02-		•		573115		146.7x20x59.5				
2.0i, 2.5D, 2.5TD *(350)*	94-	•			571840J	300	160x19.5x62.8	561969J		21799	4x21799
	94-		•		362338J	254	254x57				
2.0i, 2.5D, 2.5TD, 2.8HDI *(+ABS 1.8t)*	99-	•			573061	300	127.6x19.5x55	561969J		21799	4x21799
Expert											
1.4, 1.9D, 1.9TD	96-	•			571843J	257	139.8x19x69	562033J		23003	4x23003
J5											
1.8, 1.9D, 2, 2.5TD	81-94		•		361283J	254	254x57				

JURID by Honeywell © JURID / All rights reserved 2005
© JURID / All rights reserved 2005 JURID by Honeywell

										WVA	BFMC	JURID	SUPASET	#		

Peugeot...

J5...																
1.8, 2.5TD	87-	•		**571393J**		290	144.9x19.7x71.8	**561339J**			21206	4x21049				
1.9D, 2	81-84	•		**571304J**		256	130x19.2x71	**561159J**			20787 20741	2x20787 + 2x20741				
	84-94	•		**571304J**		256	130x19.2x71	**561321J**			20787 20741	2x20787 + 2x20741				
J7																
	73-85	•		**571217J**		280	144.1x15x58.8	**561099J**			20366 20367	2x20366 + 2x20367				
	73-85		•	**361241J**		300	300x55									
J9																
	73-85	•		**571217J**		280	144.1x15x58.8	**561099J**			20366 20367	2x20366 + 2x20367				
	85-	•		**571340J**		280	144.1x18x58.8	**561099J**			20366 20367	2x20366 + 2x20367				
	85-		•	**361241J**		300	300x55									

Prim-Ball

⊢⊣ : BPW		•	**1903209580**	**1903204040** **1903201250**	420	180x17.5/10.5x204		19032	8x19032	8xBC/98/1	**8162080001**	**810800J**	80	8x15x15.5-180°		
		•	**1909409580**	**1909404040** **1909401250**	420	200x17.5/10.5x204		19094	8x19094	8xBC/97/1	**8162080001**	**810800J**	80	8x15x15.5-180°		
		•	**1987909580**	**1987901230**	410	200x16.6/9.6x162 200x16.6/16.3x162		19879 19881	4x19879 + 4x19881	4xPD/3/1 + 4xPD/4/1	**8103060007**	**810600J**	96	6x15x11.5-180°		
		•	**1903609580**	**1903604040** **1903601230**	419	178x19.0/16.0x189 178x18.2/11.5x194		19036 19037	4x19036 + 4x19037	4xRW/5/4 + 4xRW/6/4	**8103050014**	**810500J**	96	5x16x12-180°		

Primrose

⊢⊣ : ROR		•	**1903609552**	**1903604042** **1903601232**	419	178x18.6/16.7x188 178x18.2/11.5x194		19036 19037	4x19036 + 4x19037	4xIL/66/3 + 4xIL/67/3	**8158057001**	**810635J**	96	6.35x15.88x11.9-150°(L10/10-10)		
⊢⊣ : ROR 15"		•	**1960409550**	**1960403290** **1960401230**	311	190x15.3/10.8x126 190x16.1/13.1x158		19604 19605	4x19604 + 4x19605	4xRW/9/2 + 4xRW/13/2	**8158057001**	**810635J**	80	6.35x15.88x11.9-150°(L10/10-10)		
⊢⊣ : ROR		•		**1936904040**	419	219x18.5/10.5x196 219x18.6/15.2x190		19369 19370	4x19369 + 4x19370	4xFU/4/2 + 4xFU/5/2	**8158057001**	**810635J**	96	6.35x15.88x11.9-150°(L10/10-10)		

JURID by Honeywell
© JURID / All rights reserved 2005
© JURID / All rights reserved 2005
JURID by Honeywell

				→STOCK	STOCK→	∅ mm				WVA		BFMC	JURID	SUPASET	#	

Raba

		•	1965709580	1965703270		414	175x13.5x370			19657	4x19657	4xBT/59/6	8103080005	810800J	72	8x18x15.5-180°
		•		1989603270 1989609530		420	178x18.5x197			19896	8x19896	8xAX/14/6	8158056001	810635J	112	6.35x14.29x11.9-150°(L9/10-9)

Renault

Master

2.5 DD *(T28 (O) : Bosch, T35 (O) : Bosch)* **1.9 dCi** *(T28 (O) : Bosch)* **2.8 dTi** *(T28 (O) : Bosch, T33 (O) : Bosch)* **2.2 dCi** *(T28 (O) : Bosch, T33 (O) : Bosch, T35 (O) : Bosch)* **2.5 dCi** *(T33 (O) : Bosch)*	07/98-	•				305		562190								
1.9dCi, 2.5dCi	01-	•		573107		280	139x73.6	562105		23613	4x23613					
	01-	•		573055		305	115.8x51.3	562164		23669	4x23669					
1.9dTi	00-	•		573055			115.8x51.3			23669	4x23669					
1.9dTi, 2.2dCi	00-	•		573107		280	139x73.6	562105		23613	4x23613					
2.2dCi	00-	•		573055		305	115.8x51.3	562164		23669	4x23669					
2.4P35, 2.4T35, 2.5P35, 2.5T35	97-98	•		571932J		278	139x18x68	561254J		71932	4x71932					
2.5D	98-01	•		571932J		280	139x18x68	562105		71932	4x71932					
2.8dTi	98-	•		571932J			139x18x68			71932	4x71932					
	98-	•		571932J		280	139x18x68	562105		71932	4x71932					
	98-	•		362370J		280	280x63									
P35, T35	81-97	•		571321J		278	120x15.5x71	561254J		20380	4x20380					
	81-94	•		361046J		255	255x57									
	94-98	•		362367J		255	254x57									

Trafic

1.9dCi100T1200, 1.9dCi80T1000, 2.0iT1000, 2.0iT1200	01-	•		573058			145.1x18x63.4			23099	4x23099					
	01-	•		573059		280	94.5x17x57	562211								

JURID by Honeywell
© JURID / All rights reserved 2005
© JURID / All rights reserved 2005
JURID by Honeywell

Renault...

Trafic...

1000, 1200, 1400, Minibus, P, T800	80-84	•		**571246J**		252	108.8x18.5x58	**561171J**			20570 20442	2x20570 + 2x20442					
	85-89	•		**571306J**	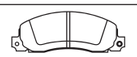	252	155.8x18.5x56	**561171J**			20927	4x20927					
Bendix	80-01		•	**362371J**		255	255x45										
Girling	89-94		•	**361046J**		255	255x57										
	94-01		•	**362367J**		255	254x57										
T1 900, T3 1100, T4 1100	89-01	•		**571246J**		252	108.8x18.5x58	**561171J**			20570 20442	2x20570 + 2x20442					
	89-01	•		**571306J**	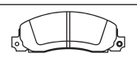	252	155.8x18.5x56	**561171J**			20927	4x20927					
T1400D	89-01	•		**571368J**	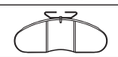	252	166.5x17x62	**561171J**			20706 20947	2x20706 + 2x20947					

Renault Trucks (Berliet)

10K, 20K, 30K	69-71	•	•		**1749705380**	356	100x10.0x302 100x10.0x349				17497 17498	2x17497 + 2x17498	2xBT/52/1 + 2xBT/53/1	**8102050009**	**810500J**	60	5x13x9.5-180°
	72-73	•	•		**1758203320**	356	100x10.0x349 100x10.0x322				17582 17805	2x17582 + 2x17805	2xSA/24/1 + 2xBT/53/1	**8102050009**	**810500J**	64	5x13x9.5-180°
130 *(B 6 Tanker,B 8 Tanker,B 9 Tanker, B 9A Tanker)*	76-80	•			**1782703320** **1782709530**	325	120x12.5x251 120x12.5x209				17827 17828	2x17827 + 2x17828	2xSA/28/1 + 2xSA/29/1	**8102050009**	**810500J**	60	5x13x9.5-180°
130*(B 11)*	78-80	•			**1758203320**	356	100x10.0x349 100x10.0x322				17582 17805	2x17582 + 2x17805	2xSA/24/1 + 2xBT/53/1	**8102050009**	**810500J**	64	5x13x9.5-180°
130 *(B 6 Tanker,B 8 Tanker,B 9 Tanker, B 9A Tanker)*	76-80		•		**1962003320**	325	150x12.5x209.4 150x12.5x251.3				19620 19621	2x19620 + 2x19621	2xSA/30/1 + 2xSA/31/1	**8102050009**	**810500J**	64	5x13x9.5-180°
130*(B 11)*	78-80		•		**1758203320**	356	100x10.0x349 100x10.0x322				17582 17805	2x17582 + 2x17805	2xSA/24/1 + 2xBT/53/1	**8102050009**	**810500J**	64	5x13x9.5-180°
130*(B 13,B 14,TB 19,TB 20,TB 21)*	78-80	•			**1780401820**	394	127x12.7x354				17804	4x17804	4xDO/80/2	**8102060005**		64	6x13.5x12-180°
150 *(B 11,B 13,B 13R,TB 19,TB 20, TB 21)*	78-80		•		**1962203320**	394	152x12.7x354				19622	4x19622	4xLH/82/2	**8102060004**		64	6x13.5x11-180°
160, 200, 250, GLR10M3	69-80	•			**1730603270**	414	125x13.5x347 125x12.5x285				17306 17309	2x17306 + 2x17309	2xBT/56/1 + 2xBT/57/1	**8103060007**	**810600J**	116	6x15x11.5-180°
	69-80		•	**1965709580**	**1965703270**	414	175x13.5x370				19657	4x19657	4xBT/59/6	**8103080005**	**810800J**	72	8x18x15.5-180°
380, 440, 500, 550, 560*(K,KE)*	72-79	•	•		**1782903320** **1782909530**	310	100x9.5x245 100x9.5x209				17829 17830	2x17829 + 2x17830	2xBT/76/1 + 2xSA/25/1	**8102050009**	**810500J**	56	5x13x9.5-180°
600, 620, 680, 700, 770, 771 *(K,KB,KB6)*	70-79	•	•		**1758203320**	356	100x10.0x349 100x10.0x322				17582 17805	2x17582 + 2x17805	2xSA/24/1 + 2xBT/53/1	**8102050009**	**810500J**	64	5x13x9.5-180°
610*(K,K6,KB)*	72-79	•	•		**1782703320** **1782709530**	325	120x12.5x251 120x12.5x209				17827 17828	2x17827 + 2x17828	2xSA/28/1 + 2xSA/29/1	**8102050009**	**810500J**	60	5x13x9.5-180°
8KB, 8KT, 8KTCDM, 8M3, 8˜160, GBC160MT	72-77	•			**1528203320**	406	90x10.0x371				15282	4x15282	4xBT/48/1	**8102050010**	**810500J**	48	5x13.5x11-180°(CT/BK)
	72-77		•		**1730703320**	406	125x10.0x346 125x10.0x284				17307 17308	2x17307 + 2x17308	2xBT/54/1 + 2xBT/55/1	**8102050009**	**810500J**	116	5x13x9.5-180°
90*(B 6,B 6A,B 7)*	78-80	•			**1782903320** **1782909530**	310	100x9.5x245 100x9.5x209				17829 17830	2x17829 + 2x17830	2xBT/76/1 + 2xSA/25/1	**8102050009**	**810500J**	56	5x13x9.5-180°
	78-80		•		**1783103320**	310	125x10.0x209 125x10.0x245				17831 17832	2x17831 + 2x17832	2xSA/27/1 + 2xSA/26/1	**8102050009**	**810500J**	64	5x13x9.5-180°

© JURID / All rights reserved 2005

© JURID / All rights reserved 2005

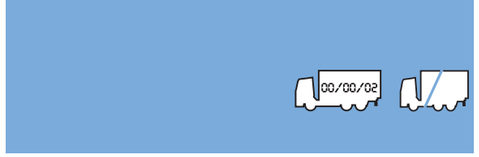



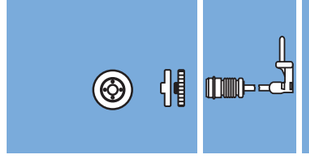

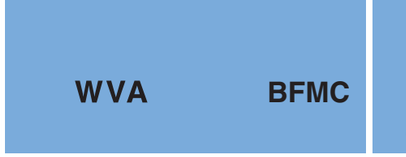

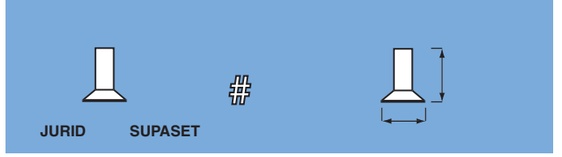

Renault Trucks (Berliet)...

...

950, 951 *(KB,KB6,KBT)*	73-79	•		**1730703320**	406	125x10.0x346 125x10.0x284		17307 17308	2x17307 + 2x17308	2xBT/54/1 + 2xBT/55/1	**8102050009**	**810500J**	116	5x13x9.5-180°
	73-79		•	**1904903270**	414	150x13x285.94 285x12.5x285		19049 19199	2x19049 + 2x19199	2xSA/10/1 + 2xSA/11/1	**8102060005**		96	6x13.5x12-180°
950 *(KB6S,KBT6S)* **GC230, GF230** *(Turbo)*	78-79		•	**1904903270**	414	150x13x285.94 285x12.5x285		19049 19199	2x19049 + 2x19199	2xSA/10/1 + 2xSA/11/1	**8102060005**		96	6x13.5x12-180°
BOM16, BOM17	66-75	•		**1730603270**	414	125x13.5x347 125x12.5x285		17306 17309	2x17306 + 2x17309	2xBT/56/1 + 2xBT/57/1	**8103060007**	**810600J**	116	6x15x11.5-180°
	66-75		•	**1904903270**	414	150x13x285.94 285x12.5x285		19049 19199	2x19049 + 2x19199	2xSA/10/1 + 2xSA/11/1	**8102060005**		96	6x13.5x12-180°
GB131, GB191, GB231 *(A,B)*	10/78-	•		**1730603270**	414	125x13.5x347 125x12.5x285		17306 17309	2x17306 + 2x17309	2xBT/56/1 + 2xBT/57/1	**8103060007**	**810600J**	116	6x15x11.5-180°
	10/78-		•	**1904903270**	414	150x13x285.94 285x12.5x285		19049 19199	2x19049 + 2x19199	2xSA/10/1 + 2xSA/11/1	**8102060005**		96	6x13.5x12-180°
GBD *(4x4)*	74-78	•	•	**1904903270**	414	150x13x285.94 285x12.5x285		19049 19199	2x19049 + 2x19199	2xSA/10/1 + 2xSA/11/1	**8102060005**		96	6x13.5x12-180°
GBH12, GBH260, GBH280 *(6x4,6x6)*	74-80		•	**1965503270**	414	175x14.0x371		19655	4x19655	4xBT/59/1	**8103080005**	**810800J**	84	8x18x15.5-180°
GBH12, GBH260, GBH280 *(6x4,6x6)* **GR305, GR320, GR350** *(A,B,Turbo)*	74-80	•		**1904903270**	414	150x13x285.94 285x12.5x285		19049 19199	2x19049 + 2x19199	2xSA/10/1 + 2xSA/11/1	**8102060005**		96	6x13.5x12-180°
GBH260, GBH280	81-	•		**1904903270**	414	150x13x285.94 285x12.5x285		19049 19199	2x19049 + 2x19199	2xSA/10/1 + 2xSA/11/1	**8102060005**		96	6x13.5x12-180°
	81-		•	**1965709580** **1965703270**	414	175x13.5x370		19657	4x19657	4xBT/59/6	**8103080005**	**810800J**	72	8x18x15.5-180°
GBK80	70-74	•		**1724703320**	406	100x10.0x346 100x10.0x284		17247 17305	2x17247 + 2x17305	2xSA/8/1 + 2xSA/9/1	**8102050010**	**810500J**	52	5x13.5x11-180°(CT/BK)
	70-74		•	**1904903270**	414	150x13x285.94 285x12.5x285		19049 19199	2x19049 + 2x19199	2xSA/10/1 + 2xSA/11/1	**8102060005**		96	6x13.5x12-180°
GC190, GC191, GC230, GC231 *(A Garbage Truck,B Garbage Truck, Turbo Garbage Truck)*	74-		•	**1904903270**	414	150x13x285.94 285x12.5x285		19049 19199	2x19049 + 2x19199	2xSA/10/1 + 2xSA/11/1	**8102060005**		96	6x13.5x12-180°
GC190, GC191, GC230, GC231 *(A Garbage Truck,B Garbage Truck, Turbo Garbage Truck)* **TLR280**	74-	•		**1904903270**	414	150x13x285.94 285x12.5x285		19049 19199	2x19049 + 2x19199	2xSA/10/1 + 2xSA/11/1	**8102060005**		96	6x13.5x12-180°
GC230, GF230 *(Turbo)*	78-79	•		**1730603270**	414	125x13.5x347 125x12.5x285		17306 17309	2x17306 + 2x17309	2xBT/56/1 + 2xBT/57/1	**8103060007**	**810600J**	116	6x15x11.5-180°
GCK160, GCK205, GCK8A/R *(A,B,R)*	68-74	•		**1730603270**	414	125x13.5x347 125x12.5x285		17306 17309	2x17306 + 2x17309	2xBT/56/1 + 2xBT/57/1	**8103060007**	**810600J**	116	6x15x11.5-180°
	68-74		•	**1904903270**	414	150x13x285.94 285x12.5x285		19049 19199	2x19049 + 2x19199	2xSA/10/1 + 2xSA/11/1	**8102060005**		96	6x13.5x12-180°
GF190, GF191, GF231 *(A,B)*	75-	•		**1904903270**	414	150x13x285.94 285x12.5x285		19049 19199	2x19049 + 2x19199	2xSA/10/1 + 2xSA/11/1	**8102060005**		96	6x13.5x12-180°
	75-		•	**1904903270**	414	150x13x285.94 285x12.5x285		19049 19199	2x19049 + 2x19199	2xSA/10/1 + 2xSA/11/1	**8102060005**		96	6x13.5x12-180°
GL900	74-79	•		**1730703320**	406	125x10.0x346 125x10.0x284		17307 17308	2x17307 + 2x17308	2xBT/54/1 + 2xBT/55/1	**8102050009**	**810500J**	116	5x13x9.5-180°
	74-79		•	**1904903270**	414	150x13x285.94 285x12.5x285		19049 19199	2x19049 + 2x19199	2xSA/10/1 + 2xSA/11/1	**8102060005**		96	6x13.5x12-180°
GLR190, GLR230 *(A 4x4)*	10/78-	•		**1904903270**	414	150x13x285.94 285x12.5x285		19049 19199	2x19049 + 2x19199	2xSA/10/1 + 2xSA/11/1	**8102060005**		96	6x13.5x12-180°
	10/78-		•	**1965709580** **1965703270**	414	175x13.5x370		19657	4x19657	4xBT/59/6	**8103080005**	**810800J**	72	8x18x15.5-180°
GPR12, GPR250	67-71	•		**1904903270**	414	150x13x285.94 285x12.5x285		19049 19199	2x19049 + 2x19199	2xSA/10/1 + 2xSA/11/1	**8102060005**		96	6x13.5x12-180°

© JURID / All rights reserved 2005

© JURID / All rights reserved 2005

				STOCK	STOCK	⌀ mm				WVA	BFMC	JURID	SUPASET	#	
Renault Trucks (Berliet)...															
...															
GR10, GR12	65-69	•			**1730603270**	414	125x13.5x347 125x12.5x285		17306 17309	2x17306 + 2x17309	2xBT/56/1 + 2xBT/57/1	**8103060007**	**810600J**	116	6x15x11.5-180°
	68-69		•	**1965709580**	**1965703270**	414	175x13.5x370		19657	4x19657	4xBT/59/6	**8103080005**	**810800J**	72	8x18x15.5-180°
GR190, GR191, GR200, GR205, GR230, GR231, GR250, GR260 *(A Garbage Truck,B Garbage Truck)*	70-	•			**1904903270**	414	150x13x285.94 285x12.5x285		19049 19199	2x19049 + 2x19199	2xSA/10/1 + 2xSA/11/1	**8102060005**		96	6x13.5x12-180°
	70-		•	**1965709580**	**1965703270**	414	175x13.5x370		19657	4x19657	4xBT/59/6	**8103080005**	**810800J**	72	8x18x15.5-180°
GR230 *(6x4)* **GR280** *(A/B 6x4)*	73-80	•	•		**1904903270**	414	150x13x285.94 285x12.5x285		19049 19199	2x19049 + 2x19199	2xSA/10/1 + 2xSA/11/1	**8102060005**		96	6x13.5x12-180°
GR305, GR320, GR350 *(A,B,Turbo)*	74-80		•	**1965709580**	**1965703270**	414	175x13.5x370		19657	4x19657	4xBT/59/6	**8103080005**	**810800J**	72	8x18x15.5-180°
GR8 *(Petrol Tanker)*	69-74	•			**1730603270**	414	125x13.5x347 125x12.5x285		17306 17309	2x17306 + 2x17309	2xBT/56/1 + 2xBT/57/1	**8103060007**	**810600J**	116	6x15x11.5-180°
	69-74		•	**1965709580**	**1965703270**	414	175x13.5x370		19657	4x19657	4xBT/59/6	**8103080005**	**810800J**	72	8x18x15.5-180°
GRH230, GRH235, GRH305 *(6x4)*	76-80	•	•		**1904903270**	414	150x13x285.94 285x12.5x285		19049 19199	2x19049 + 2x19199	2xSA/10/1 + 2xSA/11/1	**8102060005**		96	6x13.5x12-180°
GRH230, GRH305	76-80	•			**1904903270**	414	150x13x285.94 285x12.5x285		19049 19199	2x19049 + 2x19199	2xSA/10/1 + 2xSA/11/1	**8102060005**		96	6x13.5x12-180°
	76-80		•	**1965709580**	**1965703270**	414	175x13.5x370		19657	4x19657	4xBT/59/6	**8103080005**	**810800J**	72	8x18x15.5-180°
GRK12	65-73	•			**1730603270**	414	125x13.5x347 125x12.5x285		17306 17309	2x17306 + 2x17309	2xBT/56/1 + 2xBT/57/1	**8103060007**	**810600J**	116	6x15x11.5-180°
	65-73		•	**1965709580**	**1965703270**	414	175x13.5x370		19657	4x19657	4xBT/59/6	**8103080005**	**810800J**	72	8x18x15.5-180°
L648M3, L648RA *(4x4)*	66-81	•			**1528203320**	406	90x10.0x371		15282	4x15282	4xBT/48/1	**8102050010**	**810500J**	48	5x13.5x11-180°(CT/BK)
	66-81		•		**1904903270**	414	150x13x285.94 285x12.5x285		19049 19199	2x19049 + 2x19199	2xSA/10/1 + 2xSA/11/1	**8102060005**		96	6x13.5x12-180°
PM4 *(Mixer)*	64-73	•			**1730603270**	414	125x13.5x347 125x12.5x285		17306 17309	2x17306 + 2x17309	2xBT/56/1 + 2xBT/57/1	**8103060007**	**810600J**	116	6x15x11.5-180°
	64-73		•		**1904903270**	414	150x13x285.94 285x12.5x285		19049 19199	2x19049 + 2x19199	2xSA/10/1 + 2xSA/11/1	**8102060005**		96	6x13.5x12-180°
TAK160, TAK205, TAK250 *(A,B,C)*	71-75	•			**1724703320**	406	100x10.0x346 100x10.0x284		17247 17305	2x17247 + 2x17305	2xSA/8/1 + 2xSA/9/1	**8102050010**	**810500J**	52	5x13.5x11-180°(CT/BK)
	71-75		•		**1904903270**	414	150x13x285.94 285x12.5x285		19049 19199	2x19049 + 2x19199	2xSA/10/1 + 2xSA/11/1	**8102060005**		96	6x13.5x12-180°
TAK70, TAK70S, TAK75	68-73		•		**1730703320**	406	125x10.0x346 125x10.0x284		17307 17308	2x17307 + 2x17308	2xBT/54/1 + 2xBT/55/1	**8102050009**	**810500J**	116	5x13x9.5-180°
TB191, TB231	78-	•			**1730603270**	414	125x13.5x347 125x12.5x285		17306 17309	2x17306 + 2x17309	2xBT/56/1 + 2xBT/57/1	**8103060007**	**810600J**	116	6x15x11.5-180°
	78-		•		**1904903270**	414	150x13x285.94 285x12.5x285		19049 19199	2x19049 + 2x19199	2xSA/10/1 + 2xSA/11/1	**8102060005**		96	6x13.5x12-180°
TBH12, TBH260, TBH280 *(6x4)*	78-80	•			**1904903270**	414	150x13x285.94 285x12.5x285		19049 19199	2x19049 + 2x19199	2xSA/10/1 + 2xSA/11/1	**8102060005**		96	6x13.5x12-180°
	78-80		•		**1965503270**	414	175x14.0x371		19655	4x19655	4xBT/59/1	**8103080005**	**810800J**	84	8x18x15.5-180°
TF12 **TBH12** *(6x4)*		•			**1730603270**	414	125x13.5x347 125x12.5x285		17306 17309	2x17306 + 2x17309	2xBT/56/1 + 2xBT/57/1	**8103060007**	**810600J**	116	6x15x11.5-180°
TF12 **TBH12** *(6x4)* **TRH305, TRH320, TRH350** *(6x4 33t)*			•	**1965709580**	**1965703270**	414	175x13.5x370		19657	4x19657	4xBT/59/6	**8103080005**	**810800J**	72	8x18x15.5-180°

JURID by Honeywell

© JURID / All rights reserved 2005

© JURID / All rights reserved 2005

JURID by Honeywell

Renault Trucks (Renault VI)...

Mascott...

3.5t - 6.5t	99-		•	**2912104530**	290	164.8x20x66.5	**569103J**		29121	4x29121					

Messenger / B

B110.35, B120.55, B55, B60.65	94-	•		**571368J**		166.5x17x62			20706 20947	2x20706 + 2x20947					
B110, B120			•	**B355982NA**	_305										
B110, B120, B70, B80, B90	82-92	•		**571368J**	276	166.5x17x62	**567948J**		20706 20947	2x20706 + 2x20947					
B110, B120, B70, B80, B90 *(FN60)*			•	**B348163 •**	305	305x80									
			•	**B348164 •**	305	305x80									
B110, B120, B70, B80, B90 *(FN40)*			•	**B348169 •**	305	305x80									
			•	**B348170 •**	305	305x80									
B110, B120, B80, B90	92-	•		**2998404611**	276	166.5x17x62	**567954J**		29984	4x29984					
B70	92-	•		**571368J**	276	166.5x17x62	**567954J**		20706 20947	2x20706 + 2x20947					
	03/89-		•	**B355982NA**	305										
	82-03/89		•	**B358945 •**	305	305x70									
	82-03/89		•	**B358946 •**	305	305x70									
B80	82-12/90		•	**B358945 •**	305	305x70									
	82-12/90		•	**B358946 •**	305	305x70									
	91-		•	**B355982NA**	305										
B90	82-86		•	**B355982NA**											
	86-		•	**B355982NA**	305										

Gamme C

210, 230, 260, 280, CBH280, CBH320, CBH340, CBH350, CBH380, CBH385, CLM280, CLM320, CLM340, CLM350, CLM380, CLM385 **290, 300** *(4x4)* **340** *(TI)*	89-		•	**1993509580** **1993509530**	**1993503270** **1993501230** **1993501230**	414	175x18.5x184		19935	8x19935	8xRN/101/1	**8103080005**	**810800J**	64	8x18x15.5-180°
210, 230, 260, 280, CBH280, CBH320, CBH340, CBH350, CBH380, CBH385, CLM280, CLM320, CLM340, CLM350, CLM380, CLM385 **290, 300** *(4x4)* **340** *(TI)*	89-	•		**1993409580** **1993409530**	**1993403270** **1993401230** **1993401230**	414	150x18.5x184		19934	8x19934	8xRN/100/1	**8103080005**	**810800J**	64	8x18x15.5-180°
210, 260, 290, CLR220	07/87-88	•		**1993409580** **1993409530**	**1993403270** **1993401230** **1993401230**	414	150x18.5x184		19934	8x19934	8xRN/100/1	**8103080005**	**810800J**	64	8x18x15.5-180°
	82-06/87	•			**1904903270**	414	150x13x285.94 285x12.5x285		19049 19199	2x19049 + 2x19199	2xSA/10/1 + 2xSA/11/1	**8102060005**		96	6x13.5x12-180°
	82-88		•	**1965709580**	**1965703270**	414	175x13.5x370		19657	4x19657	4xBT/59/6	**8103080005**	**810800J**	72	8x18x15.5-180°
260 *(4x4)*	84-87	•			**1904903270**	414	150x13x285.94 285x12.5x285		19049 19199	2x19049 + 2x19199	2xSA/10/1 + 2xSA/11/1	**8102060005**		96	6x13.5x12-180°
	87-	•		**1993409580** **1993409530**	**1993403270** **1993401230** **1993401230**	414	150x18.5x184		19934	8x19934	8xRN/100/1	**8103080005**	**810800J**	64	8x18x15.5-180°
	84-87		•		**1904903270**	414	150x13x285.94 285x12.5x285		19049 19199	2x19049 + 2x19199	2xSA/10/1 + 2xSA/11/1	**8102060005**		96	6x13.5x12-180°
	87-		•		**1904903270**	414	150x13x285.94 285x12.5x285		19049 19199	2x19049 + 2x19199	2xSA/10/1 + 2xSA/11/1	**8102060005**		96	6x13.5x12-180°

© JURID / All rights reserved 2005

© JURID / All rights reserved 2005

Renault Trucks (Renault VI)...

...

Gamme C...

290, 300 *(4x4)*	-88	•	**1993409580** **1993409530**	**1993403270** **1993401230** **1993401230**	414	150x18.5x184			19934	8x19934	8xRN/100/1	**8103080005**	**810800J**	64	8x18x15.5-180°
	-88	•	**1993409580** **1993409530**	**1993403270** **1993401230** **1993401230**	414	150x18.5x184			19934	8x19934	8xRN/100/1	**8103080005**	**810800J**	64	8x18x15.5-180°
CBH280, CBH340, CLM280, CLM340	86-88	•		**1904903270**	414	150x13x285.94 285x12.5x285			19049 19199	2x19049 + 2x19199	2xSA/10/1 + 2xSA/11/1	**8102060005**		96	6x13.5x12-180°
	86-88	•	**1965709580**	**1965703270**	414	175x13.5x370			19657	4x19657	4xBT/59/6	**8103080005**	**810800J**	72	8x18x15.5-180°
CBH320, CBH385 *(6x4)*		• •	**1993509580** **1993509530**	**1993503270** **1993501230** **1993501230**	414	175x18.5x184			19935	8x19935	8xRN/101/1	**8103080005**	**810800J**	64	8x18x15.5-180°
CCH330, CLR200, CLR230	88-	•	**1993409580** **1993409530**	**1993403270** **1993401230** **1993401230**	414	150x18.5x184			19934	8x19934	8xRN/100/1	**8103080005**	**810800J**	64	8x18x15.5-180°
	88-	•	**1993509580** **1993509530**	**1993503270** **1993501230** **1993501230**	414	175x18.5x184			19935	8x19935	8xRN/101/1	**8103080005**	**810800J**	64	8x18x15.5-180°

Gamme J

E11, E9 **P11** *(Garbage Truck)*	76-83	•		**1758203320**	356	100x10.0x349 100x10.0x322			17582 17805	2x17582 + 2x17805	2xSA/24/1 + 2xBT/53/1	**8102050009**	**810500J**	64	5x13x9.5-180°
	76-83	•		**1758203320**	356	100x10.0x349 100x10.0x322			17582 17805	2x17582 + 2x17805	2xSA/24/1 + 2xBT/53/1	**8102050009**	**810500J**	64	5x13x9.5-180°
E13, P13, P14, P19 *(A Garbage Truck,A Tanker, B Garbage Truck,B Tanker, C Garbage Truck,C Tanker)* **R19, R21** *(A,B,C,T)*	76-83	•		**1780401820**	394	127x12.7x354			17804	4x17804	4xDO/80/2	**8102060005**		64	6x13.5x12-180°
	76-83	•		**1962203320**	394	152x12.7x354			19622	4x19622	4xLH/82/2	**8102060004**		64	6x13.5x11-180°
E15	76-	•		**1904903270**	414	150x13x285.94 285x12.5x285			19049 19199	2x19049 + 2x19199	2xSA/10/1 + 2xSA/11/1	**8102060005**		96	6x13.5x12-180°
K60, K65, K75 *(A Garbage Truck,B Garbage Truck)*	75-	•		**1782903320** **1782909530**	310	100x9.5x245 100x9.5x209			17829 17830	2x17829 + 2x17830	2xBT/76/1 + 2xSA/25/1	**8102050009**	**810500J**	56	5x13x9.5-180°
	75-	•		**1783103320**	310	125x10.0x209 125x10.0x245			17831 17832	2x17831 + 2x17832	2xSA/27/1 + 2xSA/26/1	**8102050009**	**810500J**	64	5x13x9.5-180°
N60, N75, N80, N85, N90, N95 *(A)*	76-83	•		**1782703320** **1782709530**	325	120x12.5x251 120x12.5x209			17827 17828	2x17827 + 2x17828	2xSA/28/1 + 2xSA/29/1	**8102050009**	**810500J**	60	5x13x9.5-180°
N60, N75, N80, N85, N95 *(A)*	76-83	•		**1962003320**	325	150x12.5x209.4 150x12.5x251.3			19620 19621	2x19620 + 2x19621	2xSA/30/1 + 2xSA/31/1	**8102050009**	**810500J**	64	5x13x9.5-180°
X21 *(A,B,C,T)*	79-83	•		**1780401820**	394	127x12.7x354			17804	4x17804	4xDO/80/2	**8102060005**		64	6x13.5x12-180°
	79-83	•		**1962203320**	394	152x12.7x354			19622	4x19622	4xLH/82/2	**8102060004**		64	6x13.5x11-180°

Magnum / AE

380 *(4x2,6x2,6x4)* **385** *(TI 4x2,TI 6x2,TI 6x4)*	93-95	•		**2903005391** **2903009560**		438	250x28x118	**567953J**	**587013J**	29030	4x29030					
380, 390, 430, 470, 500, 520, 560 *(4x2,6x2,6x4)* **385, 420** *(TI 4x2,TI 6x2,TI 6x4)*	96-	•		**2909005391** **2909009560**		438	249x28x114	**567953J**	**587026J**	29090	4x29090					
380, 500 **385** *(TI)*	09/92-12/92	•		**2904303382** **2904309560**	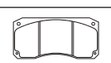	440	204x24x96	**567952J**	**587012J**	29043	4x29043					
385 *(TI 6x2)* **380, 500** *(6x2)*	-12/92	•	**1903209580**	**1903204040**		420	180x17.5/10.5x204			19032	8x19032	8xBC/98/1	**8162080001**	**810800J**	80	8x15x15.5-180°
	-12/92	•	**1909409580**	**1909404040**		420	200x17.5/10.5x204			19094	8x19094	8xBC/97/1	**8162080001**	**810800J**	80	8x15x15.5-180°

JURID by Honeywell

© JURID / All rights reserved 2005

© JURID / All rights reserved 2005

JURID by Honeywell

Renault Trucks (Renault VI)...

...

Gamme C...

380, 500(6x4) **385**(TI 6x4)	-12/92	•	**1993409580** **1993409530**	**1993403270** **1993401230** **1993401230**		414	150x18.5x184			19934	8x19934	8xRN/100/1	**8103080005**	**810800J**	64	8x18x15.5-180°
385(TI,TI 6x2,TI 6x4) **380, 500**(6x2,6x4)	-12/92	•	**1993509580** **1993509530**	**1993503270** **1993501230** **1993501230**		414	175x18.5x184			19935	8x19935	8xRN/101/1	**8103080005**	**810800J**	64	8x18x15.5-180°
380, 500(4x2,6x2,6x4)	-09/92	•		**2904303381** **2904309560**		440	204x24x96	**567952J**		29043	4x29043					
385(TI 4x2,TI 6x2,TI 6x4)	02/92-10/96	•		**2904303381** **2904309560**		440	204x24x96	**567952J**		29043	4x29043					
390, 430, 470, 520, 560(6x2) **385, 420**(TI 6x2)	96-	•	**1903209580**	**1903204040**		420	180x17.5/10.5x204			19032	8x19032	8xBC/98/1	**8162080001**	**810800J**	80	8x15x15.5-180°
	96-	•	**1909409580**	**1909404040**		420	200x17.5/10.5x204			19094	8x19094	8xBC/97/1	**8162080001**	**810800J**	80	8x15x15.5-180°
385, 420(TI,TI 6x2) **390, 430, 470, 520, 560**(6x2)	96-	•	**1918709550**	**1918703270** **1918701230**		414	220x18.5x183.7			19187	8x19187	8xRN/104/1	**8103080005**	**810800J**	128	8x18x15.5-180°
385, 420(TI 6x4) **390, 430, 470, 520, 560**(6x4)	96-	•	**1993409580** **1993409530**	**1993403270** **1993401230** **1993401230**		414	150x18.5x184			19934	8x19934	8xRN/100/1	**8103080005**	**810800J**	64	8x18x15.5-180°
	96-	•	**1993509580** **1993509530**	**1993503270** **1993501230** **1993501230**		414	175x18.5x184			19935	8x19935	8xRN/101/1	**8103080005**	**810800J**	64	8x18x15.5-180°
500(4x2,6x2,6x4) **520**(14T,18T,19T,22T) **420**(18T,19T,26T,TI) **385**(TI)	96-	•		**2903005392** **2903009560**		438	250x28x118	**567953J**	**587026J**	29030	4x29030					
520(6x2) **385, 420**(TI 6x2)	93-95	•	**1903209580**	**1903204040**		420	180x17.5/10.5x204			19032	8x19032	8xBC/98/1	**8162080001**	**810800J**	80	8x15x15.5-180°
	93-95	•	**1909409580**	**1909404040**		420	200x17.5/10.5x204			19094	8x19094	8xBC/97/1	**8162080001**	**810800J**	80	8x15x15.5-180°
385, 420(TI,TI 6x2) **520**(6x2)	93-95	•	**1918709550**	**1918703270** **1918701230**		414	220x18.5x183.7			19187	8x19187	8xRN/104/1	**8103080005**	**810800J**	128	8x18x15.5-180°
385, 420(TI 6x4) **520**(6x4)	93-95	•	**1993409580** **1993409530**	**1993403270** **1993401230** **1993401230**		414	150x18.5x184			19934	8x19934	8xRN/100/1	**8103080005**	**810800J**	64	8x18x15.5-180°
	93-95	•	**1993509580** **1993509530**	**1993503270** **1993501230** **1993501230**		414	175x18.5x184			19935	8x19935	8xRN/101/1	**8103080005**	**810800J**	64	8x18x15.5-180°
390(18T,19T,26T)	09/96-	•		**2903005392** **2903009560**		438	250x28x118	**567953J**	**587026J**	29030	4x29030					
390(4x2,6x2,6x4)	90-93	•		**2904303381** **2904309560**		440	204x24x96	**567952J**		29043	4x29043					
420(TI 4x2,TI 6x2,TI 6x4) **520**(4x2,6x2,6x4)	93-96	•		**2903005391** **2903009560**		438	250x28x118	**567953J**	**587013J**	29030	4x29030					
430, 470(26T)	92-96	•		**2903005392** **2903009560**		438	250x28x118	**567953J**	**587026J**	29030	4x29030					
500(4x2,6x2,6x4)	92-95	•		**2903005391** **2903009560**		438	250x28x118	**567953J**	**587013J**	29030	4x29030					
560(4x2,6x2,6x4)	92-95	•		**2903005392** **2903009560**		438	250x28x118	**567953J**	**587026J**	29030	4x29030					
560(18T,19T,26T)	96-06/00	•		**2903005392** **2903009560**		438	250x28x118	**567953J**	**587026J**	29030	4x29030					

© JURID / All rights reserved 2005

© JURID / All rights reserved 2005

Renault Trucks (Renault VI)...

...

Magnum E. Tech

400, 440, 480 *(18T,24T,26T)*	05/00-	•		**2913109560**		434	249.63x30x118.2	**569113J**			29131	4x29131							
	05/00-		•	**2913109560**		434	249.63x30x118.2	**569114J**			29131	4x29131							

Major / R

R310, R330, R340, R350, R365, R370, R380, R385, R390	84-89	•		**1993409580** **1993409530**	**1993403270** **1993401230** **1993401230**		414	150x18.5x184			19934	8x19934	8xRN/100/1	**8103080005**	**810800J**	64	8x18x15.5-180°		
	84-89		•	**1993509580** **1993509530**	**1993503270** **1993501230** **1993501230**		414	175x18.5x184			19935	8x19935	8xRN/101/1	**8103080005**	**810800J**	64	8x18x15.5-180°		
R310, R340, R365, R370, R390, R420 *(26T 6x4)*	84-88	•		**1993409580** **1993409530**	**1993403270** **1993401230** **1993401230**		414	150x18.5x184			19934	8x19934	8xRN/100/1	**8103080005**	**810800J**	64	8x18x15.5-180°		
R310, R340, R365, R370, R390, R420 *(33T 6x4,6x2)*	84-	•		**1993409580** **1993409530**	**1993403270** **1993401230** **1993401230**		414	150x18.5x184			19934	8x19934	8xRN/100/1	**8103080005**	**810800J**	64	8x18x15.5-180°		
R310, R340, R365, R370, R390, R420 *(26T 6x4)*	89-	•		**1993409580** **1993409530**	**1993403270** **1993401230** **1993401230**		414	150x18.5x184			19934	8x19934	8xRN/100/1	**8103080005**	**810800J**	64	8x18x15.5-180°		
	84-88		•	**1993409580** **1993409530**	**1993403270** **1993401230** **1993401230**		414	150x18.5x184			19934	8x19934	8xRN/100/1	**8103080005**	**810800J**	64	8x18x15.5-180°		
R310, R340, R365, R370, R390, R420 *(6x2)*	84-	•		**1903209580**	**1903204040**		420	180x17.5/10.5x204			19032	8x19032	8xBC/98/1	**8162080001**	**810800J**	80	8x15x15.5-180°		
	84-		•	**1909409580**	**1909404040**		420	200x17.5/10.5x204			19094	8x19094	8xBC/97/1	**8162080001**	**810800J**	80	8x15x15.5-180°		
R310, R340, R365, R370, R390, R420 *(33T 6x4,6x2)*	84-		•	**1993509580** **1993509530**	**1993503270** **1993501230** **1993501230**		414	175x18.5x184			19935	8x19935	8xRN/101/1	**8103080005**	**810800J**	64	8x18x15.5-180°		
R310, R360, R370 *(26T 6x4)*	-84	•	•		**1904903270**		414	150x13x285.94 285x12.5x285			19049 19199	2x19049 + 2x19199	2xSA/10/1 + 2xSA/11/1	**8102060005**		96	6x13.5x12-180°		
R360, R370 *(33T 6x4)* **R310** *(33T 6x4)*	-84	•			**1904903270**		414	150x13x285.94 285x12.5x285			19049 19199	2x19049 + 2x19199	2xSA/10/1 + 2xSA/11/1	**8102060005**		96	6x13.5x12-180°		
R310, R360, R370 *(33T 6x4)*	-84		•	**1965709580**	**1965703270**		414	175x13.5x370			19657	4x19657	4xBT/59/6	**8103080005**	**810800J**	72	8x18x15.5-180°		
R310, R370, R390 *(26T 6x4)*	89-		•	**1993409580** **1993409530**	**1993403270** **1993401230** **1993401230**		414	150x18.5x184			19934	8x19934	8xRN/100/1	**8103080005**	**810800J**	64	8x18x15.5-180°		
R350, R380 **R340, R385** *(TI)*	90-92	•		**1993409580** **1993409530**	**1993403270** **1993401230** **1993401230**		414	150x18.5x184			19934	8x19934	8xRN/100/1	**8103080005**	**810800J**	64	8x18x15.5-180°		
	90-92	•			**2904303381** **2904309560**		440	204x24x96	**567952J**	**587012J**	29043	4x29043							
	92-93	•		**1993409580** **1993409530**	**1993403270** **1993401230** **1993401230**		414	150x18.5x184			19934	8x19934	8xRN/100/1	**8103080005**	**810800J**	64	8x18x15.5-180°		
	92-93	•			**2904303382** **2904309560**		440	204x24x96	**567952J**	**587012J**	29043	4x29043							
	90-92		•	**1993409580** **1993409530**	**1993403270** **1993401230** **1993401230**		414	150x18.5x184			19934	8x19934	8xRN/100/1	**8103080005**	**810800J**	64	8x18x15.5-180°		
	92-93		•	**1993409580** **1993409530**	**1993403270** **1993401230** **1993401230**		414	150x18.5x184			19934	8x19934	8xRN/100/1	**8103080005**	**810800J**	64	8x18x15.5-180°		

© JURID / All rights reserved 2005

© JURID / All rights reserved 2005

Renault Trucks (Renault VI)...

...

Major / R...

R350 **R385***(TI)* **R340, R420, R429***(TI)*	93-	•		**2903005391** **2903009560**		438	250x28x118	**567953J**		**587013J**	29030	4x29030						
R340, R365, R420*(26T 6x4)*	89-		•	**1993509580** **1993509530**	**1993503270** **1993501230** **1993501230**		414	175x18.5x184				19935	8x19935	8xRN/101/1	**8103080005**	**810800J**	64	8x18x15.5-180°
R340, R385*(TI 6x2)*	09/92-10/93	•		**1993509580** **1993509530**	**1993503270** **1993501230** **1993501230**		414	175x18.5x184				19935	8x19935	8xRN/101/1	**8103080005**	**810800J**	64	8x18x15.5-180°
	09/92-10/93	•		**2904303382** **2904309560**		440	204x24x96	**567952J**		**587012J**	29043	4x29043						
	11/93-	•		**1993509580** **1993509530**	**1993503270** **1993501230** **1993501230**		414	175x18.5x184				19935	8x19935	8xRN/101/1	**8103080005**	**810800J**	64	8x18x15.5-180°
	11/93-	•		**2903005391** **2903009560**	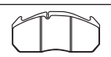	438	250x28x118	**567953J**		**587013J**	29030	4x29030						
	90-09/92	•		**1993509580** **1993509530**	**1993503270** **1993501230** **1993501230**		414	175x18.5x184				19935	8x19935	8xRN/101/1	**8103080005**	**810800J**	64	8x18x15.5-180°
	90-09/92	•		**2904303381** **2904309560**	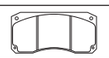	440	204x24x96	**567952J**		**587012J**	29043	4x29043						
	09/92-10/93		•	**1903209580**	**1903204040**		420	180x17.5/10.5x204				19032	8x19032	8xBC/98/1	**8162080001**	**810800J**	80	8x15x15.5-180°
	09/92-10/93		•	**1909409580**	**1909404040**		420	200x17.5/10.5x204				19094	8x19094	8xBC/97/1	**8162080001**	**810800J**	80	8x15x15.5-180°
	09/92-10/93	•		**1993509580** **1993509530**	**1993503270** **1993501230** **1993501230**		414	175x18.5x184				19935	8x19935	8xRN/101/1	**8103080005**	**810800J**	64	8x18x15.5-180°
	11/93-		•	**1903209580**	**1903204040**		420	180x17.5/10.5x204				19032	8x19032	8xBC/98/1	**8162080001**	**810800J**	80	8x15x15.5-180°
	11/93-		•	**1909409580**	**1909404040**		420	200x17.5/10.5x204				19094	8x19094	8xBC/97/1	**8162080001**	**810800J**	80	8x15x15.5-180°
	11/93-	•		**1993509580** **1993509530**	**1993503270** **1993501230** **1993501230**		414	175x18.5x184				19935	8x19935	8xRN/101/1	**8103080005**	**810800J**	64	8x18x15.5-180°
	90-09/92		•	**1903209580**	**1903204040**		420	180x17.5/10.5x204				19032	8x19032	8xBC/98/1	**8162080001**	**810800J**	80	8x15x15.5-180°
	90-09/92		•	**1909409580**	**1909404040**		420	200x17.5/10.5x204				19094	8x19094	8xBC/97/1	**8162080001**	**810800J**	80	8x15x15.5-180°
	90-09/92	•		**1993509580** **1993509530**	**1993503270** **1993501230** **1993501230**		414	175x18.5x184				19935	8x19935	8xRN/101/1	**8103080005**	**810800J**	64	8x18x15.5-180°
R340, R385*(TI)*	93-	•		**1993409580** **1993409530**	**1993403270** **1993401230** **1993401230**		414	150x18.5x184				19934	8x19934	8xRN/100/1	**8103080005**	**810800J**	64	8x18x15.5-180°
R380*(6x4)*	90-		•	**1993409580** **1993409530**	**1993403270** **1993401230** **1993401230**		414	150x18.5x184				19934	8x19934	8xRN/100/1	**8103080005**	**810800J**	64	8x18x15.5-180°
	90-		•	**1993509580** **1993509530**	**1993503270** **1993501230** **1993501230**		414	175x18.5x184				19935	8x19935	8xRN/101/1	**8103080005**	**810800J**	64	8x18x15.5-180°

© JURID / All rights reserved 2005

© JURID / All rights reserved 2005

Renault Trucks (Renault VI)...

...

Major / R...

R385*(TI 6x4)*	90-93	•	**1993409580** **1993409530**	**1993403270** **1993401230** **1993401230**		414	150x18.5x184			19934	8x19934	8xRN/100/1	**8103080005**	**810800J**	64	8x18x15.5-180°
	94-	•	**1993509580** **1993509530**	**1993503270** **1993501230** **1993501230**		414	175x18.5x184			19935	8x19935	8xRN/101/1	**8103080005**	**810800J**	64	8x18x15.5-180°
	90-93	•	**1993509580** **1993509530**	**1993503270** **1993501230** **1993501230**		414	175x18.5x184			19935	8x19935	8xRN/101/1	**8103080005**	**810800J**	64	8x18x15.5-180°
	94-	•	**1993509580** **1993509530**	**1993503270** **1993501230** **1993501230**		414	175x18.5x184			19935	8x19935	8xRN/101/1	**8103080005**	**810800J**	64	8x18x15.5-180°
R420*(Box Truck,TI)*	84-92	•	**1993409580** **1993409530**	**1993403270** **1993401230** **1993401230**		414	150x18.5x184			19934	8x19934	8xRN/100/1	**8103080005**	**810800J**	64	8x18x15.5-180°
R420*(Tractor)*	89-09/92	•		**2904303381** **2904309560**	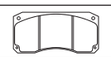	440	204x24x96	**567952J**		**587012J**	29043	4x29043					
R420*(TI)*	93-	•	**1993509580** **1993509530**	**1993503270** **1993501230** **1993501230**		414	175x18.5x184			19935	8x19935	8xRN/101/1	**8103080005**	**810800J**	64	8x18x15.5-180°
R420*(Box Truck,TI)*	84-92	•	**1993509580** **1993509530**	**1993503270** **1993501230** **1993501230**		414	175x18.5x184			19935	8x19935	8xRN/101/1	**8103080005**	**810800J**	64	8x18x15.5-180°
R420*(Tractor)*	89-92	•	**1993509580** **1993509530**	**1993503270** **1993501230** **1993501230**		414	175x18.5x184			19935	8x19935	8xRN/101/1	**8103080005**	**810800J**	64	8x18x15.5-180°
R420*(TI)*	93-	•	**1993509580** **1993509530**	**1993503270** **1993501230** **1993501230**		414	175x18.5x184			19935	8x19935	8xRN/101/1	**8103080005**	**810800J**	64	8x18x15.5-180°
R420, R429*(Tractor)*	09/92-12/92	•		**2904303382** **2904309560**	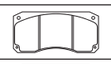	440	204x24x96	**567952J**		**587012J**	29043	4x29043					
R429*(Tractor)*	89-09/92	•		**2904303382** **2904309560**	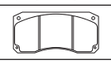	440	204x24x96	**567952J**		**587012J**	29043	4x29043					

Manager / G

G170.13, G170.15	83-84	•		**1730603270**		414	125x13.5x347 125x12.5x285			17306 17309	2x17306 + 2x17309	2xBT/56/1 + 2xBT/57/1	**8103060007**	**810600J**	116	6x15x11.5-180°
G260, G290 *(11t,15t)*	83-84	•	**1991909580**	**1991903270**		414	150x13.5x370			19919	4x19919	4xBT/84/1	**8103080005**	**810800J**	72	8x18x15.5-180°
G170.16, G230*(11t,17t)* **G210***(11t,17t,Garbage Truck 19t)* **G210.19, G230.19** *(Garbage Truck 19t)*	83-86	•		**1904903270**		414	150x13x285.94 285x12.5x285			19049 19199	2x19049 + 2x19199	2xSA/10/1 + 2xSA/11/1	**8102060005**		96	6x13.5x12-180°
G170.16, G210, G230*(11t,17t)*	83-86	•	**1991909580**	**1991903270**		414	150x13.5x370			19919	4x19919	4xBT/84/1	**8103080005**	**810800J**	72	8x18x15.5-180°
G170	88-	•	**1993409580** **1993409530**	**1993403270** **1993401230** **1993401230**		414	150x18.5x184			19934	8x19934	8xRN/100/1	**8103080005**	**810800J**	64	8x18x15.5-180°
G260, G290*(11t,17t)* **G170, G210.15, G210.17, G230.15, G230.17, G230** *(SP Turbo 15t,SP Turbo 17t)*	86-88	•	**1993409580** **1993409530**	**1993403270** **1993401230** **1993401230**		414	150x18.5x184			19934	8x19934	8xRN/100/1	**8103080005**	**810800J**	64	8x18x15.5-180°
	86-88	•	**1993409580** **1993409530**	**1993403270** **1993401230** **1993401230**		414	150x18.5x184			19934	8x19934	8xRN/100/1	**8103080005**	**810800J**	64	8x18x15.5-180°

© JURID / All rights reserved 2005

© JURID / All rights reserved 2005

Renault Trucks (Renault VI)...

...

Manager / G...

G170 **G210, G220.17, G230** *(Garbage Truck 15t, Garbage Truck 19t)*	88-	•	**1993509580** **1993509530**	**1993503270** **1993501230** **1993501230**		414	175x18.5x184			19935	8x19935	8xRN/101/1	**8103080005**	**810800J**	64	8x18x15.5-180°
G200, G210 **G220.19***(Garbage Truck)*	90-	•	**1993509580** **1993509530**	**1993503270** **1993501230** **1993501230**		414	175x18.5x184			19935	8x19935	8xRN/101/1	**8103080005**	**810800J**	64	8x18x15.5-180°
	90-	•	**1993509580** **1993509530**	**1993503270** **1993501230** **1993501230**		414	175x18.5x184			19935	8x19935	8xRN/101/1	**8103080005**	**810800J**	64	8x18x15.5-180°
G210.19, G210, G230.19 *(Garbage Truck 19t)* **G260.19, G260, G290.19** *(A Garbage Truck, GT Garbage Truck)*	83-86	•	**1965709580**	**1965703270**		414	175x13.5x370			19657	4x19657	4xBT/59/6	**8103080005**	**810800J**	72	8x18x15.5-180°
G210, G220.17, G230 *(Garbage Truck 15t, Garbage Truck 19t)*	86-	•	**1993409580** **1993409530**	**1993403270** **1993401230** **1993401230**		414	150x18.5x184			19934	8x19934	8xRN/100/1	**8103080005**	**810800J**	64	8x18x15.5-180°
	86-88	•	**1993509580** **1993509530**	**1993503270** **1993501230** **1993501230**		414	175x18.5x184			19935	8x19935	8xRN/101/1	**8103080005**	**810800J**	64	8x18x15.5-180°
G270, G280, G300, G330 **G230***(TI)*	90-92	•	**1993409580** **1993409530**	**1993403270** **1993401230** **1993401230**		414	150x18.5x184			19934	8x19934	8xRN/100/1	**8103080005**	**810800J**	64	8x18x15.5-180°
G270 **G340***(TI,TI 6x2)* **G280, G300, G330***(6x2)* **G230***(TI)*	90-92	•		**2904303381** **2904309560**	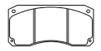	440	204x24x96	**567952J**		29043	4x29043					
G270, G280, G300, G330 **G230, G340***(TI)*	93-	•	**1993409580** **1993409530**	**1993403270** **1993401230** **1993401230**		414	150x18.5x184			19934	8x19934	8xRN/100/1	**8103080005**	**810800J**	64	8x18x15.5-180°
G270 **G340***(TI,TI 6x2)* **G280, G300, G330***(6x2)* **G230***(TI)*	93-	•		**2903005392** **2903009560**		438	250x28x118	**567953J**	**587026J**	29030	4x29030					
G270, G280, G300, G330 **G230, G340***(TI)*	93-	•	**1993409580** **1993409530**	**1993403270** **1993401230** **1993401230**		414	150x18.5x184			19934	8x19934	8xRN/100/1	**8103080005**	**810800J**	64	8x18x15.5-180°
G260.11, G260.17, G260.19, G290.11, G290.17, G290.19 *(GT Garbage Truck, Turbo Garbage Truck)*	89-	•	**1993409580** **1993409530**	**1993403270** **1993401230** **1993401230**		414	150x18.5x184			19934	8x19934	8xRN/100/1	**8103080005**	**810800J**	64	8x18x15.5-180°
	89-	•	**1993509580** **1993509530**	**1993503270** **1993501230** **1993501230**		414	175x18.5x184			19935	8x19935	8xRN/101/1	**8103080005**	**810800J**	64	8x18x15.5-180°
G260.19, G260, G290.19 *(A Garbage Truck, GT Garbage Truck)*	83-86	•		**1730603270**		414	125x13.5x347 125x12.5x285			17306 17309	2x17306 + 2x17309	2xBT/56/1 + 2xBT/57/1	**8103060007**	**810600J**	116	6x15x11.5-180°
G260, G290*(11t,17t)*	84-86	•		**1730603270**		414	125x13.5x347 125x12.5x285			17306 17309	2x17306 + 2x17309	2xBT/56/1 + 2xBT/57/1	**8103060007**	**810600J**	116	6x15x11.5-180°
	84-86	•	**1991909580**	**1991903270**		414	150x13.5x370			19919	4x19919	4xBT/84/1	**8103080005**	**810800J**	72	8x18x15.5-180°

JURID by Honeywell

© JURID / All rights reserved 2005

© JURID / All rights reserved 2005

JURID by Honeywell

			STOCK	STOCK	⌀ mm				WVA	BFMC	JURID	SUPASET	#	

Renault Trucks (Renault VI)...

...

Manager / G...

G260, G290, G320 *(6x2)*	07/87-	•	**1993409580** **1993409530**	**1993403270** **1993401230** **1993401230**		414	150x18.5x184			19934	8x19934	8xRN/100/1	**8103080005**	**810800J**	64	8x18x15.5-180°
	07/87-	•	**1903209580**	**1903204040**		420	180x17.5/10.5x204			19032	8x19032	8xBC/98/1	**8162080001**	**810800J**	80	8x15x15.5-180°
	07/87-	•	**1909409580**	**1909404040**		420	200x17.5/10.5x204			19094	8x19094	8xBC/97/1	**8162080001**	**810800J**	80	8x15x15.5-180°
	07/87-	•	**1993509580** **1993509530**	**1993503270** **1993501230** **1993501230**		414	175x18.5x184			19935	8x19935	8xRN/101/1	**8103080005**	**810800J**	64	8x18x15.5-180°
G280, G300, G320, G330 **G340** *(TI)*	83-90	•	**1993409580** **1993409530**	**1993403270** **1993401230** **1993401230**		414	150x18.5x184			19934	8x19934	8xRN/100/1	**8103080005**	**810800J**	64	8x18x15.5-180°
	83-90	•	**1993509580** **1993509530**	**1993503270** **1993501230** **1993501230**		414	175x18.5x184			19935	8x19935	8xRN/101/1	**8103080005**	**810800J**	64	8x18x15.5-180°
G340 *(TI 6x2)* **G280, G300, G330** *(6x2)*	93-	• •	**1993509580** **1993509530**	**1993503270** **1993501230** **1993501230**		414	175x18.5x184			19935	8x19935	8xRN/101/1	**8103080005**	**810800J**	64	8x18x15.5-180°
	90-92	•	**1993509580** **1993509530**	**1993503270** **1993501230** **1993501230**		414	175x18.5x184			19935	8x19935	8xRN/101/1	**8103080005**	**810800J**	64	8x18x15.5-180°
G280, G300, G330 *(6x2 Option)* **G340** *(TI 6x2 Option)*	93-	•		**2909005390** **2909009560**		438	248x28x114	**567953J**		29090	4x29090					
G340 *(TI 6x2)* **G280, G300, G330** *(6x2)*	90-92	•	**1903209580**	**1903204040**		420	180x17.5/10.5x204			19032	8x19032	8xBC/98/1	**8162080001**	**810800J**	80	8x15x15.5-180°
	90-92	•	**1909409580**	**1909404040**		420	200x17.5/10.5x204			19094	8x19094	8xBC/97/1	**8162080001**	**810800J**	80	8x15x15.5-180°
	90-92	•	**1993509580** **1993509530**	**1993503270** **1993501230** **1993501230**		414	175x18.5x184			19935	8x19935	8xRN/101/1	**8103080005**	**810800J**	64	8x18x15.5-180°
	93-	•	**1903209580**	**1903204040**		420	180x17.5/10.5x204			19032	8x19032	8xBC/98/1	**8162080001**	**810800J**	80	8x15x15.5-180°
	93-	•	**1909409580**	**1909404040**		420	200x17.5/10.5x204			19094	8x19094	8xBC/97/1	**8162080001**	**810800J**	80	8x15x15.5-180°
G340 *(TI)*	90-92	•	**1993409580** **1993409530**	**1993403270** **1993401230** **1993401230**		414	150x18.5x184			19934	8x19934	8xRN/100/1	**8103080005**	**810800J**	64	8x18x15.5-180°

Maxter / G

G235, G270, G280, G300 **G230, G340** *(TI)*	90-	•	**1993509580** **1993509530**	**1993503270** **1993501230** **1993501230**		414	175x18.5x184			19935	8x19935	8xRN/101/1	**8103080005**	**810800J**	64	8x18x15.5-180°
G230, G340 *(TI Option)* **G235, G270, G280, G300** *(Option)*	90-	•		**2901303371** **2901309561**		354	180x20.5x86	**567949J**		29013	4x29013					
	90-	•		**2901303372**		354	180x20.5x86	**567949J**	**587014J**	29013	4x29013					
G235, G270, G280, G300 **G230, G340** *(TI)*	90-	•	**1993509580** **1993509530**	**1993503270** **1993501230** **1993501230**		414	175x18.5x184			19935	8x19935	8xRN/101/1	**8103080005**	**810800J**	64	8x18x15.5-180°

Midliner / M

M120, M130, M140, M150, M160, M180, M200, M210, M230 *(12,13)*	89-94	•		**2901303371** **2901309561**		354	180x20.5x86	**567949J**		29013	4x29013					

© JURID / All rights reserved 2005

© JURID / All rights reserved 2005

Renault Trucks (Renault VI)...

...

Midliner / M...

M140, M150, M160, M180, M200, M210, M230 *(12,12 (P941),13,13 (P941))* **M120** *(12,12(P941),13,13 (P941))*	89-94	•		**1925503270**		360	170x12.8/16.8/15.4x247 170x12.8/16.8/10.8x334			19255 19259	2x19255 + 2x19259	2xRN/102/1 + 2xRN/103/1	**8102050007**	**810500J**	80	5x12x11-180°
M120, M150, M180, M200, M210, M230, M250 *(12,13)*	98-	•		**2910009560**		380	214x25x112	**567958J**		29100	4x29100					
M150, M160, M180, M200, M210, M230, M250 *(14,15,16)*	89-	•	**1993409580** **1993409530**	**1993403270** **1993401230** **1993401230**		414	150x18.5x184			19934	8x19934	8xRN/100/1	**8103080005**	**810800J**	64	8x18x15.5-180°
	89-	•	**1993409580** **1993409530**	**1993403270** **1993401230** **1993401230**		414	150x18.5x184			19934	8x19934	8xRN/100/1	**8103080005**	**810800J**	64	8x18x15.5-180°
	89-	•	**1993509580** **1993509530**	**1993503270** **1993501230** **1993501230**		414	175x18.5x184			19935	8x19935	8xRN/101/1	**8103080005**	**810800J**	64	8x18x15.5-180°
M150, M180, M210, M230, M250 *(12,13)*	95-97	•		**2901303372**		354	180x20.5x86	**567949J**	**587014J**	29013	4x29013					
M150, M180, M210, M230, M250 *(12,12 (P941),13,13 (P941))*	95-	•		**1925503270**		360	170x12.8/16.8/15.4x247 170x12.8/16.8/10.8x334			19255 19259	2x19255 + 2x19259	2xRN/102/1 + 2xRN/103/1	**8102050007**	**810500J**	80	5x12x11-180°

Midliner / S

S100.06, S100.07, S100.08, S110.06, S110.07, S110.08	86-	•		**1782903320** **1782909530**		310	100x9.5x245 100x9.5x209			17829 17830	2x17829 + 2x17830	2xBT/76/1 + 2xSA/25/1	**8102050009**	**810500J**	56	5x13x9.5-180°
	86-	•		**1783103320**		310	125x10.0x209 125x10.0x245			17831 17832	2x17831 + 2x17832	2xSA/27/1 + 2xSA/26/1	**8102050009**	**810500J**	64	5x13x9.5-180°
S130.06, S130.08, S130.09 *(A,B,R)* **S150.08, S150.09** *(TI A,TI R)* **S100.09** *(Garbage Truck,Tanker,Turbo)*	87-	•		**1782703320** **1782709530**		325	120x12.5x251 120x12.5x209			17827 17828	2x17827 + 2x17828	2xSA/28/1 + 2xSA/29/1	**8102050009**	**810500J**	60	5x13x9.5-180°
	87-	•		**1962003320**		325	150x12.5x209.4 150x12.5x251.3			19620 19621	2x19620 + 2x19621	2xSA/30/1 + 2xSA/31/1	**8102050009**	**810500J**	64	5x13x9.5-180°
S120.06, S120.07, S120.08 **S120, S150.07, S150.08** *(A)* **S135.07, S135.08, S140.08** *(A,B,BR)*	95-	•		**2906503341** **2906509560**		304	175x22x85.5	**567955J**	**587016J**	29065	4x29065					
S120.06, S120.07, S120.08, S160.07, S160.08	90-94	•		**2906503341** **2906509560**		354	175x22x85.5	**567949J**	**587016J**	29065	4x29065					
S120, S150.07, S150.08, S180.07, S180.08 *(A)* **S135.07, S135.08, S140.08** *(A,B,BR)*	90-	•		**1783203270**		310	125x12.1x243			17832	4x17832	4xSA/26/1	**8102050009**	**810500J**	72	5x13x9.5-180°
S120.09 **S120, S135.09, S140.09, S150.09, S150.10** *(B)*	95-	•		**2906703341** **2906709560**		304	175.5x22x78	**567955J**	**587016J**	29067	4x29067					
S120.09, S160.09	90-94	•		**2906703341** **2906709560**		354	175.5x22x78	**567949J**	**587016J**	29067	4x29067					
S120, S135.09, S140.09, S150.09, S150.10, S180.09, S180.10 *(B)*	90-	•		**249150136327**		325	150x13.6x249									
S12, S13	87-91	•		**2901303371** **2901309561**		354	180x20.5x86	**567949J**	**587014J**	29013	4x29013					

© JURID / All rights reserved 2005

© JURID / All rights reserved 2005

Renault Trucks (Renault VI)...

...

Midliner / S...

S130.06, S130.07, S130.08	87-	•		**1782903320** **1782909530**		310	100x9.5x245 100x9.5x209				17829 17830	2x17829 + 2x17830	2xBT/76/1 + 2xSA/25/1	**8102050009**	**810500J**	56	5x13x9.5-180°
	87-		•	**1783103320**		310	125x10.0x209 125x10.0x245				17831 17832	2x17831 + 2x17832	2xSA/27/1 + 2xSA/26/1	**8102050009**	**810500J**	64	5x13x9.5-180°
S150.11 **S130.13, S130.14** *(Garbage Truck,Tanker)* **S150.13, S150.14***(Tanker)* **S130.11***(Garbage Truck)*	83-86	•		**2901303371** **2901309561**	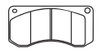	354	180x20.5x86	**567949J**		**587014J**	29013	4x29013					
S130.11, S130.13, S130.14 *(Garbage Truck,Tanker)*	86-	•		**2901303372**		354	180x20.5x86	**567949J**		**587014J**	29013	4x29013					
S150.11, S150.13, S150.14 *(TI Garbage Truck,TI Tanker)*	86-		•	**1925503270**		360	170x12.8/16.8/15.4x247 170x12.8/16.8/10.8x334				19255 19259	2x19255 + 2x19259	2xRN/102/1 + 2xRN/103/1	**8102050007**	**810500J**	80	5x12x11-180°
S150.11 **S130.11***(Garbage Truck)*	83-86	•		**1758203320**		356	100x10.0x349 100x10.0x322				17582 17805	2x17582 + 2x17805	2xSA/24/1 + 2xBT/53/1	**8102050009**	**810500J**	64	5x13x9.5-180°
S130.13, S130.14 *(Garbage Truck,Tanker)* **S150.13, S150.14***(Tanker)*	83-86		•	**1962203320**		394	152x12.7x354				19622	4x19622	4xLH/82/2	**8102060004**		64	6x13.5x11-180°
S130	95-	•				304		**567955J**									
S160.07, S160.08 **S180.07, S180.08***(A)*	95-	•		**2906503341** **2906509560**		322	175x22x85.5	**567956J**		**587016J**	29065	4x29065					
S160.09 **S180.09, S180.10***(B)*	95-	•		**2906703341** **2906709560**	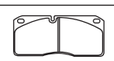	322	175.5x22x78	**567956J**		**587016J**	29067	4x29067					
S170.11, S170.13	88-	•		**2901303372**		354	180x20.5x86	**567949J**		**587014J**	29013	4x29013					
	88-		•	**1925503270**		360	170x12.8/16.8/15.4x247 170x12.8/16.8/10.8x334				19255 19259	2x19255 + 2x19259	2xRN/102/1 + 2xRN/103/1	**8102050007**	**810500J**	80	5x12x11-180°
S170.11, S170.13, S170.14 *(SH Garbage Truck,* *SP Garbage Truck,TI Garbage Truck)*	83-88	•		**1730603270**		414	125x13.5x347 125x12.5x285				17306 17309	2x17306 + 2x17309	2xBT/56/1 + 2xBT/57/1	**8103060007**	**810600J**	116	6x15x11.5-180°
	83-88		•	**1904903270**		414	150x13x285.94 285x12.5x285				19049 19199	2x19049 + 2x19199	2xSA/10/1 + 2xSA/11/1	**8102060005**		96	6x13.5x12-180°
S220*(TI)*	83-	•		**1730603270**		414	125x13.5x347 125x12.5x285				17306 17309	2x17306 + 2x17309	2xBT/56/1 + 2xBT/57/1	**8103060007**	**810600J**	116	6x15x11.5-180°
	83-		•	**1904903270**		414	150x13x285.94 285x12.5x285				19049 19199	2x19049 + 2x19199	2xSA/10/1 + 2xSA/11/1	**8102060005**		96	6x13.5x12-180°
S90.09*(Garbage Truck,Tanker)*	83-	•		**1782703320** **1782709530**		325	120x12.5x251 120x12.5x209				17827 17828	2x17827 + 2x17828	2xSA/28/1 + 2xSA/29/1	**8102050009**	**810500J**	60	5x13x9.5-180°
	83-		•	**1962003320**		325	150x12.5x209.4 150x12.5x251.3				19620 19621	2x19620 + 2x19621	2xSA/30/1 + 2xSA/31/1	**8102050009**	**810500J**	64	5x13x9.5-180°

Midlum

135.1, 150.12, 150.1, 210.08, 210.09, 210.1 *(B(O) : Wabco(PAN17) 17.5")*	01/00-	•		**2908809560**		330	175.6x26x85	**569115J**			29088	4x29088					
180.08, 180.09, 180.12, 180.1 *(B(O) : Wabco(PAN17) 17.5",* *C(O) : Wabco(PAN17) 17.5")*	01/00-		•	**2908809560**		330	175.6x26x85	**569116J**			29088	4x29088					

© JURID / All rights reserved 2005

© JURID / All rights reserved 2005

→STOCK STOCK→ mm WVA BFMC JURID SUPASET #

Renault Trucks (Renault VI)...

...

Midlum...

250.16 *(C(O) : Wabco(PAN19-2) 19.5",CT (O) : Wabco(PAN19-2) 19.5")* **210.12, 210.13, 210.14, 210.15, 210.16, 250.12, 250.13, 250.14, 250.15** *(C(O) : Wabco(PAN19-2) 19.5")*	03/01-	•	**2914209569**		375	204.6x30x99.6	**569119J**		29142	4x29142	
210.12, 210.13, 210.14, 210.15, 210.16, 250.12, 250.13, 250.14, 250.15 *(C(O) : Wabco(PAN19-2) 19.5" 8 holes)* **250.16** *(C(O) : Wabco(PAN19-2) 19.5" 8 holes, CT(O) : Wabco(PAN19-2) 19.5" 8 holes)*	03/01-	•	**2914209569**		375	204.6x30x99.6	**569117J**		29142	4x29142	
210.12, 210.13, 210.14, 210.15, 210.16, 250.12, 250.13, 250.14, 250.15 *(C(O) : Wabco(PAN19-2) 19.5" 10 holes)* **250.16** *(C(O) : Wabco(PAN19-2) 19.5" 10 holes, CT(O) : Wabco(PAN19-2) 19.5" 10 holes)*	03/01-	•	**2914209569**		375	204.6x30x99.6	**569118J**		29142	4x29142	
210.12, 210.14, 210.16*(C(O) : Lucas/Meritor(C Lisa)* **19.5")**	03/00-02/01	•	**2910009560**			214x25x112			29100	4x29100	
	03/00-02/01	•	**2910009560**			214x25x112			29100	4x29100	
210.13, 210.15, 250.12, 250.13, 250.14, 250.15 *(C(O) : Lucas/Meritor(C Lisa) 19.5")*	01/00-02/01	•	**2910009560**			214x25x112			29100	4x29100	
250.16 *(C(O) : Lucas/Meritor(C Lisa) 19.5", CT(O) : Lucas/Meritor(C Lisa) 19.5")*	01/00-02/01	•	**2910009560**			214x25x112			29100	4x29100	
220 *((O) : Wabco(PAN19-1) 4x4 19.5")*	03-	• •	**2915905399**			210.45x30x92.3			29159	4x29159	
270*((O) : Lucas/Meritor(D Elsa 2))*	03/01-	•	**2913109560**		438	249.63x30x118.2	**567953J**		29131	4x29131	
	03/01-	•	**2913109560**			249.63x30x118.2			29131	4x29131	

Premium

210*(16D,18D)* **300***(16D,16T,18D,18T,19D,19T,26D)* **385***(18T,19T,24T,26T)* **250***(16,18D,19)* **340***(18D,18T,19D,19T,24,26D,26T)* **260***(16,18,19)*	06/00-	• •	**2913109560**			249.63x30x118.2			29131	4x29131	

JURID by Honeywell © JURID / All rights reserved 2005
© JURID / All rights reserved 2005 JURID by Honeywell

Renault Trucks (Renault VI)...

				STOCK	STOCK	⌀ mm				WVA	BFMC	JURID	SUPASET	#				
Premium...																		
250 *(16D,18D,19)* **340** *(18D,18T,19D,19T,24,26D)* **210** *(16D,18D)* **300** *(16,18D,18T,19,19D,19T,26D)* **385** *(18T,19T,24T,26T)* **260** *(16,18,19)*	96-00	•			**2903005392** **2903009560**		438	250x28x118	**567953J**	**587026J**	29030	4x29030						
210, 250, 260, 300, 340, 385	96-	•			**2909005392** **2909009560**		438	249x28x114	**567953J**	**587027J**	29090	4x29090						
	96-		•	**1918709550**	**1918703270** **1918701230**		414	220x18.5x183.7			19187	8x19187	8xRN/104/1	**8103080005**	**810800J**	128	8x18x15.5-180°
Special																		
110.17 *(TI 4x4)*	91-	•		**1701709580**			360	143x16.3/11.3x190			17017	8x17017	8xGG/217/1	**8103080003**	**810800J**	64	8x15x15.5-180°
110.15, 85.15 *(4x4)*	91-	•			**1724405380**		360	143x16.3/12.6x173			17244	8x17244	8xPD/2/1	**8103080003**	**810800J**	64	8x15x15.5-180°
	91-		•		**1925503270**		360	170x12.8/16.8/15.4x247 170x12.8/16.8/10.8x334			19255 19259	2x19255 + 2x19259	2xRN/102/1 + 2xRN/103/1	**8102050007**	**810500J**	80	5x12x11-180°
110.15, 95.13 *(4x4)*	81-		•		**1758203320**		356	100x10.0x349 100x10.0x322			17582 17805	2x17582 + 2x17805	2xSA/24/1 + 2xBT/53/1	**8102050009**	**810500J**	64	5x13x9.5-180°
75.13 *(4x4)* **85.15** *(4x4,TI Turbo 4x4)*	81-	•	•		**1758203320**		356	100x10.0x349 100x10.0x322			17582 17805	2x17582 + 2x17805	2xSA/24/1 + 2xBT/53/1	**8102050009**	**810500J**	64	5x13x9.5-180°
M180 *(FTP)* **CE160, CE180, ME160, ME180, SE160, SE180** *(15T)*			•		**1904903270**		414	150x13x285.94 285x12.5x285			19049 19199	2x19049 + 2x19199	2xSA/10/1 + 2xSA/11/1	**8102060005**		96	6x13.5x12-180°
CE160, CE180, ME160, ME180, SE160, SE180		•		**1701709580**			360	143x16.3/11.3x190			17017	8x17017	8xGG/217/1	**8103080003**	**810800J**	64	8x15x15.5-180°
(4x4)		•			**1724405380**		360	143x16.3/12.6x173			17244	8x17244	8xPD/2/1	**8103080003**	**810800J**	64	8x15x15.5-180°
CE160, CE180, ME160, ME180, SE160, SE180 *(15T)*		•			**17530**		414	125x12.5x370 125x12.5x370			17530 17531	2x17530 + 2x17531	2xBT/57/1 + 2xBT/56/1				
CE160, CE180, ME160, ME180, SE160, SE180 *(13T)*		•			**1780401820**		394	127x12.7x354			17804	4x17804	4xDO/80/2	**8102060005**		64	6x13.5x12-180°
CE160, CE180, ME160, ME180, SE160, SE180 *(4x4)*			•		**1925503270**		360	170x12.8/16.8/15.4x247 170x12.8/16.8/10.8x334			19255 19259	2x19255 + 2x19259	2xRN/102/1 + 2xRN/103/1	**8102050007**	**810500J**	80	5x12x11-180°
CE160, CE180, ME160, ME180, SE160, SE180 *(13T)*			•		**1962203320**		394	152x12.7x354			19622	4x19622	4xLH/82/2	**8102060004**		64	6x13.5x11-180°
Kerax																		
260, 300, 340, 385	97-	•		**1993509580** **1993509530**	**1993503270** **1993501230** **1993501230**		414	175x18.5x184			19935	8x19935	8xRN/101/1	**8103080005**	**810800J**	64	8x18x15.5-180°
	97-		•	**1993509580** **1993509530**	**1993503270** **1993501230** **1993501230**		414	175x18.5x184			19935	8x19935	8xRN/101/1	**8103080005**	**810800J**	64	8x18x15.5-180°

© JURID / All rights reserved 2005

© JURID / All rights reserved 2005

Renault Trucks (Renault VI)...

												WVA	BFMC					
																JURID	SUPASET	#
Agora	95-	•			**2903005392** **2903009560**		438	250x28x118	**567953J**		**587026J**	29030	4x29030					
	95-		•		**1918703280**		414	220x18.5x183.7				19187	8x19187	8xRN/104/1	**8103080005**	**810800J**	128	8x18x15.5-180°
E7, S57 *(L,M,N)*	69-	•			**1730603270**		414	125x13.5x347 125x12.5x285				17306 17309	2x17306 + 2x17309	2xBT/56/1 + 2xBT/57/1	**8103060007**	**810600J**	116	6x15x11.5-180°
	69-		•		**1947903290**		414	175x15.8/19.0/11.9x345 175x17.2/19.0/15.8x252				19479 19480	2x19479 + 2x19480	2xLF/100/1 + 2xLF/101/1	**8103060008**		112	6x16x12-180°
FR1 *(L1 6.2m,L3 5.4m)*	93-	•			**2904403331** **2904409561**		400	236x20x95	**567951J**			29044	4x29044					
FR1 *(GT1,GT2,GTX,T1,T2,TX)*	-92	•			**2904403331** **2904409561**		400	236x20x95	**567951J**			29044	4x29044					
FR1 *(L3 5.4m)*	93-		•	**1993509580**	**1993503280**		414	175x18.5x184				19935	8x19935	8xRN/101/1	**8103080005**	**810800J**	64	8x18x15.5-180°
FR1 *(L1 6.2m)*	93-		•		**1918703280**		414	220x18.5x183.7				19187	8x19187	8xRN/104/1	**8103080005**	**810800J**	128	8x18x15.5-180°
FR1 *(GT1,GT2,GTX,T1,T2,TX)*	-92		•	**1993509580**	**1993503280**		414	175x18.5x184				19935	8x19935	8xRN/101/1	**8103080005**	**810800J**	64	8x18x15.5-180°
Illiade *(GTC,GTX,RT,RTC,RTX,TE)*	06/00-	•	•		**2913109560**			249.63x30x118.2				29131	4x29131					
	97-00	•	•		**2903005392** **2903009560**			250x28x118				29030	4x29030					
Illiade	97-	•			**2904403331** **2904409561**		400	236x20x95	**567951J**			29044	4x29044					
	97-		•		**1918703280**		414	220x18.5x183.7				19187	8x19187	8xRN/104/1	**8103080005**	**810800J**	128	8x18x15.5-180°
PCM, PCMV, PCR, PGR	64-71	•	•		**1904903280**		414	150x12.5x347 285x12.5x285				19049 19199	2x19049 + 2x19199	2xSA/10/1 + 2xSA/11/1	**8102060005**		96	6x13.5x12-180°
PER *(180)*	77-	•			**1904903280**		414	150x12.5x347 285x12.5x285				19049 19199	2x19049 + 2x19199	2xSA/10/1 + 2xSA/11/1	**8102060005**		96	6x13.5x12-180°
PR *(100.2,100M1,180,180.2)*	77-		•	**1965709580**	**1965703280**		414	175x13.5x370				19657	4x19657	4xBT/59/6	**8103080005**	**810800J**	72	8x18x15.5-180°
PGK *(205,205D)*	75-	•			**1730603270**		414	125x13.5x347 125x12.5x285				17306 17309	2x17306 + 2x17309	2xBT/56/1 + 2xBT/57/1	**8103060007**	**810600J**	116	6x15x11.5-180°
	75-		•		**1904903280**		414	150x12.5x347 285x12.5x285				19049 19199	2x19049 + 2x19199	2xSA/10/1 + 2xSA/11/1	**8102060005**		96	6x13.5x12-180°
PH *(12/100,3,4,8/100)*	69-72	•	•		**1904903280**		414	150x12.5x347 285x12.5x285				19049 19199	2x19049 + 2x19199	2xSA/10/1 + 2xSA/11/1	**8102060005**		96	6x13.5x12-180°
PR *(10S,12S,14S/SL)*	76-	•			**1730603270**		414	125x13.5x347 125x12.5x285				17306 17309	2x17306 + 2x17309	2xBT/56/1 + 2xBT/57/1	**8103060007**	**810600J**	116	6x15x11.5-180°
PR *(14SR,14SR GT)*	76-	•			**1904903280**		414	150x12.5x347 285x12.5x285				19049 19199	2x19049 + 2x19199	2xSA/10/1 + 2xSA/11/1	**8102060005**		96	6x13.5x12-180°
PR *(100.3,112,118,180.3)*	94-	•		**1993509580**	**1993503280**		414	175x18.5x184				19935	8x19935	8xRN/101/1	**8103080005**	**810800J**	64	8x18x15.5-180°
PR *(10S,12S,14S/SL,14SR,14SR GT)*	76-		•		**1904903280**		414	150x12.5x347 285x12.5x285				19049 19199	2x19049 + 2x19199	2xSA/10/1 + 2xSA/11/1	**8102060005**		96	6x13.5x12-180°
PR *(100.3,112,118,180.3)*	94-		•		**184200185328**													
R312	90-	•	•		**2907203341**		350	169.5x19x111	**567950J**			29072	8x29072					
R312 *(Ⓒ : Park)*	90-	•			**577008J**		350	110x13x58										
S105, S180, S45, S53	65-	•			**1904903280**		414	150x12.5x347 285x12.5x285				19049 19199	2x19049 + 2x19199	2xSA/10/1 + 2xSA/11/1	**8102060005**		96	6x13.5x12-180°
	65-		•		**1904903280**		414	150x12.5x347 285x12.5x285				19049 19199	2x19049 + 2x19199	2xSA/10/1 + 2xSA/11/1	**8102060005**		96	6x13.5x12-180°

© JURID / All rights reserved 2005

© JURID / All rights reserved 2005

				→STOCK	STOCK→	⌀ mm					WVA		BFMC	JURID	SUPASET	#		

Renault Trucks (Renault VI)...

...

S57 *(L)*	80-	•			**1730603270**	414	125x13.5x347 125x12.5x285		17306 17309	2x17306 + 2x17309	2xBT/56/1 + 2xBT/57/1	**8103060007**	**810600J**	116	6x15x11.5-180°
	80-		•		**1904903280**	414	150x12.5x347 285x12.5x285		19049 19199	2x19049 + 2x19199	2xSA/10/1 + 2xSA/11/1	**8102060005**		96	6x13.5x12-180°
SC10, SC45	76-	•	•		**1904903280**	414	150x12.5x347 285x12.5x285		19049 19199	2x19049 + 2x19199	2xSA/10/1 + 2xSA/11/1	**8102060005**		96	6x13.5x12-180°
SC50	72-79	•			**1724703320**	406	100x10.0x346 100x10.0x284		17247 17305	2x17247 + 2x17305	2xSA/8/1 + 2xSA/9/1	**8102050010**	**810500J**	52	5x13.5x11-180°(CT/BK)
	72-79		•		**1750003320**	406	100x10.0x284 100x10.0x346		17500 17506	2x17500 + 2x17506	2xSA/17/1 + 2xSA/18/1	**8103054001**	**810540J**	80	5.4x14.5x10.5-180°(BK)
SG220	78-	•			**1949405380**	410	163x17.0/11.8x178		19494	8x19494	8xMP/31/2	**8162080001**	**810800J**	64	8x15x15.5-180°
	78-		•		**1949405380**	410	163x17.0/11.8x178		19494	8x19494	8xMP/31/2	**8162080001**	**810800J**	64	8x15x15.5-180°
Tracer	92-	•		**1993409580** **1993409530**	**1993403280**	414	150x18.5x184		19934	8x19934	8xRN/100/1	**8103080005**	**810800J**	64	8x18x15.5-180°
	92-		•	**1993509580**	**1993503280**	414	175x18.5x184		19935	8x19935	8xRN/101/1	**8103080005**	**810800J**	64	8x18x15.5-180°

Renault Trucks (Renault VI Barreiros)

20/26, 42/14, 42/16, 42/17, 42/20, 42/38, 62/26, 64/26	71-	•		**1980809580**		406	200x15.5/13.8x166 200x15.4/9.6x166		19808 19809	4x19808 + 4x19809		**8103080003**	**810800J**	72	8x15x15.5-180°
	71-		•		**1796309530**	423	145x15.3/9.5x173 145x15.3/13.6x173		17963 17964	4x17963 + 4x17964	4xDO/86/1 + 4xDO/85/1	**8103080003**	**810800J**	72	8x15x15.5-180°
4220B, BS210, BS312 *(Turbo 200,Turbo 300)* **3582C, 8235B** *(Turbo 300)*		•	•	**1980809580**		406	200x15.5/13.8x166 200x15.4/9.6x166		19808 19809	4x19808 + 4x19809		**8103080003**	**810800J**	72	8x15x15.5-180°
3582C, 8235B *(Turbo 300)*			•	**1980409580**		406	152x15.5/13.8x166 152x15.4/9.6x166		19804 19805	4x19804 + 4x19805	4xDO/87/1 + 4xDO/88/1	**8103080003**	**810800J**	72	8x15x15.5-180°
C14, C16, C17, C19, C20 *(A,AT,E,E 2000,ET)* **D14, D16, D20** *(Turbo 150,Turbo 200)* **3582C, 8235B** *(Turbo 300)*		•			**1796309530**	423	145x15.3/9.5x173 145x15.3/13.6x173		17963 17964	4x17963 + 4x17964	4xDO/86/1 + 4xDO/85/1	**8103080003**	**810800J**	72	8x15x15.5-180°
4600, 5300, 6000	70-	•		**1980809580**		406	200x15.5/13.8x166 200x15.4/9.6x166		19808 19809	4x19808 + 4x19809		**8103080003**	**810800J**	72	8x15x15.5-180°
	70-		•		**1796309530**	423	145x15.3/9.5x173 145x15.3/13.6x173		17963 17964	4x17963 + 4x17964	4xDO/86/1 + 4xDO/85/1	**8103080003**	**810800J**	72	8x15x15.5-180°
6426, D2570VB		•	•		**1796309530**	423	145x15.3/9.5x173 145x15.3/13.6x173		17963 17964	4x17963 + 4x17964	4xDO/86/1 + 4xDO/85/1	**8103080003**	**810800J**	72	8x15x15.5-180°
C14, C16, C17, C19, C20 *(A,AT,E,E 2000,ET)* **D14, D16, D20** *(Turbo 150,Turbo 200)*			•	**1980809580**		406	200x15.5/13.8x166 200x15.4/9.6x166		19808 19809	4x19808 + 4x19809		**8103080003**	**810800J**	72	8x15x15.5-180°
D270.34, D340.26, DG210.20, DG230.20	86-	•		**1980809580**		406	200x15.5/13.8x166 200x15.4/9.6x166		19808 19809	4x19808 + 4x19809		**8103080003**	**810800J**	72	8x15x15.5-180°
DG170.14, DG170.17, DG290.26	86-		•	**1980409580**		406	152x15.5/13.8x166 152x15.4/9.6x166		19804 19805	4x19804 + 4x19805	4xDO/87/1 + 4xDO/88/1	**8103080003**	**810800J**	72	8x15x15.5-180°

© JURID / All rights reserved 2005

© JURID / All rights reserved 2005

Renault Trucks (Renault VI Barreiros)...

A*(131,151)*	70-	•		**1980809580**		406	200x15.5/13.8x166 200x15.4/9.6x166		19808 19809	4x19808 + 4x19809		**8103080003**	**810800J**	72	8x15x15.5-180°
	70-		•		**1796309530**	423	145x15.3/9.5x173 145x15.3/13.6x173		17963 17964	4x17963 + 4x17964	4xDO/86/1 + 4xDO/85/1	**8103080003**	**810800J**	72	8x15x15.5-180°
A*(320)*	86-	•		**1980809580**		406	200x15.5/13.8x166 200x15.4/9.6x166		19808 19809	4x19808 + 4x19809		**8103080003**	**810800J**	72	8x15x15.5-180°

Renault Trucks (Saviem)

HB15, HB26, HF15, HF26 *(B,BT,CT,ET,T)*	78-80	•			**1730603270**	414	125x13.5x347 125x12.5x285		17306 17309	2x17306 + 2x17309	2xBT/56/1 + 2xBT/57/1	**8103060007**	**810600J**	116	6x15x11.5-180°
	78-80		•		**1904903270**	414	150x13x285.94 285x12.5x285		19049 19199	2x19049 + 2x19199	2xSA/10/1 + 2xSA/11/1	**8102060005**		96	6x13.5x12-180°
HB17, HF17, HF26V *(B 6x4,BOM 6x4 Garbage Truck, C 6x4,CIT 6x4)*	78-80	•	•		**1904903270**	414	150x13x285.94 285x12.5x285		19049 19199	2x19049 + 2x19199	2xSA/10/1 + 2xSA/11/1	**8102060005**		96	6x13.5x12-180°
HB19*(B)*	78-80	•			**1904903270**	414	150x13x285.94 285x12.5x285		19049 19199	2x19049 + 2x19199	2xSA/10/1 + 2xSA/11/1	**8102060005**		96	6x13.5x12-180°
	78-80		•	**1965709580**	**1965703270**	414	175x13.5x370		19657	4x19657	4xBT/59/6	**8103080005**	**810800J**	72	8x18x15.5-180°
HB26*(BT,T)*	78-80	•			**1968003270**	414	150x20.0/15.2x368		19680	4x19680	4xSA/34/1	**8102060005**		104	6x13.5x12-180°
HL38*(A,B,C,T)*	78-82	•			**1968003270**	414	150x20.0/15.2x368		19680	4x19680	4xSA/34/1	**8102060005**		104	6x13.5x12-180°
HL38*(T)*	78-82		•		**1968200**	414			19682	4x19682	4xSA/35/1				
HM15, HM17, HM19, HM26 *(B,BT,T)*	76-80	•			**1968003270**	414	150x20.0/15.2x368		19680	4x19680	4xSA/34/1	**8102060005**		104	6x13.5x12-180°
HN26*(CT,T)*	77-80	•			**1968003270**	414	150x20.0/15.2x368		19680	4x19680	4xSA/34/1	**8102060005**		104	6x13.5x12-180°
PR40*(T 8 VT,V 8 VT)*	79-	•		**1949409580** **1949409530**	**1949405380** **1949401230** **1949401230**	410	163x17.0/11.8x178		19494	8x19494	8xMP/31/2	**8162080001**	**810800J**	64	8x15x15.5-180°
	79-		•		**1949505380**	410	183x17.0/11.8x178		19495	8x19495	8xMP/32/2	**8162080002**	**810800J**	64	8x18x15.5-180°
PS30*(BT,T1)*	10/78-81	•			**1968003270**	414	150x20.0/15.2x368		19680	4x19680	4xSA/34/1	**8102060005**		104	6x13.5x12-180°
PS30*(T 8 VT,V 8 VT)*	78-	•		**1949409580** **1949409530**	**1949405380** **1949401230** **1949401230**	410	163x17.0/11.8x178		19494	8x19494	8xMP/31/2	**8162080001**	**810800J**	64	8x15x15.5-180°
	78-		•	**1949509580** **1949509530**	**1949505380** **1949501230** **1949501230**	410	183x17.0/11.8x178		19495	8x19495	8xMP/32/2	**8162080002**	**810800J**	64	8x18x15.5-180°
PX28, PX30, PX40*(T)*	79-81	•	•		**1904903270**	414	150x13x285.94 285x12.5x285		19049 19199	2x19049 + 2x19199	2xSA/10/1 + 2xSA/11/1	**8102060005**		96	6x13.5x12-180°
	79-81		•	**1965709580**	**1965703270**	414	175x13.5x370		19657	4x19657	4xBT/59/6	**8103080005**	**810800J**	72	8x18x15.5-180°
	79-81		•		**1965503270**	414	175x14.0x371		19655	4x19655	4xBT/59/1	**8103080005**	**810800J**	84	8x18x15.5-180°
SM12, SM13, SM170, SM240, SM260, SM300	68-79	•		**1949409580** **1949409530**	**1949405380** **1949401230** **1949401230**	410	163x17.0/11.8x178		19494	8x19494	8xMP/31/2	**8162080001**	**810800J**	64	8x15x15.5-180°
SM280*(TU)* **S190, S200***(M)*	68-79	•			**1741015380**	420	140x19.5/18.3x179 140x19.5/10.0x179		1741008 1741108	4x1741008 + 4x1741108	4xMP/34/1 + 4xMP/35/1	**8135100003**		56	10x18x18.5-140°(BQ/BW)
SM170, SM240, SM260, SM300	68-79		•		**1947305380**	440	160x18.4/15.5x184 160x18.4/10.4x184		19473 19747	4x19473 + 4x19474	4xMP/25/1 + 4xMP/26/1	**8135100003**		60	10x18x18.5-140°(BQ/BW)
SM280*(TU)* **S190, S200***(M)*	68-79		•		**1963903270**	420	200x14.0x386		19639	4x19639	4xSA/23/1	**8103080009**	**810800J**	64	8x25x15.5-180°

© JURID / All rights reserved 2005

© JURID / All rights reserved 2005

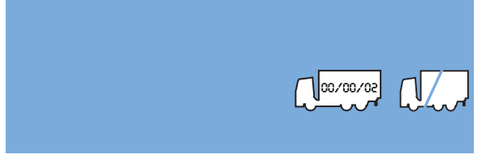

Renault Trucks (Saviem)...

...

SG1, SG2		•	**1569803320**	305	80x7.5x292		15698	4x15698	4xSA/14/1	**8103040002**	**810400J**	48	4x8x7.5-180°
		•	**1346403320**	305	45x7.5x318 45x7.5x265		13464 13465	2x13464 + 2x13465	2xSA/15/1 + 2xSA/16/1	**8103040002**	**810400J**	52	4x8x7.5-180°
SG3	73-	•	**1525303320**	305	70x5.0x270 70x5.0x332		15253 15254	2x15253 + 2x15254	2xSA/21/1 + 2xSA/20/1	**8102040001**	**810400J**	52	4x7x7.5-180°
SG4*(Option)*		•	**1774403320**	325	100x10.0x272		17744	4x17744		**8102050004**	**810500J**	72	5x10x11-180°
SG4, SG5		•	**1510403320**	360	75x6.5x361 75x6.5x304		15104 15107	2x15104 + 2x15107	2xRN/58/1 + 2xRN/57/1	**8103040002**	**810400J**	52	4x8x7.5-180°
SG5*(Option)*		• •	**1774403320**	325	100x10.0x272		17744	4x17744		**8102050004**	**810500J**	72	5x10x11-180°
SM10	-78	•	**1723805380** **1768309530**	410	143x17.0/11.8x178		17238	8x17238	8xMP/30/2	**8162080002**	**810800J**	64	8x18x15.5-180°
	-78	•	**1947305380**	440	160x18.4/15.5x184 160x18.4/10.4x184		19473 19747	4x19473 + 4x19474	4xMP/25/1 + 4xMP/26/1	**8135100003**		60	10x18x18.5-140°(BQ/BW)
	-78	•	**1947513270**	440	180x19.5/16.6x184 180x19.5/11.5x184		1947508 1947608	4x1947508 + 4x1947608	4xMP/27/1 + 4xMP/28/1	**8135100003**		60	10x18x18.5-140°(BQ/BW)
SM12, SM13	68-79	•	**1947513270**	440	180x19.5/16.6x184 180x19.5/11.5x184		1947508 1947608	4x1947508 + 4x1947608	4xMP/27/1 + 4xMP/28/1	**8135100003**		60	10x18x18.5-140°(BQ/BW)
SM170PE, SM180, SM240, SM280, SM300 *(H,HT,V,VT)*	74-79	•	**1741015380**	420	140x19.5/18.3x179 140x19.5/10.0x179		1741008 1741108	4x1741008 + 4x1741108	4xMP/34/1 + 4xMP/35/1	**8135100003**		56	10x18x18.5-140°(BQ/BW)
	74-79	•	**1947513270**	440	180x19.5/16.6x184 180x19.5/11.5x184		1947508 1947608	4x1947508 + 4x1947608	4xMP/27/1 + 4xMP/28/1	**8135100003**		60	10x18x18.5-140°(BQ/BW)
SM300*(6x6)* **SM260, SM32.230, SM340** *(H,HT,V,VT)*	74-80	•	**1949405380** **1949409580** **1949401230** **1949409530** **1949401230**	410	163x17.0/11.8x178		19494	8x19494	8xMP/31/2	**8162080001**	**810800J**	64	8x15x15.5-180°
SM260, SM32.230, SM340 *(H,HT,V,VT)*	74-80	•	**1741015380**	420	140x19.5/18.3x179 140x19.5/10.0x179		1741008 1741108	4x1741008 + 4x1741108	4xMP/34/1 + 4xMP/35/1	**8135100003**		56	10x18x18.5-140°(BQ/BW)
	74-80	•	**1949405380** **1949409580** **1949401230** **1949409530** **1949401230**	410	163x17.0/11.8x178		19494	8x19494	8xMP/31/2	**8162080001**	**810800J**	64	8x15x15.5-180°
	74-80	•	**1963903270**	420	200x14.0x386		19639	4x19639	4xSA/23/1	**8103080009**	**810800J**	64	8x25x15.5-180°
SM300*(6x6)*	74-80	•	**1723805380** **1768309530**	410	143x17.0/11.8x178	**587017J** **587018J**	17238	8x17238	8xMP/30/2	**8162080002**	**810800J**	64	8x18x15.5-180°
SM340	74-79	•	**1949405380** **1949409580** **1949401230** **1949409530** **1949401230**	410	163x17.0/11.8x178		19494	8x19494	8xMP/31/2	**8162080001**	**810800J**	64	8x15x15.5-180°
	74-79	•	**1949505380** **1949509580** **1949501230** **1949509530** **1949501230**	410	183x17.0/11.8x178		19495	8x19495	8xMP/32/2	**8162080002**	**810800J**	64	8x18x15.5-180°
SM5, SM6	67-76	• •	**1749705380**	356	100x10.0x302 100x10.0x349		17497 17498	2x17497 + 2x17498	2xBT/52/1 + 2xBT/53/1	**8102050009**	**810500J**	60	5x13x9.5-180°
SM7		• •	**1724703320**	406	100x10.0x346 100x10.0x284		17247 17305	2x17247 + 2x17305	2xSA/8/1 + 2xSA/9/1	**8102050010**	**810500J**	52	5x13.5x11-180°(CT/BK)
SM8*(15)*	76-77	•	**1730603270**	414	125x13.5x347 125x12.5x285		17306 17309	2x17306 + 2x17309	2xBT/56/1 + 2xBT/57/1	**8103060007**	**810600J**	116	6x15x11.5-180°
SM8*(T)*	-78	•	**1724703320**	406	100x10.0x346 100x10.0x284		17247 17305	2x17247 + 2x17305	2xSA/8/1 + 2xSA/9/1	**8102050010**	**810500J**	52	5x13.5x11-180°(CT/BK)
SM8*(13,D110,D130)*		•	**1750003320**	406	100x10.0x284 100x10.0x346		17500 17506	2x17500 + 2x17506	2xSA/17/1 + 2xSA/18/1	**8103054001**	**810540J**	80	5.4x14.5x10.5-180°(BK)
SM8*(15)*	76-77	•	**1904903270**	414	150x13x285.94 285x12.5x285		19049 19199	2x19049 + 2x19199	2xSA/10/1 + 2xSA/11/1	**8102060005**		96	6x13.5x12-180°
SM8*(T)*	-78	•	**1904903270**	414	150x13x285.94 285x12.5x285		19049 19199	2x19049 + 2x19199	2xSA/10/1 + 2xSA/11/1	**8102060005**		96	6x13.5x12-180°
SM8*(13,D110,D130)*		•	**1730703320**	406	125x10.0x346 125x10.0x284		17307 17308	2x17307 + 2x17308	2xBT/54/1 + 2xBT/55/1	**8102050009**	**810500J**	116	5x13x9.5-180°

© JURID / All rights reserved 2005

© JURID / All rights reserved 2005

					⌀ mm				WVA	BFMC	JURID	SUPASET	#			

Renault Trucks (Saviem / Man)

13168, 15168, 19168, 19192, 19240	78-	•	**1949509580** **1949509530**	**1949505380** **1949501230** **1949501230**	410	183x17.0/11.8x178		19495	8x19495	8xMP/32/2	**8162080002**	**810800J**	64	8x18x15.5-180°
13168, 15168, 19168, 19192, 19240, 26240, 32230, 32240, 32256	78-	•	**1949409580** **1949409530**	**1949405380** **1949401230** **1949401230**	410	163x17.0/11.8x178		19494	8x19494	8xMP/31/2	**8162080001**	**810800J**	64	8x15x15.5-180°
26240, 32230, 32240, 32256	78-	•	**1949409580** **1949409530**	**1949405380** **1949401230** **1949401230**	410	163x17.0/11.8x178		19494	8x19494	8xMP/31/2	**8162080001**	**810800J**	64	8x15x15.5-180°

Rolfo

⊢⊣ : BPW		•	**1903209550**	**1903204040** **1903201250**	420	180x17.5/10.5x204		19032	8x19032	8xBC/98/1	**8162080001**	**810800J**	80	8x15x15.5-180°
		•	**1909409550**	**1909404040** **1909401250**	420	200x17.5/10.5x204		19094	8x19094	8xBC/97/1	**8162080001**	**810800J**	80	8x15x15.5-180°
		•	**1957409550**	**1957404040** **1957401250**	300	200x18.0/11.0x145		19574	8x19574	8xBC/80/1	**8162080001**	**810800J**	64	8x15x15.5-180°
		•	**1520709580**		420	90x8.2x405		15207	4x15207	4xFI/79/1	**8103080003**	**810800J**	64	8x15x15.5-180°

Roman

Roman

	•		**1741005380**		420	140x18.5/17.3x179 140x18.5/9.0x179		17410 17411	4x17410 + 4x17411	4xMP/34/1 + 4xMP/35/1	**8135100003**		56	10x18x18.5-140°(BQ/BW)
	•		**1947305380**		440	160x18.4/15.5x184 160x18.4/10.4x184		19473 19747	4x19473 + 4x19474	4xMP/25/1 + 4xMP/26/1	**8135100003**		60	10x18x18.5-140°(BQ/BW)

SAE Dupillier

S3012		•		**1761203320**	305	125x10.0x275		17612	4x17612		**8102060004**		48	6x13.5x11-180°
S3018		•		**1944403290**	305	180x11.5x265		19444	4x19444		**8103060007**	**810600J**	64	6x15x11.5-180°
S3112, S3212		•		**1759203290**	305	125x12.5x142.33		17592	8x17592		**8103060007**	**810600J**	48	6x15x11.5-180°
S3115, S3215		•		**1940103290**	305	150x12.0x141		19401	8x19401	8xSJ/36/1	**8103060007**	**810600J**	64	6x15x11.5-180°
S3120, S3220		•		**1940503290**	305	200x12.0x141		19405	8x19405		**8103080003**	**810800J**	80	8x15x15.5-180°
S3312		•		**1789703290**	305	125x16.3/14.6x143 125x15.2/8.7x143		17897 17898	4x17897 + 4x17898		**8103080005**	**810800J**	48	8x18x15.5-180°
S3315		•		**1976003290**	305	150x16.3/14.6x143 150x15.2/8.7x143		19760 19761	4x19760 + 4x19761	4xSA/36/1 + 4xSA/37/1	**8103080005**	**810800J**	48	8x18x15.5-180°
S3320		•	**1976209550**	**1976203290** **1976201250**	305	200x16.3/14.6x143 200x15.2/8.7x143		19762 19763	4x19762 + 4x19763	4xLZ/2/1 + 4xLZ/3/1	**8103080005**	**810800J**	64	8x18x15.5-180°
S3515		•		**1954403290**	355	150x12.5x181		19544	8x19544				64	
		•		**1991203290**	355	150x18.3/9.4x160 150x19.2/14.6x169		19912 19913	4x19912 + 4x19913	4xLZ/5/1 + 4xLZ/4/1	**8162080002**	**810800J**	80	8x18x15.5-180°
S3520		•		**1989204040** **1989209550**	355	200x18.2/8.9x160 200x18.3/14.1x169		19892 19893	4x19892 + 4x19893	4xSJ/26/1 + 4xSJ/27/1	**8162080002**	**810800J**	80	8x18x15.5-180°

JURID by Honeywell

© JURID / All rights reserved 2005

© JURID / All rights reserved 2005

JURID by Honeywell

S

SAE Dupillier...

S4140	•		**1776003290**		405	100x12.0x191		17760	8x17760		**8103060007**	**810600J**	48	6x15x11.5-180°
S4215	•		**1935903290**		414	150x19.0/9.1x202 151x19.0/14.8x200		19359 19360	4x19359 + 4x19360		**8102060009**		64	6x18x12-180°
S4216, S4416	•		**1920004040**		420	160x18.0/11.0x204		19200	8x19200	8xBC/35/1	**8162080001**	**810800J**	80	8x15x15.5-180°
S4220, S4420	•	**1909409580**	**1909404040** **1909401250**		420	200x17.5/10.5x204		19094	8x19094	8xBC/97/1	**8162080001**	**810800J**	80	8x15x15.5-180°
S4221	•		**1936703290**		414	211x17.7/9.6x202 211x18.6/15.2x220		19367 19368	4x19367 + 4x19368		**8102060009**		96	6x18x12-180°
	•	**1903609580**	**1903604040** **1903601230**		419	178x19.0/16.0x189 178x18.2/11.5x194		19036 19037	4x19036 + 4x19037	4xRW/5/4 + 4xRW/6/4	**8103050014**	**810500J**	96	5x16x12-180°
	•	**1936509580** **1936509550**	**1936504040** **1936501230** **1936501230**		419	203x18.6/15.7x188 203x18.6/15.7x188		19365 19366	4x19365 + 4x19366	4xRW/2/1 + 4xRW/1/1	**8103050014**	**810500J**	96	5x16x12-180°
	•		**1910304040**		300	200x10.0x141		19103	8x19103	8xBC/55/1	**8162080001**	**810800J**	64	8x15x15.5-180°
	•		**273150130329**		305	150x13.0x273								
(O) : **Knorr** *(SB 6000)* **19.5"**	•		**2909305390**			210.7x30x92.5		29093	4x29093					
(O) : **Knorr** *(SB 7000)* **22.5"**	•		**2910815390**			248x30x109		29108	4x29108					
	•		**310200120329**		305	200x12.0x310								

SAF Sauer

10042, 6042, 7042, 8042, 8142, 8342, RS 9042, SK 9042 **RS/RSM9042** *(+ABS)*	•	**1903209580**	**1903204040** **1903201250**		420	180x17.5/10.5x204		19032	8x19032	8xBC/98/1	**8162080001**	**810800J**	80	8x15x15.5-180°
11042, 11242, 11842, 12042, 13042, 8143, 8242, 8442 **RS/RSM9042** *(+ABS)*	•	**1909409580**	**1909404040** **1909401250**		420	200x17.5/10.5x204		19094	8x19094	8xBC/97/1	**8162080001**	**810800J**	80	8x15x15.5-180°
A 80, EB 1835, EBU 2535, EBU 3325, EZ 2635, IB 1935, K 100, K 125 FL, K 80, M 4400-35 **A 100, A 125** *(FL)*	•		**1504404210**		350	60x6.0x339		15044	4x15044	4xFD/85/1	**8103060002**	**810600J**	40	6x10x11.5-180°
A 100, A 125, EB 2540, EB 3140, EB 3340, EB 3540, EB 3640, EB 3740, EBK 2540, EBK 3140, EBK 3340, EBK 3540, EBK 3640, EBK 3740, EBU 2540, EBU 3140, EBU 3340, EBU 3540, EBU 3640, EBU 3740, K 100, K 125-40	•		**1524705380**		400	80x8.0x389		15247	4x15247	4xFD/86/1	**8162080001**	**810800J**	40	8x15x15.5-180°
AP 40, K 40 FL, K 50 FL, K 60 FL, LB 40 FL, LB 50 FL, LB 60 FL, M 2650-25 **A 40, A 50, A 60** *(FL)*	•		**1128405360**		250	40x5.0x261		11284	4x11284	4xBW/1/1	**8102040003**	**810400J**	40	4x10x7.5-180°
EBN 3140, EBN 4040, ESN 4040	•		**1575104040**		400	80x11.7/9.3x194		15751	8x15751		**8103080003**	**810800J**	48	8x15x15.5-180°
ES 4040, ES 4540, ES 5040, ESK 4040, ESK 4540, ESK 5040, RS 6040, RZ 6040, WEZ 4040, WEZ 4540, WEZ 5040	•		**1711504040**		400	120x10.0x189		17115	8x17115	8xBC/39/1	**8162080002**	**810800J**	64	8x18x15.5-180°
ES50-30	•		**1910204040**		300	150x10.3x142		19102	8x19102	8xBC/54/1	**8162080001**	**810800J**	64	8x15x15.5-180°

© JURID / All rights reserved 2005

© JURID / All rights reserved 2005

				⌀ mm					WVA	BFMC	JURID	SUPASET	#			
		→STOCK	STOCK→													

SAF Sauer...

...

ESP 6042, RS 6042, RZ 6042, WMZ 6042, WRZU 6020	•		**1920004040**		420	160x18.0/11.0x204			19200	8x19200	8xBC/35/1	**8162080001**	**810800J**	80	8x15x15.5-180°
K 100 FL, K 50-30, K 60-5, K 60-6, K 80 FL, LB 60, M 3200-30, M 3600-30	•		**1500405380**		300	60x5.0x290			15004	4x15004	4xBC/52/1	**8102040003**	**810400J**	64	4x10x7.5-180°
RB 9019 *(Ⓞ : Wabco(PAN19) 19.5")*	•	**2912605399**	**2915905399**			210.5x30x92			29126	4x29126					
RS11041, RZ11042/203, WR11041, WRZ8141 *(⊢⊣ : N 400 10 holes, ⊢⊣ : N 400 6 holes)*	•	**1936509580** **1936509550**	**1936504040** **1936501230** **1936501230**		419	203x18.6/15.7x188 203x18.6/15.7x188			19365 19366	4x19365 + 4x19366	4xRW/2/1 + 4xRW/1/1	**8103050014**	**810500J**	96	5x16x12-180°
RS8041 *(⊢⊣ : L 200 MD 10 holes, ⊢⊣ : L 200 TEM 8 holes)*	•	**1903609580**	**1903604040** **1903601230**		419	178x19.0/16.0x189 178x18.2/11.5x194			19036 19037	4x19036 + 4x19037	4xRW/5/4 + 4xRW/6/4	**8103050014**	**810500J**	96	5x16x12-180°
RZ 8043, RZK 8043, RZT 8043	•		**1900545380**		430	150x12.3x205			19005	8x19005	8xBC/41/1	**8162080002**	**810800J**	64	8x18x15.5-180°
SK/RS9022 *(Ⓞ : Haldex(DB22) 22.5")*	•	**2912009560**	**2914305390**		430	247.6x30x105	**569000J**		29120	4x29120					
	•	**2912009560**	**2914305390**	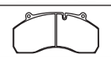	430	247.6x30x105	**569001J**		29120	4x29120					
SKRS9037	•		**1949003290**		367	200x20.6/13.8x190 200x20.6/13.8x192			19490 19491	4x19490 + 4x19491	4xSJ/34/1 + 4xSJ/35/1	**8103080005**	**810800J**	64	8x18x15.5-180°
SNK	•		**1928394040**		420	180x19.6/16.4x189 180x19.0/12.0x194			19283 19284	4x19283 + 4x19284	4xSJ/28/1 + 4xSJ/29/1	**8103080005**	**810800J**	64	8x18x15.5-180°
	•		**1947703290**		419	203x18.4/15.3x189 203x18.8/11.9x195			19477 19478	4x19477 + 4x19478	4xSJ/30/1 + 4xSJ/31/1	**8103080005**	**810800J**	64	8x18x15.5-180°
SN	•		**1951704040**		300	150x15.5/7.7x129 150x15.5/12.2x132			19517 19518	4x19517 + 4x19518	4xSJ/25/1 + 4xSJ/24/1	**8162080001**	**810800J**	64	8x15x15.5-180°
WEZ 10030, WEZ 6030, WEZ 8030	•		**1910304040**		300	200x10.0x141			19103	8x19103	8xBC/55/1	**8162080001**	**810800J**	64	8x15x15.5-180°
WRZ8130	•		**1951504040**		300	200x16.0/8.2x129 200x16.0/12.7x132			19515 19516	4x19515 + 4x19516	4xSJ/23/1 + 4xSJ/22/1	**8162080001**	**810800J**	64	8x15x15.5-180°
Ⓞ : Wabco *(PAN19)* **19.5"**	•	**2912605399**	**2915905399**	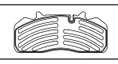	377	210.5x30x92	**569002J**		29126	4x29126					
	•	**2912605399**	**2915905399**		375	210.5x30x92	**569109J**		29126	4x29126					
	•		**1737704040**		420	120x18.0/11.2x204			17377	8x17377	8xBC/78/1	**8162080001**	**810800J**	80	8x15x15.5-180°
	•		**1989204040** **1989209550**		355	200x18.2/8.9x160 200x18.3/14.1x169			19892 19893	4x19892 + 4x19893	4xSJ/26/1 + 4xSJ/27/1	**8162080002**	**810800J**	80	8x18x15.5-180°
	•		**1991203290**		355	150x18.3/9.4x160 150x19.2/14.6x169			19912 19913	4x19912 + 4x19913	4xLZ/5/1 + 4xLZ/4/1	**8162080002**	**810800J**	80	8x18x15.5-180°
Ⓞ : Knorr *(SB 6000)* **19.5"**	•		**2909305390**	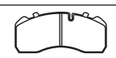		210.7x30x92.5			29093	4x29093					
Ⓞ : Knorr *(SB 7000)* **22.5"**	•		**2910815390**	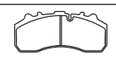	430	248x30x109			29108	4x29108					
Ⓞ : Knorr *(NA7)* **22.5"**	•		**2915805390**			210.8x30x108			29158	4x29158					
Ⓞ : Wabco *(PAN22-1)* **22.5"**	•		**2916205399**			210.45x31x109.6			29162	4x29162					

© JURID / All rights reserved 2005

© JURID / All rights reserved 2005

								WVA	BFMC		JURID	SUPASET	#	
			→STOCK	STOCK→	∅ mm									

Samro

⊢⊣ : ROR	•	1903609552	1903604042 1903601232	419	178x18.6/16.7x188 178x18.2/11.5x194		19036 19037	4x19036 + 4x19037	4xIL/66/3 + 4xIL/67/3	8158057001	810635J	96	6.35x15.88x11.9-150°(L10/10-10)
⊢⊣ : ROR 15"	•	1960409550	1960403290 1960401230	311	190x15.3/10.8x126 190x16.1/13.1x158		19604 19605	4x19604 + 4x19605	4xRW/9/2 + 4xRW/13/2	8158057001	810635J	80	6.35x15.88x11.9-150°(L10/10-10)
⊢⊣ : ROR	•	1990809550	1990803290 1990801230	350	200x18.0/11.0x165 200x18.8/15.5x168		19908 19909	4x19908 + 4x19909	4xRW/22/1 + 4xRW/21/1	8158057001	810635J	80	6.35x15.88x11.9-150°(L10/10-10)
	•		1936504042 1936509582 1936509552	419	203x18.2/11.5x194 203x18.6/15.7x188		19365 19366	4x19365 + 4x19366	4xRW/2/5 + 4xRW/1/5	8158057001	810635J	128	6.35x15.88x11.9-150°(L10/10-10)
	•		1936904040	419	219x18.5/10.5x196 219x18.6/15.2x190		19369 19370	4x19369 + 4x19370	4xFU/4/2 + 4xFU/5/2	8158057001	810635J	96	6.35x15.88x11.9-150°(L10/10-10)

Sanos

415DL, 426	•		1970605380 1957909580	410	163x17.9/8.0x219 163x18.0/15.4x174 163x19x173.66		19579 19580 19706	4x19579 + 2x19580 + 2x19706	4xMB/75/1 + 2xMB/74/1 + 2xMB/74/2	8162080002	810800J	72	8x18x15.5-180°
	•		1963205450	410	180x18.0/15.4x188 180x17.9/8.2x236		19632 19633	4x19632 + 4x19633	4xMB/85/1 + 4xMB/84/1	8162080002	810800J	64	8x18x15.5-180°

Saurer

D180, D230, D250, D290, D330 *(4 DF,4 VF,5 DF)*	•		1734005380	400	140x10.1x331		17340	4x17340	4xBC/77/1	8103080003	810800J	48	8x15x15.5-180°
	•		1907605380 1907605450 1955809530	410	180x16.1/13.8x211 180x16.0/9.0x211		19076 19559	4x19076 + 4x19559	4xPB/11/2 + 4xPB/12/1	8103100002	811000J	64	10x18x18-180°

Sava

5702, 5740, 5741, FGK60, S217, S304, S311, S315, S350, S415, S515, S78, SH250 S400*(A/B,E,F)* S301*(E,F)*	•		1585409530	306	76x6.5x255		15854	4x15854	4xAT/32	8102040003	810400J	48	4x10x7.5-180°
5702, 5740, 5741, S217, S315, S415, S515 S703*(Tm)* S400*(E)*	•		1558005460	300	98x10.2x244 98x10.2x286		15580 15581	2x15580 + 2x15581	2xMB/94/1 + 2xMB/95/1	8103060003	810600J	52	6x12x11.5-180°
5721, FGK60, S211, S212, S213, S213/1, S213/2, S215, S221, S304, S311, S350, S78, SH250, SSK200 S400*(A/B,E,F)* S301*(E,F)*	•		1327909530	305	57.1x6.3x258		13279	4x13279	4xGG/70/1	8102040003	810400J	48	4x10x7.5-180°

JURID by Honeywell
© JURID / All rights reserved 2005
© JURID / All rights reserved 2005
JURID by Honeywell

				→STOCK	STOCK→	∅ mm				WVA	BFMC	JURID	SUPASET	#	

Sava...

...

J4	82-	•	•		**571368J**		166.5x17x62		20706 20947	2x20706 + 2x20947					
S703 *(Tm)*			•		**1569803320**	305	80x7.5x292		15698	4x15698	4xSA/14/1	**8103040002**	**810400J**	48	4x8x7.5-180°

Scammel

Contractor	79-	•			**1974503270**	394	203x18.2/11.8x160		19745	8x19745	8xCS/64/1	**8158056001**	**810635J**	96	6.35x14.29x11.9-150°(L9/10-9)
	79-		•		**1947703290**	419	203x18.4/15.3x189 203x18.8/11.9x195		19477 19478	4x19477 + 4x19478	4xSJ/30/1 + 4xSJ/31/1	**8103080005**	**810800J**	64	8x18x15.5-180°
Routeman3 *(28t)*	74-	•			**1907203320** **1907209530**	394	152x12.7x362		19072	4x19072	4xGG/83/1	**8158056001**	**810635J**	48	6.35x14.29x11.9-150°(L9/10-9)

151 *(2"x6")*			•		**1907203320** **1907209530**	394	152x12.7x362		19072	4x19072	4xGG/83/1	**8158056001**	**810635J**	48	6.35x14.29x11.9-150°(L9/10-9)
161 *(2"x7")*			•	**1903609550**	**1903604040** **1903601230**	419	178x19.0/16.0x189 178x18.2/11.5x194		19036 19037	4x19036 + 4x19037	4xRW/5/4 + 4xRW/6/4	**8103050014**	**810500J**	96	5x16x12-180°
161 *(2"x8.6")*			•		**1936904040**	419	219x18.5/10.5x196 219x18.6/15.2x190		19369 19370	4x19369 + 4x19370	4xFU/4/2 + 4xFU/5/2	**8158057001**	**810635J**	96	6.35x15.88x11.9-150°(L10/10-10)

Scania

	08/88-		•	**1993101820** **1993109580** **1993109530**	**1993101230** **1993101230** **1993101230**	413	178x19.1x235		19931	4x19931	4xSV/40/2	**8130074001**		64	6.35x18x11.5-180°(AM)
	08/88-		•	**1993201820** **1993209580** **1993209530**	**1993201230** **1993201230**	413	203x19.1x235		19932	4x19932	4xSV/41/2	**8130074001**		64	6.35x18x11.5-180°(AM)
	08/88-		•	**1993309580** **1993309530**	**1993301230** **1993301230**	413	254x19.1x235		19933	4x19933	4xSV/42/2	**8130074001**		64	6.35x18x11.5-180°(AM)
	08/88-		•		**1799101820**	413	127x19.1x235		17991	4x17991	4xSV/39/2	**8130074001**		32	6.35x18x11.5-180°(AM)
	-07/88		•	**1716109580** **1716109530**	**1716101230** **1716101230**	413	127x19.1x193		17161	8x17161	8xSV/26/1	**8130074001**		64	6.35x18x11.5-180°(AM)
	-07/88		•	**1964709580** **1964709530**	**1964701230** **1964701230**	413	254x19.0x193		19647	8x19647	8xSV/34/1	**8130074001**		96	6.35x18x11.5-180°(AM)
	-07/88		•	**1907509580** **1907509530**	**1907501820** **1907501230** **1907501230**	413	178x19.1x192		19075	8x19075	8xSV/8/1	**8130074001**		96	6.35x18x11.5-180°(AM)
	-07/88		•	**1939309580** **1939309530**	**1939303270** **1939301230** **1939301230**	413	203x19.1x192		19393	8x19393	8xSV/27/1	**8130074001**		96	6.35x18x11.5-180°(AM)

JURID by Honeywell
© JURID / All rights reserved 2005
© JURID / All rights reserved 2005
JURID by Honeywell

Scania...

L

164 *(O : Knorr(SB 7000))*	05/00-	•		**2910815390**		430	248x30x109	**567500J**		29108	4x29108			
	05/00-		•	**2910815390**		430	248x30x109	**567500J**		29108	4x29108			

S 1

110, 111, 140, 141, 146, 81, 86 *(LB,LBS,LBT,LS,LT)*	75-80	•	**1716109580** **1716109530**	**1716101230** **1716101230**		413	127x19.1x193			17161	8x17161	8xSV/26/1	**8130074001**	64	6.35x18x11.5-180°(AM)
	75-80		•	**1716109580** **1716109530**	**1716101230** **1716101230**		413	127x19.1x193			17161	8x17161	8xSV/26/1	**8130074001**	64	6.35x18x11.5-180°(AM)
	75-80		•	**1939309580** **1939309530**	**1939303270** **1939301230** **1939301230**		413	203x19.1x192			19393	8x19393	8xSV/27/1	**8130074001**	96	6.35x18x11.5-180°(AM)
110, 111, 140, 141, 146, 81, 86 *(LB ⟷ : trilex,LBS ⟷ : trilex, LBT ⟷ : trilex,LS ⟷ : trilex, LT ⟷ : trilex)*	75-80	•	**1907509580** **1907509530**	**1907501820** **1907501230** **1907501230**		413	178x19.1x192			19075	8x19075	8xSV/8/1	**8130074001**	96	6.35x18x11.5-180°(AM)
140 *(LB,LBT)*	70-72	•	**1907509580** **1907509530**	**1907501820** **1907501230** **1907501230**		413	178x19.1x192			19075	8x19075	8xSV/8/1	**8130074001**	96	6.35x18x11.5-180°(AM)
	70-72		•	**1939309580** **1939309530**	**1939303270** **1939301230** **1939301230**		413	203x19.1x192			19393	8x19393	8xSV/27/1	**8130074001**	96	6.35x18x11.5-180°(AM)
L80, L81, L81S	69-77	•	**1716109580** **1716109530**	**1716101230** **1716101230**		413	127x19.1x193			17161	8x17161	8xSV/26/1	**8130074001**	64	6.35x18x11.5-180°(AM)
	69-77		•	**1907509580** **1907509530**	**1907501820** **1907501230** **1907501230**		413	178x19.1x192			19075	8x19075	8xSV/8/1	**8130074001**	96	6.35x18x11.5-180°(AM)

S 2 G

82 *(M Trilex)* **112, 142, 92** *(M)*	81-88	•	**1716109580** **1716109530**	**1716101230** **1716101230**		413	127x19.1x193			17161	8x17161	8xSV/26/1	**8130074001**	64	6.35x18x11.5-180°(AM)
142, 82, 92 *(AM 55,AM 60)* **112** *(AM 55,AM 60,CN)*	81-88	•	**1907509580** **1907509530**	**1907501820** **1907501230** **1907501230**		413	178x19.1x192			19075	8x19075	8xSV/8/1	**8130074001**	96	6.35x18x11.5-180°(AM)
112 *(AS 90,H)* **82, 92** *(AS 90 6x2,H 6x2)* **142** *(AS 90)*	81-88	•	**1716109580** **1716109530**	**1716101230** **1716101230**		413	127x19.1x193			17161	8x17161	8xSV/26/1	**8130074001**	64	6.35x18x11.5-180°(AM)
112, 142, 82, 92 *(+ABS)*	81-88	•	**1964709580** **1964709530**	**1964701230** **1964701230**		413	254x19.0x193			19647	8x19647	8xSV/34/1	**8130074001**	96	6.35x18x11.5-180°(AM)
142 *(M Trilex)* **112, 92** *(ARA 55,ASA 70)* **82** *(ASA 70)*	81-88	•	**1907509580** **1907509530**	**1907501820** **1907501230** **1907501230**		413	178x19.1x192			19075	8x19075	8xSV/8/1	**8130074001**	96	6.35x18x11.5-180°(AM)
112, 142, 82, 92	81-88	•	**1939309580** **1939309530**	**1939303270** **1939301230** **1939301230**		413	203x19.1x192			19393	8x19393	8xSV/27/1	**8130074001**	96	6.35x18x11.5-180°(AM)

S 2 P

82 *(M Trilex)* **112, 142, 92** *(M)*	81-88	•	**1716109580** **1716109530**	**1716101230** **1716101230**		413	127x19.1x193			17161	8x17161	8xSV/26/1	**8130074001**	64	6.35x18x11.5-180°(AM)
142, 82, 92 *(AM 55,AM 60)* **112** *(AM 55,AM 60,CN)*	81-88	•	**1907509580** **1907509530**	**1907501820** **1907501230** **1907501230**		413	178x19.1x192			19075	8x19075	8xSV/8/1	**8130074001**	96	6.35x18x11.5-180°(AM)

© JURID / All rights reserved 2005

© JURID / All rights reserved 2005

			STOCK	STOCK	⌀ mm			WVA	BFMC	JURID	SUPASET	#	

Scania...

...

S 2 P...

112(AS 90,H) **82, 92**(AS 90 6x2,H 6x2) **142**(AS 90)	81-88	•	**1716109580** **1716109530**	**1716101230** **1716101230**	413	127x19.1x193		17161	8x17161	8xSV/26/1	**8130074001**	64	6.35x18x11.5-180°(AM)
112, 142, 82, 92(+ABS)	81-88	•	**1964709580** **1964709530**	**1964701230** **1964701230**	413	254x19.0x193		19647	8x19647	8xSV/34/1	**8130074001**	96	6.35x18x11.5-180°(AM)
142(M Trilex) **112, 92**(ARA 55,ASA 70) **82**(ASA 70)	81-88	•	**1907509580** **1907509530**	**1907501820** **1907501230** **1907501230**	413	178x19.1x192		19075	8x19075	8xSV/8/1	**8130074001**	96	6.35x18x11.5-180°(AM)
112, 142, 82, 92	81-88	•	**1939309580** **1939309530**	**1939303270** **1939301230** **1939301230**	413	203x19.1x192		19393	8x19393	8xSV/27/1	**8130074001**	96	6.35x18x11.5-180°(AM)

S 2 R

82(M Trilex) **112, 142, 92**(M)	81-88	•	**1716109580** **1716109530**	**1716101230** **1716101230**	413	127x19.1x193		17161	8x17161	8xSV/26/1	**8130074001**	64	6.35x18x11.5-180°(AM)
142, 82, 92(AM 55,AM 60) **112**(AM 55,AM 60,CN)	81-88	•	**1907509580** **1907509530**	**1907501820** **1907501230** **1907501230**	413	178x19.1x192		19075	8x19075	8xSV/8/1	**8130074001**	96	6.35x18x11.5-180°(AM)
112(AS 90,H) **82, 92**(AS 90 6x2,H 6x2) **142**(AS 90)	81-88	•	**1716109580** **1716109530**	**1716101230** **1716101230**	413	127x19.1x193		17161	8x17161	8xSV/26/1	**8130074001**	64	6.35x18x11.5-180°(AM)
112, 142, 82, 92(+ABS)	81-88	•	**1964709580** **1964709530**	**1964701230** **1964701230**	413	254x19.0x193		19647	8x19647	8xSV/34/1	**8130074001**	96	6.35x18x11.5-180°(AM)
142(M Trilex) **112, 92**(ARA 55,ASA 70) **82**(ASA 70)	81-88	•	**1907509580** **1907509530**	**1907501820** **1907501230** **1907501230**	413	178x19.1x192		19075	8x19075	8xSV/8/1	**8130074001**	96	6.35x18x11.5-180°(AM)
112, 142, 82, 92	81-88	•	**1939309580** **1939309530**	**1939303270** **1939301230** **1939301230**	413	203x19.1x192		19393	8x19393	8xSV/27/1	**8130074001**	96	6.35x18x11.5-180°(AM)

S 2 T

82(M Trilex) **112, 142, 92**(M)	81-88	•	**1716109580** **1716109530**	**1716101230** **1716101230**	413	127x19.1x193		17161	8x17161	8xSV/26/1	**8130074001**	64	6.35x18x11.5-180°(AM)
142, 82, 92(AM 55,AM 60) **112**(AM 55,AM 60,CN)	81-88	•	**1907509580** **1907509530**	**1907501820** **1907501230** **1907501230**	413	178x19.1x192		19075	8x19075	8xSV/8/1	**8130074001**	96	6.35x18x11.5-180°(AM)
112(AS 90,H) **82, 92**(AS 90 6x2,H 6x2) **142**(AS 90)	81-88	•	**1716109580** **1716109530**	**1716101230** **1716101230**	413	127x19.1x193		17161	8x17161	8xSV/26/1	**8130074001**	64	6.35x18x11.5-180°(AM)
112, 142, 82, 92(+ABS)	81-88	•	**1964709580** **1964709530**	**1964701230** **1964701230**	413	254x19.0x193		19647	8x19647	8xSV/34/1	**8130074001**	96	6.35x18x11.5-180°(AM)
142(M Trilex) **112, 92**(ARA 55,ASA 70) **82**(ASA 70)	81-88	•	**1907509580** **1907509530**	**1907501820** **1907501230** **1907501230**	413	178x19.1x192		19075	8x19075	8xSV/8/1	**8130074001**	96	6.35x18x11.5-180°(AM)
112, 142, 82, 92	81-88	•	**1939309580** **1939309530**	**1939303270** **1939301230** **1939301230**	413	203x19.1x192		19393	8x19393	8xSV/27/1	**8130074001**	96	6.35x18x11.5-180°(AM)

© JURID / All rights reserved 2005

© JURID / All rights reserved 2005

Scania...

			STOCK	STOCK	⌀ mm			WVA	BFMC	JURID	SUPASET	#	
S 3 G													
113 *(LTB Trilex)*	88-96	•	**1907509580** **1907509530**	**1907501820** **1907501230** **1907501230**	413	178x19.1x192		19075	8x19075	8xSV/8/1	**8130074001**	96	6.35x18x11.5-180°(AM)
113 *(AM 70 8x4,EL 8x4)* **143** *(AM 70)*	88-96	•	**1939309580** **1939309530**	**1939303270** **1939301230** **1939301230**	413	203x19.1x192		19393	8x19393	8xSV/27/1	**8130074001**	96	6.35x18x11.5-180°(AM)
113, 93 **143** *(AM 56,AM 61)*	88-96	•	**1993101820** **1993109580** **1993109530**	**1993101230** **1993101230** **1993101230**	413	178x19.1x235		19931	4x19931	4xSV/40/2	**8130074001**	64	6.35x18x11.5-180°(AM)
113, 143, 93 *(+ABS)*	88-96	•	**1964709580** **1964709530**	**1964701230** **1964701230**	413	254x19.0x193		19647	8x19647	8xSV/34/1	**8130074001**	96	6.35x18x11.5-180°(AM)
113, 93 **143** *(6x2)*	88-96	•	**1993101820** **1993109580** **1993109530**	**1993101230** **1993101230** **1993101230**	413	178x19.1x235		19931	4x19931	4xSV/40/2	**8130074001**	64	6.35x18x11.5-180°(AM)
113, 143, 93	88-96	•	**1939309580** **1939309530**	**1939303270** **1939301230** **1939301230**	413	203x19.1x192		19393	8x19393	8xSV/27/1	**8130074001**	96	6.35x18x11.5-180°(AM)
	88-96	•		**1799101820**	413	127x19.1x235		17991	4x17991	4xSV/39/2	**8130074001**	32	6.35x18x11.5-180°(AM)
93	88-96	•		**1799101820**	413	127x19.1x235		17991	4x17991	4xSV/39/2	**8130074001**	32	6.35x18x11.5-180°(AM)
S 3 P													
113 *(LTB Trilex)*	88-96	•	**1907509580** **1907509530**	**1907501820** **1907501230** **1907501230**	413	178x19.1x192		19075	8x19075	8xSV/8/1	**8130074001**	96	6.35x18x11.5-180°(AM)
113 *(AM 70 8x4,EL 8x4)* **143** *(AM 70)*	88-96	•	**1939309580** **1939309530**	**1939303270** **1939301230** **1939301230**	413	203x19.1x192		19393	8x19393	8xSV/27/1	**8130074001**	96	6.35x18x11.5-180°(AM)
113, 93 **143** *(AM 56,AM 61)*	88-96	•	**1993101820** **1993109580** **1993109530**	**1993101230** **1993101230** **1993101230**	413	178x19.1x235		19931	4x19931	4xSV/40/2	**8130074001**	64	6.35x18x11.5-180°(AM)
113, 143, 93 *(+ABS)*	88-96	•	**1964709580** **1964709530**	**1964701230** **1964701230**	413	254x19.0x193		19647	8x19647	8xSV/34/1	**8130074001**	96	6.35x18x11.5-180°(AM)
113, 93 **143** *(6x2)*	88-96	•	**1993101820** **1993109580** **1993109530**	**1993101230** **1993101230** **1993101230**	413	178x19.1x235		19931	4x19931	4xSV/40/2	**8130074001**	64	6.35x18x11.5-180°(AM)
113, 143, 93	88-96	•	**1939309580** **1939309530**	**1939303270** **1939301230** **1939301230**	413	203x19.1x192		19393	8x19393	8xSV/27/1	**8130074001**	96	6.35x18x11.5-180°(AM)
	88-96	•		**1799101820**	413	127x19.1x235		17991	4x17991	4xSV/39/2	**8130074001**	32	6.35x18x11.5-180°(AM)
93	88-96	•		**1799101820**	413	127x19.1x235		17991	4x17991	4xSV/39/2	**8130074001**	32	6.35x18x11.5-180°(AM)
S 3 R													
113 *(LTB Trilex)*	88-96	•	**1907509580** **1907509530**	**1907501820** **1907501230** **1907501230**	413	178x19.1x192		19075	8x19075	8xSV/8/1	**8130074001**	96	6.35x18x11.5-180°(AM)
113 *(AM 70 8x4,EL 8x4)* **143** *(AM 70)*	88-96	•	**1939309580** **1939309530**	**1939303270** **1939301230** **1939301230**	413	203x19.1x192		19393	8x19393	8xSV/27/1	**8130074001**	96	6.35x18x11.5-180°(AM)
113, 93 **143** *(AM 56,AM 61)*	88-96	•	**1993101820** **1993109580** **1993109530**	**1993101230** **1993101230** **1993101230**	413	178x19.1x235		19931	4x19931	4xSV/40/2	**8130074001**	64	6.35x18x11.5-180°(AM)
113, 143, 93 *(+ABS)*	88-96	•	**1964709580** **1964709530**	**1964701230** **1964701230**	413	254x19.0x193		19647	8x19647	8xSV/34/1	**8130074001**	96	6.35x18x11.5-180°(AM)
113, 93 **143** *(6x2)*	88-96	•	**1993101820** **1993109580** **1993109530**	**1993101230** **1993101230** **1993101230**	413	178x19.1x235		19931	4x19931	4xSV/40/2	**8130074001**	64	6.35x18x11.5-180°(AM)

© JURID / All rights reserved 2005

© JURID / All rights reserved 2005

Scania...

S 3 R...

113, 143, 93	88-96	•	**1939309580** **1939309530**	**1939303270** **1939301230** **1939301230**	413	203x19.1x192		19393	8x19393	8xSV/27/1	**8130074001**	96	6.35x18x11.5-180°(AM)
	88-96	•		**1799101820**	413	127x19.1x235		17991	4x17991	4xSV/39/2	**8130074001**	32	6.35x18x11.5-180°(AM)
93	88-96	•		**1799101820**	413	127x19.1x235		17991	4x17991	4xSV/39/2	**8130074001**	32	6.35x18x11.5-180°(AM)

S 3 T

113*(LTB Trilex)*	88-96	•	**1907509580** **1907509530**	**1907501820** **1907501230** **1907501230**	413	178x19.1x192		19075	8x19075	8xSV/8/1	**8130074001**	96	6.35x18x11.5-180°(AM)
113*(AM 70 8x4,EL 8x4)* **143***(AM 70)*	88-96	•	**1939309580** **1939309530**	**1939303270** **1939301230** **1939301230**	413	203x19.1x192		19393	8x19393	8xSV/27/1	**8130074001**	96	6.35x18x11.5-180°(AM)
113, 93 **143***(AM 56,AM 61)*	88-96	•	**1993101820** **1993109580** **1993109530**	**1993101230** **1993101230** **1993101230**	413	178x19.1x235		19931	4x19931	4xSV/40/2	**8130074001**	64	6.35x18x11.5-180°(AM)
113, 143, 93*(+ABS)*	88-96	•	**1964709580** **1964709530**	**1964701230** **1964701230**	413	254x19.0x193		19647	8x19647	8xSV/34/1	**8130074001**	96	6.35x18x11.5-180°(AM)
113, 93 **143***(6x2)*	88-96	•	**1993101820** **1993109580** **1993109530**	**1993101230** **1993101230** **1993101230**	413	178x19.1x235		19931	4x19931	4xSV/40/2	**8130074001**	64	6.35x18x11.5-180°(AM)
113, 143, 93	88-96	•	**1939309580** **1939309530**	**1939303270** **1939301230** **1939301230**	413	203x19.1x192		19393	8x19393	8xSV/27/1	**8130074001**	96	6.35x18x11.5-180°(AM)
	88-96	•		**1799101820**	413	127x19.1x235		17991	4x17991	4xSV/39/2	**8130074001**	32	6.35x18x11.5-180°(AM)
93	88-96	•		**1799101820**	413	127x19.1x235		17991	4x17991	4xSV/39/2	**8130074001**	32	6.35x18x11.5-180°(AM)

S 4 P

114, 124, 144, 94	96-	• •	**1993201820** **1993209580** **1993209530**	**1993201230** **1993201230**	413	203x19.1x235		19932	4x19932	4xSV/41/2	**8130074001**	64	6.35x18x11.5-180°(AM)
	96-	• •		**2910815390**	430	248x30x109	**567500J**	29108	4x29108				
	96-	•	**1993101820** **1993109580** **1993109530**	**1993101230** **1993101230** **1993101230**	413	178x19.1x235		19931	4x19931	4xSV/40/2	**8130074001**	64	6.35x18x11.5-180°(AM)
	96-	•	**1993101820** **1993109580** **1993109530**	**1993101230** **1993101230** **1993101230**	413	178x19.1x235		19931	4x19931	4xSV/40/2	**8130074001**	64	6.35x18x11.5-180°(AM)
	96-	•	**1993201820** **1993209580** **1993209530**	**1993201230** **1993201230**	413	203x19.1x235		19932	4x19932	4xSV/41/2	**8130074001**	64	6.35x18x11.5-180°(AM)
114, 124, 144, 94*(+ABS)*	96-	•	**1993309580** **1993309530**	**1993301230** **1993301230**	413	254x19.1x235		19933	4x19933	4xSV/42/2	**8130074001**	64	6.35x18x11.5-180°(AM)
114, 124, 144, 94*(6x2/4)*	96-	•		**1799101820**	413	127x19.1x235		17991	4x17991	4xSV/39/2	**8130074001**	32	6.35x18x11.5-180°(AM)

JURID by Honeywell
© JURID / All rights reserved 2005
© JURID / All rights reserved 2005
JURID by Honeywell

Scania...

S 4 R

114, 124, 144, 94	96-	•	•	**1993201820** **1993209580** **1993209530**	**1993201230** **1993201230**		413	203x19.1x235			19932	4x19932	4xSV/41/2	**8130074001**	64	6.35x18x11.5-180°(AM)
	96-	•	•		**2910815390**	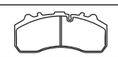	430	248x30x109	**567500J**		29108	4x29108				
	96-	•		**1993101820** **1993109580** **1993109530**	**1993101230** **1993101230** **1993101230**		413	178x19.1x235			19931	4x19931	4xSV/40/2	**8130074001**	64	6.35x18x11.5-180°(AM)
	96-		•	**1993101820** **1993109580** **1993109530**	**1993101230** **1993101230** **1993101230**		413	178x19.1x235			19931	4x19931	4xSV/40/2	**8130074001**	64	6.35x18x11.5-180°(AM)
	96-		•	**1993201820** **1993209580** **1993209530**	**1993201230** **1993201230**		413	203x19.1x235			19932	4x19932	4xSV/41/2	**8130074001**	64	6.35x18x11.5-180°(AM)
114, 124, 144, 94*(+ABS)*	96-		•	**1993309580** **1993309530**	**1993301230** **1993301230**		413	254x19.1x235			19933	4x19933	4xSV/42/2	**8130074001**	64	6.35x18x11.5-180°(AM)
114, 124, 144, 94*(6x2/4)*	96-		•		**1799101820**		413	127x19.1x235			17991	4x17991	4xSV/39/2	**8130074001**	32	6.35x18x11.5-180°(AM)

S 4 T

114, 124, 144, 94	96-	•	•	**1993201820** **1993209580** **1993209530**	**1993201230** **1993201230**		413	203x19.1x235			19932	4x19932	4xSV/41/2	**8130074001**	64	6.35x18x11.5-180°(AM)
	96-	•	•		**2910815390**	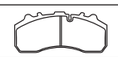	430	248x30x109	**567500J**		29108	4x29108				
	96-	•		**1993101820** **1993109580** **1993109530**	**1993101230** **1993101230** **1993101230**		413	178x19.1x235			19931	4x19931	4xSV/40/2	**8130074001**	64	6.35x18x11.5-180°(AM)
	96-		•	**1993101820** **1993109580** **1993109530**	**1993101230** **1993101230** **1993101230**		413	178x19.1x235			19931	4x19931	4xSV/40/2	**8130074001**	64	6.35x18x11.5-180°(AM)
	96-		•	**1993201820** **1993209580** **1993209530**	**1993201230** **1993201230**		413	203x19.1x235			19932	4x19932	4xSV/41/2	**8130074001**	64	6.35x18x11.5-180°(AM)
114, 124, 144, 94*(+ABS)*	96-		•	**1993309580** **1993309530**	**1993301230** **1993301230**		413	254x19.1x235			19933	4x19933	4xSV/42/2	**8130074001**	64	6.35x18x11.5-180°(AM)
114, 124, 144, 94*(6x2/4)*	96-		•		**1799101820**		413	127x19.1x235			17991	4x17991	4xSV/39/2	**8130074001**	32	6.35x18x11.5-180°(AM)

Serie R

380, 420, 470, 500, 580 *(Ⓞ : Knorr(SB 7000))*	04-	•	•		**2910815390**			248x30x109			29108	4x29108				

112*(F,K,S)*	82-88	•		**1907509580**	**1907501820**		413	178x19.1x192			19075	8x19075	8xSV/8/1	**8130074001**	96	6.35x18x11.5-180°(AM)
	82-88		•	**1716109580**			413	127x19.1x193			17161	8x17161	8xSV/26/1	**8130074001**	64	6.35x18x11.5-180°(AM)
	82-88		•	**1964709580** **1964709530**			413	254x19.0x193			19647	8x19647	8xSV/34/1	**8130074001**	96	6.35x18x11.5-180°(AM)
	82-88		•	**1939309580** **1939309530**	**1939303270**		413	203x19.1x192			19393	8x19393	8xSV/27/1	**8130074001**	96	6.35x18x11.5-180°(AM)
CN112, CR112, N112AL, N112CLB **113CN, 113CR, 93CN, 93CR***(K)*	88-	•		**1993109580**	**1993105450**		413	178x19.1x235			19931	4x19931	4xSV/40/2	**8130074001**	64	6.35x18x11.5-180°(AM)

© JURID / All rights reserved 2005

© JURID / All rights reserved 2005

				STOCK	STOCK	⌀ mm				WVA	BFMC	JURID	SUPASET	#			

Scania...

...

N112AL, N112CLB, N113CRB, N113DRB **CN112, CR112***(+ABS)* **113CN, 113CR, 93CN, 93CR***(K)*	88-		•	**1993309580**	**1993305450**	413	254x19.1x235			19933	4x19933	4xSV/42/2	**8130074001**	64	6.35x18x11.5-180°(AM)
50*(Metropol)*		•	•	**1716109580**		413	127x19.1x193			17161	8x17161	8xSV/26/1	**8130074001**	64	6.35x18x11.5-180°(AM)
82, 92CR*(F,K,S)*	82-	•		**1907509580**	**1907501820**	413	178x19.1x192			19075	8x19075	8xSV/8/1	**8130074001**	96	6.35x18x11.5-180°(AM)
82, 92CR*(F +ABS,K +ABS,S +ABS)*	82-		•	**1964709580** **1964709530**		413	254x19.0x193			19647	8x19647	8xSV/34/1	**8130074001**	96	6.35x18x11.5-180°(AM)
82, 92CR*(F,K,S)*	82-		•	**1939309580** **1939309530**	**1939303270**	413	203x19.1x192			19393	8x19393	8xSV/27/1	**8130074001**	96	6.35x18x11.5-180°(AM)
B110, B111, B145, B70, B85	63-76	•		**1716109580**		413	127x19.1x193			17161	8x17161	8xSV/26/1	**8130074001**	64	6.35x18x11.5-180°(AM)
	63-76		•	**1939309580**	**1939303270**	413	203x19.1x192			19393	8x19393	8xSV/27/1	**8130074001**	96	6.35x18x11.5-180°(AM)
B56, B65, B66, B73, B75, B76, B80, B86	63-77	•		**1716109580**		413	127x19.1x193			17161	8x17161	8xSV/26/1	**8130074001**	64	6.35x18x11.5-180°(AM)
	63-77		•	**1907509580**	**1907501820**	413	178x19.1x192			19075	8x19075	8xSV/8/1	**8130074001**	96	6.35x18x11.5-180°(AM)
BR111, BR112	74-	•		**1716109580**		413	127x19.1x193			17161	8x17161	8xSV/26/1	**8130074001**	64	6.35x18x11.5-180°(AM)
	74-		•	**1964709580** **1964709530**		413	254x19.0x193			19647	8x19647	8xSV/34/1	**8130074001**	96	6.35x18x11.5-180°(AM)
BR112A	78-	•		**1716109580**		413	127x19.1x193			17161	8x17161	8xSV/26/1	**8130074001**	64	6.35x18x11.5-180°(AM)
	78-	•		**1907509580**	**1907501820**	413	178x19.1x192			19075	8x19075	8xSV/8/1	**8130074001**	96	6.35x18x11.5-180°(AM)
BR112A*(+ABS)*	78-		•	**1964709580** **1964709530**		413	254x19.0x193			19647	8x19647	8xSV/34/1	**8130074001**	96	6.35x18x11.5-180°(AM)
BR112A	78-		•	**1939309580**	**1939303270**	413	203x19.1x192			19393	8x19393	8xSV/27/1	**8130074001**	96	6.35x18x11.5-180°(AM)
BR116, BR86	79-	•		**1716109580**		413	127x19.1x193			17161	8x17161	8xSV/26/1	**8130074001**	64	6.35x18x11.5-180°(AM)
BR116, BR86*(+ABS)*	79-		•	**1964709580** **1964709530**		413	254x19.0x193			19647	8x19647	8xSV/34/1	**8130074001**	96	6.35x18x11.5-180°(AM)
BR116, BR86	79-		•	**1939309580**	**1939303270**	413	203x19.1x192			19393	8x19393	8xSV/27/1	**8130074001**	96	6.35x18x11.5-180°(AM)
CN112, CR112	78-81	•		**1716109580**		413	127x19.1x193			17161	8x17161	8xSV/26/1	**8130074001**	64	6.35x18x11.5-180°(AM)
	81-88	•			**1992500**	413				19925	4x19925	4xSV/40/1			
	81-88		•		**1992709530**	413	254x19.0x235			19927	4x19927	4xSV/42/1	**8130074001**	64	6.35x18x11.5-180°(AM)
N112AL	88-		•	**1993201820** **1993209580**		413	203x19.1x235			19932	4x19932	4xSV/41/2	**8130074001**	64	6.35x18x11.5-180°(AM)
N112AL, N112CLB	87-88	•			**1992500**	413				19925	4x19925	4xSV/40/1			
	87-88		•		**1992709530**	413	254x19.0x235			19927	4x19927	4xSV/42/1	**8130074001**	64	6.35x18x11.5-180°(AM)
Omnicity(○) *: Knorr(SB 7000))*	00-	•	•		**2910815390**	430	248x30x109	**567500J**		29108	4x29108				
(○) **: Knorr** *(SB 7000)* **22.5"**	96-	•	•		**2910815390**	430	248x30x109	**567500J**		29108	4x29108				

Seddon-Atkinson

200

2.11*(4x2)*	86-90	•	•	**1987709580**		410	160x16.6/9.6x162 160x16.6/16.3x162			19877 19878	4x19877 + 4x19878	4xPD/7/1 + 4xPD/8/1	**8103060007**	**810600J**	100	6x15x11.5-180°	

JURID by Honeywell

© JURID / All rights reserved 2005

© JURID / All rights reserved 2005

JURID by Honeywell

S

				→~~STOCK~~	STOCK→	⌀ mm				WVA	BFMC	JURID	SUPASET	#			

Seddon-Atkinson...

...

200...

2.11	90-	•	•	**1993901820** **1993909530**	**1907101230**	410	200x17.9/13.0x178			19071	8 x 19071	8xVL/88/1	**8158056001**	**810635J**	96	6.35x14.29x11.9-150°(L9/10-9)
R16N35B *(4x2)*	75-82	•	•		**1911109530**	394	177.8x12.7x358.4			19111	4x19111	4xGG/92/1	**8158056001**	**810635J**	72	6.35x14.29x11.9-150°(L9/10-9)
R17N13/P16 *(4x2 tractor)*	82-86	•	•		**1911109530**	394	177.8x12.7x358.4			19111	4x19111	4xGG/92/1	**8158056001**	**810635J**	72	6.35x14.29x11.9-150°(L9/10-9)
4x2 14t	75-82	•	•		**1907203320** **1907209530**	394	152x12.7x362			19072	4x19072	4xGG/83/1	**8158056001**	**810635J**	48	6.35x14.29x11.9-150°(L9/10-9)

211

2.11 *(4x2)*	86-90	•	•	**1987709580**		410	160x16.6/9.6x162 160x16.6/16.3x162			19877 19878	4x19877 + 4x19878	4xPD/7/1 + 4xPD/8/1	**8103060007**	**810600J**	100	6x15x11.5-180°
2.11	90-	•	•	**1993901820** **1993909530**	**1907101230**	410	200x17.9/13.0x178			19071	8 x 19071	8xVL/88/1	**8158056001**	**810635J**	96	6.35x14.29x11.9-150°(L9/10-9)
R16N35B *(4x2)*	75-82	•	•		**1911109530**	394	177.8x12.7x358.4			19111	4x19111	4xGG/92/1	**8158056001**	**810635J**	72	6.35x14.29x11.9-150°(L9/10-9)
R17N13/P16 *(4x2 tractor)*	82-86	•	•		**1911109530**	394	177.8x12.7x358.4			19111	4x19111	4xGG/92/1	**8158056001**	**810635J**	72	6.35x14.29x11.9-150°(L9/10-9)
4x2 14t	75-82	•	•		**1907203320** **1907209530**	394	152x12.7x362			19072	4x19072	4xGG/83/1	**8158056001**	**810635J**	48	6.35x14.29x11.9-150°(L9/10-9)

300

3.11 *(4x2,6x2)*	86-88	•		**1987709580**		410	160x16.6/9.6x162 160x16.6/16.3x162			19877 19878	4x19877 + 4x19878	4xPD/7/1 + 4xPD/8/1	**8103060007**	**810600J**	100	6x15x11.5-180°
	86-88		•	**1987909580**	**1987901230**	410	200x16.6/9.6x162 200x16.6/16.3x162			19879 19881	4x19879 + 4x19881	4xPD/3/1 + 4xPD/4/1	**8103060007**	**810600J**	96	6x15x11.5-180°
R30M466 *(8x4)*	79-81		•	**1903609552**	**1903604042** **1903601232**	419	178x18.6/16.7x188 178x18.2/11.5x194			19036 19037	4x19036 + 4x19037	4xIL/66/3 + 4xIL/67/3	**8158057001**	**810635J**	96	6.35x15.88x11.9-150°(L10/10-10)

311

3.11 *(4x2,6x2)*	86-88	•		**1987709580**		410	160x16.6/9.6x162 160x16.6/16.3x162			19877 19878	4x19877 + 4x19878	4xPD/7/1 + 4xPD/8/1	**8103060007**	**810600J**	100	6x15x11.5-180°
	86-88		•	**1987909580**	**1987901230**	410	200x16.6/9.6x162 200x16.6/16.3x162			19879 19881	4x19879 + 4x19881	4xPD/3/1 + 4xPD/4/1	**8103060007**	**810600J**	96	6x15x11.5-180°
R30M466 *(8x4)*	79-81		•	**1903609552**	**1903604042** **1903601232**	419	178x18.6/16.7x188 178x18.2/11.5x194			19036 19037	4x19036 + 4x19037	4xIL/66/3 + 4xIL/67/3	**8158057001**	**810635J**	96	6.35x15.88x11.9-150°(L10/10-10)

400

4.11 *(4x2 tractor,6x2 tractor)*	86-88	•		**1987709580**		410	160x16.6/9.6x162 160x16.6/16.3x162			19877 19878	4x19877 + 4x19878	4xPD/7/1 + 4xPD/8/1	**8103060007**	**810600J**	100	6x15x11.5-180°
	86-88		•	**1987909580**	**1987901230**	410	200x16.6/9.6x162 200x16.6/16.3x162			19879 19881	4x19879 + 4x19881	4xPD/3/1 + 4xPD/4/1	**8103060007**	**810600J**	96	6x15x11.5-180°

411

4.11 *(4x2 tractor,6x2 tractor)*	86-88	•		**1987709580**		410	160x16.6/9.6x162 160x16.6/16.3x162			19877 19878	4x19877 + 4x19878	4xPD/7/1 + 4xPD/8/1	**8103060007**	**810600J**	100	6x15x11.5-180°
	86-88		•	**1987909580**	**1987901230**	410	200x16.6/9.6x162 200x16.6/16.3x162			19879 19881	4x19879 + 4x19881	4xPD/3/1 + 4xPD/4/1	**8103060007**	**810600J**	96	6x15x11.5-180°

Pacer

M210, M240, N210 *(C17,P17)*	94-	•	•	**1993901820** **1993909580** **1993909530**		410	200x17.9/13.0x178			19939	8 x 19939	8xVL/88/1	**8158056001**	**810635J**	96	6.35x14.29x11.9-150°(L9/10-9)
	94-		•		**1911109530**	394	177.8x12.7x358.4			19111	4x19111	4xGG/92/1	**8158056001**	**810635J**	72	6.35x14.29x11.9-150°(L9/10-9)

Strato

17.32, 17.33, 17.35, 17.37, 17.3, 17.4, TC17 *(C,L,P)*	88-	•	•	**1993809530**	**1993801820**	410	175x17.9/13.0x178			19938	8 x 19938	8xVL/87/1	**8158056001**	**810635J**	96	6.35x14.29x11.9-150°	

JURID by Honeywell

© JURID / All rights reserved 2005

© JURID / All rights reserved 2005

JURID by Honeywell

S

				→STOCK	STOCK→		∅ mm				WVA		BFMC	JURID	SUPASET	#	
Seddon-Atkinson…																	
Strato…																	
22.32, 22.33, 22.37, 22.3, 22.4, TC22 *(C,L,P)*	89-	•	•	**1993809530**	**1993801820**		410	175x17.9/13.0x178			19938	8 x 19938	8xVL/87/1	**8158056001**	**810635J**	96	6.35x14.29x11.9-150°
R24.26, TC26, TC32	91-	•	•	**1993901820** **1993909530**	**1907101230**		410	200x17.9/13.0x178			19071	8 x 19071	8xVL/88/1	**8158056001**	**810635J**	96	6.35x14.29x11.9-150°(L9/10-9)
PennineV	71-	•	•	**1938509580**	**1938505380**		381	177.80x18x189.06		**587029J**	19384 19385	6x19384 + 2x19385	6xCW/4/1 + 2xCW/4/2				
Sicca																	
166, 177 *(IS,LI,LS)*	78-	•		**2901605440**			425	160x28x111			29016	4x29016					
	78-		•		**1907605380** **1907605450** **1955809530**		410	180x16.1/13.8x211 180x16.0/9.0x211			19076 19559	4x19076 + 4x19559	4xPB/11/2 + 4xPB/12/1	**8103100002**	**811000J**	64	10x18x18-180°
SMB																	
C1			•	**1955709580** **1955709550**	**1955704040** **1955701230** **1955701230**		419	203x19.4/10.9x195 203x19.5/15.6x189			19557 19606	4x19557 + 4x19606	4xFT/7/1 + 4xFT/6/1	**8103050015**	**810500J**	128	5x16x12-150°
C2			•	**1961309580** **1961309550**	**1961304040** **1961301230** **1961301230**		419	178x19.5/15.6x189 178x19.4/10.9x189			19613 19614	4x19613 + 4x19614	4xFT/12/1 + 4xFT/11/1	**8103050015**	**810500J**	128	5x16x12-150°
C3 *(15")*			•		**1986203290** **1986209550**		311	203x18.5/17.0x140 203x18.0x143			19862 19863	4x19862 + 4x19863	4xFU/17/1 + 4xFU/18/1	**8103050014**	**810500J**	96	5x16x12-180°
C5			•		**1971803290**		360	360x19.1/11.5x184 360x20.5/17.5x187			19718 19719	4x19718 + 4x19719		**8103050015**	**810500J**	96	5x16x12-150°
D1 *(◯ : Wabco(PAN22) 22.5")*	98-		•				430		**569100J**								
K1 *(◯ : Knorr(SB 7000) 22.5")*	98-		•		**2910815390**		430	248x30x109	**569100J**		29108	4x29108					
KS			•				377		**569110J**								
◯ : Haldex *(DB22)* **22.5"**			•	**2912009560**	**2914305390**			247.6x30x105			29120	4x29120					
◯ : Wabco *(PAN19)* **19.5"**			•	**2912605399**	**2915905399**			210.5x30x92			29126	4x29126					

JURID by Honeywell
© JURID / All rights reserved 2005
© JURID / All rights reserved 2005
JURID by Honeywell

Spitzer

⊢⊣ : BPW		•	1903209580	1903204040 1903201250	420	180x17.5/10.5x204		19032	8x19032	8xBC/98/1	8162080001	810800J	80	8x15x15.5-180°
		•	1909409580	1909404040 1909401250	420	200x17.5/10.5x204		19094	8x19094	8xBC/97/1	8162080001	810800J	80	8x15x15.5-180°

Steyr-Daimler-Puch

10S14, 10S18, 11S, 9S14, 9S18	86-89	•		1787903320	325	140x12.0x249 140x12.0x288		17879 17880	2x17879 + 2x17880	2xFI/126/1 + 2xFI/125/1	8103060003	810600J	52	6x12x11.5-180°
	86-89		•	1982109580	325	160x12.5x288 160x12.5x249		19821 19822	2x19821 + 2x19822	2xSY/34/1 + 2xSY/33/1	8103060007	810600J	52	6x15x11.5-180°
12S14, 12S18 **10S18***(Firefighter)*	86-87		•	1709205460	400	120x10.2x430 120x10.2x324		17092 17093	2x17092 + 2x17093	2xSY/8/1 + 2xSY/9/1	8103080003	810800J	56	8x15x15.5-180°
11S, 8S, 9S	90-	•	•	1798805380	325	149.2x17.5/13.0x142		17988	8x17988	8xGG/210/1	8103080003	810800J	64	8x15x15.5-180°
1290, 1490, 990	69-78	•		1978205370	420	160x15.1x135 160x15.1x186		19782 19245	4x19782 + 4x19245	4xSY/31/1 + 4xSY/23/1	8103100002	811000J	56	10x18x18-180°
	69-78		•	1924605380	420	185x15.1x186		19246	8x19246	8xSY/24/1	8103100002	811000J	64	10x18x18-180°
1291, 1291/330S, 1391, 1491, 1891, 991	78-	•		1978205370	420	160x15.1x135 160x15.1x186		19782 19245	4x19782 + 4x19245	4xSY/31/1 + 4xSY/23/1	8103100002	811000J	56	10x18x18-180°
	78-		•	1924505370 1924505450	420	160x15.1x186 160x15.1x135		19245 19782	4x19245 + 4x19782	4xSY/23/1	8103100002	811000J	56	10x18x18-180°
	78-		•	1924605380	420	185x15.1x186		19246	8x19246	8xSY/24/1	8103100002	811000J	64	10x18x18-180°
12S, 13S*(4x2)*	87-	•	•	1992809530	362	170x20.0/13.5x165		19928	8x19928	8xRW/26/1	8158056001	810635J	96	6.35x14.29x11.9-150°(L9/10-9)
1390, 780, 880, 890	65-78	•		1724805380	400	140x12.1x321		17248	4x17248	4xBC/32/2	8103080003	810800J	48	8x15x15.5-180°
14S, 15S, 16S, 17S	90-		•	1993909580 1993909530	1993905380 1907101230 1907101230	410	200x17.9/13.0x178		19071	8 x 19071	8xVL/88/1	8158056001	810635J	96	6.35x14.29x11.9-150°(L9/10-9)
19S, 22S, 26S, 32S, 42S	86-93	•		1978205370	420	160x15.1x135 160x15.1x186		19782 19245	4x19782 + 4x19245	4xSY/31/1 + 4xSY/23/1	8103100002	811000J	56	10x18x18-180°
	94-	•		1949509580 1949509530	1949505380 1949501230 1949501230	410	183x17.0/11.8x178		19495	8x19495	8xMP/32/2	8162080002	810800J	64	8x18x15.5-180°
	86-93		•	1924605380	420	185x15.1x186		19246	8x19246	8xSY/24/1	8103100002	811000J	64	10x18x18-180°
19S, 22S, 26S, 32S, 42S*(6x2 8t)*	94-		•	1903209580	1903204040	420	180x17.5/10.5x204		19032	8x19032	8xBC/98/1	8162080001	810800J	80	8x15x15.5-180°
19S, 22S, 26S, 32S, 42S*(6x2 10t)*	94-		•	1909409580	1909404040	420	200x17.5/10.5x204		19094	8x19094	8xBC/97/1	8162080001	810800J	80	8x15x15.5-180°
19S, 22S, 26S, 32S, 42S	94-		•	1949609580 1949609530	1949605380 1949601230 1949601230	410	223x17.0/11.8x178		19496	8x19496	8xMP/36/2	8162080003	810800J	64	8x20x15.5-180°
19S, 22S, 26S, 32S, 42S*(6x2 6t)*	94-		•	1737704040	420	120x18.0/11.2x204		17377	8x17377	8xBC/78/1	8162080001	810800J	80	8x15x15.5-180°
19S, 22S, 26S, 32S, 42S	94-		•	1745609550	420	140x18.0/11.8x204		17456	8x17456		8103080008	810800J	80	8x22x15.5-180°
19S, 22S, 26S, 32S, 42S*(6x4)*	94-		•	1924605380	420	185x15.1x186		19246	8x19246	8xSY/24/1	8103100002	811000J	64	10x18x18-180°
480A, 480Z	57-	•		1709403320	400	100x10.1x331		17094	4x17094	4xSY/7/1	8103080003	810800J	48	8x15x15.5-180°
	57-		•	1709205460	400	120x10.2x430 120x10.2x324		17092 17093	2x17092 + 2x17093	2xSY/8/1 + 2xSY/9/1	8103080003	810800J	56	8x15x15.5-180°
580, 586Z, 680M, 680M3	59-		•	1709205460	400	120x10.2x430 120x10.2x324		17092 17093	2x17092 + 2x17093	2xSY/8/1 + 2xSY/9/1	8103080003	810800J	56	8x15x15.5-180°

© JURID / All rights reserved 2005

© JURID / All rights reserved 2005

										WVA		BFMC	JURID	SUPASET	#	

Steyr-Daimler-Puch...

...

590Plus	69-78	•			**1740805380** **1740801820**		325	100x8.2x255		17408	4x17408	4xFI/104/1	**8103060003**	**810600J**	48	6x12x11.5-180°
	69-78		•		**1763503320** **1763509530**		325	120x12.0x249 120x12.0x288		17635 17636	2x17635 + 2x17636	2xSY/20/2 + 2xSY/26/1	**8103060003**	**810600J**	52	6x12x11.5-180°
590*(Ch.# 2278 >)* **591, 690, 691**	69-78	•			**1775805380** **1775803270**		332	120x8.1x255		17758	4x17758	4xMF/24/1	**8103060007**	**810600J**	48	6x15x11.5-180°
6S	91-	•	•	**1587909580**	**1587905380**		325	99.2x17.5/15.6x142		15879	8x15879	8xGG/209/1	**8103080003**	**810800J**	48	8x15x15.5-180°
880E, 880Z, 880ZK	67-78	•	•		**1924505370** **1924505450**		420	160x15.1x186 160x15.1x135		19245 19782	4x19245 + 4x19782	4xSY/23/1	**8103100002**	**811000J**	56	10x18x18-180°
	67-78		•		**1924605380**		420	185x15.1x186		19246	8x19246	8xSY/24/1	**8103100002**	**811000J**	64	10x18x18-180°

525.23, 550.25, **575.25***(G,K,KH,S,SH)*	80-		•		**1924605450**		420	185x15.1x186		19246	8x19246	8xSY/24/1	**8103100002**	**811000J**	64	10x18x18-180°
69212T, 792NIG	86-		•		**1709205460**		400	120x10.2x430 120x10.2x324		17092 17093	2x17092 + 2x17093	2xSY/8/1 + 2xSY/9/1	**8103080003**	**810800J**	56	8x15x15.5-180°
SC6F72*(City Bus)*	87-	•			**571543J**		268	76.7x16.5x65		20323	4x20323					
	87-		•		**1503005460**		270	79.5x8.0x210 79.5x8.0x243	**587006J**	15742 15030	2x15742 + 2x15030	2xMB/80/1 + 2xMB/81/3	**8102050003**	**810500J**	52	5x10x9.5-180°
SL11, SS11 **SG18***(City Bus)*		•			**1978205450**		420	160x15.1x135 160x15.1x186		19782 19245	4x19782 + 4x19245	4xSY/31/1 + 4xSY/23/1	**8103100002**	**811000J**	56	10x18x18-180°
			•		**1924605450**		420	185x15.1x186		19246	8x19246	8xSY/24/1	**8103100002**	**811000J**	64	10x18x18-180°

TAM

TAM170		•			**1734005380**		400	140x10.1x331		17340	4x17340	4xBC/77/1	**8103080003**	**810800J**	48	8x15x15.5-180°
TAM170, TAM190A11			•		**1726905380** **1726909530**		400	140x12.1x321 140x12.1x425		17269 17270	4x17269 + 4x17270	4xBC/32/1 + 4xBC/33/1	**8103080003**	**810800J**	112	8x15x15.5-180°
TAM260A119T		•			**1982305380** **1982303320**		410	200x18.0/12.0x207 200x18.9x207.87		19823 19786	2x19823 + 6x19786	2xPB/34/2 + 6xPB/34/1	**8103100002**	**811000J**	112	10x18x18-180°

Telma Soma Rockwell

			•		**1938505380** **1938509530**		381	178x18.6/12.6x189 177.80x18x189.06	**587029J**	19384 19385	6x19384 + 2x19385	6xCW/4/1 + 2xCW/4/2	**8158057001**	**810635J**	96	6.35x15.88x11.9-150°(L10/10-10)
			•		**1950200**		381			19502	8x19502					

JURID by Honeywell
© JURID / All rights reserved 2005
© JURID / All rights reserved 2005
JURID by Honeywell

			STOCK	STOCK	⌀ mm				WVA	BFMC	JURID	SUPASET	#		

Terberg

: Faun	•	**1972305460**	410	180x17.9/12.7x178		19723	8x19723		**8162100001**		64	10x18		
: Perrot	•	**1975405380** **1975403320**	410	200x18.0/11.2x207		19754	8x19754	8xFI/115/1	**8103100003**	**811000J**	96	10x20x18-180°		
: Timken	•	**1911709550**	419	152.4x18.5/9.5x212 152.4x18.6/13.8x217		19117 19118	4x19117 + 4x19118	4xDF/20/1 + 4xDF/21/1	**8102050010**	**810500J**	64	5x13.5x11-180°(CT/BK)		

Teves

	•	**1019105980**	180	30x5.0x130		10191	4x10191	4xDK/31/1	**8103040002**	**810400J**	32	4x8x7.5-180°		
	•	**1118505380**	250	40x6.0x239		11185	4x11185		**8103040002**	**810400J**	48	4x8x7.5-180°		
	•	**1128205300**	200	30x4.0x230		11282	4x11282	4xTP/1/1	**8103040002**	**810400J**	14	4x8x7.5-180°		
	•	**1128505351**	180	30x3.9x180		11285	4x11285	4xBW/6/1		**810300J**	28	3x8x5.5-180°		
	•	**1129505360**	180	30x4.0x168		11295	4x11295	4xNU/6/1		**810300J**	28	3x8x5.5-180°		
	•	**1314105910**	230	50x4.9x211		13141	4x13141	4xDK/17/1	**8102040003**	**810400J**	40	4x10x7.5-180°		
	•	**1521505380**	400	80x8.2x394		15215	2x15215	2xMB/22/1	**8103060007**	**810600J**	28	6x15x11.5-180°		

Timken

	•	**1928304040**	420	180x19.6/16.4x189 180x19.0/12.0x194		19283 19284	4x19283 + 4x19284	4xSJ/28/1 + 4xSJ/29/1	**8103080005**	**810800J**	64	8x18x15.5-180°		

Titan

10 S1, 12 R2, 13 S1, 14 R2, 14 S1, 16 R2, 25 S2, 26 S2 *(: Colaert)*	•	**1947903290**	414	175x15.8/19.0/11.9x345 175x17.2/19.0/15.8x252		19479 19480	2x19479 + 2x19480	2xLF/100/1 + 2xLF/101/1	**8103060008**		112	6x16x12-180°		
32 S, S1, S2, SCEE, SEG *(: Bendix)*	•	**1940603290**	414	200x17.2/19.0/15.8x252 200x15.8/19.0/11.9x345		19406 19407	2x19406 + 2x19407	2xLF/102/1 + 2xLF/103/1	**8103060008**		82	6x16x12-180°		
S2 *(: Bendix)*	•	**1904904040**	414	150x12.5x347 285x12.5x285		19049 19199	2x19049 + 2x19199	2xSA/10/1 + 2xSA/11/1	**8102060005**		96	6x13.5x12-180°		
: BPW	•	**1903209550** **1903204040** **1903201250**	420	180x17.5/10.5x204		19032	8x19032	8xBC/98/1	**8162080001**	**810800J**	80	8x15x15.5-180°		
: Coder	•	**1933803290**	420	200x17.5/11.5x204		19338	8x19338	8xFT/5/1	**8103080007**	**810800J**	64	8x20x15.5-180°		
: ROR	•	**1903609552** **1903604042** **1903601232**	419	178x18.6/16.7x188 178x18.2/11.5x194		19036 19037	4x19036 + 4x19037	4xIL/66/3 + 4xIL/67/3	**8158057001**	**810635J**	96	6.35x15.88x11.9-150°(L10/10-10)		
	•	**1936904040**	419	219x18.5/10.5x196 219x18.6/15.2x190		19369 19370	4x19369 + 4x19370	4xFU/4/2 + 4xFU/5/2	**8158057001**	**810635J**	96	6.35x15.88x11.9-150°(L10/10-10)		
: SAE Dupillier *(S3012)*	•	**1761203320**	305	125x10.0x275		17612	4x17612		**8102060004**		48	6x13.5x11-180°		
: SAE Dupillier *(S3018)*	•	**1944403290**	305	180x11.5x265		19444	4x19444		**8103060007**	**810600J**	64	6x15x11.5-180°		
: SAE Dupillier *(S3120)*, : SAE Dupillier *(S3220)*	•	**1940503290**	305	200x12.0x141		19405	8x19405		**8103080003**	**810800J**	80	8x15x15.5-180°		
: SAE Dupillier *(S4215(32S2))*	•	**1935903290**	414	150x19.0/9.1x202 151x19.0/14.8x200		19359 19360	4x19359 + 4x19360		**8102060009**		64	6x18x12-180°		

© JURID / All rights reserved 2005

© JURID / All rights reserved 2005

			STOCK	STOCK	⌀ mm				WVA	BFMC	JURID	SUPASET	#			

Titan…

…															
⊢⊣ : SAE Dupillier	•	1909409580	1909404040 1909401250	420	200x17.5/10.5x204		19094	8x19094	8xBC/97/1	8162080001	810800J	80	8x15x15.5-180°		
(O) : Bendix	•		1951103270	414	150x17.2/19.0/15.8x252 150x15.8/19.0/11.9x345		19511 19512	2x19511 + 2x19512	2xLF/104/1 + 2xLF/105/1	8103060008		92	6x16x12-180°		

Trabosa

⊢⊣ : BPW,⊢⊣ : BPW *(Eco)*	•	1909409550	1909404040 1909401250	420	200x17.5/10.5x204		19094	8x19094	8xBC/97/1	8162080001	810800J	80	8x15x15.5-180°		
⊢⊣ : BPW	•	1903209550	1903204040 1903201250	420	180x17.5/10.5x204		19032	8x19032	8xBC/98/1	8162080001	810800J	80	8x15x15.5-180°		
	•	1957409550	1957404040 1957401250	300	200x18.0/11.0x145		19574	8x19574	8xBC/80/1	8162080001	810800J	64	8x15x15.5-180°		

Trailor

34043, S 28, S252 *(⊢⊣ : SAE Dupillier (S3018))*	•		1944403290	305	180x11.5x265		19444	4x19444		8103060007	810600J	64	6x15x11.5-180°		
5117, RC 12, S 25 *(⊢⊣ : SAE Dupillier (S3012))*	•		1761203320	305	125x10.0x275		17612	4x17612		8102060004		48	6x13.5x11-180°		
G30	•		1951704040	300	150x15.5/7.7x129 150x15.5/12.2x132		19517 19518	4x19517 + 4x19518	4xSJ/25/1 + 4xSJ/24/1	8162080001	810800J	64	8x15x15.5-180°		
R 10, R 11, R 12, R 13, R 14, R 16, S 10, S 11, S 12, S 13, S 14, S 16 *(⊢⊣ : Trailor (S4215))*	•		1935903290	414	150x19.0/9.1x202 151x19.0/14.8x200		19359 19360	4x19359 + 4x19360		8102060009		64	6x18x12-180°		
S 25, S 29, S 32, S 35, SC 19, SC 22, SC 24, SC 25 *(⊢⊣ : Trailor (S4221))*	•		1936703290	414	211x17.7/9.6x202 211x18.6/15.2x220		19367 19368	4x19367 + 4x19368		8102060009		96	6x18x12-180°		
⊢⊣ : BPW	•		1910304040	300	200x10.0x141		19103	8x19103	8xBC/55/1	8162080001	810800J	64	8x15x15.5-180°		
⊢⊣ : ROR *(18A)*	•		1915005700 1915009530	419	152.4x18.5/9.5x211 152.4x18.5/13.5x218		19150 19151	4x19150 + 4x19151	4xDF/20/3 + 4xDF/21/3	8158057001	810635J	80	6.35x15.88x11.9-150°(L10/10-10)		
⊢⊣ : SAE Dupillier *(S3115)*	•		1940103290	305	150x12.0x141		19401	8x19401	8xSJ/36/1	8103060007	810600J	64	6x15x11.5-180°		
⊢⊣ : SAE Dupillier *(S3120)*, ⊢⊣ : SAE Dupillier *(S3220)*	•		1940503290	305	200x12.0x141		19405	8x19405		8103080003	810800J	80	8x15x15.5-180°		
⊢⊣ : SMB *(C1)*	•	1955709580 1955709550	1955704040 1955701230 1955701230	419	203x19.4/10.9x195 203x19.5/15.6x189		19557 19606	4x19557 + 4x19606	4xFT/7/1 + 4xFT/6/1	8103050015	810500J	128	5x16x12-150°		
⊢⊣ : SMB *(C2)*	•	1961309580 1961309550	1961304040 1961301230 1961301230	419	178x19.5/15.6x189 178x19.4/10.9x189		19613 19614	4x19613 + 4x19614	4xFT/12/1 + 4xFT/11/1	8103050015	810500J	128	5x16x12-150°		
⊢⊣ : SMB *(C3)* **15"**	•		1986203290 1986209550	311	203x18.5/17.0x140 203x18.0x143		19862 19863	4x19862 + 4x19863	4xFU/17/1 + 4xFU/18/1	8103050014	810500J	96	5x16x12-180°		
⊢⊣ : SMB *(C5)*	•		1971803290	360	360x19.1/11.5x184 360x20.5/17.5x187		19718 19719	4x19718 + 4x19719		8103050015	810500J	96	5x16x12-150°		
⊢⊣ : Trailor *(0MS300TEM)*, ⊢⊣ : Trailor *(MS300)*	•		1996703290 1996709550	300	200x15.8/13.4x132 200x14.8/9.3x127		19967 19968	4x19967 + 4x19968	4xBC/106/1 + BC/107/1	8102050013	810500J	96	5x15x12-180°		

© JURID / All rights reserved 2005

© JURID / All rights reserved 2005

				STOCK	STOCK	⌀ mm					WVA		BFMC	JURID	SUPASET	#		
Trailor…																		
…																		
↦ : **Trailor** *(18-20)* **Star hub,** ↦ : **Trailor** *(L 200 MD)* **8 holes,** ↦ : **Trailor** *(L 200 TEM)* **Single wheel / 10 holes,** ↦ : **Trailor** *(L 200 TEM)* **Twin wheels / 10 holes,** ↦ : **Trailor** *(L 200)* **10 holes,** ↦ : **Trailor** *(L 200)* **8 holes**		•	**1903609580**	**1903604040** **1903601230**		419	178x19.0/16.0x189 178x18.2/11.5x194			19036 19037	4x19036 + 4x19037	4xRW/5/4 + 4xRW/6/4	**8103050014**	**810500J**	96	5x16x12-180°	
↦ : **Trailor** *(26)* **Star hub,** ↦ : **Trailor** *(L 400 TEM)* **10 holes,** ↦ : **Trailor** *(N 400 TEM)* **10 holes,** ↦ : **Trailor** *(N 400)* **10 holes,** ↦ : **Trailor** *(N 400)* **6 holes**		•		**1936504042** **1936509582** **1936509552**		419	203x18.2/11.5x194 203x18.6/15.7x188			19365 19366	4x19365 + 4x19366	4xRW/2/5 + 4xRW/1/5	**8158057001**	**810635J**	128	6.35x15.88x11.9-150°(L10/10-10)	
↦ : **Trailor** *(H100)*		•		**1954403290**		355	150x12.5x181			19544	8x19544				64		
↦ : **Trailor** *(H100TEM)*		•		**164150182329**		350											
↦ : **Trailor** *(SD17)*, ↦ : **Trailor** *(SD18)*, ↦ : **Trailor** *(SD19)*, ↦ : **Trailor** *(SD29)*		•		**1911709550**		419	152.4x18.5/9.5x212 152.4x18.6/13.8x217			19117 19118	4x19117 + 4x19118	4xDF/20/1 + 4xDF/21/1	**8102050010**	**810500J**	64	5x13.5x11-180°(CT/BK)	
Ⓞ : **Knorr** *(SB 7000)* **22.5"**	98-	•		**2910815390**		430	248x30x109	**569100J**		29108	4x29108						
Ⓞ : **Wabco** *(PAN22)* **22.5"**	98-	•				430		**569100J**									

U. Piacenza

↦ : **BPW**		•	**1903209550**	**1903204040** **1903201250**		420	180x17.5/10.5x204			19032	8x19032	8xBC/98/1	**8162080001**	**810800J**	80	8x15x15.5-180°	
		•	**1909409550**	**1909404040** **1909401250**		420	200x17.5/10.5x204			19094	8x19094	8xBC/97/1	**8162080001**	**810800J**	80	8x15x15.5-180°	
		•	**1957409550**	**1957404040** **1957401250**		300	200x18.0/11.0x145			19574	8x19574	8xBC/80/1	**8162080001**	**810800J**	64	8x15x15.5-180°	
		•		**1549409530**		420	90x11.8x397			15494	4x15494	4xFI/84/1	**8103080003**	**810800J**	64	8x15x15.5-180°	

Unic (Unic F.F.S.A)

Alsace																	
MZ30CA*(8.5t)*	66-	•	•		**1758203320**		356	100x10.0x349 100x10.0x322			17582 17805	2x17582 + 2x17805	2xSA/24/1 + 2xBT/53/1	**8102050009**	**810500J**	64	5x13x9.5-180°
Izoard																	
2764*(6x4)*	-72	•			**1752603320**		432	125x12.0x423			17526	4x17526	4xUM/26/-			92	
	-72		•		**1533603320**		420	90x12.7x422			15336	4x15336	4xFI/80/1	**8103080002**	**810800J**	64	8x14x15.5-180°
30, 32, 35, 40*(U8,U8.5)*	78-	•			**571379J**			105x18x75			20759	4x20759					
			•		**1581403320** **1581409530**		254	90x5.3x245 90x6.3x280			15814 15843	2x15814 + 2x15843	2xFI/118/1 + 2xFI/117	**8103040002**	**810400J**	48	4x8x7.5-180°

JURID by Honeywell

© JURID / All rights reserved 2005

© JURID / All rights reserved 2005

JURID by Honeywell

U

				STOCK	STOCK	mm				WVA	BFMC	JURID	SUPASET	#		

Unic (Unic F.F.S.A)...

Izoard...

MZ124, MZ125, MZ221, MZ222, ZU122 *(6x2 19t)*	60-	•		**1752603320**	432	125x12.0x423		17526	4x17526	4xUM/26/-				92		
	60-		•	**1934503270**	412	190x12.0x405		19345	4x19345	4xUM/24/-				128		
MZ125, MZ221 *(6x4 19t)* **P270** *(6x2 19t,6x2 26t,6x4 19t,6x4 26t)* **P12A200, P200, P220, T270A** *(6x2 19t,6x2 26t,6x4 26t)*		•		**1752603320**	432	125x12.0x423		17526	4x17526	4xUM/26/-				92		
P12A200, P200, P220, P270, T270A *(6x2 19t,6x2 26t)*			•	**1934503270**	412	190x12.0x405		19345	4x19345	4xUM/24/-				128		

Vercors

96CA *(17.5t Esterel engine)* **P11A200, P12R/R2, T11A200** *(18.2t)*			•	**1934503270**	412	190x12.0x405		19345	4x19345	4xUM/24/-				128		
P12A *(17.5t)* **96CA** *(17.5t Esterel engine)*		•		**1752603320**	432	125x12.0x423		17526	4x17526	4xUM/26/-				92		

Vosges

P6A *(8.8t)*		•	•	**1758203320**	356	100x10.0x349 100x10.0x322		17582 17805	2x17582 + 2x17805	2xSA/24/1 + 2xBT/53/1	**8102050009**	**810500J**	64	5x13x9.5-180°		

Van Hool

3 EAV, 3 EF *(⟷ : ROR)*		•		**1936504042** **1936509582** **1936509552**	419	203x18.2/11.5x194 203x18.6/15.7x188		19365 19366	4x19365 + 4x19366	4xRW/2/5 + 4xRW/1/5	**8158057001**	**810635J**	128	6.35x15.88x11.9-150°(L10/10-10)		
32K75, S 22510, VH70 *(⟷ : ROR)*		•		**1936904040**	419	219x18.5/10.5x196 219x18.6/15.2x190		19369 19370	4x19369 + 4x19370	4xFU/4/2 + 4xFU/5/2	**8158057001**	**810635J**	96	6.35x15.88x11.9-150°(L10/10-10)		
VHZ 78, VHZ 80, VHZ 82 *(⟷ : ROR)*		•	**1960409550**	**1960403290** **1960401230**	311	190x15.3/10.8x126 190x16.1/13.1x158		19604 19605	4x19604 + 4x19605	4xRW/9/2 + 4xRW/13/2	**8158057001**	**810635J**	80	6.35x15.88x11.9-150°(L10/10-10)		
⟷ : BPW		•	**1903209550**	**1903204040** **1903201250**	420	180x17.5/10.5x204		19032	8x19032	8xBC/98/1	**8162080001**	**810800J**	80	8x15x15.5-180°		
		•	**1909409550**	**1909404040** **1909401250**	420	200x17.5/10.5x204		19094	8x19094	8xBC/97/1	**8162080001**	**810800J**	80	8x15x15.5-180°		
⟷ : ROR		•	**1903609552**	**1903604042** **1903601232**	419	178x18.6/16.7x188 178x18.2/11.5x194		19036 19037	4x19036 + 4x19037	4xIL/66/3 + 4xIL/67/3	**8158057001**	**810635J**	96	6.35x15.88x11.9-150°(L10/10-10)		

300		•		**1758903320**	420	125x12.5x241		17589	4x17589		**8103060007**	**810600J**	48	6x15x11.5-180°		
			•	**1732303320**	420	140x12.5x422		17323	4x17323	4xFI/81/1	**8103080003**	**810800J**	64	8x15x15.5-180°		
309, 760	79-	•	•	**1982305380** **1982303320**	410	200x18.0/12.0x207 200x18.9x207.87		19823 19786	2x19823 + 6x19786	2xPB/34/2 + 6xPB/34/1	**8103100002**	**811000J**	112	10x18x18-180°		
314N3, 320, 409	78-	•		**1555803320**	420	90x12.5x421		15558	4x15558	4xFI/80/1	**8103080003**	**810800J**	64	8x15x15.5-180°		
	78-		•	**1758903320**	420	125x12.5x241		17589	4x17589		**8103060007**	**810600J**	48	6x15x11.5-180°		
329A	78-	•	•	**1776405380**	325	100x8.2x296 100x8.2x255		17764 17408	2x17764 + 2x17408	2xOM/12/1 + 2xFI/102/1	**8103060003**	**810600J**	52	6x12x11.5-180°		

© JURID / All rights reserved 2005

© JURID / All rights reserved 2005

Van Hool...

													WVA		BFMC			
																JURID	SUPASET	#
760	76-78	•			**1786909530**		420	140x12.5x196				17869	8x17869	8xFI/105/1	**8103080007**	**810800J**	64	8x20x15.5-180°
	76-78		•		**1969403320** **1969409530**		420	180x12.5x196				19694	8x19694	8xFI/106/1	**8103080007**	**810800J**	128	8x20x15.5-180°
A300, A500			•		**1900435380** **1900435450**		410	220x19.0/17.0x211 220x19.9/11.3x211 220x16.8x210.8				19004 19743 19755	2x19004 + 2x19743 + 19755	2xPB/32/2 + 2xPB/32/1 + 4xPB/31/1	**8103100002**	**811000J**	96	10x18x18-180°
A300, A500, A600, Acron, Alizee		•			**1994605450** **1994605380**		410	180x18.6/15.2x212 180x18.1/11.0x210				19946 19947	4x19946 + 4x19947		**8103100002**	**811000J**	64	10x18x18-180°
A308, A508	80-	•	•	**1938509580**	**1938505380**		381	177.80x18x189.06		**587029J**		19384 19385	6x19384 + 2x19385	6xCW/4/1 + 2xCW/4/2				
A420, A440	92-		•		**1961705700** **1961703270**		419	203x18.5/9.4x211 203x18.5/15.8x175.6				19617 19911	4x19617 + 4x19911	4xDF/30/1 + 4xDF/31/1	**8158057001**	**810635J**	144	6.35x15.88x11.9-150°(L10/10-10)
A420, A440, EOS200	92-	•			**2974705440** **2974709560**		406	139x32x121	**567113J**			29747	8x29747					
	92-	•			**2996905440**		406	139x34.5x121	**567113J**			29969	8x29969					
A600			•		**1961705700** **1961703270**		419	203x18.5/9.4x211 203x18.5/15.8x175.6				19617 19911	4x19617 + 4x19911	4xDF/30/1 + 4xDF/31/1	**8158057001**	**810635J**	144	6.35x15.88x11.9-150°(L10/10-10)
A662		•	•		**1758903320**		420	125x12.5x241				17589	4x17589		**8103060007**	**810600J**	48	6x15x11.5-180°
Acron, Alizee			•		**1911405380**		410	220x19.4/11.5x200 220x19.4/15.4x200				19114 19115	4x19114 + 4x19115		**8103100002**	**811000J**	96	10x18x18-180°
AltanoBus		•			**1982305380** **1982303320**		410	200x18.0/12.0x207 200x18.9x207.87				19823 19786	2x19823 + 6x19786	2xPB/34/2 + 6xPB/34/1	**8103100002**	**811000J**	112	10x18x18-180°
AltanoBus **T811, T812, T813, T814, T815** *(Reinforced drum)*			•		**1989603270** **1989609530**		420	178x18.5x197				19896	8x19896	8xAX/14/6	**8158056001**	**810635J**	112	6.35x14.29x11.9-150°(L9/10-9)
Astromega		•	•		**1982305380** **1982303320**		410	200x18.0/12.0x207 200x18.9x207.87				19823 19786	2x19823 + 6x19786	2xPB/34/2 + 6xPB/34/1	**8103100002**	**811000J**	112	10x18x18-180°
EOS110, EOS200, EOS230, EOS233, EOS90	92-	•			**2974705440** **2974709560**		410	139x32x121	**567802J**			29747	8x29747					
	92-	•			**2996905440**		410	139x34.5x121	**567802J**			29969	8x29969					
EOS200	92-		•		**1969905380**		410	220x17.5/15.7x196 220x17.4/6.3x196 220x18.45x196				19699 19847 19848	2x19699 + 2x19847 + 4x19848	2xPB/18/2 + 2xPB/18/1 + 4xPB/19/1	**8103100002**	**811000J**	96	10x18x18-180°
G280.1			•		**1940603290**		414	200x17.2/19.0/15.8x252 200x15.8/19.0/11.9x345				19406 19407	2x19406 + 2x19407	2xLF/102/1 + 2xLF/103/1	**8103060008**		82	6x16x12-180°
G280.1, G280.2, G280.3, G280.4		•			**1949405450**		410	163x17.0/11.8x178				19494	8x19494	8xMP/31/2	**8162080001**	**810800J**	64	8x15x15.5-180°
G280.2			•		**1978600**		410					19786	4x19786					
G280.3, G280.4			•		**1900405380** **1900405450**		410	220x16.1/14.1x211 220x19.9/11.3x211 220x16.8x210.8				19004 19743 19755	2x19004 + 2x19743 + 4x19755	2xPB/32/2 + 2xPB/32/1 + 4xPB/31/1	**8103100002**	**811000J**	96	10x18x18-180°
T809*(Alizee)*		•	•		**1989603270** **1989609530**		420	178x18.5x197				19896	8x19896	8xAX/14/6	**8158056001**	**810635J**	112	6.35x14.29x11.9-150°(L9/10-9)
T811, T812, T813, T814, T815		•		**1938509580**	**1938505380**		381	177.80x18x189.06		**587029J**		19384 19385	6x19384 + 2x19385	6xCW/4/1 + 2xCW/4/2				
T815		•			**2903005390** **2903009560**			250x28x118				29030	4x29030					

© JURID / All rights reserved 2005

© JURID / All rights reserved 2005

				→STOCK	STOCK→	∅ mm				WVA	BFMC	JURID	SUPASET	#	

Vauxhall

Movano

1.9 DTI, 2.2 DTI(○) *: Bosch)*	09/00-10/01	•				305		**562190**							
1.9 DTI, 2.5 DTI(○) *: Bosch)*	10/01-	•				305		**562190**							
1.9DTI, 2.2DTI	00-01	•		**571932J**		280	139x18x68	**562105**		71932	4x71932				
1.9DTI, 2.2DTI, 2.5DTI	01-	•		**573107**		280	139x73.6	**562105**		23613	4x23613				
	01-	•		**573055**			115.8x51.3			23669	4x23669				
2.2 DTI(○) *: Bosch)*	09/00-	•				305		**562190**							
2.5 D(○) *: Bosch)*	10/98-09/00	•				305		**562190**							
2.5D, 2.8DTI	98-01	•		**571932J**		280	139x18x68	**562105**		71932	4x71932				
2.8 DTI(○) *: Bosch)*	10/98-10/01	•				305		**562190**							

Vivaro

1.9DI, 1.9DTI, 2.016V	01-	•		**573058**			145.1x18x63.4			23099	4x23099				
	01-	•		**573059**		280	94.5x17x57	**562211**							

Viberti

FR 16, FR 26 SRP, FR 29, FR 30 SRP, FR 31 SRP		•		**1549409530**		420	90x11.8x397			15494	4x15494	4xFI/84/1	**8103080003**	**810800J**	64	8x15x15.5-180°
⊢⊣ : BPW,⊢⊣ : BPW *(Eco)* **Notched**		•	**1909409550**	**1909404040** **1909401250**		420	200x17.5/10.5x204			19094	8x19094	8xBC/97/1	**8162080001**	**810800J**	80	8x15x15.5-180°
⊢⊣ : BPW,⊢⊣ : BPW Notched		•	**1903209550**	**1903204040** **1903201250**		420	180x17.5/10.5x204			19032	8x19032	8xBC/98/1	**8162080001**	**810800J**	80	8x15x15.5-180°
⊢⊣ : BPW		•	**1957409550**	**1957404040** **1957401250**		300	200x18.0/11.0x145			19574	8x19574	8xBC/80/1	**8162080001**	**810800J**	64	8x15x15.5-180°
		•	**1990209580**	**1990204040** **1990201250**		360	200x18.6/13.9x159.3 200x18.6/11.5x189.5			19902 19903	4x19902 + 4x19903	4xBC/100/1 + 4xBC/101/1	**8162080001**	**810800J**	72	8x15x15.5-180°
		•		**1920004040**		420	160x18.0/11.0x204			19200	8x19200	8xBC/35/1	**8162080001**	**810800J**	80	8x15x15.5-180°
		•		**1995203290**		360	160x18.6/11.1x190 160x18.6/14.0x159			19952 19953	4x19952 + 4x19953	4xBC/104/1 + BC/105/1	**8162080001**	**810800J**	72	8x15x15.5-180°
⊢⊣ : Fiat		•	**1520709580**			420	90x8.2x405			15207	4x15207	4xFI/79/1	**8103080003**	**810800J**	64	8x15x15.5-180°
		•		**1779709550**		420	110x17.5/11.5x220			17797	8x17797		**8103080007**	**810800J**	80	8x20x15.5-180°

JURID by Honeywell
© JURID / All rights reserved 2005
© JURID / All rights reserved 2005
JURID by Honeywell

				→STOCK STOCK→		∅ mm					WVA	BFMC	JURID	SUPASET	#	

Volkswagen

LT

28	00-		•	**571846J**		258	141.3x17.3x50	**569120J**		**587010J**	21621 21622	2x21621 + 2x21622				
	00-		•	**571846J**		272	141.3x17.3x50	**569121J**		**587010J**	21621 21622	2x21621 + 2x21622				
	96-		•	**571846J**		272	141.3x17.3x50	**567761J**		**587010J**	21621 21622	2x21621 + 2x21622				
	96-		•	**571846J**		258	141.3x17.3x50	**567771J**		**587010J**	21621 21622	2x21621 + 2x21622				
28, 31	12/73-			**1319305870**							13193	4x13193				
35*(Simple wheel)*	75-96		•	**1351605876**		250	55x5.0x260 55x6.0x202				13193 13516	2x13193 + 2x13516	2xVN/14/1 + 2xVN/18/1	**8103040002**	**810400J**	36	4x8x7.5-180°
28, 31, 40, 45, 50, 55 **35***(Simple wheel,Twin wheels)*	75-81	•		**571255J**			89.8x18.5x73.5				20280	4x20280				
	81-96	•		**571255J**		281	89.8x18.5x73.5	**561308J**			20280	4x20280				
28, 35	00-	•		**571844J**		276	156.5x20.7x64.8	**569122J**		**587010J**	21576 21577	2x21576 + 2x21577				
	96-	•		**571844J**		276	156.5x20.7x64.8	**567760J**		**587010J**	21576 21577	2x21576 + 2x21577				
35	00-		•	**571910J**		258	156.3x18.8x54.8	**569120J**		**587010J**	21592	4x21592				
	00-		•	**571910J**		272	156.3x18.8x54.8	**569121J**		**587010J**	21592	4x21592				
35*(◯ : Bosch)*	00-		•	**571950J**		258	125.7x19x62.6	**569120J**			23021	4x23021				
	00-		•	**571950J**		272	125.7x19x62.6	**569121J**			23021	4x23021				
35	96-		•	**571910J**		272	156.3x18.8x54.8	**567761J**		**587010J**	21592	4x21592				
	96-		•	**571910J**		258	156.3x18.8x54.8	**567771J**		**587010J**	21592	4x21592				
35*(◯ : Bosch)*	98-		•	**571950J**			125.7x19x62.6				23021	4x23021				
40, 45, 50, 55 **35***(Twin wheels)*	75-96		•	**1577505380**		270	64.8x7.0x212.2				15775	4x15775	4xVN/19/1	**8103040002**	**810400J**	40	4x8x7.5-180°
40, 50D*(4x4)*	79-91	•		**571272J**		280	149x17.8x69			**581304J**	20784	4x20784				
	79-91		•	**1577505380**		270	64.8x7.0x212.2				15775	4x15775	4xVN/19/1	**8103040002**	**810400J**	40	4x8x7.5-180°
46	00-	•		**2907604530** **2907609560**		276	164.8x20x73	**569122J**		**587010J**	29076	4x29076				
	96-	•		**2907604530** **2907609560**		276	164.8x20x73	**567760J**		**587010J**	29076	4x29076				
	00-		•	**2907604530** **2907609560**		258	164.8x20x73	**569120J**		**587010J**	29076	4x29076				
	00-		•	**2907604530** **2907609560**		272	164.8x20x73	**569121J**		**587010J**	29076	4x29076				
	96-		•	**2907604530** **2907609560**		272	164.8x20x73	**567761J**		**587010J**	29076	4x29076				
	96-		•	**2907604530** **2907609560**		258	164.8x20x73	**567771J**		**587010J**	29076	4x29076				

JURID by Honeywell
© JURID / All rights reserved 2005
© JURID / All rights reserved 2005
JURID by Honeywell

→STOCK STOCK→ mm WVA BFMC JURID SUPASET #

Volkswagen...

Transporter (T4) Caravelle

1.8(*15",16"*)	96-	•			280		**562080**				
1.8, 1.9D, 1.9TD, 2, 2.4D	96-	•		**571458J**	282	91.6x18.2x80	**562079**		20652	4x20652	
	96-	•		**571934J**	282	156.4x19.6x68.5	**562079**		21883	4x21883	
1.9D, 2.5D, 2.5, 2(*15"*)	90-96	•		**571458J**	280	91.6x18.2x80	**561610J**		20652	4x20652	
2.5TDi, 2.5i, 2.8VR6	96-	•		**571458J**	280	91.6x18.2x80	**562080**		20652	4x20652	
	96-	•		**571934J**	280	156.4x19.6x68.5	**562080**		21883	4x21883	

Transporter Van (T4)

1.8, 1.9D, 1.9TD, 2.4D, 2.5TDi, 2.5i, 2 (*15"*)	96-	•			280		**562080**				
1.8, 1.9D, 1.9TD, 2, 2.4D, 2.5TDi, 2.5i, 2.8VR6	96-		•		280		**562081J**				
1.9D, 2, 2.5, 2.5D	90-96	•		**571458J**	280	91.6x18.2x80	**561610J**		20652	4x20652	
2.5TDi(*16"*)	96-		•		282		**562079**				
2.5 TDi, 2.5, 2.8(○) : *Teves 16"*)	03/98-03/03	•			300		**562198**				

Transporter/Bus

T4(*2 15"*)	96-			**571847J**	282	129.9x19.2x65.5			21478	4x21478	
T4(*2.4D* (○) : *Girling 15"*)	96-			**571948J**	280	91.6x18.2x80			21634	4x21634	
T4(○) : *Girling 15"*)	91-96	•		**571458J**	280	91.6x18.2x80	**561610J**		20652	4x20652	
T4(*14"*)	91-96	•		**571460J**	260	130x19x56	**561609J**		20124	4x20124	
T4(*15"*)	91-96	•		**571847J**	282	129.9x19.2x65.5	**561857J**		21478	4x21478	
T4(○) : *Teves 15"*)	91-96	•		**571934J**	280	156.4x19.6x68.5			21883	4x21883	
T4(*1.9TD 15"*)	96-	•		**571847J**	282	129.9x19.2x65.5			21478	4x21478	
T4 (*2.5* (○) : *Girling 15", 2.8* (○) : *Girling 15"*)	96-	•		**571948J**	280	91.6x18.2x80			21634	4x21634	
T4	91-96		•	**362019J**	268	268x56					
	96-		•	**571875J**	280	95x17.3x57.5			21882	4x21882	
Type III	79-85	•		**571236J**	278	76.7x18.7x70	**561252J**		20011	4x20011	
Type III (*1.6 -ABS,1.9 -ABS,2.1 -ABS*)	85-90	•		**571380J**	258	130x19.7x58	**561437J**		20979	4x20979	
Type III(*1.7*)	85-90	•		**571380J**	258	130x19.7x58	**561493J**		20979	4x20979	

© JURID / All rights reserved 2005
© JURID / All rights reserved 2005

				STOCK	STOCK	⌀ mm				WVA	BFMC	JURID	SUPASET	#	

Volkswagen...

Transporter/Bus...

Type III	79-85	•		**1351605876**		250	55x5.0x260 55x6.0x202			13193 13516	2x13193 + 2x13516	2xVN/14/1 + 2xVN/18/1	**8103040002**	**810400J**	36	4x8x7.5-180°
	85-90	•		**1351605876**		250	55x5.0x260 55x6.0x202			13193 13516	2x13193 + 2x13516	2xVN/14/1 + 2xVN/18/1	**8103040002**	**810400J**	36	4x8x7.5-180°
Type II	12/73-			**1319305870**						13193	4x13193					
	74-79	•		**571236J**		278	76.7x18.7x70	**561252J**		20011	4x20011					
	74-79	•		**1351605876**		250	55x5.0x260 55x6.0x202			13193 13516	2x13193 + 2x13516	2xVN/14/1 + 2xVN/18/1	**8103040002**	**810400J**	36	4x8x7.5-180°

Volvo

F10

(O) : Z Cam	86-94	•	•	**1994109580** **1994109530**	**1994101820** **1994101230** **1994101230**	410	150x17.9/13.0x178			19941	8x19941	8xVL/86/1	**8158056001**	**810635J**	96	6.35x14.29x11.9-150°(L9/10-9)
	76-86	•		**1946709580** **1946709530**	**1946701230** **1946701230**	394	178x19.1/11.7x192 178x19.1/14.8x147			19467 19468	4x19467 + 4x19468	4xVL/73/1 + 4xVL/72/1	**8131064002**		84	6.4x19x11.9-120°(BN)
	76-86	•			**1956009530**	413	152.6x18.5/11.1x200 152.6x18.5/14.2x160			19560 19561	4x19560 + 4x19561	4xVL/74/1 + 4xVL/75/1	**8131064002**		88	6.4x19x11.9-120°(BN)
(O) : Z Cam	86-94	•		**1993801820** **1993809580** **1993809530**	**1909001230** **1909001230** **1909001230**	410	173.2x18.0/13.4x176.2			19090	8 x 19090	8xVL/87/2	**8158056002**	**810635J**	112	6.35x15.88x11.9-145°
	86-94	•		**1993901820** **1993909580** **1993909530**	**1907101230** **1907101230** **1907101230**	410	198.2x18.0/13.4x176.2			19071	8 x 19071	8xVL/88/2	**8158056002**	**810635J**	112	6.35x15.88x11.9-145°
	76-86		•	**1956209530**	**1956201230**	394	203.4x18.5/11.1x192 203.4x18.5/14.3x147			19562 19563	4x19562 + 4x19563	4xVL/76/1 + 4xVL/77/1	**8131064002**		84	6.4x19x11.9-120°(BN)
	76-86		•	**1979909580** **1979909530**	**1979901230** **1979901230**	394	254x19.0/14.7x147 254x19.0/11.5x198			19799 19800	4x19799 + 4x19800	4xVL/82/1 + 4xVL/81/1	**8158057002**	**810635J**	84	6.35x15.88x11.9-150°(L10/10-10)
	76-86	•			**1766401820** **1766409530**	413	127x19.1/11.6x200 127x19.1/14.8x160			17664 17665	4x17664 + 4x17665	4xVL/71/1 + 4xVL/70/1	**8131064002**		72	6.4x19x11.9-120°(BN)
	76-86		•		**1988501820** **1988509530**	394	240x19.0/11.5x198 240x19.0/15.0x147			19885 19886	4x19885 + 4x19886	4xVL/83/1 + 4xVL/84/1	**8131064002**		84	6.4x19x11.9-120°(BN)
(O) : Z Cam	86-94	•		**1993801820** **1993809580** **1993809530**	**1909001230** **1909001230** **1909001230**	410	173.2x18.0/13.4x176.2			19090	8 x 19090	8xVL/87/2	**8158056002**	**810635J**	112	6.35x15.88x11.9-145°
	86-94	•		**1993901820** **1993909580** **1993909530**	**1907101230** **1907101230** **1907101230**	410	198.2x18.0/13.4x176.2			19071	8 x 19071	8xVL/88/2	**8158056002**	**810635J**	112	6.35x15.88x11.9-145°
	86-94	•		**1994001820** **1994009580** **1994009530**	**1906801230** **1906801230** **1906801230**	410	223.2x18.0/13.4x176.2			19068	8 x 19068	8xVL/89/2	**8158056002**	**810635J**	112	6.35x15.88x11.9-145°
	86-94	•			**1799201820**	410	125x18.5/14.4x178			17992	8x17992	8xVL/85/1	**8158056001**	**810635J**	64	6.35x14.29x11.9-150°(L9/10-9)

F12

(O) : Z Cam	86-94	•	•	**1994109580** **1994109530**	**1994101820** **1994101230** **1994101230**	410	150x17.9/13.0x178			19941	8x19941	8xVL/86/1	**8158056001**	**810635J**	96	6.35x14.29x11.9-150°(L9/10-9)
	76-86	•		**1946709580** **1946709530**	**1946701230** **1946701230**	394	178x19.1/11.7x192 178x19.1/14.8x147			19467 19468	4x19467 + 4x19468	4xVL/73/1 + 4xVL/72/1	**8131064002**		84	6.4x19x11.9-120°(BN)
	76-86	•			**1956009530**	413	152.6x18.5/11.1x200 152.6x18.5/14.2x160			19560 19561	4x19560 + 4x19561	4xVL/74/1 + 4xVL/75/1	**8131064002**		88	6.4x19x11.9-120°(BN)

JURID by Honeywell

© JURID / All rights reserved 2005

© JURID / All rights reserved 2005

JURID by Honeywell

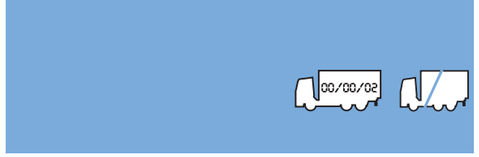

Volvo...

F12...

Ⓞ : Z Cam	86-94	•	1993801820 1993809580 1993809530	1909001230 1909001230 1909001230	410	173.2x18.0/13.4x176.2		19090	8 x 19090	8xVL/87/2	8158056002	810635J	112	6.35x15.88x11.9-145°
	86-94	•	1993901820 1993909580 1993909530	1907101230 1907101230 1907101230	410	198.2x18.0/13.4x176.2		19071	8 x 19071	8xVL/88/2	8158056002	810635J	112	6.35x15.88x11.9-145°
	76-86	•	1956209530	1956201230	394	203.4x18.5/11.1x192 203.4x18.5/14.3x147		19562 19563	4x19562 + 4x19563	4xVL/76/1 + 4xVL/77/1	8131064002		84	6.4x19x11.9-120°(BN)
	76-86	•	1979909580 1979909530	1979901230 1979901230	394	254x19.0/14.7x147 254x19.0/11.5x198		19799 19800	4x19799 + 4x19800	4xVL/82/1 + 4xVL/81/1	8158057002	810635J	84	6.35x15.88x11.9-150°(L10/10-10)
	76-86	•		1766401820 1766409530	413	127x19.1/11.6x200 127x19.1/14.8x160		17664 17665	4x17664 + 4x17665	4xVL/71/1 + 4xVL/70/1	8131064002		72	6.4x19x11.9-120°(BN)
	76-86	•		1988501820 1988509530	394	240x19.0/11.5x198 240x19.0/15.0x147		19885 19886	4x19885 + 4x19886	4xVL/83/1 + 4xVL/84/1	8131064002		84	6.4x19x11.9-120°(BN)
Ⓞ : Z Cam	86-94	•	1993801820 1993809580 1993809530	1909001230 1909001230 1909001230	410	173.2x18.0/13.4x176.2		19090	8 x 19090	8xVL/87/2	8158056002	810635J	112	6.35x15.88x11.9-145°
	86-94	•	1993901820 1993909580 1993909530	1907101230 1907101230 1907101230	410	198.2x18.0/13.4x176.2		19071	8 x 19071	8xVL/88/2	8158056002	810635J	112	6.35x15.88x11.9-145°
	86-94	•	1994001820 1994009580 1994009530	1906801230 1906801230 1906801230	410	223.2x18.0/13.4x176.2		19068	8 x 19068	8xVL/89/2	8158056002	810635J	112	6.35x15.88x11.9-145°
	86-94	•		1799201820	410	125x18.5/14.4x178		17992	8x17992	8xVL/85/1	8158056001	810635J	64	6.35x14.29x11.9-150°(L9/10-9)

F16

Ⓞ : Z Cam	86-94	• •	1994109580 1994109530	1994101820 1994101230 1994101230	410	150x17.9/13.0x178		19941	8x19941	8xVL/86/1	8158056001	810635J	96	6.35x14.29x11.9-150°(L9/10-9)
	86-94	•	1993801820 1993809580 1993809530	1909001230 1909001230 1909001230	410	173.2x18.0/13.4x176.2		19090	8 x 19090	8xVL/87/2	8158056002	810635J	112	6.35x15.88x11.9-145°
	86-94	•	1993901820 1993909580 1993909530	1907101230 1907101230 1907101230	410	198.2x18.0/13.4x176.2		19071	8 x 19071	8xVL/88/2	8158056002	810635J	112	6.35x15.88x11.9-145°
	86-94	•	1993801820 1993809580 1993809530	1909001230 1909001230 1909001230	410	173.2x18.0/13.4x176.2		19090	8 x 19090	8xVL/87/2	8158056002	810635J	112	6.35x15.88x11.9-145°
	86-94	•	1993901820 1993909580 1993909530	1907101230 1907101230 1907101230	410	198.2x18.0/13.4x176.2		19071	8 x 19071	8xVL/88/2	8158056002	810635J	112	6.35x15.88x11.9-145°
	86-94	•	1994001820 1994009580 1994009530	1906801230 1906801230 1906801230	410	223.2x18.0/13.4x176.2		19068	8 x 19068	8xVL/89/2	8158056002	810635J	112	6.35x15.88x11.9-145°
	86-94	•		1799201820	410	125x18.5/14.4x178		17992	8x17992	8xVL/85/1	8158056001	810635J	64	6.35x14.29x11.9-150°(L9/10-9)

F4

406, 407, 408	75-	•		1782905380 1782909530	310	100x9.5x245 100x9.5x209		17829 17830	2x17829 + 2x17830	2xBT/76/1 + 2xSA/25/1	8102050009	810500J	56	5x13x9.5-180°
	75-	•		1783105380	310	125x10.0x209 125x10.0x245		17831 17832	2x17831 + 2x17832	2xSA/27/1 + 2xSA/26/1	8102050009	810500J	64	5x13x9.5-180°

F6

607, 608, 609, 610, 610A	75-	•		1782705380 1782709530	325	120x12.5x251 120x12.5x209		17827 17828	2x17827 + 2x17828	2xSA/28/1 + 2xSA/29/1	8102050009	810500J	60	5x13x9.5-180°
	75-	•		1962005380	325	150x12.5x209.4 150x12.5x251.3		19620 19621	2x19620 + 2x19621	2xSA/30/1 + 2xSA/31/1	8102050009	810500J	64	5x13x9.5-180°

JURID by Honeywell

© JURID / All rights reserved 2005

© JURID / All rights reserved 2005

JURID by Honeywell

Volvo…

F6…

611, 612, 612A, 613, 613A, 614	75-	•			**1780401820**	394	127x12.7x354		17804	4x17804	4xDO/80/2	**8102060005**		64	6x13.5x12-180°
	75-		•		**1962203320**	394	152x12.7x354		19622	4x19622	4xLH/82/2	**8102060004**		64	6x13.5x11-180°
615S, 615SA, 616S, 616SA, 617S, 617SA	70-	•	•	**1938509580**	**1938505380**	381	177.80x18x189.06	**587029J**	19384 19385	6x19384 + 2x19385	6xCW/4/1 + 2xCW/4/2				

F7

Stopmaster	77-		•	**1954209580**		381	200x19.2/11.9x183		19542	8x19542	8xRW/25/1	**8158056001**	**810635J**	96	6.35x14.29x11.9-150°(L9/10-9)
4x2,6x2,6x4	77-86	•		**1946709580** **1946709530**	**1946701230** **1946701230**	394	178x19.1/11.7x192 178x19.1/14.8x147		19467 19468	4x19467 + 4x19468	4xVL/73/1 + 4xVL/72/1	**8131064002**		84	6.4x19x11.9-120°(BN)
	77-86	•			**1956009530**	413	152.6x18.5/11.1x200 152.6x18.5/14.2x160		19560 19561	4x19560 + 4x19561	4xVL/74/1 + 4xVL/75/1	**8131064002**		88	6.4x19x11.9-120°(BN)
4x2	86-94	•		**1993801820** **1993809580** **1993809530**	**1909001230** **1909001230** **1909001230**	410	173.2x18.0/13.4x176.2		19090	8 x 19090	8xVL/87/2	**8158056002**	**810635J**	112	6.35x15.88x11.9-145°
	86-94	•		**1994109580** **1994109530**	**1994101820** **1994101230** **1994101230**	410	150x17.9/13.0x178		19941	8x19941	8xVL/86/1	**8158056001**	**810635J**	96	6.35x14.29x11.9-150°(L9/10-9)
4x2,6x2,6x4	77-86		•	**1956209530**	**1956201230**	394	203.4x18.5/11.1x192 203.4x18.5/14.3x147		19562 19563	4x19562 + 4x19563	4xVL/76/1 + 4xVL/77/1	**8131064002**		84	6.4x19x11.9-120°(BN)
6x2,6x4	77-86		•		**1766401820** **1766409530**	413	127x19.1/11.6x200 127x19.1/14.8x160		17664 17665	4x17664 + 4x17665	4xVL/71/1 + 4xVL/70/1	**8131064002**		72	6.4x19x11.9-120°(BN)
4x2	86-94		•	**1993901820** **1993909580** **1993909530**	**1907101230** **1907101230** **1907101230**	410	198.2x18.0/13.4x176.2		19071	8 x 19071	8xVL/88/2	**8158056002**	**810635J**	112	6.35x15.88x11.9-145°

F8

F/N84, F85 **86, 88, 89, G89**(⊶ *: Unilex)*	66-78		•	**1946709580** **1946709530**	**1946701230** **1946701230**	394	178x19.1/11.7x192 178x19.1/14.8x147		19467 19468	4x19467 + 4x19468	4xVL/73/1 + 4xVL/72/1	**8131064002**		84	6.4x19x11.9-120°(BN)
86, 88, 89, G89(⊶ *: Unilex)*	66-78	•	•		**1766401820** **1766409530**	413	127x19.1/11.6x200 127x19.1/14.8x160		17664 17665	4x17664 + 4x17665	4xVL/71/1 + 4xVL/70/1	**8131064002**		72	6.4x19x11.9-120°(BN)
	66-78	•			**1956009530**	413	152.6x18.5/11.1x200 152.6x18.5/14.2x160		19560 19561	4x19560 + 4x19561	4xVL/74/1 + 4xVL/75/1	**8131064002**		88	6.4x19x11.9-120°(BN)
86, 88, 89, G89	75-78	•			**1956009530**	413	152.6x18.5/11.1x200 152.6x18.5/14.2x160		19560 19561	4x19560 + 4x19561	4xVL/74/1 + 4xVL/75/1	**8131064002**		88	6.4x19x11.9-120°(BN)
	75-78		•	**1956209530**	**1956201230**	394	203.4x18.5/11.1x192 203.4x18.5/14.3x147		19562 19563	4x19562 + 4x19563	4xVL/76/1 + 4xVL/77/1	**8131064002**		84	6.4x19x11.9-120°(BN)
	75-78		•		**1766401820** **1766409530**	413	127x19.1/11.6x200 127x19.1/14.8x160		17664 17665	4x17664 + 4x17665	4xVL/71/1 + 4xVL/70/1	**8131064002**		72	6.4x19x11.9-120°(BN)
F/N84, F85	66-78	•			**1766401820** **1766409530**	413	127x19.1/11.6x200 127x19.1/14.8x160		17664 17665	4x17664 + 4x17665	4xVL/71/1 + 4xVL/70/1	**8131064002**		72	6.4x19x11.9-120°(BN)

FH10

(○) : Z Cam	86-94	•	•	**1994109580** **1994109530**	**1994101820** **1994101230** **1994101230**	410	150x17.9/13.0x178		19941	8x19941	8xVL/86/1	**8158056001**	**810635J**	96	6.35x14.29x11.9-150°(L9/10-9)
	86-94	•		**1993801820** **1993809580** **1993809530**	**1909001230** **1909001230** **1909001230**	410	173.2x18.0/13.4x176.2		19090	8 x 19090	8xVL/87/2	**8158056002**	**810635J**	112	6.35x15.88x11.9-145°
	86-94	•		**1993901820** **1993909580** **1993909530**	**1907101230** **1907101230** **1907101230**	410	198.2x18.0/13.4x176.2		19071	8 x 19071	8xVL/88/2	**8158056002**	**810635J**	112	6.35x15.88x11.9-145°
	86-94		•	**1993801820** **1993809580** **1993809530**	**1909001230** **1909001230** **1909001230**	410	173.2x18.0/13.4x176.2		19090	8 x 19090	8xVL/87/2	**8158056002**	**810635J**	112	6.35x15.88x11.9-145°

© JURID / All rights reserved 2005

© JURID / All rights reserved 2005

Volvo…

FH10…

(O) : Z Cam…	86-94		•	1993901820 1993909580 1993909530	1907101230 1907101230 1907101230		410	198.2x18.0/13.4x176.2		19071	8 x 19071	8xVL/88/2	**8158056002**	**810635J**	112	6.35x15.88x11.9-145°
	86-94		•	1994001820 1994009580 1994009530	1906801230 1906801230 1906801230		410	223.2x18.0/13.4x176.2		19068	8 x 19068	8xVL/89/2	**8158056002**	**810635J**	112	6.35x15.88x11.9-145°
	86-94		•		**1799201820**		410	125x18.5/14.4x178		17992	8x17992	8xVL/85/1	**8158056001**	**810635J**	64	6.35x14.29x11.9-150°(L9/10-9)

FH12

380, 420, 460, 500 *((O) : Lucas/Meritor(D Duco) 22.5")*	00-		•	•		**2912509560**			249.6x29x111		29125	4x29125				
(O) : Z Cam	86-94		•	•	1994109580 1994109530	1994101820 1994101230 1994101230		410	150x17.9/13.0x178		19941	8x19941	8xVL/86/1	**8158056001**	**810635J**	96	6.35x14.29x11.9-150°(L9/10-9)
	86-94		•		1993801820 1993809580 1993809530	1909001230 1909001230 1909001230		410	173.2x18.0/13.4x176.2		19090	8 x 19090	8xVL/87/2	**8158056002**	**810635J**	112	6.35x15.88x11.9-145°
	86-94		•		1993901820 1993909580 1993909530	1907101230 1907101230 1907101230		410	198.2x18.0/13.4x176.2		19071	8 x 19071	8xVL/88/2	**8158056002**	**810635J**	112	6.35x15.88x11.9-145°
	94-		•		1993801820 1993809580 1993809530	1909001230 1909001230 1909001230		410	173.2x18.0/13.4x176.2		19090	8 x 19090	8xVL/87/2	**8158056002**	**810635J**	112	6.35x15.88x11.9-145°
	94-		•		1994109580 1994109530	1994101820 1994101230 1994101230		410	150x17.9/13.0x178		19941	8x19941	8xVL/86/1	**8158056001**	**810635J**	96	6.35x14.29x11.9-150°(L9/10-9)
	86-94		•		1993801820 1993809580 1993809530	1909001230 1909001230 1909001230		410	173.2x18.0/13.4x176.2		19090	8 x 19090	8xVL/87/2	**8158056002**	**810635J**	112	6.35x15.88x11.9-145°
	86-94		•		1993901820 1993909580 1993909530	1907101230 1907101230 1907101230		410	198.2x18.0/13.4x176.2		19071	8 x 19071	8xVL/88/2	**8158056002**	**810635J**	112	6.35x15.88x11.9-145°
	86-94		•		1994001820 1994009580 1994009530	1906801230 1906801230 1906801230		410	223.2x18.0/13.4x176.2		19068	8 x 19068	8xVL/89/2	**8158056002**	**810635J**	112	6.35x15.88x11.9-145°
	86-94		•			**1799201820**		410	125x18.5/14.4x178		17992	8x17992	8xVL/85/1	**8158056001**	**810635J**	64	6.35x14.29x11.9-150°(L9/10-9)
	94-		•		1993801820 1993809580 1993809530	1909001230 1909001230 1909001230		410	173.2x18.0/13.4x176.2		19090	8 x 19090	8xVL/87/2	**8158056002**	**810635J**	112	6.35x15.88x11.9-145°
	94-		•		1993901820 1993909580 1993909530	1907101230 1907101230 1907101230		410	198.2x18.0/13.4x176.2		19071	8 x 19071	8xVL/88/2	**8158056002**	**810635J**	112	6.35x15.88x11.9-145°
	94-		•		1994001820 1994009580 1994009530	1906801230 1906801230 1906801230		410	223.2x18.0/13.4x176.2		19068	8 x 19068	8xVL/89/2	**8158056002**	**810635J**	112	6.35x15.88x11.9-145°
	94-		•			**1799201820**		410	125x18.5/14.4x178		17992	8x17992	8xVL/85/1	**8158056001**	**810635J**	64	6.35x14.29x11.9-150°(L9/10-9)

FH16

520 *((O) : Lucas/Meritor(D Duco) 22.5")*	00-		•	•		**2912509560**			249.6x29x111		29125	4x29125				
(O) : Z Cam	86-94		•	•	1994109580 1994109530	1994101820 1994101230 1994101230		410	150x17.9/13.0x178		19941	8x19941	8xVL/86/1	**8158056001**	**810635J**	96	6.35x14.29x11.9-150°(L9/10-9)
	86-94		•		1993801820 1993809580 1993809530	1909001230 1909001230 1909001230		410	173.2x18.0/13.4x176.2		19090	8 x 19090	8xVL/87/2	**8158056002**	**810635J**	112	6.35x15.88x11.9-145°

© JURID / All rights reserved 2005

© JURID / All rights reserved 2005

			STOCK	STOCK	⌀ mm				WVA	BFMC	JURID	SUPASET	#				

Volvo…

…

FH16…

(O) : Z Cam…	86-94	•	**1993901820 1993909580 1993909530**	**1907101230 1907101230 1907101230**	410	198.2x18.0/13.4x176.2		19071	8 x 19071	8xVL/88/2	**8158056002**	**810635J**	112	6.35x15.88x11.9-145°
	94-	•	**1993801820 1993809580 1993809530**	**1909001230 1909001230 1909001230**	410	173.2x18.0/13.4x176.2		19090	8 x 19090	8xVL/87/2	**8158056002**	**810635J**	112	6.35x15.88x11.9-145°
	94-	•	**1994109580 1994109530**	**1994101820 1994101230 1994101230**	410	150x17.9/13.0x178		19941	8x19941	8xVL/86/1	**8158056001**	**810635J**	96	6.35x14.29x11.9-150°(L9/10-9)
	86-94	•	**1993801820 1993809580 1993809530**	**1909001230 1909001230 1909001230**	410	173.2x18.0/13.4x176.2		19090	8 x 19090	8xVL/87/2	**8158056002**	**810635J**	112	6.35x15.88x11.9-145°
	86-94	•	**1993901820 1993909580 1993909530**	**1907101230 1907101230 1907101230**	410	198.2x18.0/13.4x176.2		19071	8 x 19071	8xVL/88/2	**8158056002**	**810635J**	112	6.35x15.88x11.9-145°
	86-94	•	**1994001820 1994009580 1994009530**	**1906801230 1906801230 1906801230**	410	223.2x18.0/13.4x176.2		19068	8 x 19068	8xVL/89/2	**8158056002**	**810635J**	112	6.35x15.88x11.9-145°
	86-94	•		**1799201820**	410	125x18.5/14.4x178		17992	8x17992	8xVL/85/1	**8158056001**	**810635J**	64	6.35x14.29x11.9-150°(L9/10-9)
	94-	•	**1993801820 1993809580 1993809530**	**1909001230 1909001230 1909001230**	410	173.2x18.0/13.4x176.2		19090	8 x 19090	8xVL/87/2	**8158056002**	**810635J**	112	6.35x15.88x11.9-145°
	94-	•	**1993901820 1993909580 1993909530**	**1907101230 1907101230 1907101230**	410	198.2x18.0/13.4x176.2		19071	8 x 19071	8xVL/88/2	**8158056002**	**810635J**	112	6.35x15.88x11.9-145°
	94-	•	**1994001820 1994009580 1994009530**	**1906801230 1906801230 1906801230**	410	223.2x18.0/13.4x176.2		19068	8 x 19068	8xVL/89/2	**8158056002**	**810635J**	112	6.35x15.88x11.9-145°
	94-	•		**1799201820**	410	125x18.5/14.4x178		17992	8x17992	8xVL/85/1	**8158056001**	**810635J**	64	6.35x14.29x11.9-150°(L9/10-9)

FH7

(O) : Z Cam	86-94	•	•	**1994109580 1994109530**	**1994101820 1994101230 1994101230**	410	150x17.9/13.0x178		19941	8x19941	8xVL/86/1	**8158056001**	**810635J**	96	6.35x14.29x11.9-150°(L9/10-9)
	86-94	•		**1993801820 1993809580 1993809530**	**1909001230 1909001230 1909001230**	410	173.2x18.0/13.4x176.2		19090	8 x 19090	8xVL/87/2	**8158056002**	**810635J**	112	6.35x15.88x11.9-145°
	86-94	•		**1993901820 1993909580 1993909530**	**1907101230 1907101230 1907101230**	410	198.2x18.0/13.4x176.2		19071	8 x 19071	8xVL/88/2	**8158056002**	**810635J**	112	6.35x15.88x11.9-145°
	86-94	•		**1993801820 1993809580 1993809530**	**1909001230 1909001230 1909001230**	410	173.2x18.0/13.4x176.2		19090	8 x 19090	8xVL/87/2	**8158056002**	**810635J**	112	6.35x15.88x11.9-145°
	86-94	•		**1993901820 1993909580 1993909530**	**1907101230 1907101230 1907101230**	410	198.2x18.0/13.4x176.2		19071	8 x 19071	8xVL/88/2	**8158056002**	**810635J**	112	6.35x15.88x11.9-145°
	86-94	•		**1994001820 1994009580 1994009530**	**1906801230 1906801230 1906801230**	410	223.2x18.0/13.4x176.2		19068	8 x 19068	8xVL/89/2	**8158056002**	**810635J**	112	6.35x15.88x11.9-145°
	86-94	•			**1799201820**	410	125x18.5/14.4x178		17992	8x17992	8xVL/85/1	**8158056001**	**810635J**	64	6.35x14.29x11.9-150°(L9/10-9)

FL10

(O) : Z Cam	86-94	•	•	**1994109580 1994109530**	**1994101820 1994101230 1994101230**	410	150x17.9/13.0x178		19941	8x19941	8xVL/86/1	**8158056001**	**810635J**	96	6.35x14.29x11.9-150°(L9/10-9)
	86-94	•		**1993801820 1993809580 1993809530**	**1909001230 1909001230 1909001230**	410	173.2x18.0/13.4x176.2		19090	8 x 19090	8xVL/87/2	**8158056002**	**810635J**	112	6.35x15.88x11.9-145°

© JURID / All rights reserved 2005

© JURID / All rights reserved 2005

Volvo...

FL10...

(O) : Z Cam...	86-94	•	1993901820 1993909580 1993909530	1907101230 1907101230 1907101230	410	198.2x18.0/13.4x176.2		19071	8 x 19071	8xVL/88/2	8158056002	810635J	112	6.35x15.88x11.9-145°
	94-	•	1993801820 1993809580 1993809530	1909001230 1909001230 1909001230	410	173.2x18.0/13.4x176.2		19090	8 x 19090	8xVL/87/2	8158056002	810635J	112	6.35x15.88x11.9-145°
	94-	•	1994109580 1994109530	1994101820 1994101230 1994101230	410	150x17.9/13.0x178		19941	8x19941	8xVL/86/1	8158056001	810635J	96	6.35x14.29x11.9-150°(L9/10-9)
	86-94	•	1993801820 1993809580 1993809530	1909001230 1909001230 1909001230	410	173.2x18.0/13.4x176.2		19090	8 x 19090	8xVL/87/2	8158056002	810635J	112	6.35x15.88x11.9-145°
	86-94	•	1993901820 1993909580 1993909530	1907101230 1907101230 1907101230	410	198.2x18.0/13.4x176.2		19071	8 x 19071	8xVL/88/2	8158056002	810635J	112	6.35x15.88x11.9-145°
	86-94	•	1994001820 1994009580 1994009530	1906801230 1906801230 1906801230	410	223.2x18.0/13.4x176.2		19068	8 x 19068	8xVL/89/2	8158056002	810635J	112	6.35x15.88x11.9-145°
	86-94	•		1799201820	410	125x18.5/14.4x178		17992	8x17992	8xVL/85/1	8158056001	810635J	64	6.35x14.29x11.9-150°(L9/10-9)
	94-	•	1993801820 1993809580 1993809530	1909001230 1909001230 1909001230	410	173.2x18.0/13.4x176.2		19090	8 x 19090	8xVL/87/2	8158056002	810635J	112	6.35x15.88x11.9-145°
	94-	•	1993901820 1993909580 1993909530	1907101230 1907101230 1907101230	410	198.2x18.0/13.4x176.2		19071	8 x 19071	8xVL/88/2	8158056002	810635J	112	6.35x15.88x11.9-145°
	94-	•	1994001820 1994009580 1994009530	1906801230 1906801230 1906801230	410	223.2x18.0/13.4x176.2		19068	8 x 19068	8xVL/89/2	8158056002	810635J	112	6.35x15.88x11.9-145°
	94-	•		1799201820	410	125x18.5/14.4x178		17992	8x17992	8xVL/85/1	8158056001	810635J	64	6.35x14.29x11.9-150°(L9/10-9)

FL12

(O) : Z Cam	86-94	•	•	1994109580 1994109530	1994101820 1994101230 1994101230	410	150x17.9/13.0x178		19941	8x19941	8xVL/86/1	8158056001	810635J	96	6.35x14.29x11.9-150°(L9/10-9)
	86-94	•		1993801820 1993809580 1993809530	1909001230 1909001230 1909001230	410	173.2x18.0/13.4x176.2		19090	8 x 19090	8xVL/87/2	8158056002	810635J	112	6.35x15.88x11.9-145°
	86-94	•		1993901820 1993909580 1993909530	1907101230 1907101230 1907101230	410	198.2x18.0/13.4x176.2		19071	8 x 19071	8xVL/88/2	8158056002	810635J	112	6.35x15.88x11.9-145°
	94-	•		1993801820 1993809580 1993809530	1909001230 1909001230 1909001230	410	173.2x18.0/13.4x176.2		19090	8 x 19090	8xVL/87/2	8158056002	810635J	112	6.35x15.88x11.9-145°
	94-	•		1994109580 1994109530	1994101820 1994101230 1994101230	410	150x17.9/13.0x178		19941	8x19941	8xVL/86/1	8158056001	810635J	96	6.35x14.29x11.9-150°(L9/10-9)
	86-94	•		1993801820 1993809580 1993809530	1909001230 1909001230 1909001230	410	173.2x18.0/13.4x176.2		19090	8 x 19090	8xVL/87/2	8158056002	810635J	112	6.35x15.88x11.9-145°
	86-94	•		1993901820 1993909580 1993909530	1907101230 1907101230 1907101230	410	198.2x18.0/13.4x176.2		19071	8 x 19071	8xVL/88/2	8158056002	810635J	112	6.35x15.88x11.9-145°
	86-94	•		1994001820 1994009580 1994009530	1906801230 1906801230 1906801230	410	223.2x18.0/13.4x176.2		19068	8 x 19068	8xVL/89/2	8158056002	810635J	112	6.35x15.88x11.9-145°
	86-94	•			1799201820	410	125x18.5/14.4x178		17992	8x17992	8xVL/85/1	8158056001	810635J	64	6.35x14.29x11.9-150°(L9/10-9)

© JURID / All rights reserved 2005
© JURID / All rights reserved 2005

Volvo…

FL12…

(O) : Z Cam…	94-	•		1993801820 1993809580 1993809530	1909001230 1909001230 1909001230		410	173.2x18.0/13.4x176.2			19090	8 x 19090	8xVL/87/2	8158056002	810635J	112	6.35x15.88x11.9-145°
	94-	•		1993901820 1993909580 1993909530	1907101230 1907101230 1907101230		410	198.2x18.0/13.4x176.2			19071	8 x 19071	8xVL/88/2	8158056002	810635J	112	6.35x15.88x11.9-145°
	94-	•		1994001820 1994009580 1994009530	1906801230 1906801230 1906801230		410	223.2x18.0/13.4x176.2			19068	8 x 19068	8xVL/89/2	8158056002	810635J	112	6.35x15.88x11.9-145°
	94-	•			1799201820		410	125x18.5/14.4x178			17992	8x17992	8xVL/85/1	8158056001	810635J	64	6.35x14.29x11.9-150°(L9/10-9)
FL4																	
406, 408(5.5t)	85-88	•	•		2906703342 2906709560		322	175.5x22x78	**561919J**		29067	4x29067					
	85-88		•		2906703342 2906709560		322	175.5x22x78	**567150J**		29067	4x29067					
406, 408, 411(5.5t)	85-91	•	•		2930209560			175.5x22x78			29302	4x29302					
	90-	•	•		2906703342 2906709560			175.5x22x78			29067	4x29067					
FL6																	
607, 608, 609, 610(5.2t)	85-94	•	•		2906703342 2906709560		322	175.5x22x78	**561919J**		29067	4x29067					
607, 608, 609, 610(7.2t)	85-94	•			2906703342 2906709560		322	175.5x22x78	**561920J**		29067	4x29067					
	85-94		•		2906703342 2906709560		322	175.5x22x78	**567114J**		29067	4x29067					
607, 608, 609, 610(+ABS)	85-94		•		2906703342 2906709560		322	175.5x22x78	**567151J**		29067	4x29067					
607, 608, 609, 610, 611, 612, 613, 614, 615	88-91	•	•		2930209560			175.5x22x78			29302	4x29302					
607, 608, 609, 610, 611, 612, 613, 614, 615, 618	90-	•	•		2906703342 2906709560			175.5x22x78			29067	4x29067					
611, 612, 613, 614	84-88	•	•		1926903270		360	170x9.3x286 170x13.6/15.1/12.8x356			19269 19272	2x19269 + 2x19272	2xGG/208/1 + 2xGG/207/1	8158056001	810635J	84	6.35x14.29x11.9-150°(L9/10-9)
	88-93	•	•	1954309580	1954301230		360	170x15.0/11.7x176 170x9.6/9.9/9.0x268			19543 19552	4x19543 + 2x19552	4xGG/214/1 + 2xGG/215/1	8158056001	810635J	72	6.35x14.29x11.9-150°(L9/10-9)
612, 613, 614, 615	94-	•	•		1975803270		360	170x14.8/12.1x174 170x9.7/8.2x174			19758 19759	4x19758 + 4x19759	4xGG/235/1 + 4xGG/236/1	8158055001	810635J	112	6.35x12.7x11.9-150°(L8/10-8)
615, 616, 617	85-89	•	•	1938509580	1938505380		381	177.80x18x189.06	587029J		19384 19385	6x19384 + 2x19385	6xCW/4/1 + 2xCW/4/2				
	85-89		•	1938509580	1938505380		381	177.80x18x189.06	587029J		19384 19385	6x19384 + 2x19385	6xCW/4/1 + 2xCW/4/2				
618, 619		•	•	1954209580			381	200x19.2/11.9x183			19542	8x19542	8xRW/25/1	8158056001	810635J	96	6.35x14.29x11.9-150°(L9/10-9)
FL7																	
(O) : Z Cam	86-94	•	•	1994109580 1994109530	1994101820 1994101230 1994101230		410	150x17.9/13.0x178			19941	8x19941	8xVL/86/1	8158056001	810635J	96	6.35x14.29x11.9-150°(L9/10-9)
	86-94	•		1993801820 1993809580 1993809530	1909001230 1909001230 1909001230		410	173.2x18.0/13.4x176.2			19090	8 x 19090	8xVL/87/2	8158056002	810635J	112	6.35x15.88x11.9-145°

© JURID / All rights reserved 2005

© JURID / All rights reserved 2005

				STOCK	STOCK	⌀ mm				WVA	BFMC	JURID	SUPASET	#				
Volvo…																		
FL7…																		
(O) : Z Cam…	86-94	•		**1993901820 1993909580 1993909530**	**1907101230 1907101230 1907101230**		410	198.2x18.0/13.4x176.2		19071	8 x 19071	8xVL/88/2	**8158056002**	**810635J**	112	6.35x15.88x11.9-145°		
	94-	•		**1993801820 1993809580 1993809530**	**1909001230 1909001230 1909001230**		410	173.2x18.0/13.4x176.2		19090	8 x 19090	8xVL/87/2	**8158056002**	**810635J**	112	6.35x15.88x11.9-145°		
	94-	•		**1994109580 1994109530**	**1994101820 1994101230 1994101230**		410	150x17.9/13.0x178		19941	8x19941	8xVL/86/1	**8158056001**	**810635J**	96	6.35x14.29x11.9-150°(L9/10-9)		
	86-94	•		**1993801820 1993809580 1993809530**	**1909001230 1909001230 1909001230**		410	173.2x18.0/13.4x176.2		19090	8 x 19090	8xVL/87/2	**8158056002**	**810635J**	112	6.35x15.88x11.9-145°		
	86-94	•		**1993901820 1993909580 1993909530**	**1907101230 1907101230 1907101230**		410	198.2x18.0/13.4x176.2		19071	8 x 19071	8xVL/88/2	**8158056002**	**810635J**	112	6.35x15.88x11.9-145°		
	86-94	•		**1994001820 1994009580 1994009530**	**1906801230 1906801230 1906801230**		410	223.2x18.0/13.4x176.2		19068	8 x 19068	8xVL/89/2	**8158056002**	**810635J**	112	6.35x15.88x11.9-145°		
	86-94	•			**1799201820**		410	125x18.5/14.4x178		17992	8x17992	8xVL/85/1	**8158056001**	**810635J**	64	6.35x14.29x11.9-150°(L9/10-9)		
	94-	•		**1993801820 1993809580 1993809530**	**1909001230 1909001230 1909001230**		410	173.2x18.0/13.4x176.2		19090	8 x 19090	8xVL/87/2	**8158056002**	**810635J**	112	6.35x15.88x11.9-145°		
	94-	•		**1993901820 1993909580 1993909530**	**1907101230 1907101230 1907101230**		410	198.2x18.0/13.4x176.2		19071	8 x 19071	8xVL/88/2	**8158056002**	**810635J**	112	6.35x15.88x11.9-145°		
	94-	•		**1994001820 1994009580 1994009530**	**1906801230 1906801230 1906801230**		410	223.2x18.0/13.4x176.2		19068	8 x 19068	8xVL/89/2	**8158056002**	**810635J**	112	6.35x15.88x11.9-145°		
	94-	•			**1799201820**		410	125x18.5/14.4x178		17992	8x17992	8xVL/85/1	**8158056001**	**810635J**	64	6.35x14.29x11.9-150°(L9/10-9)		
FLC																		
140, 7.5/8	97-	•	•		**2906703342 2906709560**		322	175.5x22x78		29067	4x29067							
FL																		
6.12 *(O) : Lucas/Meritor(B Duco) 17.5")*	05/00-	•	•		**2913609560**			175.7x29x89.1		29136	4x29136							
6.14, 6.15 *(O) : Lucas/Meritor(C Duco) 19.5")*	05/00-	•	•		**2913709560**			210.15x29x102.4		29137	4x29137							
618 *(O) : Lucas/Meritor(D Duco) 22.5")*	00-	•	•		**2912509560**			249.6x29x111		29125	4x29125							
FM12																		
340, 380, 420 *(O) : Lucas/Meritor(D Duco) 22.5")*	00-	•	•		**2912509560**			249.6x29x111		29125	4x29125							
FM9																		
260, 300, 340, 380 *(O) : Lucas/Meritor(D Duco) 22.5")*	00-	•	•		**2912509560**			249.6x29x111		29125	4x29125							
FS7																		
713	95-	•	•		**1975803270**		360	170x14.8/12.1x174 170x9.7/8.2x174		19758 19759	4x19758 + 4x19759	4xGG/235/1 + 4xGG/236/1	**8158055001**	**810635J**	112	6.35x12.7x11.9-150°(L8/10-8)		
716, 717	92-	•	•	**1949209580**			375	180x19.2/11.9x183		19492	8x19492	8xRW/24/1	**8158056001**	**810635J**	120	6.35x14.29x11.9-150°(L9/10-9)		

© JURID / All rights reserved 2005

© JURID / All rights reserved 2005

Volvo…

FS7…

716, 717, 718, 719	90-	•	•		**2906703342** **2906709560**			175.5x22x78		29067	4x29067					
718, 719	92-	•	•	**1954209580**			381	200x19.2/11.9x183		19542	8x19542	8xRW/25/1	**8158056001**	**810635J**	96	6.35x14.29x11.9-150°(L9/10-9)

N10

Ⓞ : Z Cam	86-94	•	•	**1994109580** **1994109530**	**1994101820** **1994101230** **1994101230**		410	150x17.9/13.0x178		19941	8x19941	8xVL/86/1	**8158056001**	**810635J**	96	6.35x14.29x11.9-150°(L9/10-9)
	86-94	•		**1993801820** **1993809580** **1993809530**	**1909001230** **1909001230** **1909001230**		410	173.2x18.0/13.4x176.2		19090	8 x 19090	8xVL/87/2	**8158056002**	**810635J**	112	6.35x15.88x11.9-145°
	86-94	•		**1993901820** **1993909580** **1993909530**	**1907101230** **1907101230** **1907101230**		410	198.2x18.0/13.4x176.2		19071	8 x 19071	8xVL/88/2	**8158056002**	**810635J**	112	6.35x15.88x11.9-145°
	86-94		•	**1993801820** **1993809580** **1993809530**	**1909001230** **1909001230** **1909001230**		410	173.2x18.0/13.4x176.2		19090	8 x 19090	8xVL/87/2	**8158056002**	**810635J**	112	6.35x15.88x11.9-145°
	86-94		•	**1993901820** **1993909580** **1993909530**	**1907101230** **1907101230** **1907101230**		410	198.2x18.0/13.4x176.2		19071	8 x 19071	8xVL/88/2	**8158056002**	**810635J**	112	6.35x15.88x11.9-145°
	86-94	•		**1994001820** **1994009580** **1994009530**	**1906801230** **1906801230** **1906801230**		410	223.2x18.0/13.4x176.2		19068	8 x 19068	8xVL/89/2	**8158056002**	**810635J**	112	6.35x15.88x11.9-145°
	86-94	•			**1799201820**		410	125x18.5/14.4x178		17992	8x17992	8xVL/85/1	**8158056001**	**810635J**	64	6.35x14.29x11.9-150°(L9/10-9)

N12

Ⓞ : Z Cam	86-94	•	•	**1994109580** **1994109530**	**1994101820** **1994101230** **1994101230**		410	150x17.9/13.0x178		19941	8x19941	8xVL/86/1	**8158056001**	**810635J**	96	6.35x14.29x11.9-150°(L9/10-9)
	86-94	•		**1993801820** **1993809580** **1993809530**	**1909001230** **1909001230** **1909001230**		410	173.2x18.0/13.4x176.2		19090	8 x 19090	8xVL/87/2	**8158056002**	**810635J**	112	6.35x15.88x11.9-145°
	86-94	•		**1993901820** **1993909580** **1993909530**	**1907101230** **1907101230** **1907101230**		410	198.2x18.0/13.4x176.2		19071	8 x 19071	8xVL/88/2	**8158056002**	**810635J**	112	6.35x15.88x11.9-145°
	86-94		•	**1993801820** **1993809580** **1993809530**	**1909001230** **1909001230** **1909001230**		410	173.2x18.0/13.4x176.2		19090	8 x 19090	8xVL/87/2	**8158056002**	**810635J**	112	6.35x15.88x11.9-145°
	86-94		•	**1993901820** **1993909580** **1993909530**	**1907101230** **1907101230** **1907101230**		410	198.2x18.0/13.4x176.2		19071	8 x 19071	8xVL/88/2	**8158056002**	**810635J**	112	6.35x15.88x11.9-145°
	86-94	•		**1994001820** **1994009580** **1994009530**	**1906801230** **1906801230** **1906801230**		410	223.2x18.0/13.4x176.2		19068	8 x 19068	8xVL/89/2	**8158056002**	**810635J**	112	6.35x15.88x11.9-145°
	86-94	•			**1799201820**		410	125x18.5/14.4x178		17992	8x17992	8xVL/85/1	**8158056001**	**810635J**	64	6.35x14.29x11.9-150°(L9/10-9)

N7

Ⓞ : Z Cam	86-94	•	•	**1994109580** **1994109530**	**1994101820** **1994101230** **1994101230**		410	150x17.9/13.0x178		19941	8x19941	8xVL/86/1	**8158056001**	**810635J**	96	6.35x14.29x11.9-150°(L9/10-9)
	86-94	•		**1993801820** **1993809580** **1993809530**	**1909001230** **1909001230** **1909001230**		410	173.2x18.0/13.4x176.2		19090	8 x 19090	8xVL/87/2	**8158056002**	**810635J**	112	6.35x15.88x11.9-145°
	86-94	•		**1993901820** **1993909580** **1993909530**	**1907101230** **1907101230** **1907101230**		410	198.2x18.0/13.4x176.2		19071	8 x 19071	8xVL/88/2	**8158056002**	**810635J**	112	6.35x15.88x11.9-145°

© JURID / All rights reserved 2005

© JURID / All rights reserved 2005

Volvo…

N7…

(O) : Z Cam…	86-94		•	1993801820 1993809580 1993809530	1909001230 1909001230 1909001230	410	173.2x18.0/13.4x176.2		19090	8 x 19090	8xVL/87/2	8158056002	810635J	112	6.35x15.88x11.9-145°
	86-94		•	1993901820 1993909580 1993909530	1907101230 1907101230 1907101230	410	198.2x18.0/13.4x176.2		19071	8 x 19071	8xVL/88/2	8158056002	810635J	112	6.35x15.88x11.9-145°
	86-94		•	1994001820 1994009580 1994009530	1906801230 1906801230 1906801230	410	223.2x18.0/13.4x176.2		19068	8 x 19068	8xVL/89/2	8158056002	810635J	112	6.35x15.88x11.9-145°
	86-94		•		1799201820	410	125x18.5/14.4x178		17992	8x17992	8xVL/85/1	8158056001	810635J	64	6.35x14.29x11.9-150°(L9/10-9)

N8

F, F85, N84 86, 88, 89, G89 *(: Unilex)*	66-78		•	1946709580 1946709530	1946701230 1946701230	394	178x19.1/11.7x192 178x19.1/14.8x147		19467 19468	4x19467 + 4x19468	4xVL/73/1 + 4xVL/72/1	8131064002		84	6.4x19x11.9-120°(BN)
86, 88, 89, G89 *(: Unilex)*	66-78	•	•		1766401820 1766409530	413	127x19.1/11.6x200 127x19.1/14.8x160		17664 17665	4x17664 + 4x17665	4xVL/71/1 + 4xVL/70/1	8131064002		72	6.4x19x11.9-120°(BN)
	66-78	•			1956009530	413	152.6x18.5/11.1x200 152.6x18.5/14.2x160		19560 19561	4x19560 + 4x19561	4xVL/74/1 + 4xVL/75/1	8131064002		88	6.4x19x11.9-120°(BN)
86, 88, 89, G89	75-78	•			1956009530	413	152.6x18.5/11.1x200 152.6x18.5/14.2x160		19560 19561	4x19560 + 4x19561	4xVL/74/1 + 4xVL/75/1	8131064002		88	6.4x19x11.9-120°(BN)
	75-78		•	1956209530	1956201230	394	203.4x18.5/11.1x192 203.4x18.5/14.3x147		19562 19563	4x19562 + 4x19563	4xVL/76/1 + 4xVL/77/1	8131064002		84	6.4x19x11.9-120°(BN)
	75-78		•		1766401820 1766409530	413	127x19.1/11.6x200 127x19.1/14.8x160		17664 17665	4x17664 + 4x17665	4xVL/71/1 + 4xVL/70/1	8131064002		72	6.4x19x11.9-120°(BN)
F, F85, N84	66-78	•			1766401820 1766409530	413	127x19.1/11.6x200 127x19.1/14.8x160		17664 17665	4x17664 + 4x17665	4xVL/71/1 + 4xVL/70/1	8131064002		72	6.4x19x11.9-120°(BN)

12R, B10LE	93-	•		1993901820 1993909580		410	200x17.9/13.0x178		19939	8x19939	8xVL/88/1	8158056001	810635J	96	6.35x14.29x11.9-150°(L9/10-9)
	93-		•	1994001820 1994009580		410	225x17.9/13.0x178		19940	8x19940	8xVL/89/1	8158056001	810635J	96	6.35x14.29x11.9-150°(L9/10-9)
	93-		•		1799201820	410	125x18.5/14.4x178		17992	8x17992	8xVL/85/1	8158056001	810635J	64	6.35x14.29x11.9-150°(L9/10-9)
12, B10L	95-	•			2909005391 2909009560	438	249x28x114	567152J	587026J	29090	4x29090				
12 B10L *(Olympian MK 2)*	95-		•	1994001820 1994009580		410	225x17.9/13.0x178			19940	8x19940	8xVL/89/1	8158056001	810635J	96	6.35x14.29x11.9-150°(L9/10-9)
59, 60 B58 *(Single Deck)*	70-	•			1956009530	413	152.6x18.5/11.1x200 152.6x18.5/14.2x160			19560 19561	4x19560 + 4x19561	4xVL/74/1 + 4xVL/75/1	8131064002		88	6.4x19x11.9-120°(BN)
	70-		•	1956209530	1956205450	394	203.4x18.5/11.1x192 203.4x18.5/14.3x147			19562 19563	4x19562 + 4x19563	4xVL/76/1 + 4xVL/77/1	8131064002		84	6.4x19x11.9-120°(BN)
609, 610, B6 *(F)*	77-	•			1782705380 1782909530	325	120x12.5x251 120x12.5x209			17827 17828	2x17827 + 2x17828	2xSA/28/1 + 2xSA/29/1	8102050009	810500J	60	5x13x9.5-180°
	77-		•		1962005380	325	150x12.5x209.4 150x12.5x251.3			19620 19621	2x19620 + 2x19621	2xSA/30/1 + 2xSA/31/1	8102050009	810500J	64	5x13x9.5-180°
B10B, Olympian MK2	86-	•	•	1993801820 1993809580		410	175x17.9/13.0x178			19938	8x19938	8xVL/87/1	8158056001	810635J	96	6.35x14.29x11.9-150°(L9/10-9)
	86-		•	1994001820 1994009580		410	225x17.9/13.0x178			19940	8x19940	8xVL/89/1	8158056001	810635J	96	6.35x14.29x11.9-150°(L9/10-9)
B10L *(Olympian MK 2)*	95-	•		1993801820 1993809580		410	175x17.9/13.0x178			19938	8x19938	8xVL/87/1	8158056001	810635J	96	6.35x14.29x11.9-150°(L9/10-9)

© JURID / All rights reserved 2005

© JURID / All rights reserved 2005

Volvo…

…

B10, B9, C10*(M,R)*	79-	•	•	**1946709580** **1946709530**		394	178x19.1/11.7x192 178x19.1/14.8x147		19467 19468	4x19467 + 4x19468	4xVL/73/1 + 4xVL/72/1	**8131064002**		84	6.4x19x11.9-120°(BN)
	79-	•		**1956209530**	**1956205450**	394	203.4x18.5/11.1x192 203.4x18.5/14.3x147		19562 19563	4x19562 + 4x19563	4xVL/76/1 + 4xVL/77/1	**8131064002**		84	6.4x19x11.9-120°(BN)
	79-		•	**1956209530**	**1956205450**	394	203.4x18.5/11.1x192 203.4x18.5/14.3x147		19562 19563	4x19562 + 4x19563	4xVL/76/1 + 4xVL/77/1	**8131064002**		84	6.4x19x11.9-120°(BN)
	79-		•	**1979909580**	**1979905450**	394	254x19.0/14.7x147 254x19.0/11.5x198		19799 19800	4x19799 + 4x19800	4xVL/82/1 + 4xVL/81/1	**8158057002**	**810635J**	84	6.35x15.88x11.9-150°(L10/10-10)
B55	75-		•		**1974505700** **1974503270**	394	203x18.2/11.8x160		19745	8x19745	8xCS/64/1	**8158056001**	**810635J**	96	6.35x14.29x11.9-150°(L9/10-9)
B57, B58*(Ch.# > 6117)*	66-77	•			**1766401820**	413	127x19.1/11.6x200 127x19.1/14.8x160		17664 17665	4x17664 + 4x17665	4xVL/71/1 + 4xVL/70/1	**8131064002**		72	6.4x19x11.9-120°(BN)
B57, B58*(Ch.# 6118 >)*	77-	•			**1956009530**	413	152.6x18.5/11.1x200 152.6x18.5/14.2x160		19560 19561	4x19560 + 4x19561	4xVL/74/1 + 4xVL/75/1	**8131064002**		88	6.4x19x11.9-120°(BN)
B57, B58	66-		•	**1946709580**	**1946701820**	394	178x19.1/11.7x192 178x19.1/14.8x147		19467 19468	4x19467 + 4x19468	4xVL/73/1 + 4xVL/72/1	**8131064002**		84	6.4x19x11.9-120°(BN)
B6*(FA)*	83-85	•	•	**1938509580**	**1938505380**	381	177.80x18x189.06	**587029J**	19384 19385	6x19384 + 2x19385	6xCW/4/1 + 2xCW/4/2				
B6	86-89	•	•		**1926903270**	360	170x9.3x286 170x13.6/15.1/12.8x356		19269 19272	2x19269 + 2x19272	2xGG/208/1 + 2xGG/207/1	**8158056001**	**810635J**	84	6.35x14.29x11.9-150°(L9/10-9)
	90-94	•	•	**1954309580**		360	170x15.0/11.7x176 170x9.6/9.9/9.0x268		19543 19552	4x19543 + 2x19552	4xGG/214/1 + 2xGG/215/1	**8158056001**	**810635J**	72	6.35x14.29x11.9-150°(L9/10-9)
	94-	•	•		**1975803270**	360	170x14.8/12.1x174 170x9.7/8.2x174		19758 19759	4x19758 + 4x19759	4xGG/235/1 + 4xGG/236/1	**8158055001**	**810635J**	112	6.35x12.7x11.9-150°(L8/10-8)
B6*(FA)*	79-82	•			**1780401820**	394	127x12.7x354		17804	4x17804	4xDO/80/2	**8102060005**		64	6x13.5x12-180°
	79-82		•		**1962203320**	394	152x12.7x354		19622	4x19622	4xLH/82/2	**8102060004**		64	6x13.5x11-180°
B7*(F,FA)*	83-86	•		**1946709580** **1946709530**		394	178x19.1/11.7x192 178x19.1/14.8x147		19467 19468	4x19467 + 4x19468	4xVL/73/1 + 4xVL/72/1	**8131064002**		84	6.4x19x11.9-120°(BN)
	83-86	•			**1956009530**	413	152.6x18.5/11.1x200 152.6x18.5/14.2x160		19560 19561	4x19560 + 4x19561	4xVL/74/1 + 4xVL/75/1	**8131064002**		88	6.4x19x11.9-120°(BN)
B7	87-	•		**1993901820** **1993909580**		410	200x17.9/13.0x178		19939	8x19939	8xVL/88/1	**8158056001**	**810635J**	96	6.35x14.29x11.9-150°(L9/10-9)
	87-	•		**1956209530**	**1956205450**	394	203.4x18.5/11.1x192 203.4x18.5/14.3x147		19562 19563	4x19562 + 4x19563	4xVL/76/1 + 4xVL/77/1	**8131064002**		84	6.4x19x11.9-120°(BN)
	87-	•		**1994109580**	**1994101820**	410	150x17.9/13.0x178		19941	8x19941	8xVL/86/1	**8158056001**	**810635J**	96	6.35x14.29x11.9-150°(L9/10-9)
B7*(F,FA)*	83-86		•	**1956209530**	**1956205450**	394	203.4x18.5/11.1x192 203.4x18.5/14.3x147		19562 19563	4x19562 + 4x19563	4xVL/76/1 + 4xVL/77/1	**8131064002**		84	6.4x19x11.9-120°(BN)
B7	87-		•	**1993801820** **1993809580**		410	175x17.9/13.0x178		19938	8x19938	8xVL/87/1	**8158056001**	**810635J**	96	6.35x14.29x11.9-150°(L9/10-9)
	87-		•	**1994001820** **1994009580**		410	225x17.9/13.0x178		19940	8x19940	8xVL/89/1	**8158056001**	**810635J**	96	6.35x14.29x11.9-150°(L9/10-9)
	87-		•	**1979909580**	**1979905450**	394	254x19.0/14.7x147 254x19.0/11.5x198		19799 19800	4x19799 + 4x19800	4xVL/82/1 + 4xVL/81/1	**8158057002**	**810635J**	84	6.35x15.88x11.9-150°(L10/10-10)

Wabco (Perrot)

(O) : **Wabco***(PAN19-2)* **19.5"**	01-	•	•		**2914209569**		204.6x30x99.6		29142	4x29142							
(O) : **Wabco***(PAN19-1)* **19.5"**	02-	•	•		**2915905399**		210.45x30x92.3		29159	4x29159							

© JURID / All rights reserved 2005

© JURID / All rights reserved 2005

			STOCK	STOCK	⌀ mm			WVA	BFMC	JURID	SUPASET	#	

Wabco (Perrot)...

...

	•	•	2905503010	2905509560		175.8x22x77		29055	4x29055				
(O) : Wabco *(PAN19)* 19.5"	•	•	2912605399	2915905399		210.5x30x92		29126	4x29126				
Iveco	•	•		2900109561		174.4x20x69		29001	4x29001				
	•	•		2901709560		191x23x87		29017	4x29017				
	•	•		2902409561		191x23x87		29024	4x29024				
	•	•		2907705390 2907709561		204x27x106		29077	4x29077				
(O) : Wabco *(PAN17)* 17.5"	•	•		2908809560		175.6x26x85		29088	4x29088				
Iveco	•			2901605440		160x28x111		29016	4x29016				
	•			2901605441 2901609561		160x28x111		29016	8x29016				
		•	2904905590			138x14x82		29049	2x29049				
		•		2905405590		138x11x82		29054	2x29054				
(O) : Wabco *(PAN22-1)* 22.5"		•		2916205399		210.45x31x109.6		29162	4x29162				

Warsteiner Achsen

B 14/06, G 35, G 40, G 45	•		1500405380	300	60x5.0x290		15004	4x15004	4xBC/52/1	8102040003	810400J	64	4x10x7.5-180°
B 18/06, G 40, G 60, GZ 50, GZ 60	•		1504404210	350	60x6.0x339		15044	4x15044	4xFD/85/1	8103060002	810600J	40	6x10x11.5-180°
B 25, B 31, B 35/08, G 55, G 60, GSU 25, GSU 33, GSU 36/08	•		1524705380	400	80x8.0x389		15247	4x15247	4xFD/86/1	8162080001	810800J	40	8x15x15.5-180°
B 80-4216 SN	•		1920004040	420	160x18.0/11.0x204		19200	8x19200	8xBC/35/1	8162080001	810800J	80	8x15x15.5-180°
G 30, G 35	•		1128404210	250	40x5.0x261		11284	4x11284	4xBW/1/1	8102040003	810400J	40	4x10x7.5-180°
S 110-4220 SN, Z 110-4220 SN, Z 80 10D	•	1909409580	1909404040 1909401250	420	200x17.5/10.5x204		19094	8x19094	8xBC/97/1	8162080001	810800J	80	8x15x15.5-180°
S, Z 60, Z 70, Z 80	•	1903209580	1903204040 1903201250	420	180x17.5/10.5x204		19032	8x19032	8xBC/98/1	8162080001	810800J	80	8x15x15.5-180°
Z 100 10TD, Z 60, Z 80	•		1910304040	300	200x10.0x141		19103	8x19103	8xBC/55/1	8162080001	810800J	64	8x15x15.5-180°
Z 60-3015 SN	•		1737704040	420	120x18.0/11.2x204		17377	8x17377	8xBC/78/1	8162080001	810800J	80	8x15x15.5-180°
⊢⊣ : BPW	•	1957409550	1957404040 1957401250	300	200x18.0/11.0x145		19574	8x19574	8xBC/80/1	8162080001	810800J	64	8x15x15.5-180°
	•		1910204040	300	150x10.3x142		19102	8x19102	8xBC/54/1	8162080001	810800J	64	8x15x15.5-180°
	•		1959194040	420	220x17.5/10.5x204		19591	8x19591	8xBC/81/1	8162080001	810800J	80	8x15x15.5-180°
(O) : S Cam	•	1990209580	1990204040 1990201250	360	200x18.6/13.9x159.3 200x18.6/11.5x189.5		19902 19903	4x19902 + 4x19903	4xBC/100/1 + 4xBC/101/1	8162080001	810800J	72	8x15x15.5-180°
5.5t,8t	•		1900545380	430	150x12.3x205		19005	8x19005	8xBC/41/1	8162080002	810800J	64	8x18x15.5-180°
	•		1956804040	300	220x18.0/11.5x139		19568	8x19568		8162080001	810800J	64	8x15x15.5-180°
	•		1957304040	300	150x18.0/12.5x145		19573	8x19573	8xBC/79/1	8162080001	810800J	64	8x15x15.5-180°

© JURID / All rights reserved 2005

© JURID / All rights reserved 2005

Warsteiner Achsen...

...

⦶ : S Cam	•		1995203290	360	160x18.6/11.1x190 160x18.6/14.0x159		19952 19953	4x19952 + 4x19953	4xBC/104/1 + BC/105/1	8162080001	810800J	72	8x15x15.5-180°

York Trailers

10t Axles

10, 11, 15, 24, 40-60, 48, 5, 52, 54, 6	•		1907203320 1907209530	394	152x12.7x362		19072	4x19072	4xGG/83/1	8158056001	810635J	48	6.35x14.29x11.9-150°(L9/10-9)
23	•	1903609552	1903604042 1903601232	419	178x18.6/16.7x188 178x18.2/11.5x194		19036 19037	4x19036 + 4x19037	4xIL/66/3 + 4xIL/67/3	8158057001	810635J	96	6.35x15.88x11.9-150°(L10/10-10)
33, 34*(10 holes,6 holes)*	•		1936904040	419	219x18.5/10.5x196 219x18.6/15.2x190		19369 19370	4x19369 + 4x19370	4xFU/4/2 + 4xFU/5/2	8158057001	810635J	96	6.35x15.88x11.9-150°(L10/10-10)
37, 39	•		1933309550	394	177.8x16.6/4.4x196 177.8x16.6/13.5x196		19333 19334	4x19333 + 4x19334	4xYK/7/2 + 4xYK/6/2	8158057002	810635J	96	6.35x15.88x11.9-150°(L10/10-10)
47	•		1911109530	394	177.8x12.7x358.4		19111	4x19111	4xGG/92/1	8158056001	810635J	72	6.35x14.29x11.9-150°(L9/10-9)
56, 57	•		1946109550	394	209x16.6/4.4x196 209x16.6/13.5x196		19461 19462	4x19461 + 4x19462	4xYK/9/3 + 4xYK/8/3	8158044002	810476J	128	4.76x15.88x9.32-150°(8-10)

8t Axles

2, 21, 22, 25, 39, 44	•		1907203320 1907209530	394	152x12.7x362		19072	4x19072	4xGG/83/1	8158056001	810635J	48	6.35x14.29x11.9-150°(L9/10-9)
8	•	1903609552	1903604042 1903601232	419	178x18.6/16.7x188 178x18.2/11.5x194		19036 19037	4x19036 + 4x19037	4xIL/66/3 + 4xIL/67/3	8158057001	810635J	96	6.35x15.88x11.9-150°(L10/10-10)

10t Axles

10, 11, 15, 24, 40-60, 48, 5, 52, 54, 6	•		1907203320 1907209530	394	152x12.7x362		19072	4x19072	4xGG/83/1	8158056001	810635J	48	6.35x14.29x11.9-150°(L9/10-9)
23	•	1903609552	1903604042 1903601232	419	178x18.6/16.7x188 178x18.2/11.5x194		19036 19037	4x19036 + 4x19037	4xIL/66/3 + 4xIL/67/3	8158057001	810635J	96	6.35x15.88x11.9-150°(L10/10-10)
33, 34*(10 holes,6 holes)*	•		1936904040	419	219x18.5/10.5x196 219x18.6/15.2x190		19369 19370	4x19369 + 4x19370	4xFU/4/2 + 4xFU/5/2	8158057001	810635J	96	6.35x15.88x11.9-150°(L10/10-10)
37, 39	•		1933309550	394	177.8x16.6/4.4x196 177.8x16.6/13.5x196		19333 19334	4x19333 + 4x19334	4xYK/7/2 + 4xYK/6/2	8158057002	810635J	96	6.35x15.88x11.9-150°(L10/10-10)
47	•		1911109530	394	177.8x12.7x358.4		19111	4x19111	4xGG/92/1	8158056001	810635J	72	6.35x14.29x11.9-150°(L9/10-9)
56, 57	•		1946109550	394	209x16.6/4.4x196 209x16.6/13.5x196		19461 19462	4x19461 + 4x19462	4xYK/9/3 + 4xYK/8/3	8158044002	810476J	128	4.76x15.88x9.32-150°(8-10)

8t Axles

2, 21, 22, 25, 39, 44	•		1907203320 1907209530	394	152x12.7x362		19072	4x19072	4xGG/83/1	8158056001	810635J	48	6.35x14.29x11.9-150°(L9/10-9)
8	•	1903609552	1903604042 1903601232	419	178x18.6/16.7x188 178x18.2/11.5x194		19036 19037	4x19036 + 4x19037	4xIL/66/3 + 4xIL/67/3	8158057001	810635J	96	6.35x15.88x11.9-150°(L10/10-10)

Big Chief Tipper Trailers

BC 24*(tipper 19.75t)*	69-74	•		1946109550	394	209x16.6/4.4x196 209x16.6/13.5x196		19461 19462	4x19461 + 4x19462	4xYK/9/3 + 4xYK/8/3	8158044002	810476J	128	4.76x15.88x9.32-150°(8-10)
BC 28, BC 30, BC 32, BC 34, GEB 4 *(tipper)*	67-74	•		1933309550	394	177.8x16.6/4.4x196 177.8x16.6/13.5x196		19333 19334	4x19333 + 4x19334	4xYK/7/2 + 4xYK/6/2	8158057002	810635J	96	6.35x15.88x11.9-150°(L10/10-10)

© JURID / All rights reserved 2005

© JURID / All rights reserved 2005

York Trailers...

City Van Trailers														
12 XTL, 12 XTL/P, 12 XTS, 12 XTS/P, 14 XTL, 14 XTL/P, 14 XTS, 14 XTS/P, 16 XTL, 16 XTL/P, 16 XTS, 16 XTS/P	67-	•	**1933309550**	394	177.8x16.6/4.4x196 177.8x16.6/13.5x196		19333 19334	4x19333 + 4x19334	4xYK/7/2 + 4xYK/6/2	**8158057002**	**810635J**	96	6.35x15.88x11.9-150°(L10/10-10)
Coil Carrying Trailers														
34 CC/WS, SL 24 CC	72-	•	**1946109550**	394	209x16.6/4.4x196 209x16.6/13.5x196		19461 19462	4x19461 + 4x19462	4xYK/9/3 + 4xYK/8/3	**8158044002**	**810476J**	128	4.76x15.88x9.32-150°(8-10)
SL 30 L, SL 30 S, SL 32 L, SL 32 N, SL 32 S, SL 32/3, ST 30 L, ST 30 S, ST 32 L, ST 32 N, ST 32 S, ST 32/3	69-	•	**1933309550**	394	177.8x16.6/4.4x196 177.8x16.6/13.5x196		19333 19334	4x19333 + 4x19334	4xYK/7/2 + 4xYK/6/2	**8158057002**	**810635J**	96	6.35x15.88x11.9-150°(L10/10-10)
ST 2 D/L, ST 2 D/M, ST 2 DS	67-	•	**1933309550**	394	177.8x16.6/4.4x196 177.8x16.6/13.5x196		19333 19334	4x19333 + 4x19334	4xYK/7/2 + 4xYK/6/2	**8158057002**	**810635J**	96	6.35x15.88x11.9-150°(L10/10-10)
Container Trailers														
PSK 24, PSK 34, PSK 42, PSK 44, SK 24, SK 34, SK 42, SK 44	69-74	•	**1946109550**	394	209x16.6/4.4x196 209x16.6/13.5x196		19461 19462	4x19461 + 4x19462	4xYK/9/3 + 4xYK/8/3	**8158044002**	**810476J**	128	4.76x15.88x9.32-150°(8-10)
PSK 28, PSK 30, PSK 32, SK 28, SK 30, SK 32	69-74	•	**1933309550**	394	177.8x16.6/4.4x196 177.8x16.6/13.5x196		19333 19334	4x19333 + 4x19334	4xYK/7/2 + 4xYK/6/2	**8158057002**	**810635J**	96	6.35x15.88x11.9-150°(L10/10-10)
Drawbar Trailers														
DB 14, DB 16*(16.5t)*	69-74	•	**1907203320** **1907209530**	394	152x12.7x362		19072	4x19072	4xGG/83/1	**8158056001**	**810635J**	48	6.35x14.29x11.9-150°(L9/10-9)
DB 20/4, DB 26/6, FDB 15, FDB 16	69-	•	**1933309550**	394	177.8x16.6/4.4x196 177.8x16.6/13.5x196		19333 19334	4x19333 + 4x19334	4xYK/7/2 + 4xYK/6/2	**8158057002**	**810635J**	96	6.35x15.88x11.9-150°(L10/10-10)
FDB 20	75-	•	**1946109550**	394	209x16.6/4.4x196 209x16.6/13.5x196		19461 19462	4x19461 + 4x19462	4xYK/9/3 + 4xYK/8/3	**8158044002**	**810476J**	128	4.76x15.88x9.32-150°(8-10)
Drop Frame														
FD 18*(15t,20t)*	69-74	•	**1933309550**	394	177.8x16.6/4.4x196 177.8x16.6/13.5x196		19333 19334	4x19333 + 4x19334	4xYK/7/2 + 4xYK/6/2	**8158057002**	**810635J**	96	6.35x15.88x11.9-150°(L10/10-10)
Freightmaster Van Drop Deck														
EB 26, EB 32, EB 32/3, IB 26, IB 32, IB 32/3 **EB 20, IB20, ID 20***(17t)* **EB 16, IB 16, ID 16***(13t)* **EB 18, IB 18, ID 18***(15t)*	69-	•	**1933309550**	394	177.8x16.6/4.4x196 177.8x16.6/13.5x196		19333 19334	4x19333 + 4x19334	4xYK/7/2 + 4xYK/6/2	**8158057002**	**810635J**	96	6.35x15.88x11.9-150°(L10/10-10)
EB 24, EB 34, EB 38, EB 42, EB 44, IB 24, IB 34, IB 38, IB 42, IB 44	69-	•	**1946109550**	394	209x16.6/4.4x196 209x16.6/13.5x196		19461 19462	4x19461 + 4x19462	4xYK/9/3 + 4xYK/8/3	**8158044002**	**810476J**	128	4.76x15.88x9.32-150°(8-10)
IB 15, ID 15	75-	•	**1933309550**	394	177.8x16.6/4.4x196 177.8x16.6/13.5x196		19333 19334	4x19333 + 4x19334	4xYK/7/2 + 4xYK/6/2	**8158057002**	**810635J**	96	6.35x15.88x11.9-150°(L10/10-10)
ID 4/4P **ID 20***(14t)*	67-	•	**1907203320** **1907209530**	394	152x12.7x362		19072	4x19072	4xGG/83/1	**8158056001**	**810635J**	48	6.35x14.29x11.9-150°(L9/10-9)
Glass Reinforced Plastic Models														
GP 24, GP 34		•	**1946109550**	394	209x16.6/4.4x196 209x16.6/13.5x196		19461 19462	4x19461 + 4x19462	4xYK/9/3 + 4xYK/8/3	**8158044002**	**810476J**	128	4.76x15.88x9.32-150°(8-10)
Lightweight Platform Trailers														
M 18, M 20, M 26, M 28	69-74	•	**1933309550**	394	177.8x16.6/4.4x196 177.8x16.6/13.5x196		19333 19334	4x19333 + 4x19334	4xYK/7/2 + 4xYK/6/2	**8158057002**	**810635J**	96	6.35x15.88x11.9-150°(L10/10-10)
M 24*(19t,25t)*	71-74	•	**1946109550**	394	209x16.6/4.4x196 209x16.6/13.5x196		19461 19462	4x19461 + 4x19462	4xYK/9/3 + 4xYK/8/3	**8158044002**	**810476J**	128	4.76x15.88x9.32-150°(8-10)

© JURID / All rights reserved 2005

© JURID / All rights reserved 2005





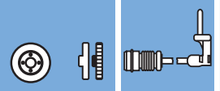

WVA BFMC



York Trailers...





Machinery Carrying Trailers

MC 16 A*(13t)*	70-	•	**1907203320** **1907209530**	394	152x12.7x362		19072	4x19072	4xGG/83/1	**8158056001**	**810635J**	48	6.35x14.29x11.9-150°(L9/10-9)
PSK 28*(24t)* **PSK 32***(27t)* **MCT 26***(21.5t)* **MCS 16***(13t)* **PSK 30***(26t)*	69-	•	**1933309550**	394	177.8x16.6/4.4x196 177.8x16.6/13.5x196		19333 19334	4x19333 + 4x19334	4xYK/7/2 + 4xYK/6/2	**8158057002**	**810635J**	96	6.35x15.88x11.9-150°(L10/10-10)
PSK 34, PSK 44*(29.25t)*		•	**1946109550**	394	209x16.6/4.4x196 209x16.6/13.5x196		19461 19462	4x19461 + 4x19462	4xYK/9/3 + 4xYK/8/3	**8158044002**	**810476J**	128	4.76x15.88x9.32-150°(8-10)

Semi Dropframe Platform Models

SF 16/A*(13t)*	69-	•	**1907203320** **1907209530**	394	152x12.7x362		19072	4x19072	4xGG/83/1	**8158056001**	**810635J**	48	6.35x14.29x11.9-150°(L9/10-9)
SF 32/3*(27.25t)*	72-	•	**1946109550**	394	209x16.6/4.4x196 209x16.6/13.5x196		19461 19462	4x19461 + 4x19462	4xYK/9/3 + 4xYK/8/3	**8158044002**	**810476J**	128	4.76x15.88x9.32-150°(8-10)
SFT 30*(26t)*	69-	•	**1933309550**	394	177.8x16.6/4.4x196 177.8x16.6/13.5x196		19333 19334	4x19333 + 4x19334	4xYK/7/2 + 4xYK/6/2	**8158057002**	**810635J**	96	6.35x15.88x11.9-150°(L10/10-10)

Skeletal Trailers

LDSK 24, LDSK 32, LDSK 34, LDSK 38, LSPSK 24, LSPSK 32, LSPSK 34, LSPSK 38, TSK 24, TSK 32, TSK 34, TSK 38	69-	•	**1946109550**	394	209x16.6/4.4x196 209x16.6/13.5x196		19461 19462	4x19461 + 4x19462	4xYK/9/3 + 4xYK/8/3	**8158044002**	**810476J**	128	4.76x15.88x9.32-150°(8-10)
LDSK 28, LDSK 30, LSPSK 28, LSPSK 30, TSK 28, TSK 30	69-	•	**1933309550**	394	177.8x16.6/4.4x196 177.8x16.6/13.5x196		19333 19334	4x19333 + 4x19334	4xYK/7/2 + 4xYK/6/2	**8158057002**	**810635J**	96	6.35x15.88x11.9-150°(L10/10-10)

Super Load Teamster Platforms

SL 14, SL 24, SL 32 W, SL 34, SL 42, SL 44	69-74	•	**1946109550**	394	209x16.6/4.4x196 209x16.6/13.5x196		19461 19462	4x19461 + 4x19462	4xYK/9/3 + 4xYK/8/3	**8158044002**	**810476J**	128	4.76x15.88x9.32-150°(8-10)
SL 16, SL 18, SL 20, SL 26, SL 30, SL 32, SL 32/3, SL 45, SL 50, SL 55	69-74	•	**1933309550**	394	177.8x16.6/4.4x196 177.8x16.6/13.5x196		19333 19334	4x19333 + 4x19334	4xYK/7/2 + 4xYK/6/2	**8158057002**	**810635J**	96	6.35x15.88x11.9-150°(L10/10-10)

Teamster Low Deck Trailers

LD 16, LD 18, LD 20, LD 26, LD 32, LD 32/3	75-	•	**1933309550**	394	177.8x16.6/4.4x196 177.8x16.6/13.5x196		19333 19334	4x19333 + 4x19334	4xYK/7/2 + 4xYK/6/2	**8158057002**	**810635J**	96	6.35x15.88x11.9-150°(L10/10-10)
LD 24, LD 34, LD 38	75-	•	**1946109550**	394	209x16.6/4.4x196 209x16.6/13.5x196		19461 19462	4x19461 + 4x19462	4xYK/9/3 + 4xYK/8/3	**8158044002**	**810476J**	128	4.76x15.88x9.32-150°(8-10)

Tipper Trailers

YD 18, YD 20, YD 28, YD 30, YD 32/3, YDF 18, YDF 20, YDF 28, YDF 30, YDF 32/3	69-74	•	**1933309550**	394	177.8x16.6/4.4x196 177.8x16.6/13.5x196		19333 19334	4x19333 + 4x19334	4xYK/7/2 + 4xYK/6/2	**8158057002**	**810635J**	96	6.35x15.88x11.9-150°(L10/10-10)
YD 24, YDF 24	69-74	•	**1946109550**	394	209x16.6/4.4x196 209x16.6/13.5x196		19461 19462	4x19461 + 4x19462	4xYK/9/3 + 4xYK/8/3	**8158044002**	**810476J**	128	4.76x15.88x9.32-150°(8-10)

Trailer Running Gear

PSK 34, PSK 44*(29.25t)*	69-	•	**1946109550**	394	209x16.6/4.4x196 209x16.6/13.5x196		19461 19462	4x19461 + 4x19462	4xYK/9/3 + 4xYK/8/3	**8158044002**	**810476J**	128	4.76x15.88x9.32-150°(8-10)
RG 10, RG 11, RG 12, RG 13, RG 14, RG 15, RG 3, RG 5 B	70-	•	**1946109550**	394	209x16.6/4.4x196 209x16.6/13.5x196		19461 19462	4x19461 + 4x19462	4xYK/9/3 + 4xYK/8/3	**8158044002**	**810476J**	128	4.76x15.88x9.32-150°(8-10)
RG 2, RG 5 A, RG 6, RG 8, RG 9	70-	•	**1933309550**	394	177.8x16.6/4.4x196 177.8x16.6/13.5x196		19333 19334	4x19333 + 4x19334	4xYK/7/2 + 4xYK/6/2	**8158057002**	**810635J**	96	6.35x15.88x11.9-150°(L10/10-10)

© JURID / All rights reserved 2005

© JURID / All rights reserved 2005

										WVA		BFMC	JURID	SUPASET	#

York Trailers...

Trombone Extending Trailers															
SL 24 CC*(19.75t)* **XTL 24, XTS 24** **SL 32 CC***(26t)*	69-	•	**1933309550**	394	177.8x16.6/4.4x196 177.8x16.6/13.5x196			19333 19334	4x19333 + 4x19334	4xYK/7/2 + 4xYK/6/2	**8158057002**	**810635J**	96	6.35x15.88x11.9-150°(L10/10-10)
XTL 20, XTS 20*(17t)* **XTL 18, XTS 18***(15t)*	69-	•	**1946109550**	394	209x16.6/4.4x196 209x16.6/13.5x196			19461 19462	4x19461 + 4x19462	4xYK/9/3 + 4xYK/8/3	**8158044002**	**810476J**	128	4.76x15.88x9.32-150°(8-10)

ZF

	•	•	**1950302320**	360				19503	4x19503					
	91-	•	**1900435380** **1900405450**	410	220x19.0/17.0x211 220x19.9/11.3x211 220x16.8x210.8			19004 19743 19755	2x19004 + 2x19743 + 19755	2xPB/32/2 + 2xPB/32/1 + 4xPB/31/1	**8103100002**	**811000J**	96	10x18x18-180°
		•	**2910815390**	430	248x30x109	**567801J**		29108	4x29108					
		•		432		**567110J**								

Zorzi

⊢⊣ : BPW		•	**1903209550**	**1903204040** **1903201250**	420	180x17.5/10.5x204		19032	8x19032	8xBC/98/1	**8162080001**	**810800J**	80	8x15x15.5-180°
		•	**1909409550**	**1909404040** **1909401250**	420	200x17.5/10.5x204		19094	8x19094	8xBC/97/1	**8162080001**	**810800J**	80	8x15x15.5-180°
		•	**1957409550**	**1957404040** **1957401250**	300	200x18.0/11.0x145		19574	8x19574	8xBC/80/1	**8162080001**	**810800J**	64	8x15x15.5-180°
⊢⊣ : ROR 15"		•	**1960409550**	**1960403290** **1960401230**	311	190x15.3/10.8x126 190x16.1/13.1x158		19604 19605	4x19604 + 4x19605	4xRW/9/2 + 4xRW/13/2	**8158057001**	**810635J**	80	6.35x15.88x11.9-150°(L10/10-10)
		•	**1903609550**	**1903604040** **1903601230**	419	178x19.0/16.0x189 178x18.2/11.5x194		19036 19037	4x19036 + 4x19037	4xRW/5/4 + 4xRW/6/4	**8103050014**	**810500J**	96	5x16x12-180°

JURID by Honeywell
© JURID / All rights reserved 2005
© JURID / All rights reserved 2005
JURID by Honeywell



JURID by Honeywell

© JURID / All rights reserved 2005



JURID / All rights reserved 2005



JURID / All rights reserved 2005

	WVA	#		A	B

2900109561

29001	4	2	6	20

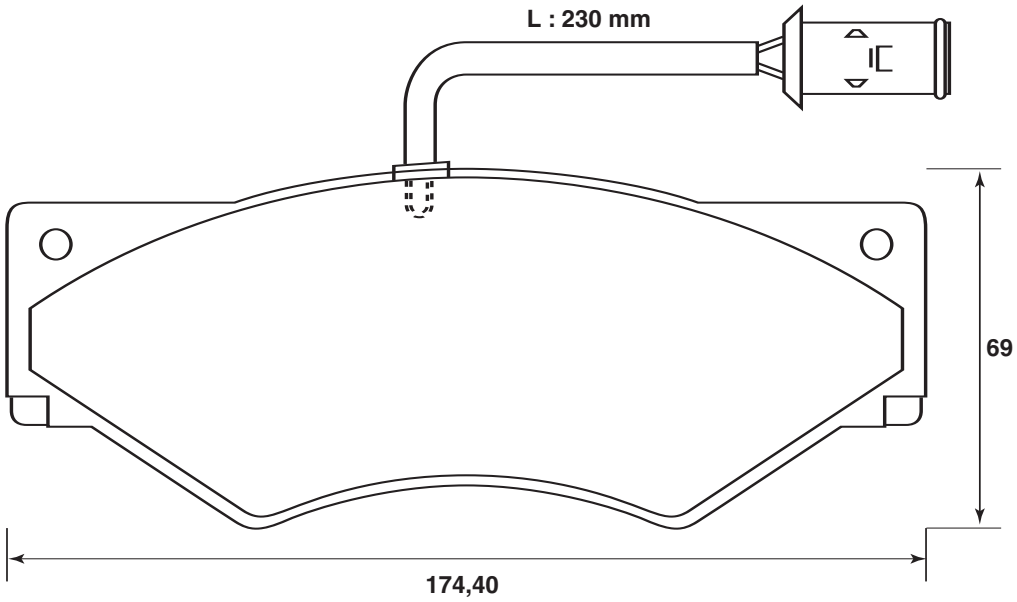

Iveco		Daily	p 86
Perrot (Wabco)			p 326
Wabco (Perrot)			p 440

2900805440

29008	4	6	18

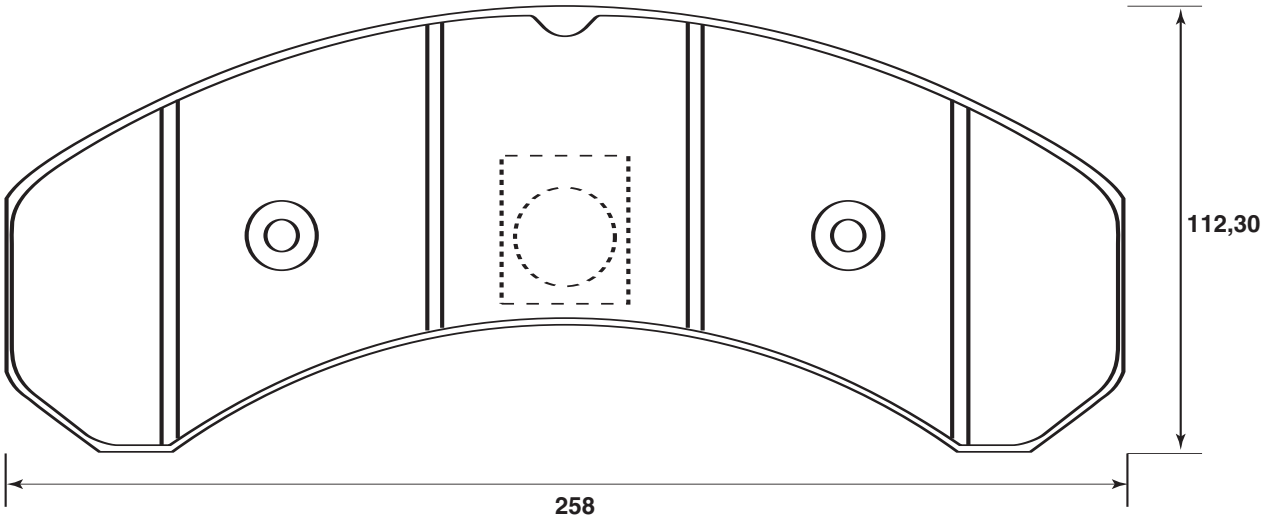

Kassbohrer / Setra		p 128, 130, 132, 134

JURID / All rights reserved 2005



WVA # 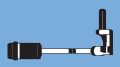

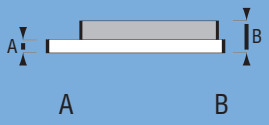

2901104240

29011	4	587000J, 587001J	7	25

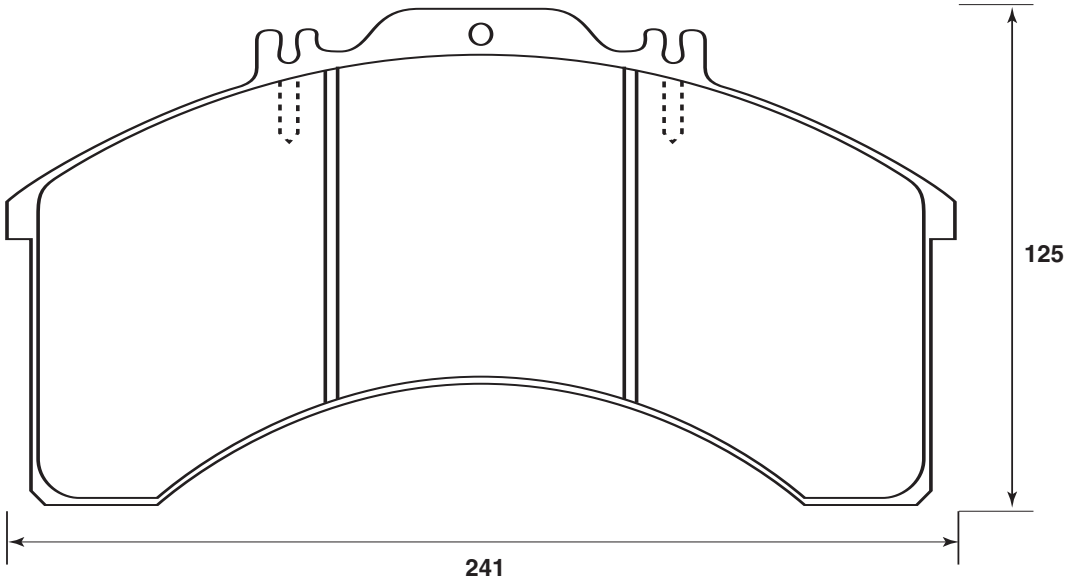

Iveco		Eurocargo	p 90
		Eurostar	p 90, 92, 94
		Eurotech	p 98, 100

2901109560

29011	4	587000J, 587001J	7	25

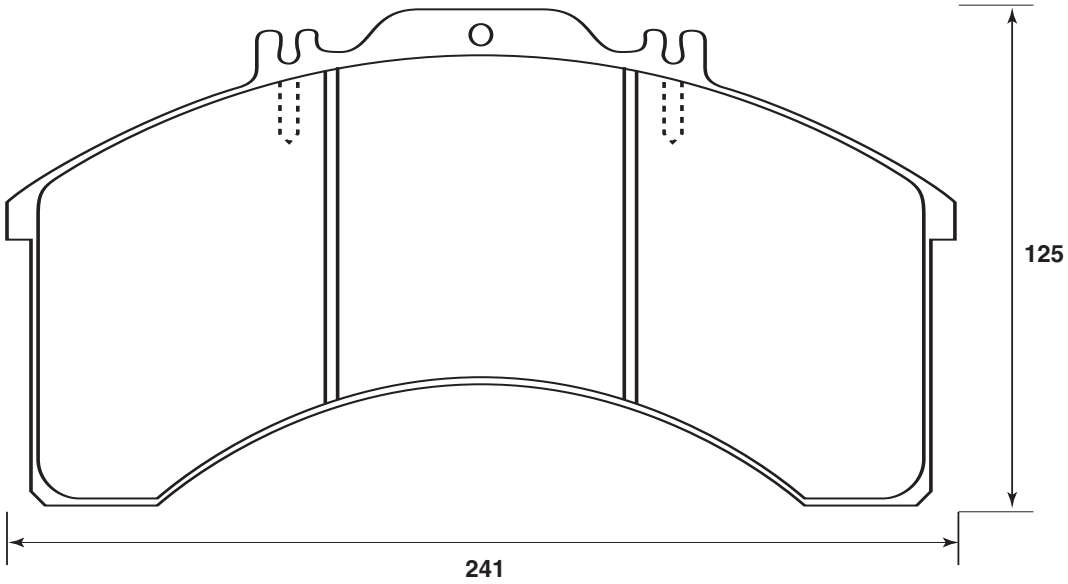

Iveco		Eurocargo	p 90
		Eurostar	p 90, 92, 94
		Eurotech	p 98, 100

JURID by Honeywell

© JURID / All rights reserved 2005

	WVA	#		A	B
2901303371	29013	4	4	5	20,5

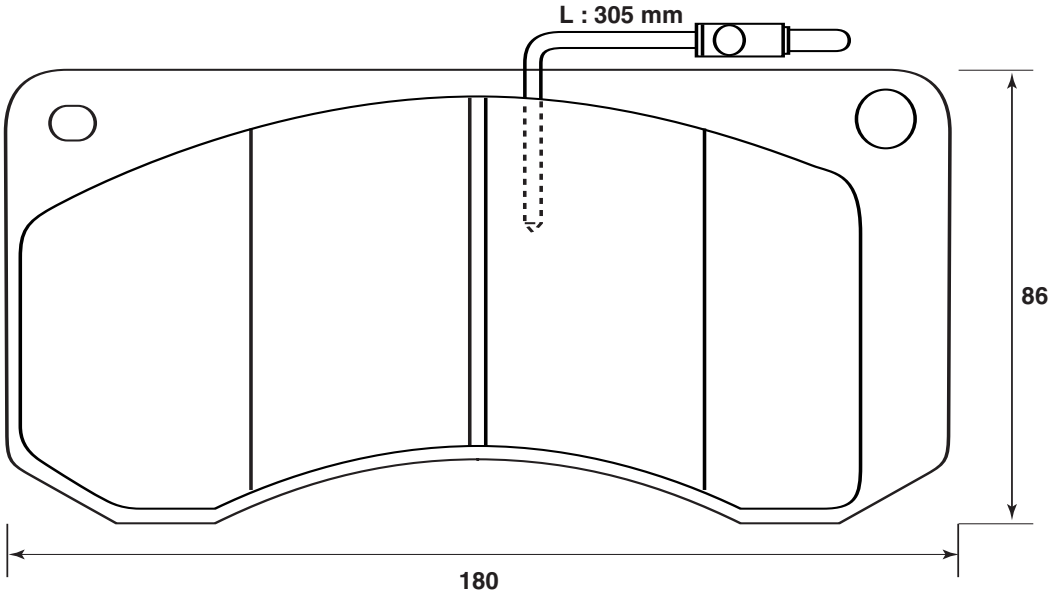

Dennis			p 54
Renault Trucks (Renault VI)		Maxter / G	p 354
		Midliner / M	p 354
		Midliner / S	p 356, 358

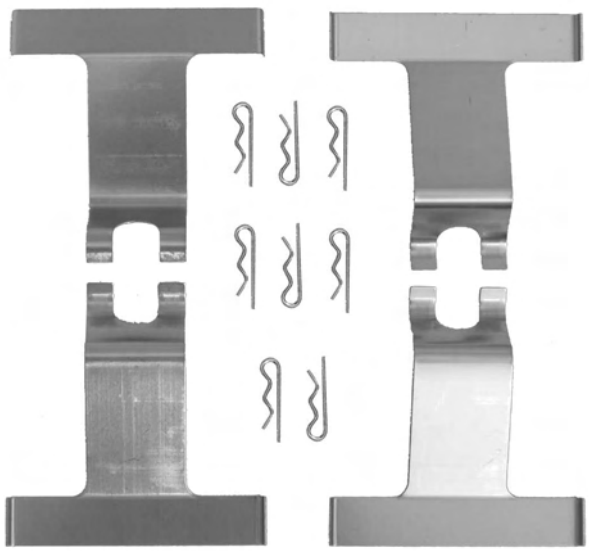

JURID / All rights reserved 2005

	WVA	#		A	B
2901303372	29013	4	2	5	20,5

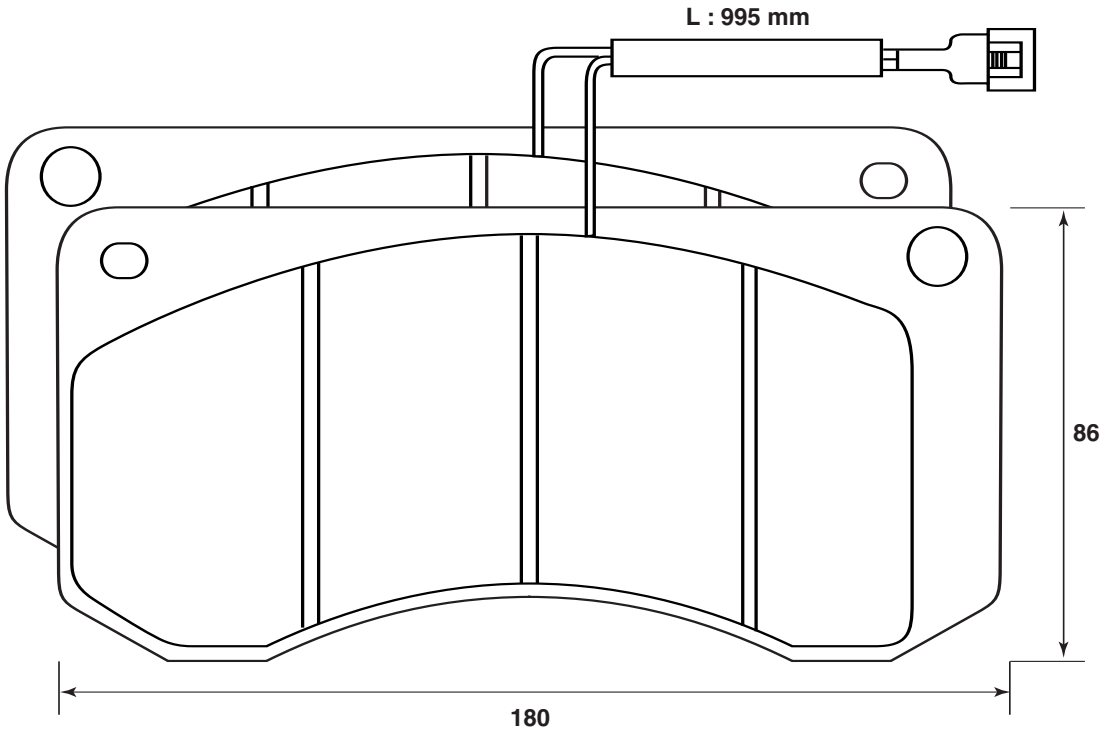

Renault Trucks (Renault VI)

Maxter / G	p 354
Midliner / M	p 356
Midliner / S	p 358

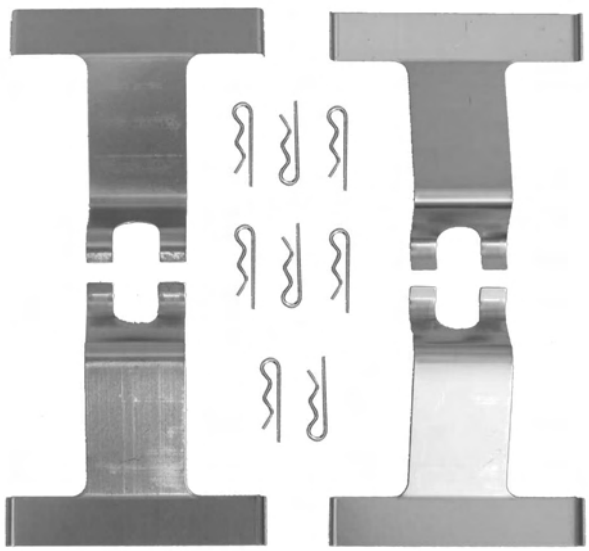

JURID / All rights reserved 2005

	WVA	#		A	B
2901309561	29013	4	2	5	20,5

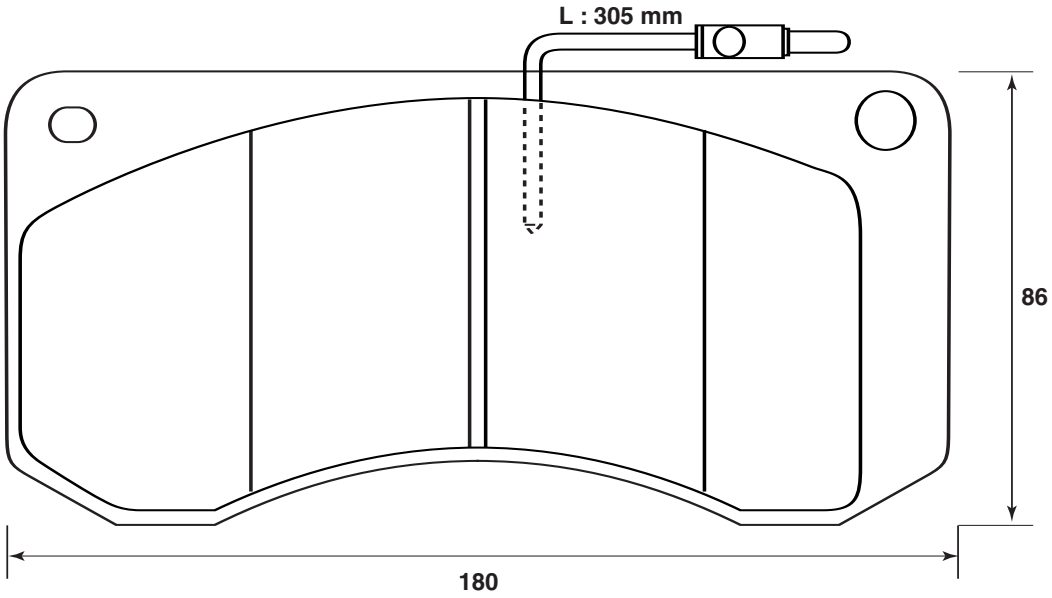

Dennis			p 54
Renault Trucks (Renault VI)		Maxter / G	p 354
		Midliner / M	p 354
		Midliner / S	p 356, 358

	WVA	#		A	B
2901505440	29015	4		6	20

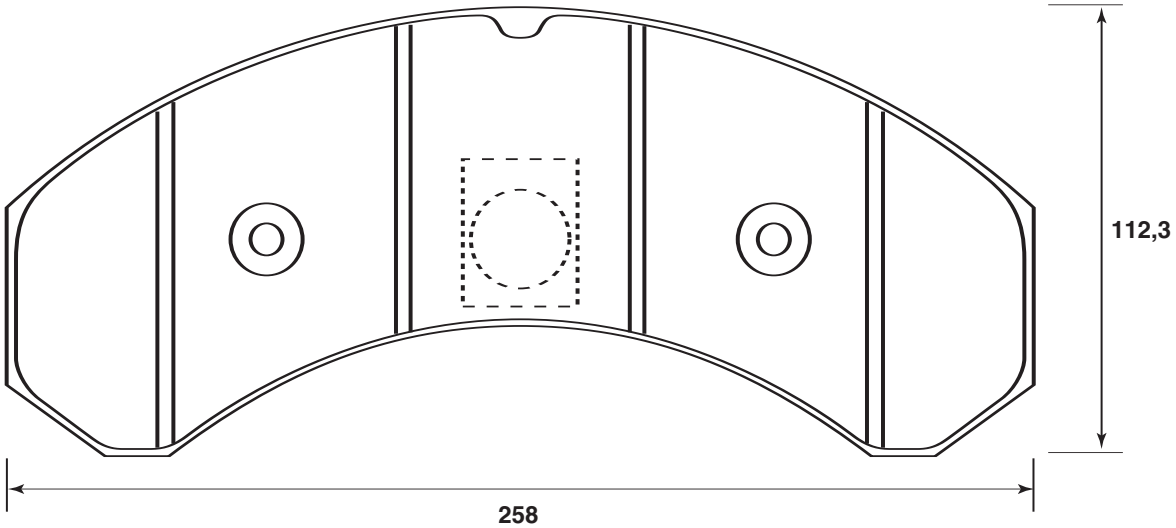

Kassbohrer / Setra		p 128, 130, 132, 134

JURID / All rights reserved 2005

2901605440

29016 4 8 28

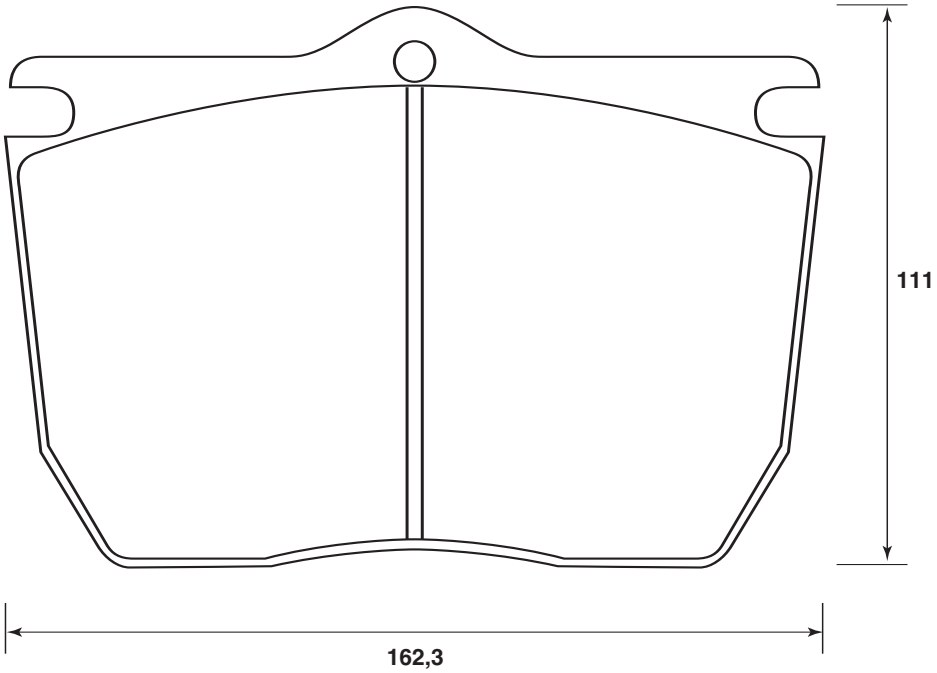

Iveco		p 110
Menarini		p 196
Sicca		p 396
Perrot (Wabco)		p 326
Wabco (Perrot)		p 440

2901605441

29016 8 2 8 28

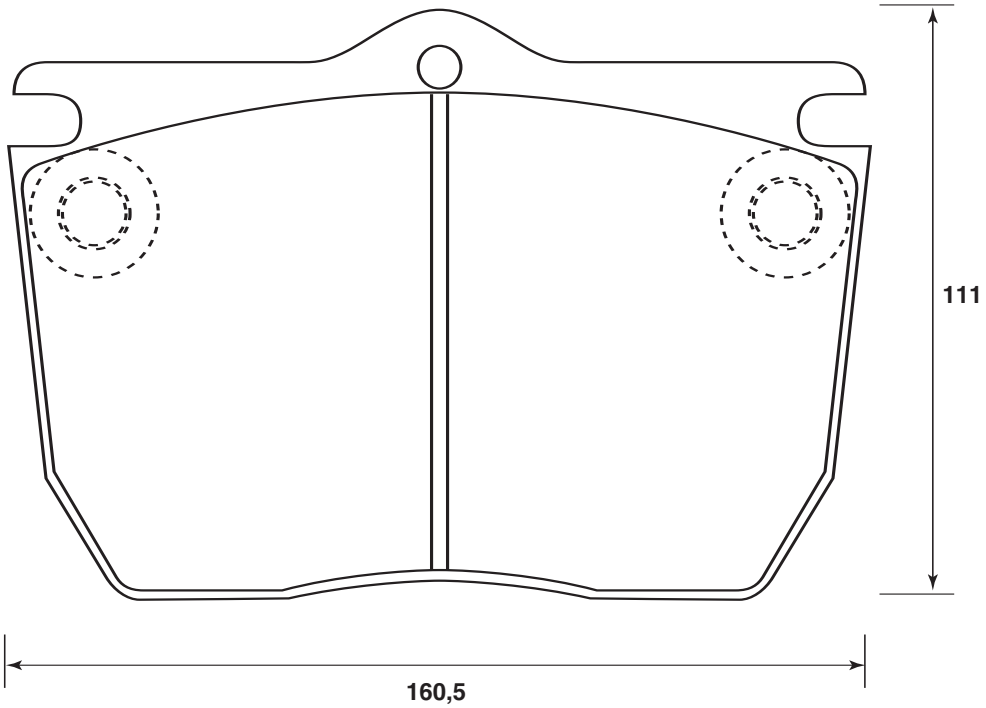

Iveco		p 110
Menarini		p 196
Perrot (Wabco)		p 326
Wabco (Perrot)		p 440

JURID by Honeywell

JURID / All rights reserved 2005



WVA # 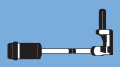

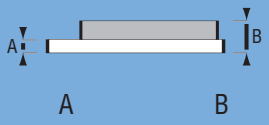

2901609561

29016 | 8 | 2 | 8 | 28

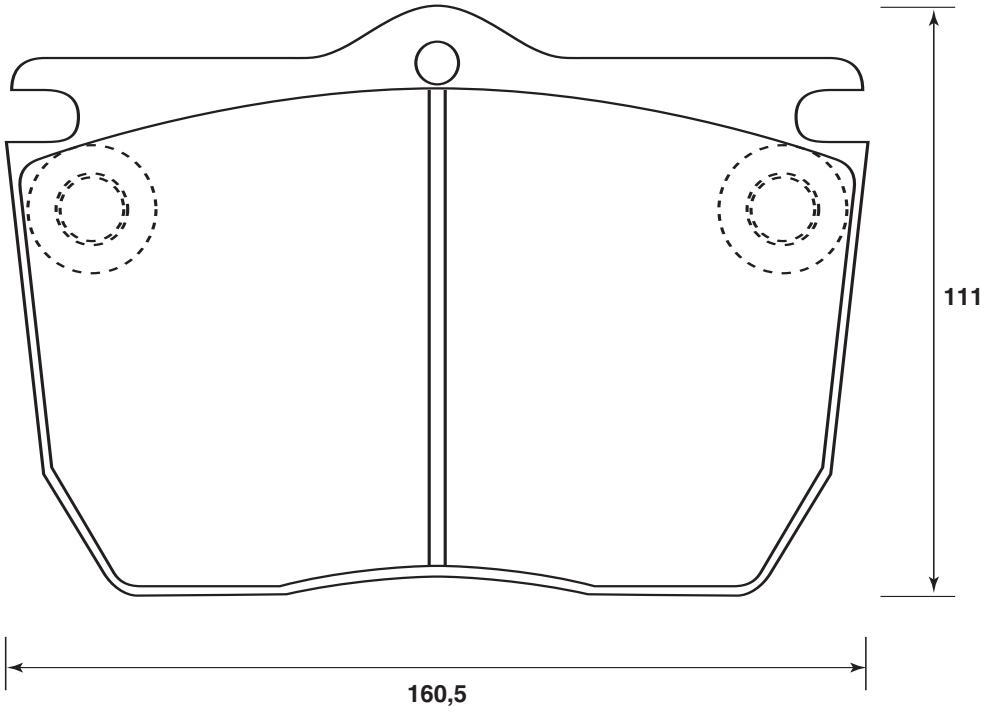

Iveco		p 110
Menarini		p 196
Perrot (Wabco)		p 326
Wabco (Perrot)		p 440

2901709560

29017 | 4 | 6 | 23

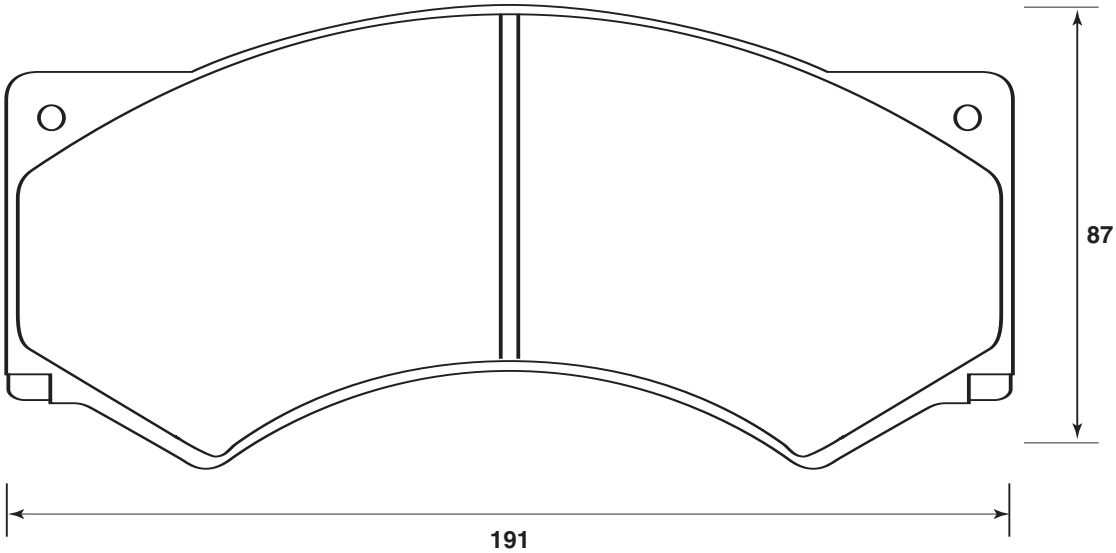

Avia		A60, A75	p 8
Daf		1000	p 30
		45, 600	p 42
		800	p 44
Iveco		Eurocargo	p 90
		Z	p 106
Leyland / DAF		FA45	p 144
		T 45	p 146
			p 148
Perrot (Wabco)			p 326
Wabco (Perrot)			p 440

JURID / All rights reserved 2005

JURID by Honeywell



WVA # 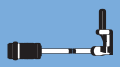

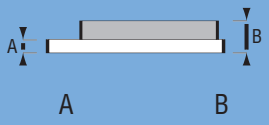

2902409561

29024	4	2	6	23

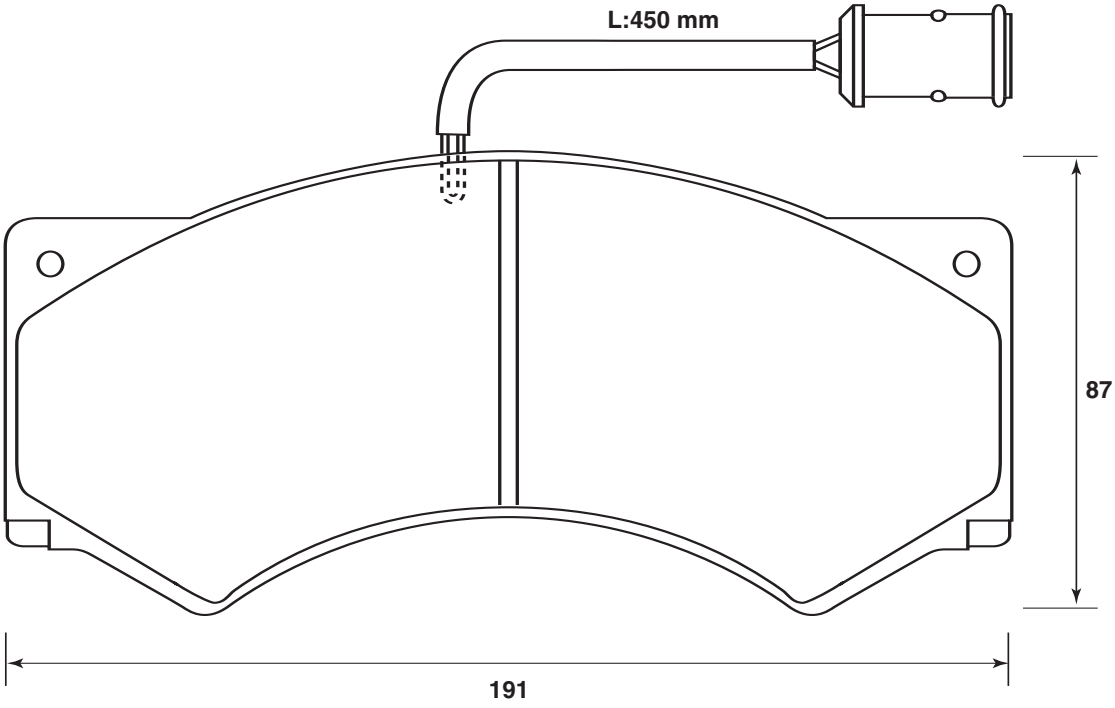

Daf		45	p 42
Iveco		Z	p 108
Perrot (Wabco)			p 326
Wabco (Perrot)			p 440

JURID / All rights reserved 2005

	WVA	#		A	B
2903004230	29030	4	587003J, 587007J, 587023J	8	28

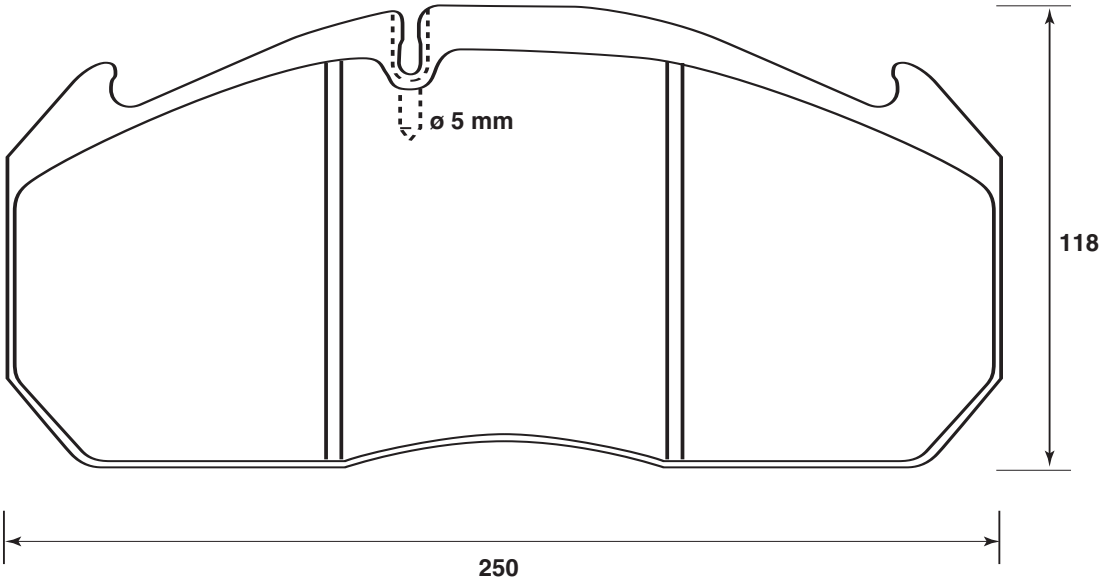

ERF		E	p 62
MAN		F 2000	p 162
		F 90	p 170, 172, 174
		M 2000	p 180
		TG-A	p 188
			p 190, 192

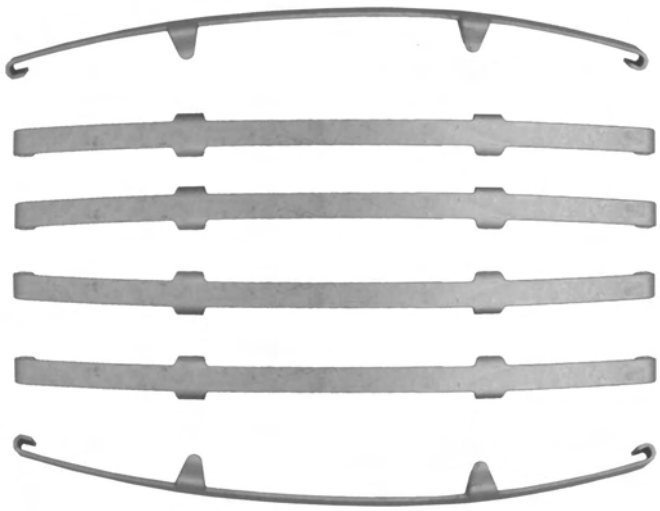

JURID / All rights reserved 2005

	WVA	#		A	B
2903005390	29030	4	587003J, 587007J, 587023J	8	28

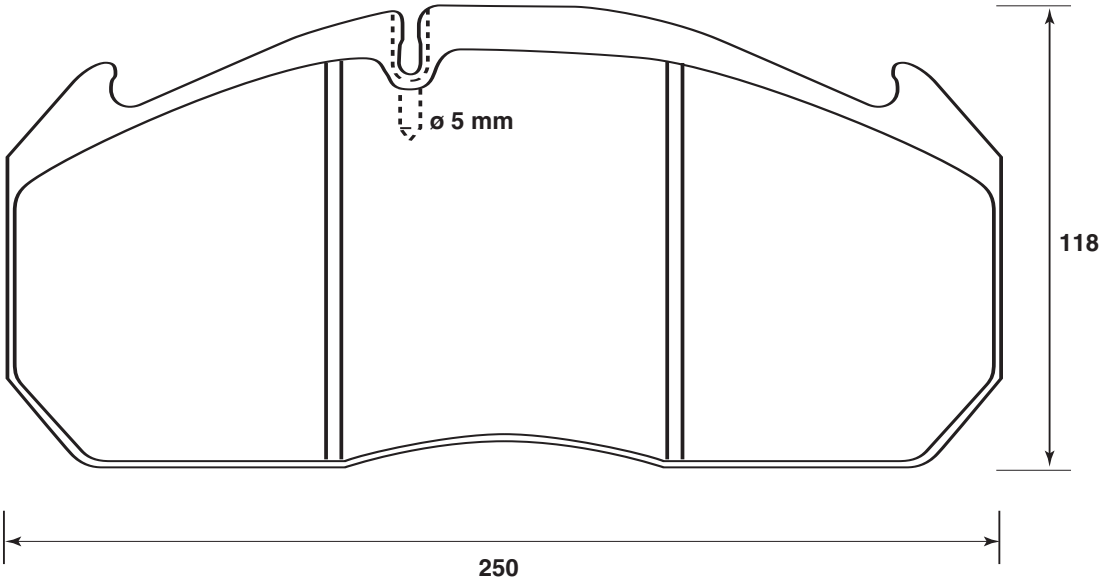

Dennis			p 54
Karosa			p 126
Kassbohrer / Setra			p 134
Mercedes Benz / Evobus		O350	p 282
		O403	p 282
		O404	p 282
Meritor / ROR			p 290
Van Hool			p 410

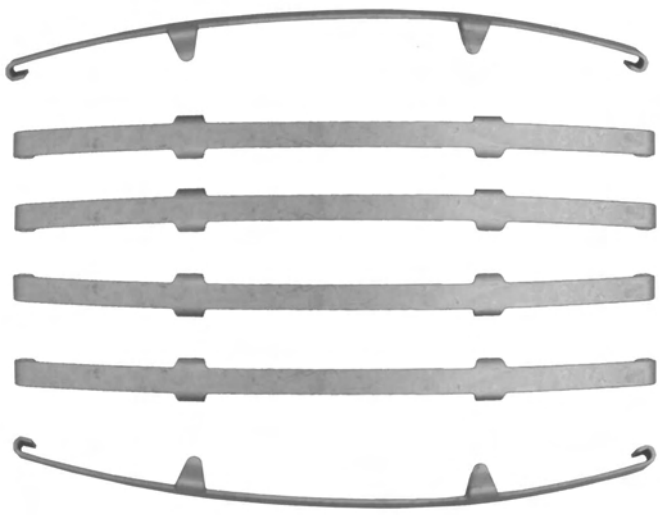

JURID by Honeywell

© JURID / All rights reserved 2005

	WVA	#		A	B
2903005391	29030	4	2	8	28

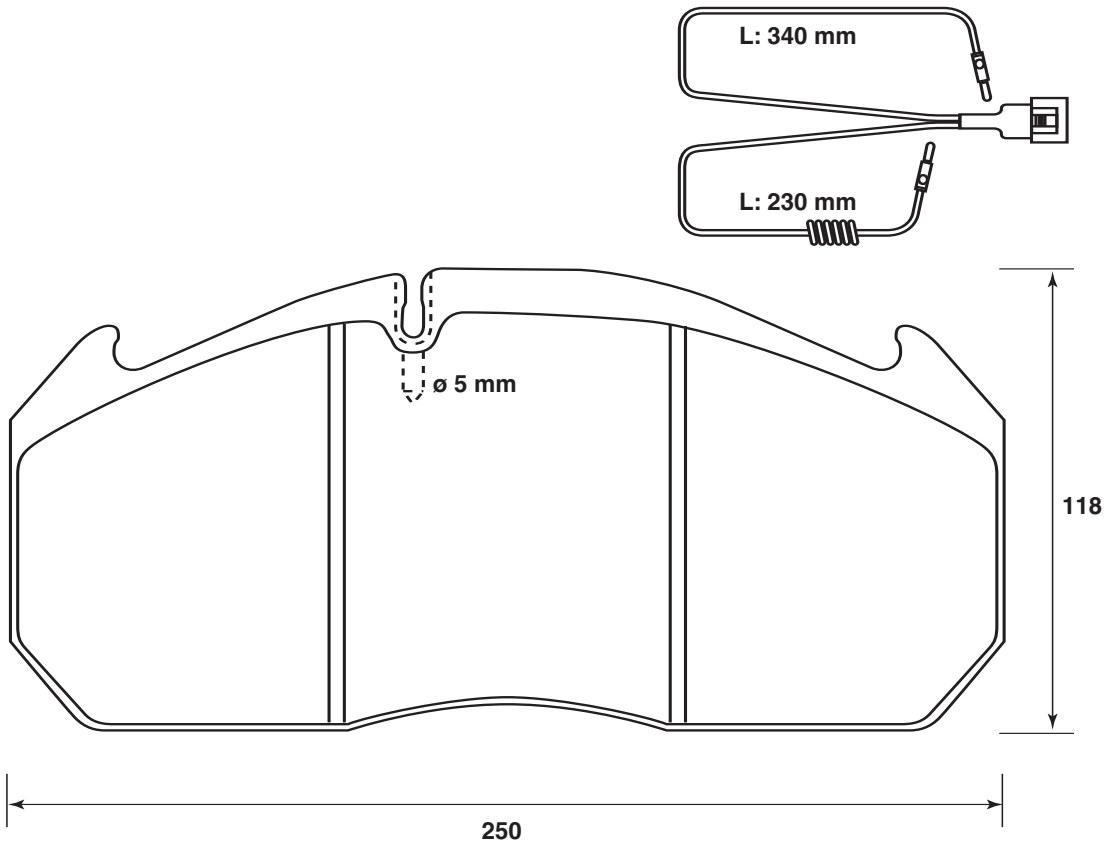

Renault Trucks (Renault VI)		Magnum / AE	p 342, 344
		Major / R	p 348

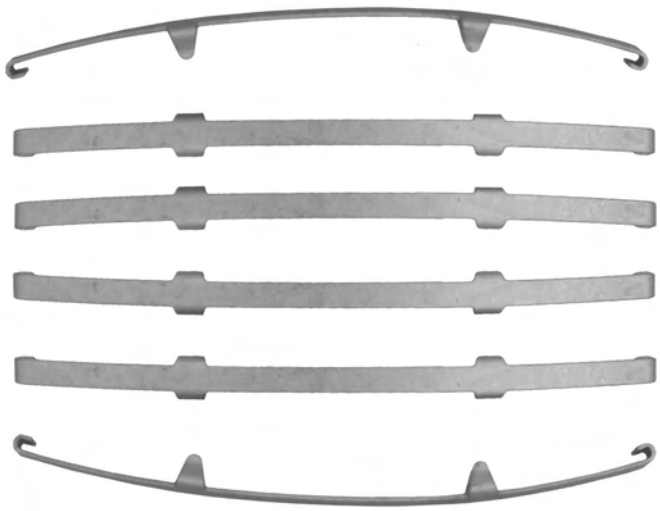

JURID / All rights reserved 2005

	WVA	#		A	B
2903005392	29030	4	2	8	28

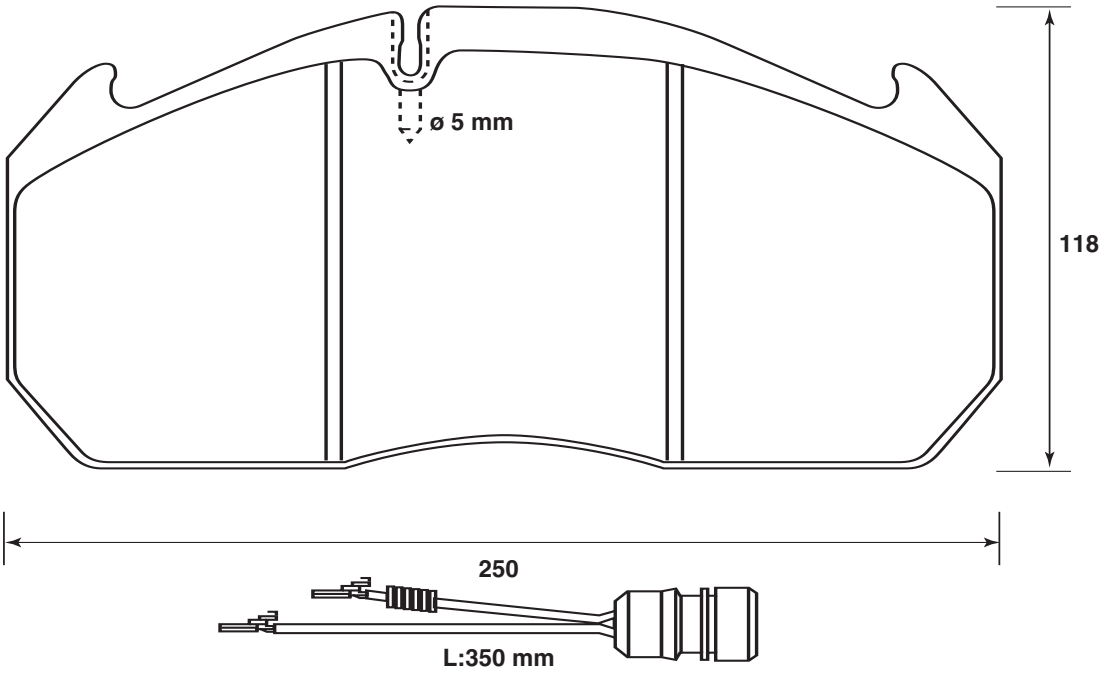

Heuliez			p 80
Renault Trucks (Renault VI)		Magnum / AE	p 344
		Manager / G	p 352
		Premium	p 362
			p 363

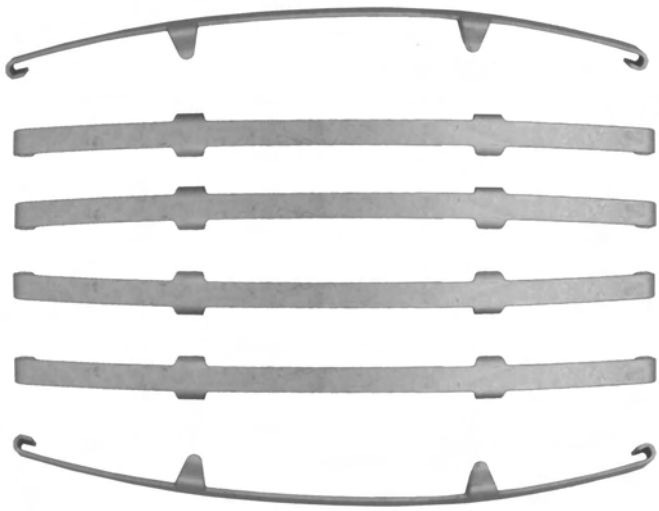

JURID by Honeywell

© JURID / All rights reserved 2005

	WVA	#		A	B
2903009560	29030	4	587003J, 587007J, 587013J, 587023J	8	28

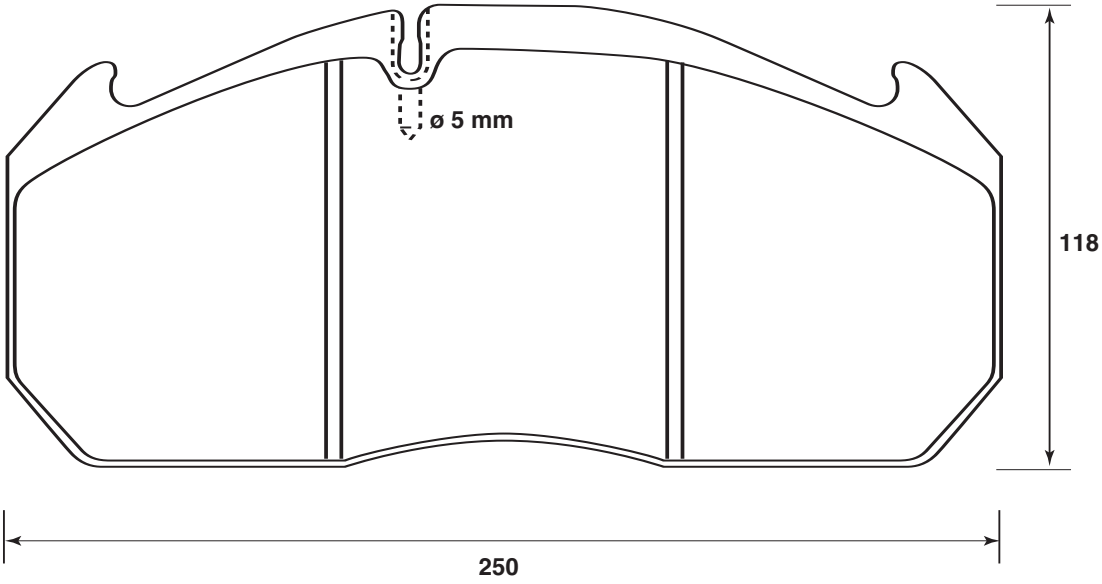

Dennis			p 54
ERF		E	p 62
Heuliez			p 80
Karosa			p 126
Kassbohrer / Setra			p 134
MAN		F 2000	p 162
		F 90	p 170, 172, 174
		M 2000	p 180
		TG-A	p 188
			p 190, 192
Mercedes Benz / Evobus		O350	p 282
		O403	p 282
		O404	p 282
Meritor / ROR			p 290
Renault Trucks (Renault VI)		Magnum / AE	p 342, 344
		Major / R	p 348
		Manager / G	p 352
		Premium	p 362
			p 363
Van Hool			p 410

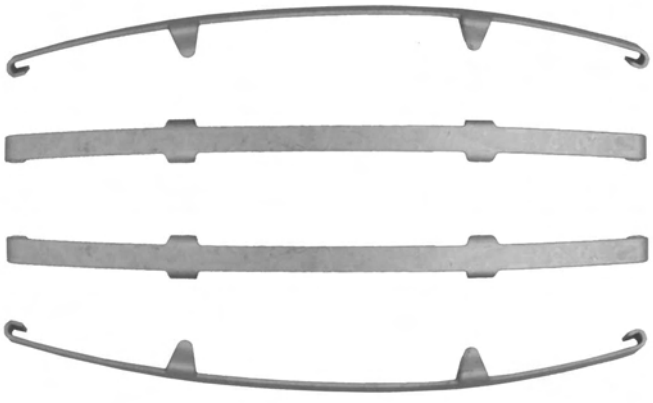

JURID / All rights reserved 2005



WVA # 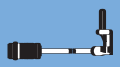

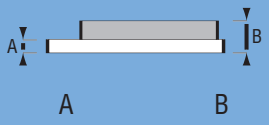

2903204240

29032 4 587000J, 587001J 7 25

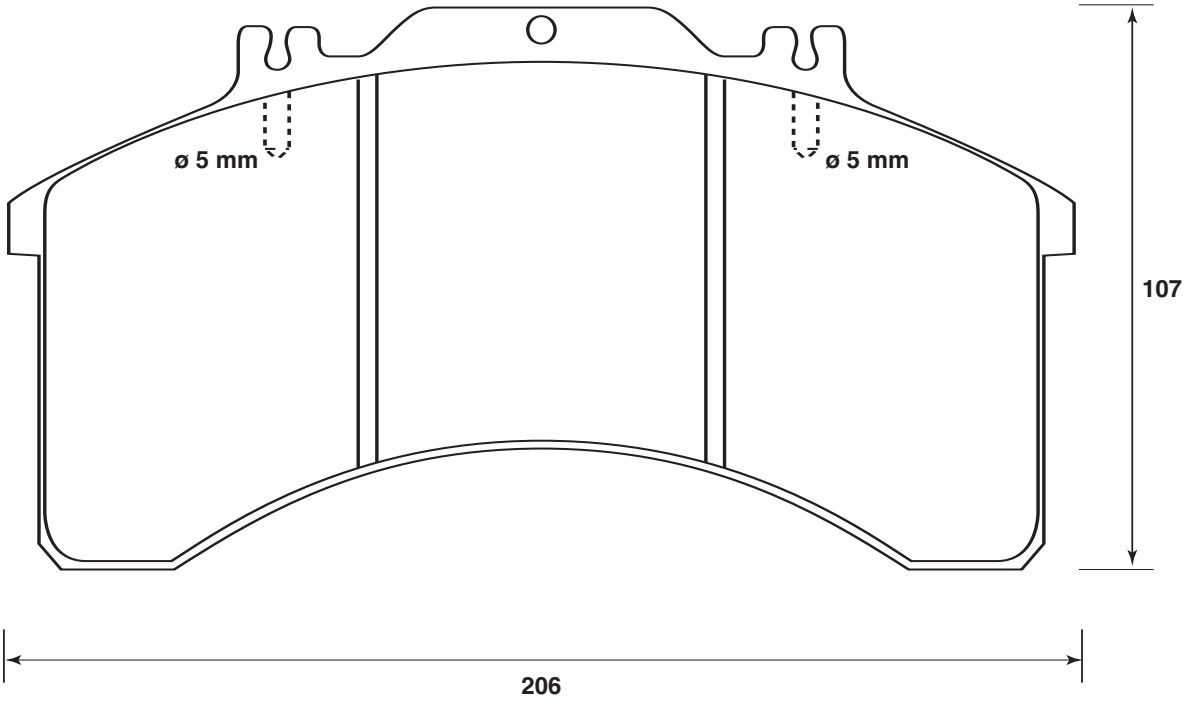

Iveco  Eurocargo

p 90
p 112

2903209560

29032 4 587000J, 587001J 7 25

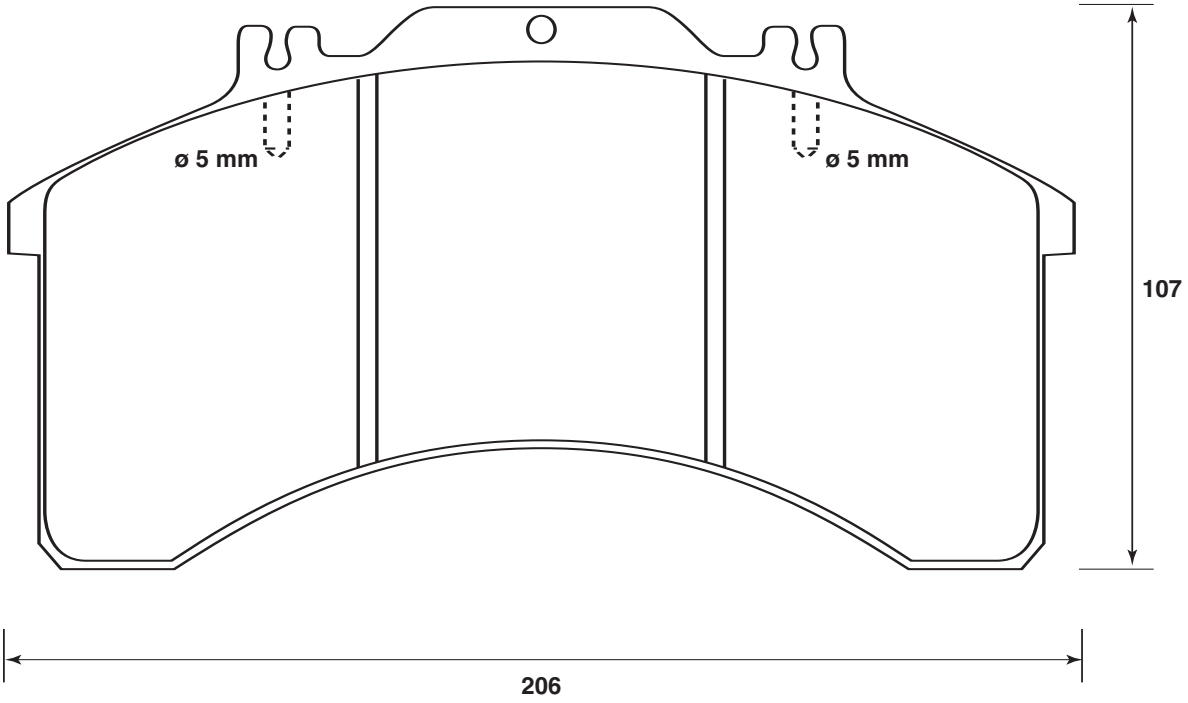

Iveco  Eurocargo

p 90
p 112

JURID by Honeywell

© JURID / All rights reserved 2005

	WVA	#		A	B
2904303381	29043	4	4	8	24

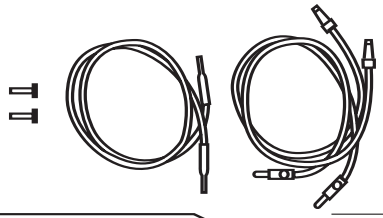

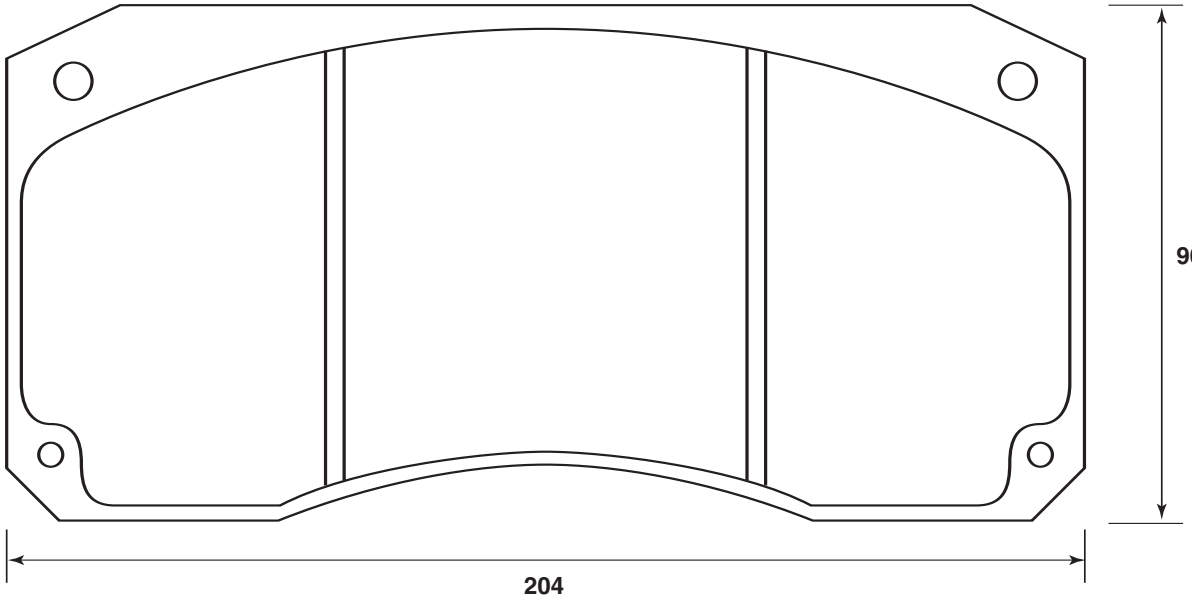

Dennis			p 54
Renault Trucks (Renault VI)		Magnum / AE	p 344
		Major / R	p 346, 348, 350
		Manager / G	p 352

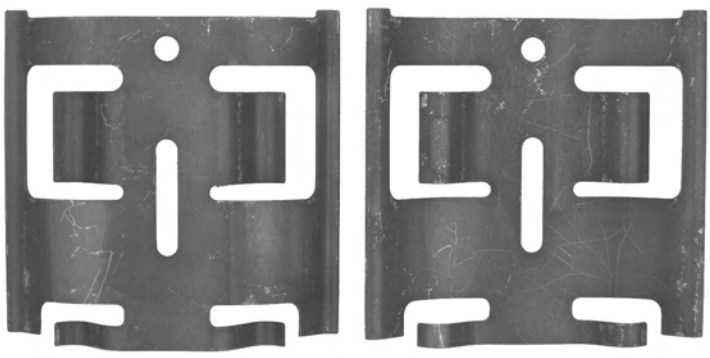

JURID / All rights reserved 2005

	WVA	#		A	B
2904303382	29043	4	2	8	24

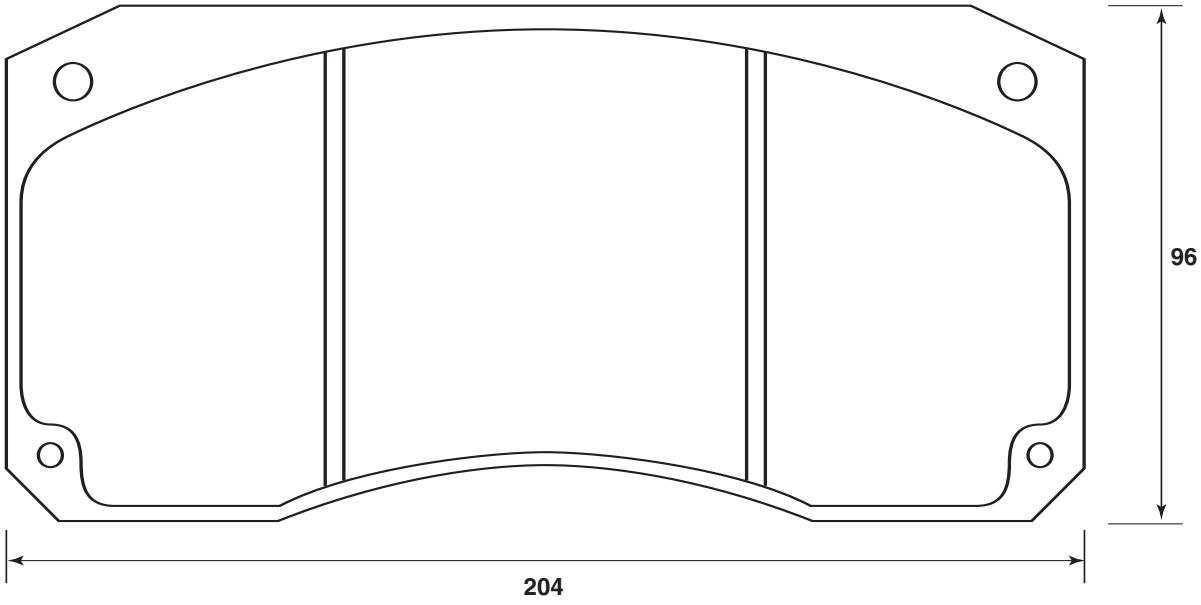

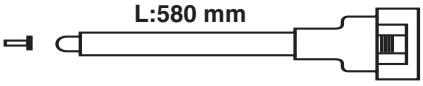

Renault Trucks (Renault VI)		Magnum / AE	p 342
		Major / R	p 346, 348, 350

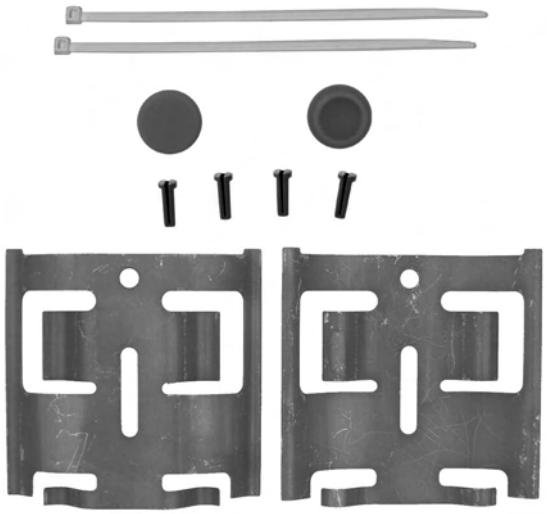

JURID / All rights reserved 2005

	WVA	#		A	B
2904309560	29043	4	587012J	8	24

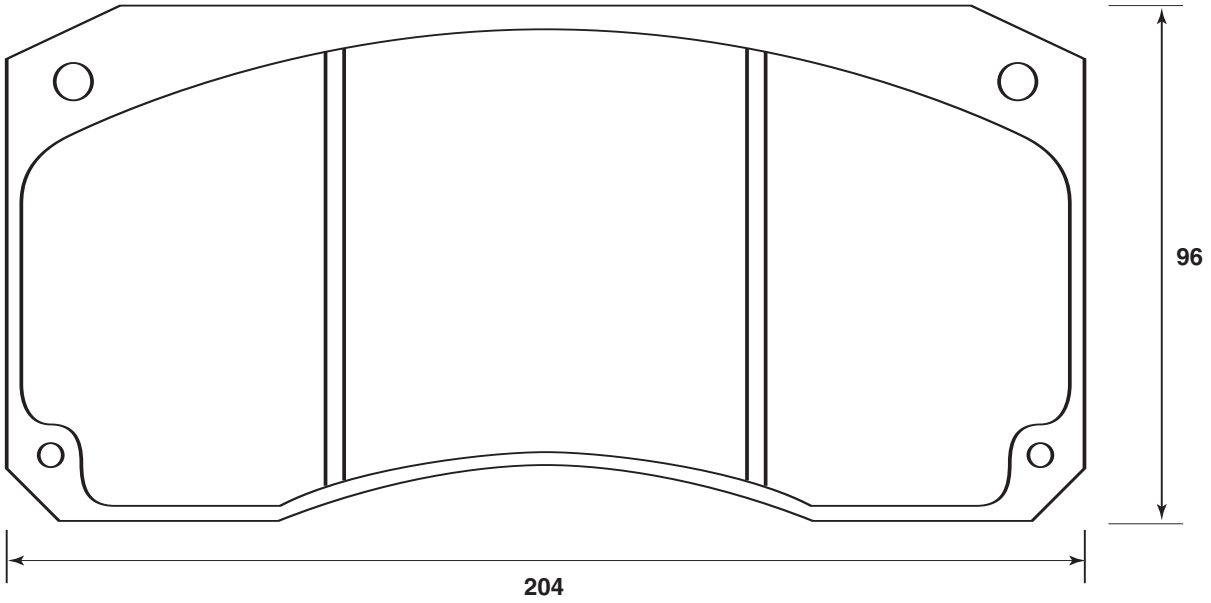

Renault Trucks (Renault VI)		Magnum / AE	p 342, 344
		Major / R	p 346, 348, 350
		Manager / G	p 352

	WVA	#		A	B
2904403331	29044	4	4	5	20

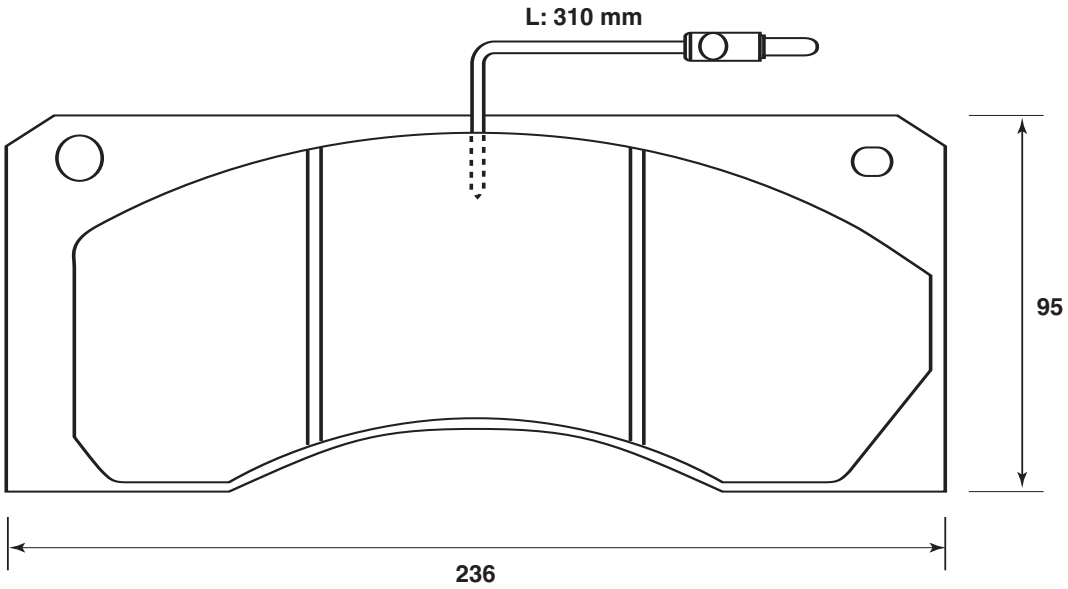

Renault Trucks (Renault VI)		p 363

JURID / All rights reserved 2005

	WVA	#		A	B
2904409561	29044	4	4	5	20

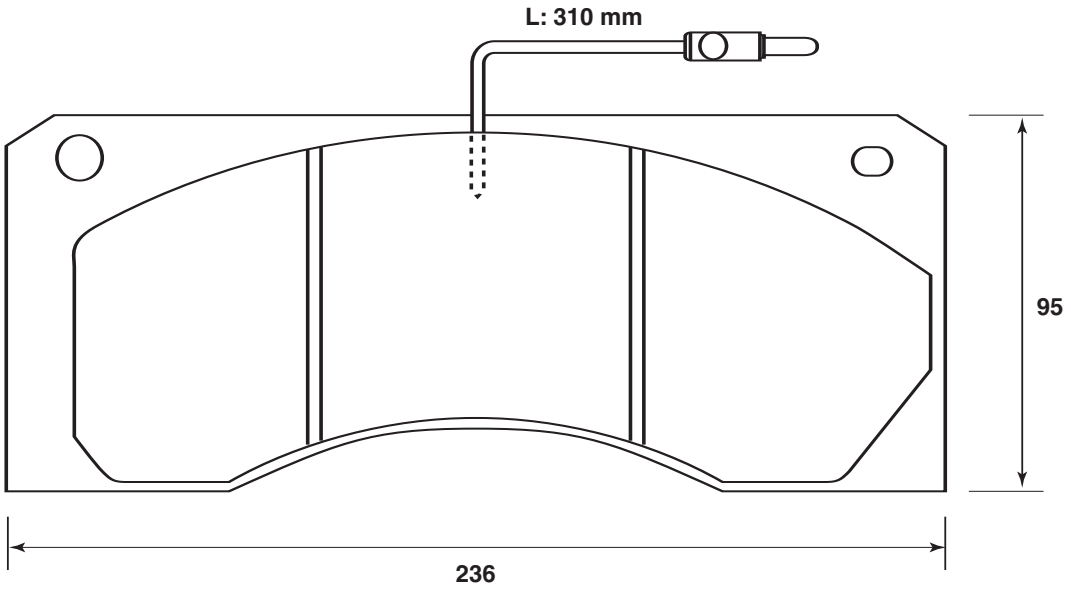

Renault Trucks (Renault VI) p 363

	WVA	#		A	B
2904905590	29049	2	2	8	14

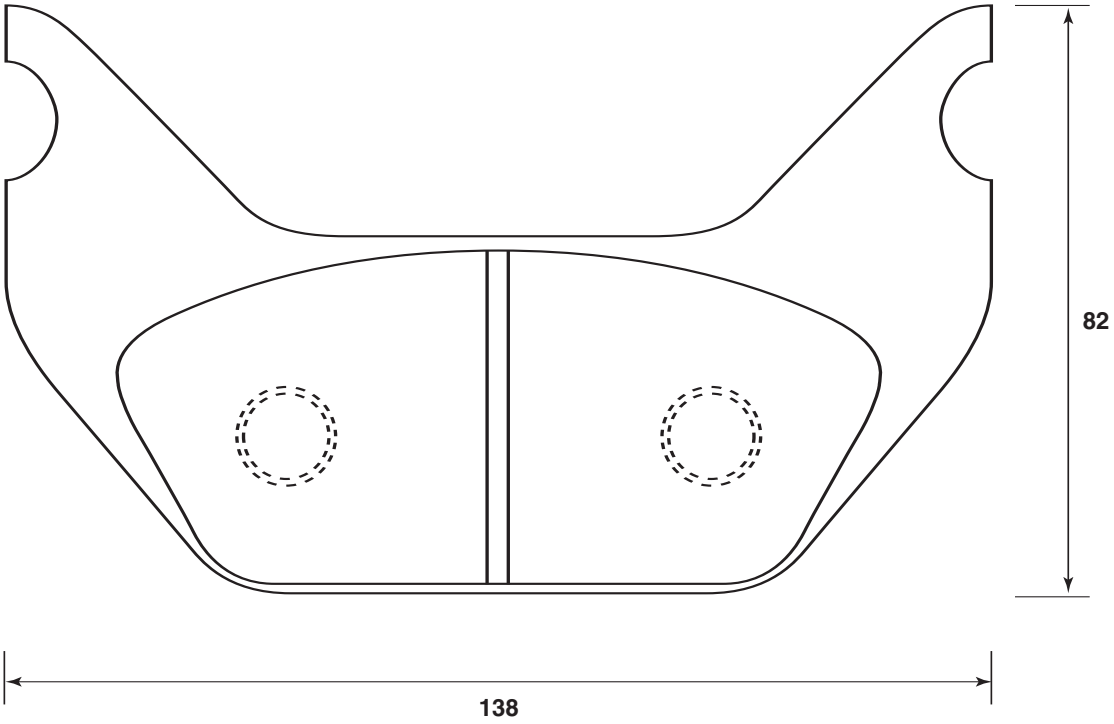

Perrot (Wabco) p 326
Wabco (Perrot) p 440

JURID / All rights reserved 2005

	WVA	#		A	B
2905304230	29053	4	587003J, 587007J, 587023J	10	30

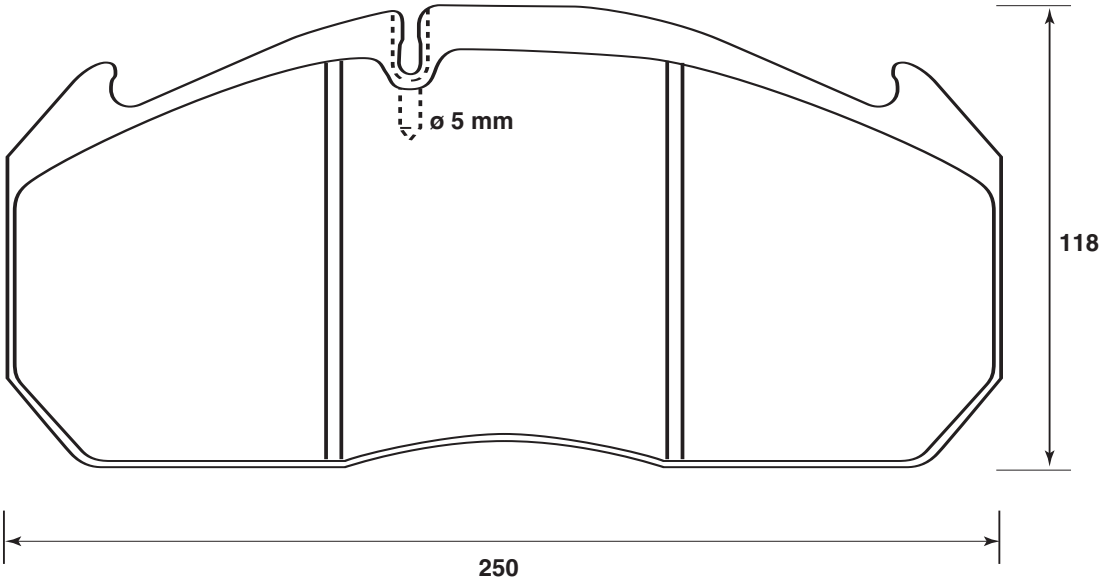

MAN		F 2000	p 162
		F 90	p 170, 172, 174
		M 2000	p 180
		TG-A	p 188
			p 190, 192

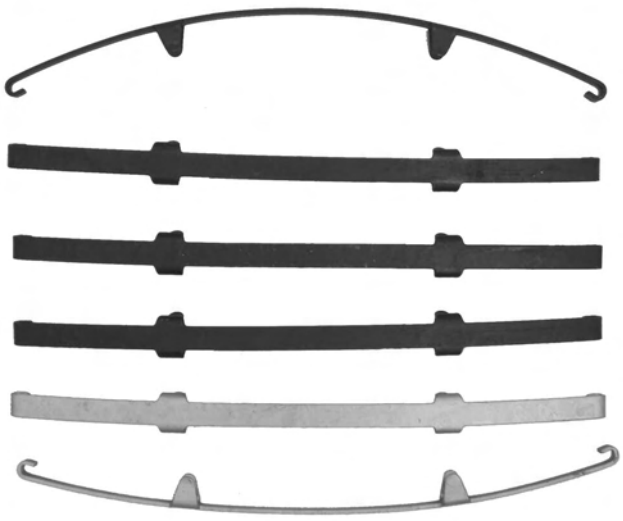

JURID / All rights reserved 2005



WVA #

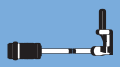

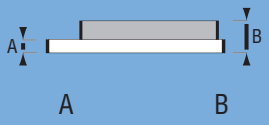

2905305390

29053	4	587003J, 587007J, 587023J	10	30

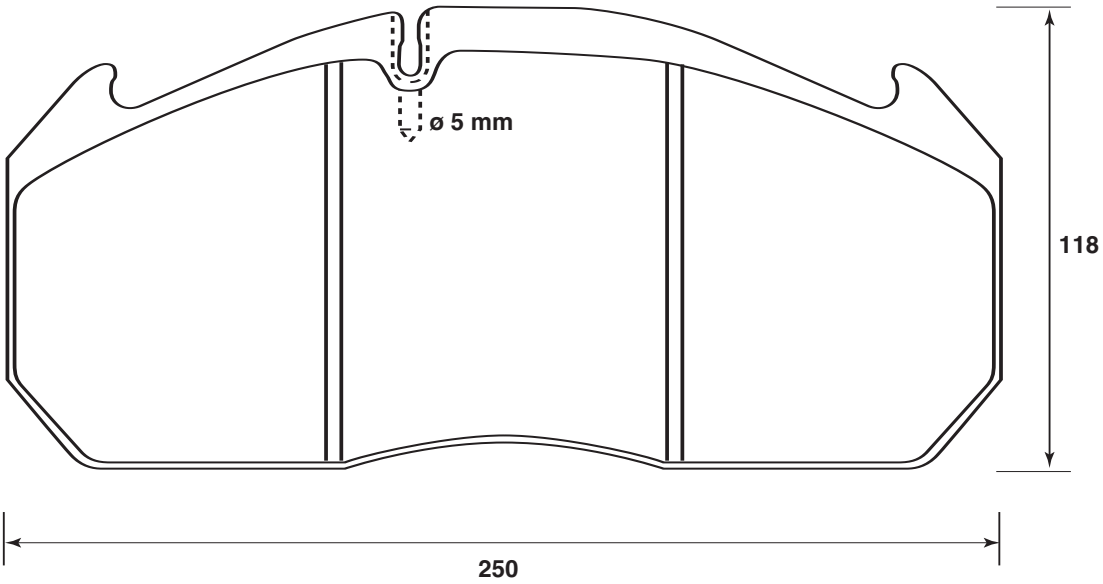

Kassbohrer / Setra			p 134
Mercedes Benz / Evobus		O350	p 282
		O403	p 282
		O404	p 282

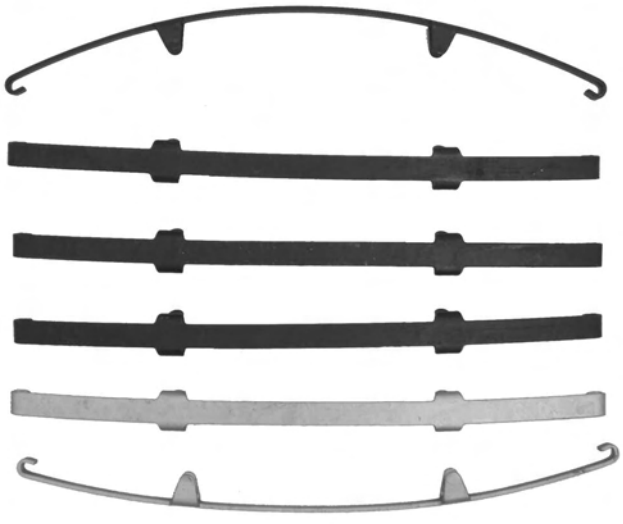

JURID by Honeywell

© JURID / All rights reserved 2005

	WVA	#		A	B
2905405590	29054	2	2	6	11

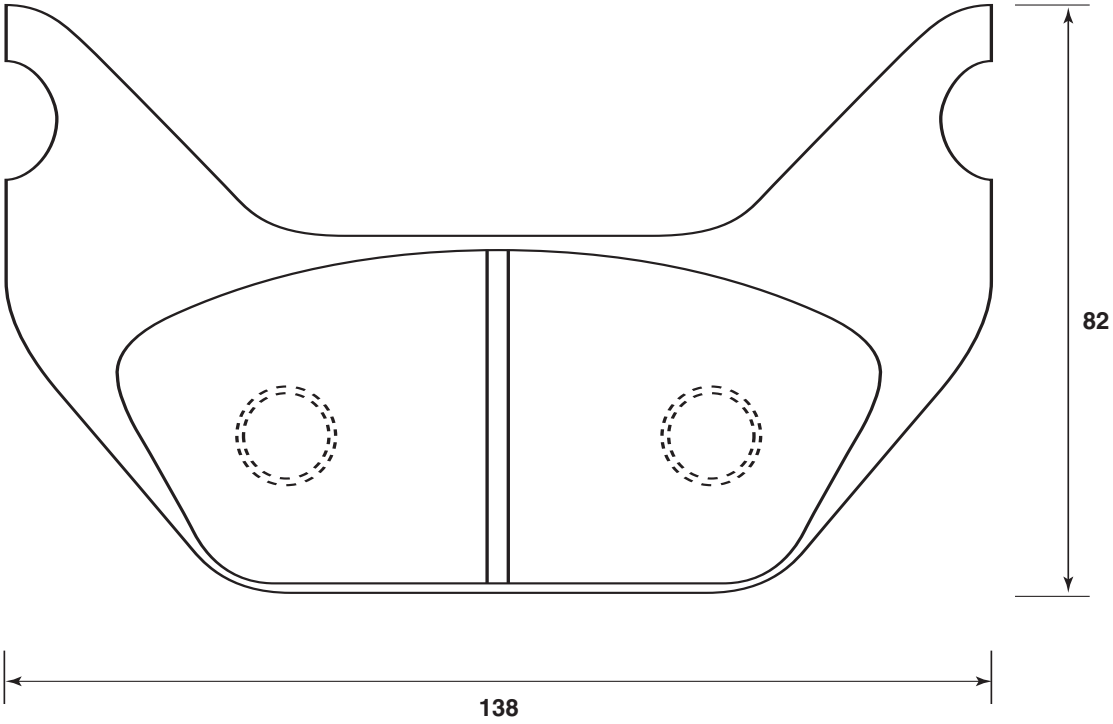

Perrot (Wabco)		p 326
Wabco (Perrot)		p 440

	WVA	#		A	B
2905503010	29055	4		6	22

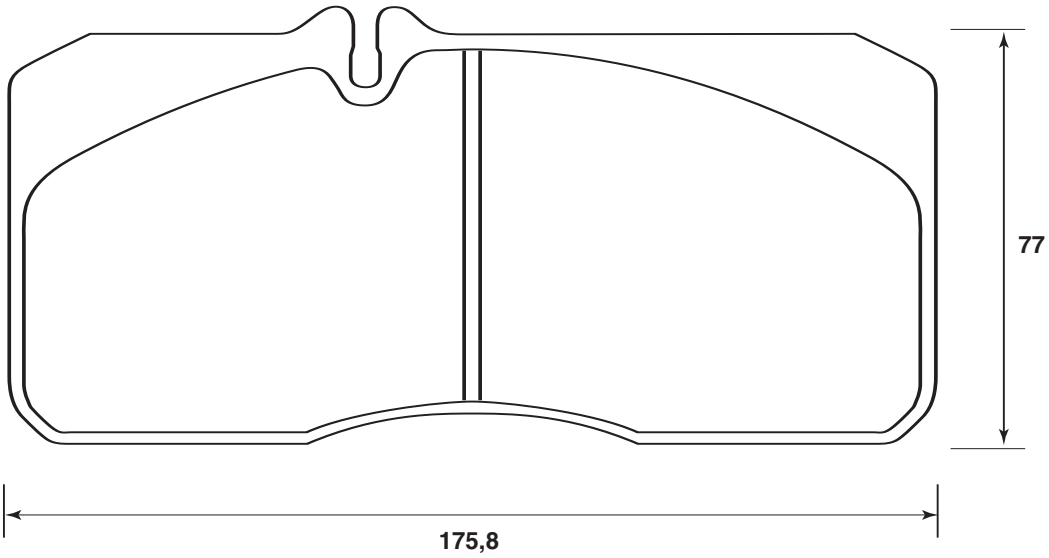

MAN		L 2000	p 178, 180 p 192, 194
Perrot (Wabco)			p 324
Wabco (Perrot)			p 440

JURID / All rights reserved 2005

	WVA	#		A	B

2905509560

29055	4		6	22

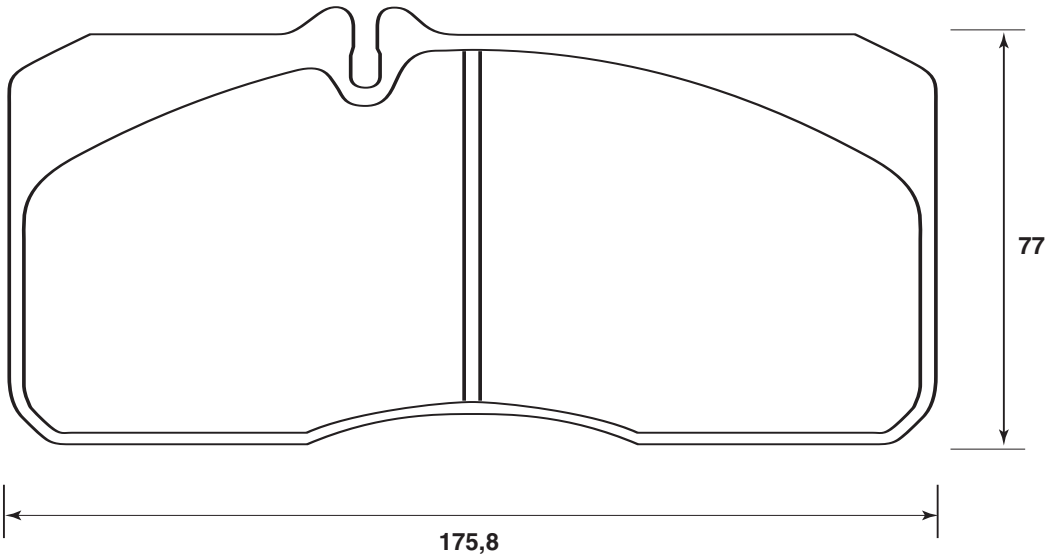

MAN		L 2000	p 178, 180 p 192, 194
Perrot (Wabco)			p 324
Wabco (Perrot)			p 440

2905603010

29056	4		7	23

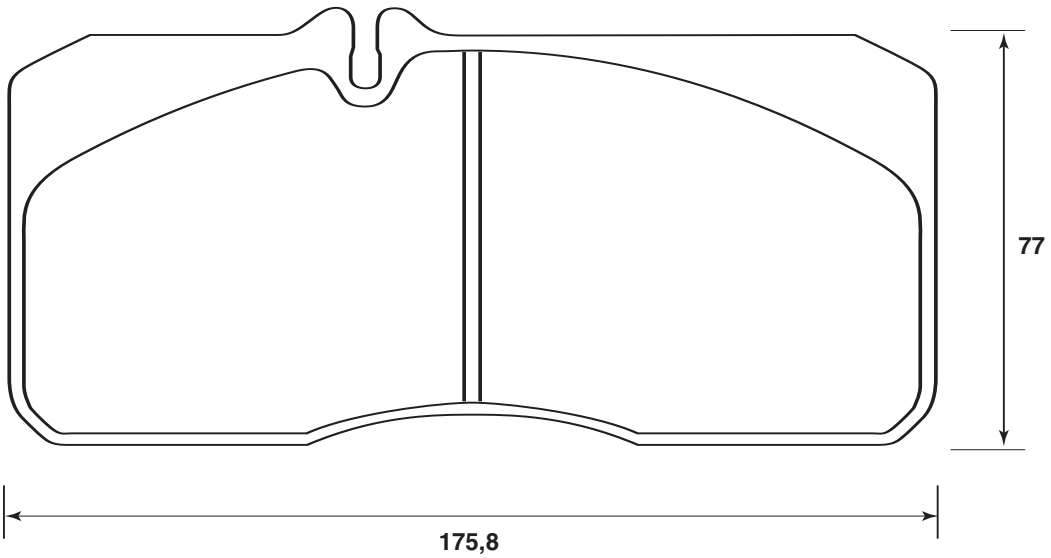

MAN		L 2000	p 178 p 192, 194

JURID by Honeywell

© JURID / All rights reserved 2005

	WVA	#		A	B
2906503341	29065	4	2	6	22

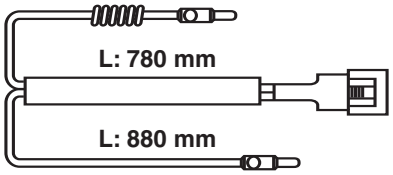

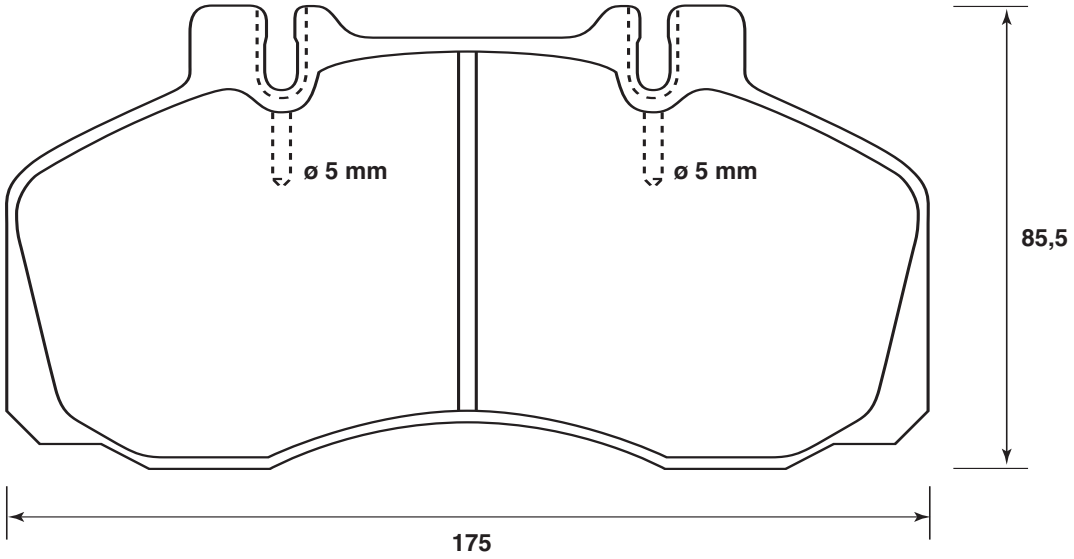

Renault Trucks (Renault VI)		Midliner / S	p 356, 358

2906509560	29065	4	587002J, 587016J	6	22

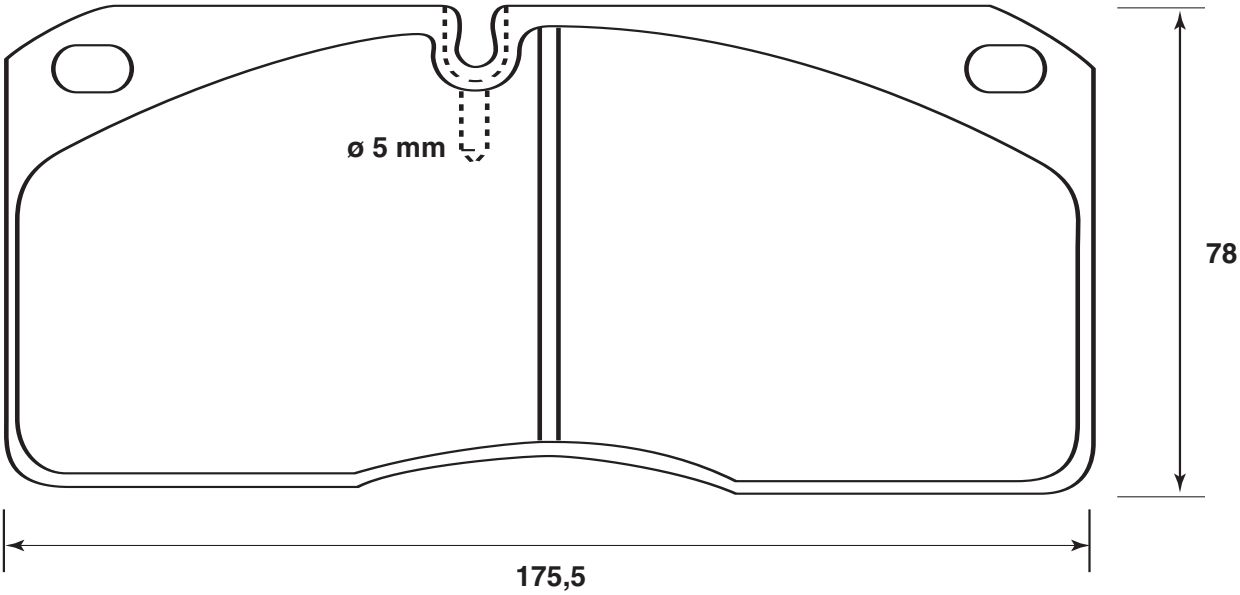

Iveco		Eurocargo	p 90
Renault Trucks (Renault VI)		Midliner / S	p 356, 358

JURID / All rights reserved 2005

	WVA	#		A	B
2906703341	29067	4	2	6	22

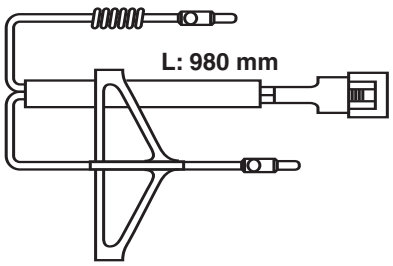

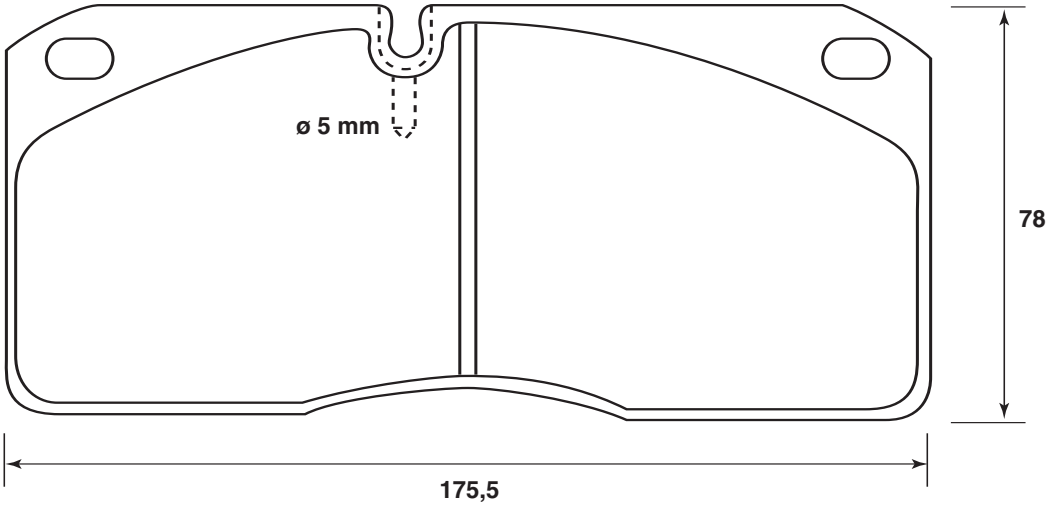

Renault Trucks (Renault VI) Midliner / S p 356, 358

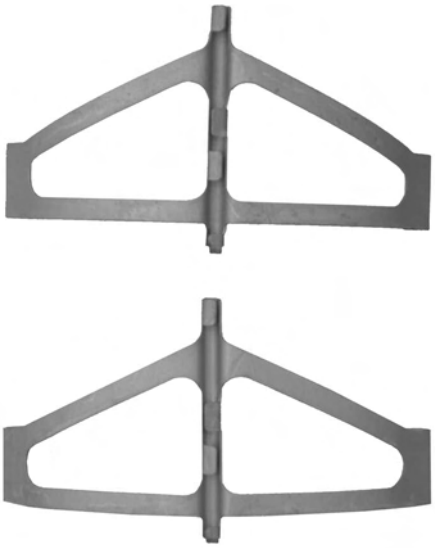

JURID by Honeywell

© JURID / All rights reserved 2005

2906703342

29067 | 4 | 2 | 6 | 22

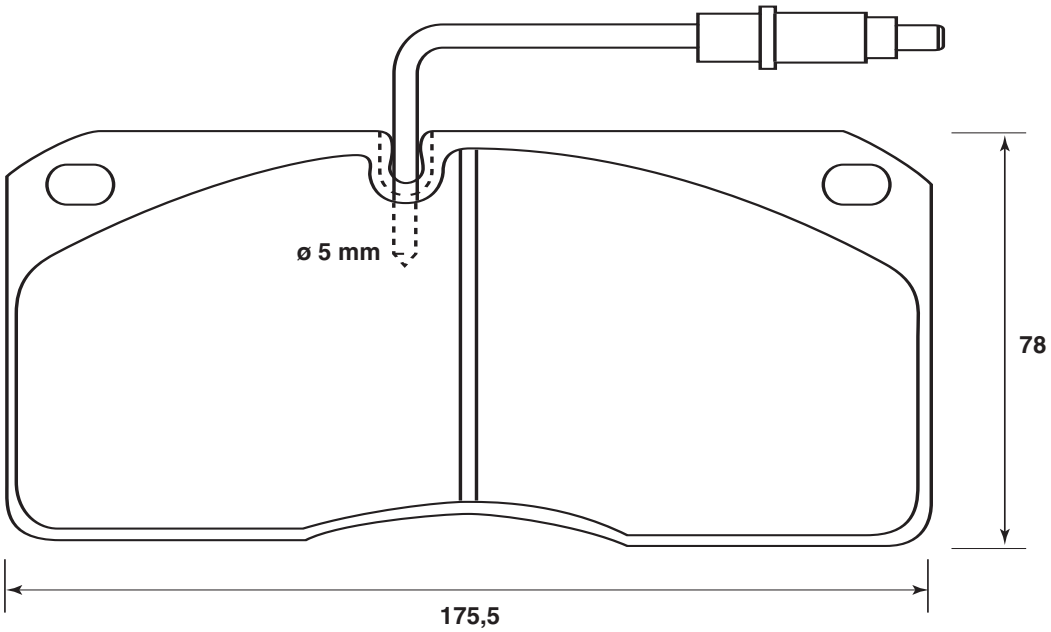

Volvo		FL4	p 430
		FL6	p 430
		FLC	p 432
		FS7	p 434

2906709560

29067 | 4 | 587002J, 587016J | 6 | 22

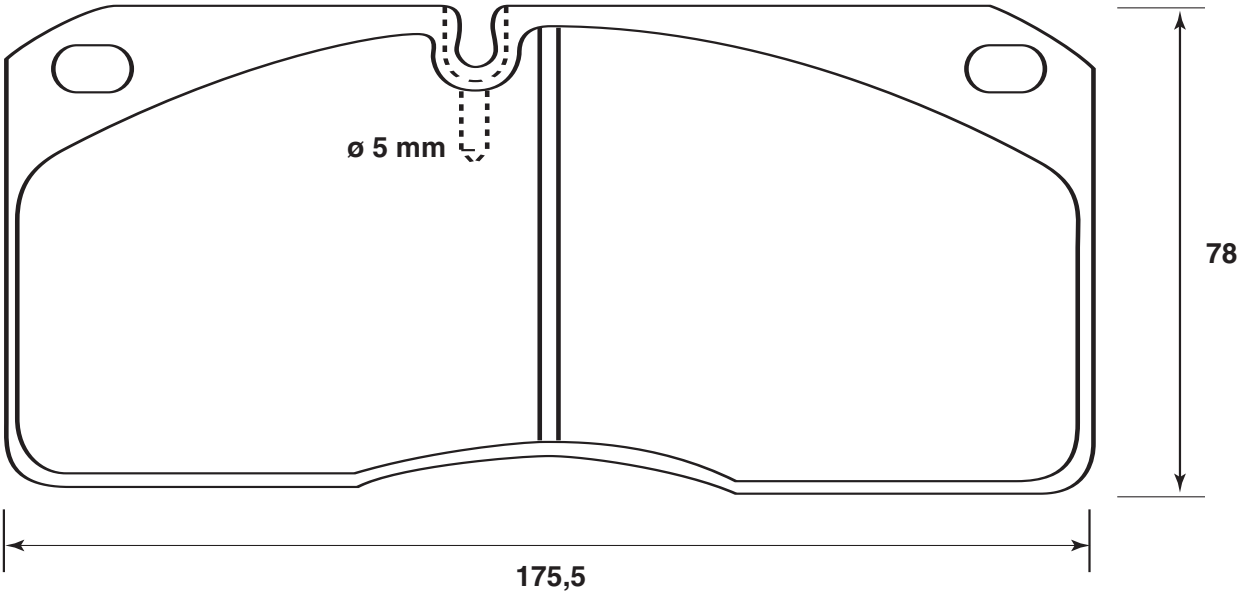

Iveco		Eurocargo	p 90
		Z	p 106, 108
Nissan (Ebro)		L80	p 306
Renault Trucks (Renault VI)		Midliner / S	p 356, 358
Volvo		FL4	p 430
		FL6	p 430
		FLC	p 432
		FS7	p 434

JURID / All rights reserved 2005

	WVA	#		A	B
2907203341	29072	8	8	5	19

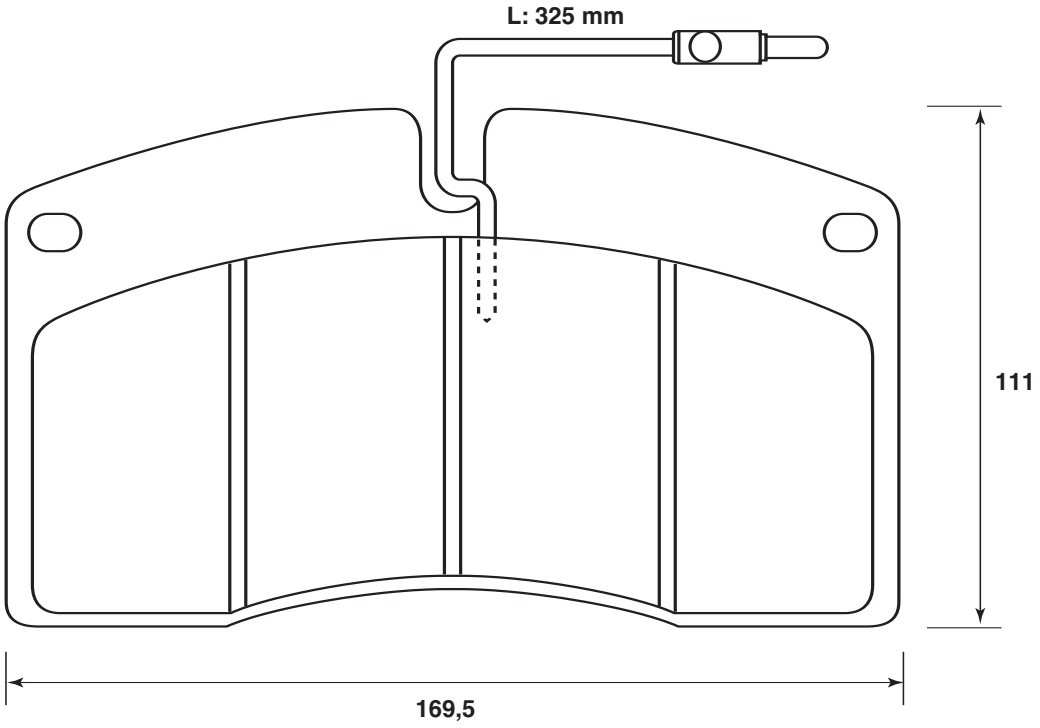

Menarini p 196
Renault Trucks (Renault VI) p 363

	WVA	#		A	B
2907209561	29072	8	8	5	19

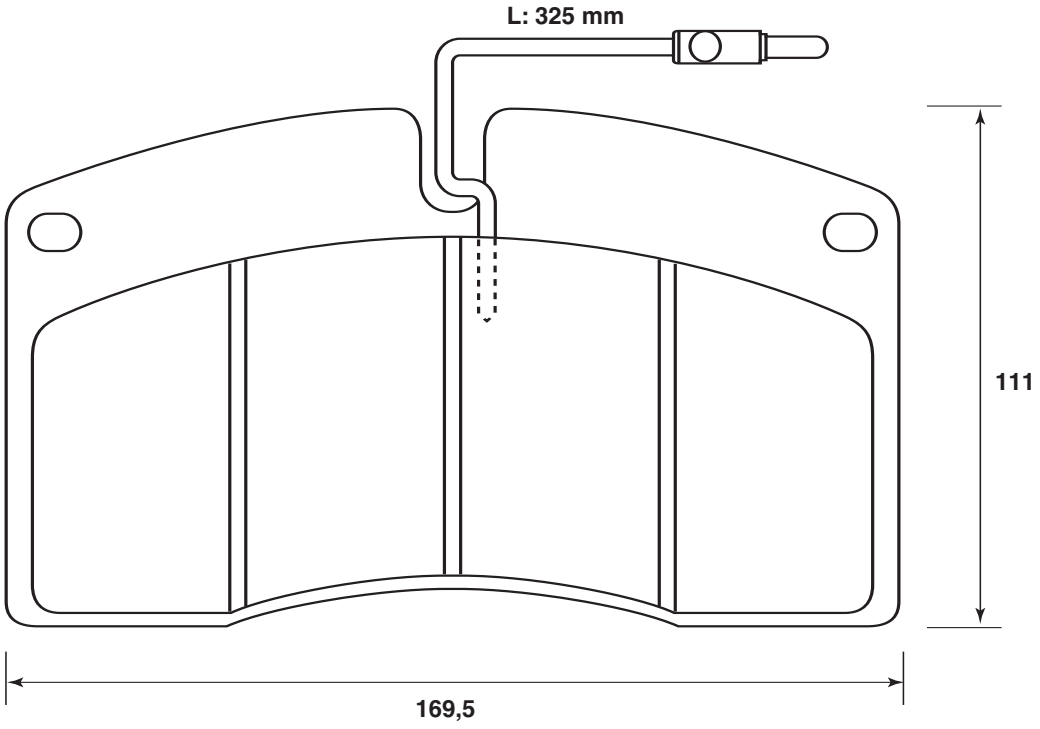

Menarini p 196

JURID by Honeywell
© JURID / All rights reserved 2005



WVA # 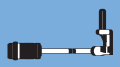

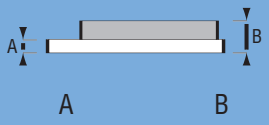

2907503341

29075 8 2 6 20

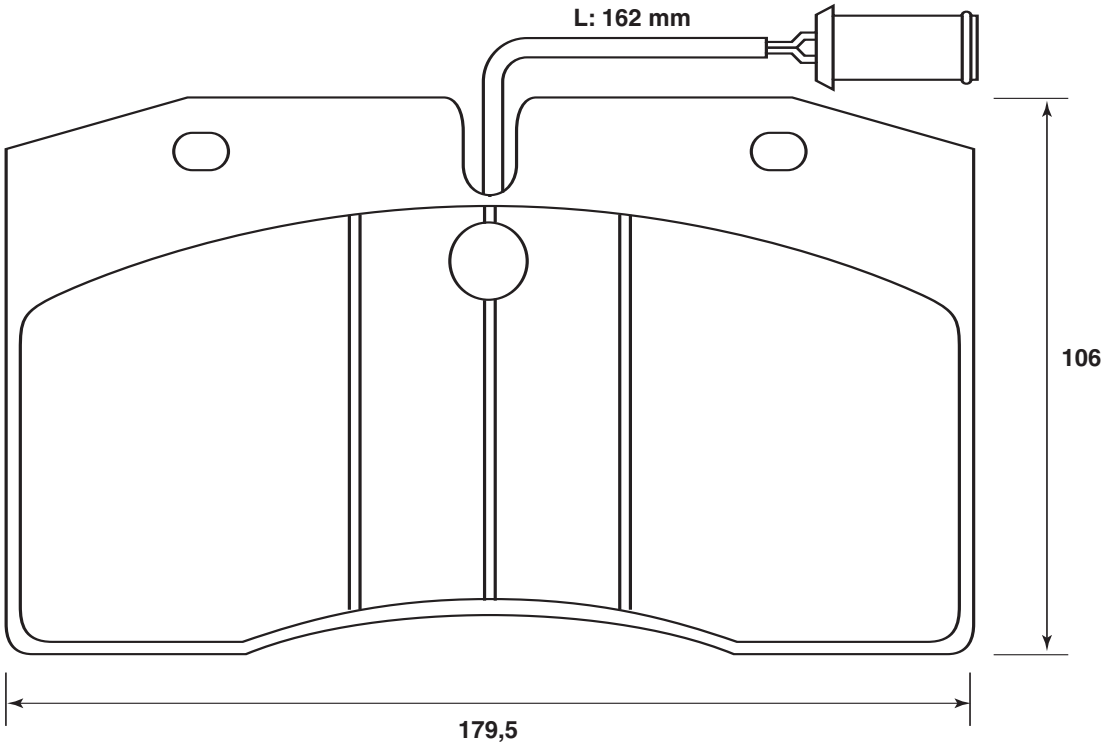

Iveco 

p 110, 112

2907509561

29075 8 2 6 20

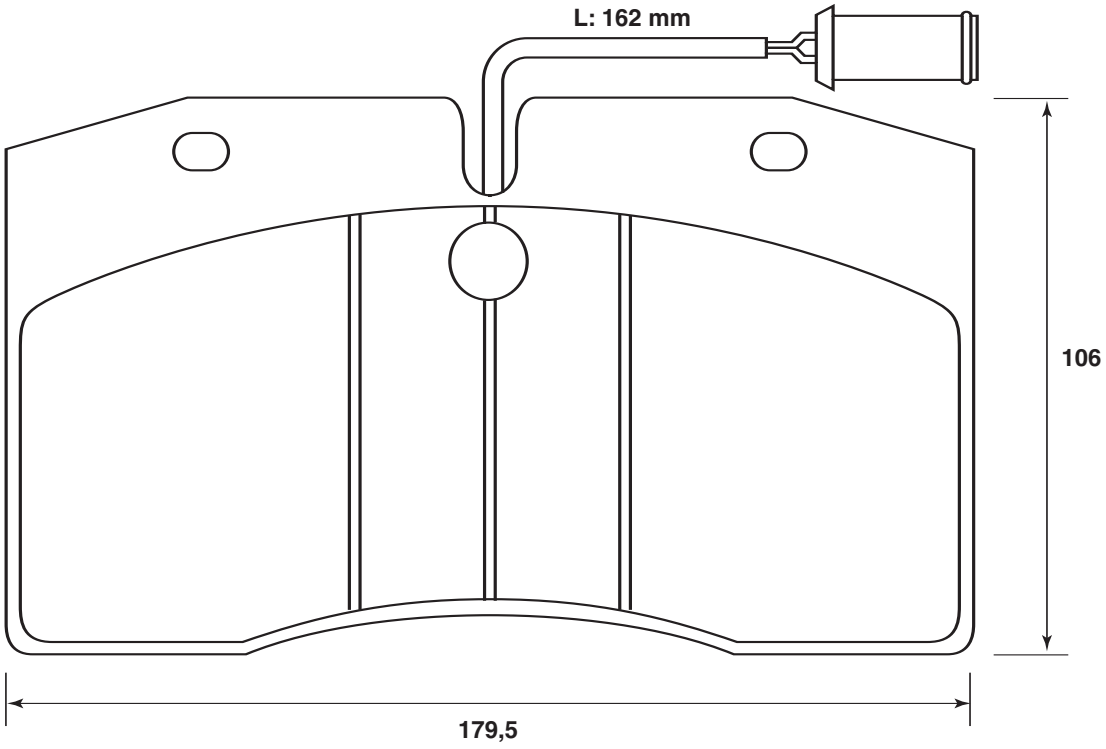

Iveco 

p 110, 112

JURID / All rights reserved 2005

JURID by Honeywell

	WVA	#		A	B
2907604530	29076	4	587010J	5	20

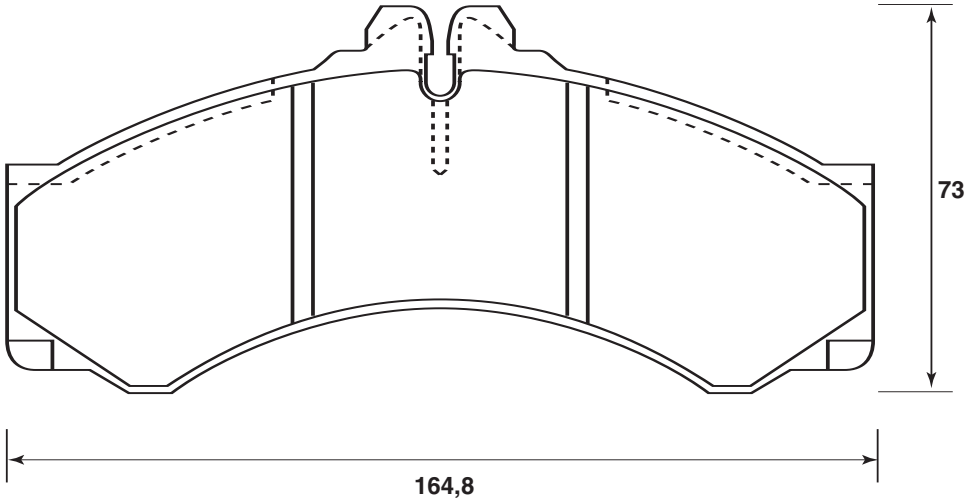

Mercedes Benz		Sprinter	p 198
Volkswagen		LT	p 414



JURID by Honeywell

© JURID / All rights reserved 2005

2907609560

29076 | 4 | 587010J | 5 | 20

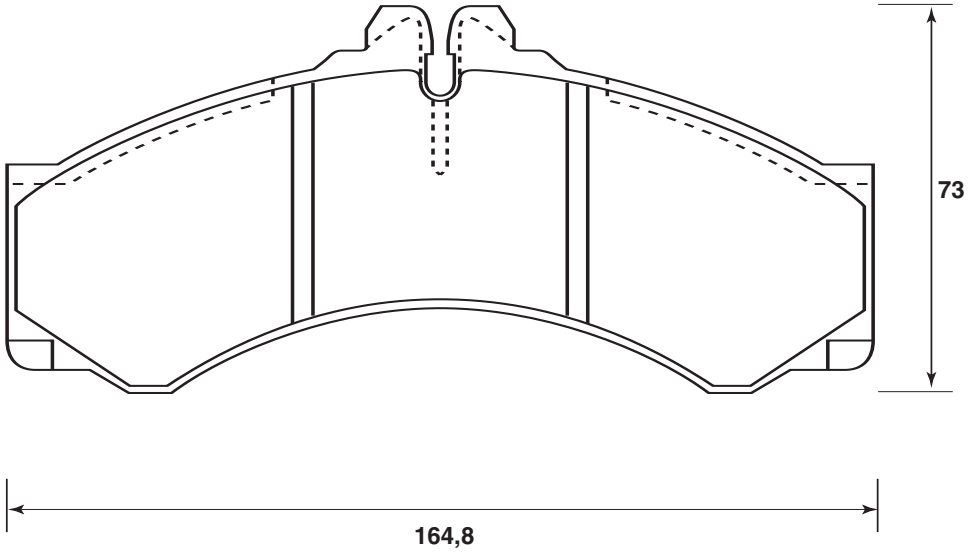

Mercedes Benz		Sprinter	p 198
Volkswagen		LT	p 414

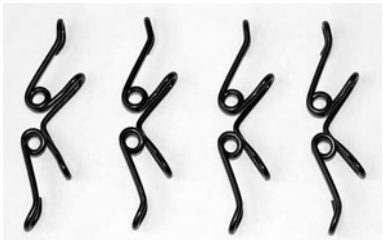

2907705390

29077 | 4 | 7 | 27

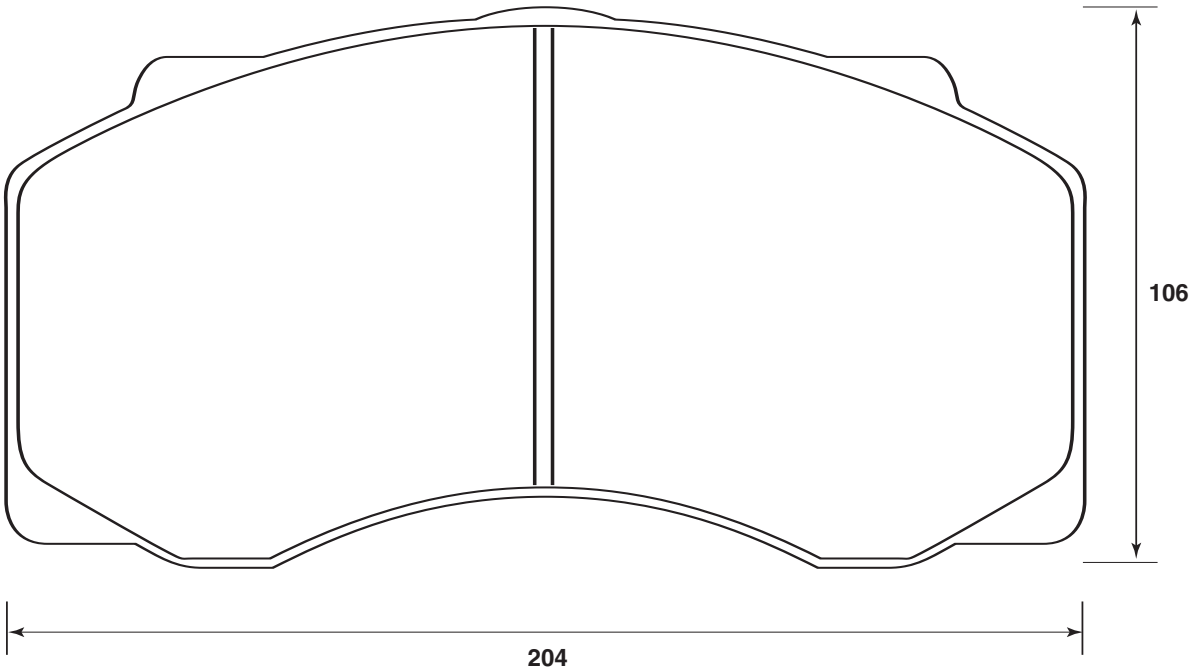

Daf		55	p 42
Leyland / DAF		FA55	p 144
Perrot (Wabco)			p 326
Wabco (Perrot)			p 440

JURID / All rights reserved 2005

	WVA	#		A	B
2907709561	29077	4	2	7	27

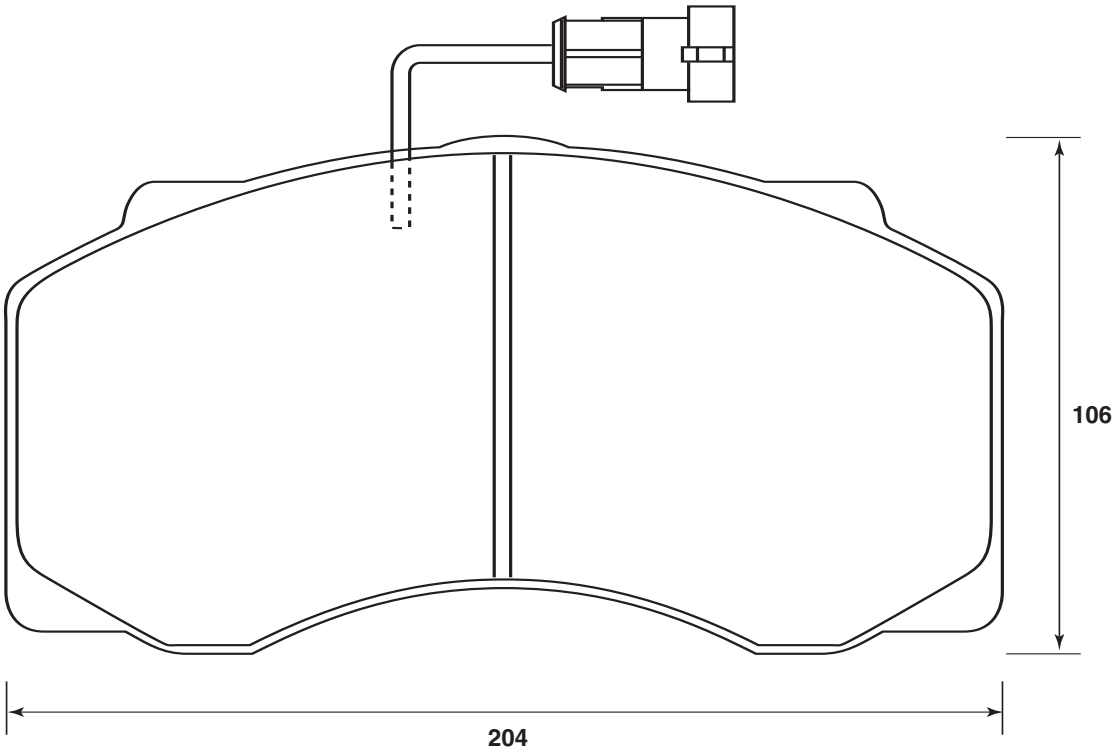

Daf		55	p 42
Leyland / DAF		FA55	p 144
Perrot (Wabco)			p 326
Wabco (Perrot)			p 440

JURID / All rights reserved 2005

	WVA	#		A	B
2908809560	29088	4	587022J	7	26

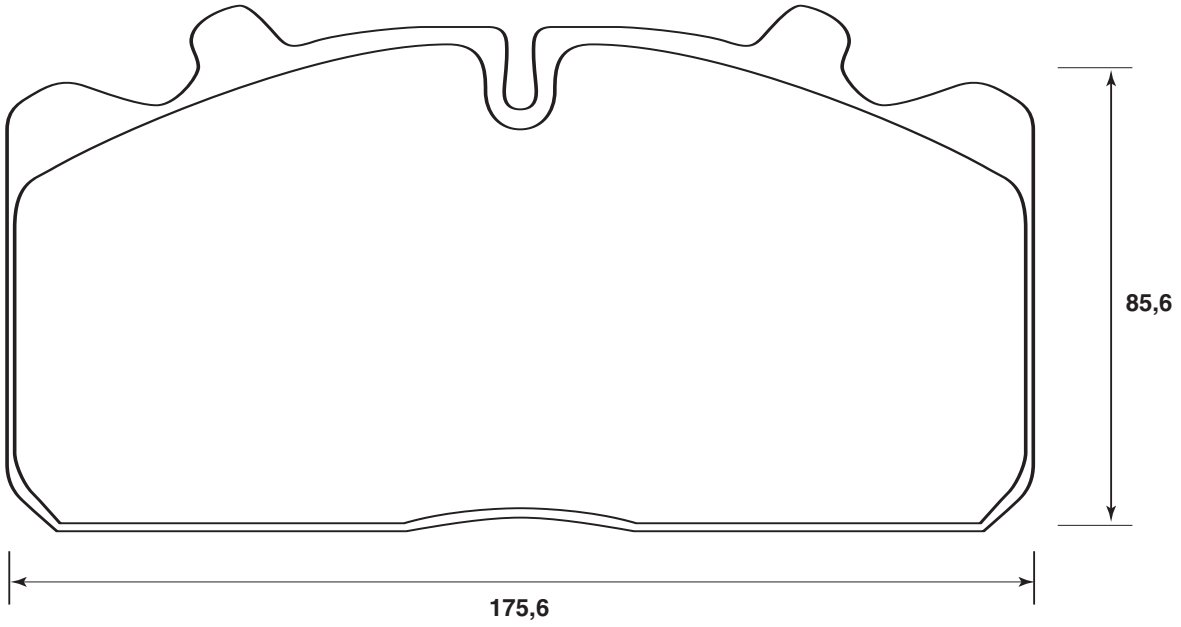

Daf		LF45	p 46
Iveco		Eurocargo	p 90
MAN		L 2000	p 178, 180
		M 2000	p 180
			p 194
Perrot (Wabco)			p 326
Renault Trucks (Renault VI)		Midlum	p 358
Wabco (Perrot)			p 440

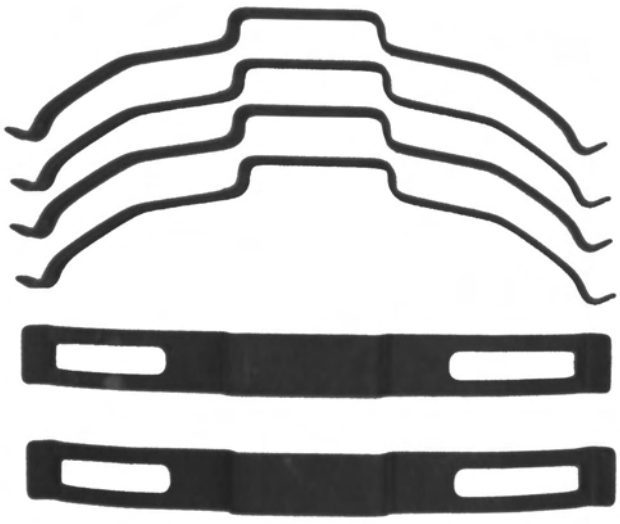

JURID / All rights reserved 2005

	WVA	#		A	B
2909005390	29090	4	587026J, 587027J	11	28

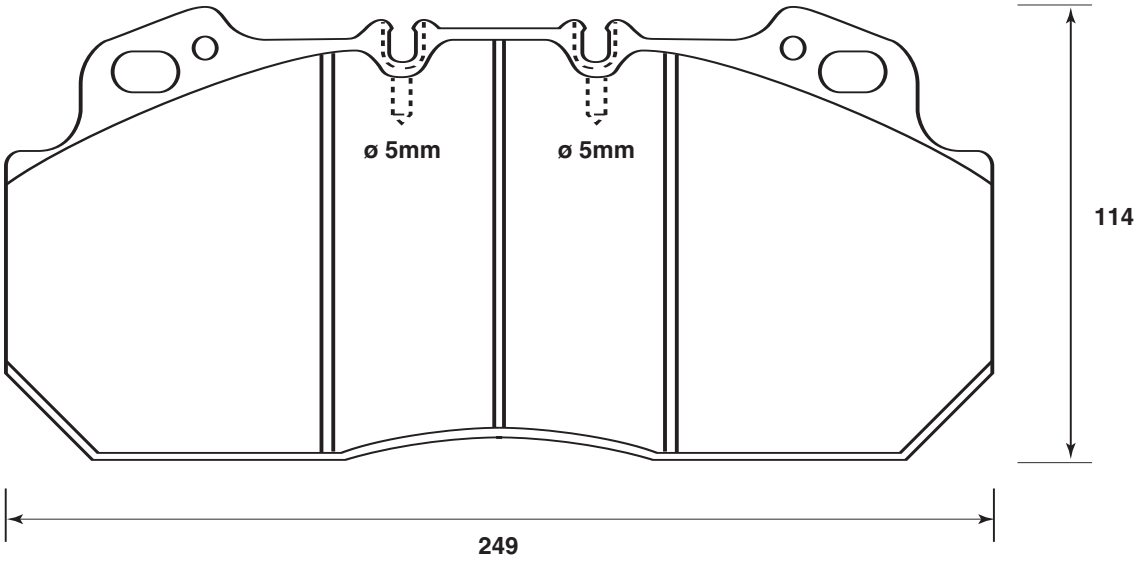

Meritor / ROR p 292

Renault Trucks (Renault VI) Manager / G p 354

JURID / All rights reserved 2005

	WVA	#		A	B
2909005391	29090	4	2	11	28

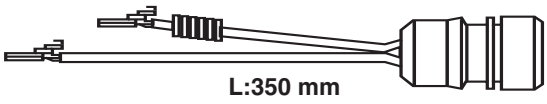

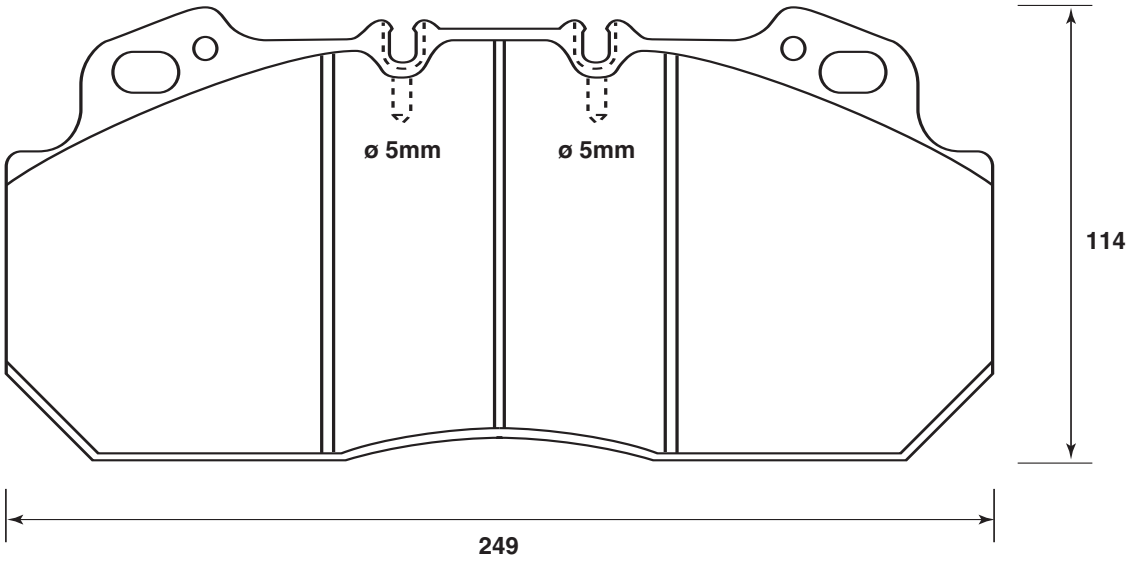

Renault Trucks (Renault VI)		Magnum / AE	p 342
Volvo			p 436

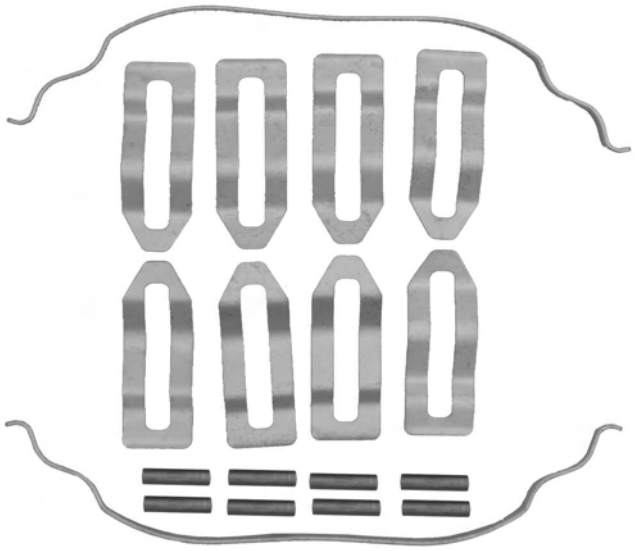

JURID / All rights reserved 2005

	WVA	#		A	B
2909005392	29090	4	2	11	28

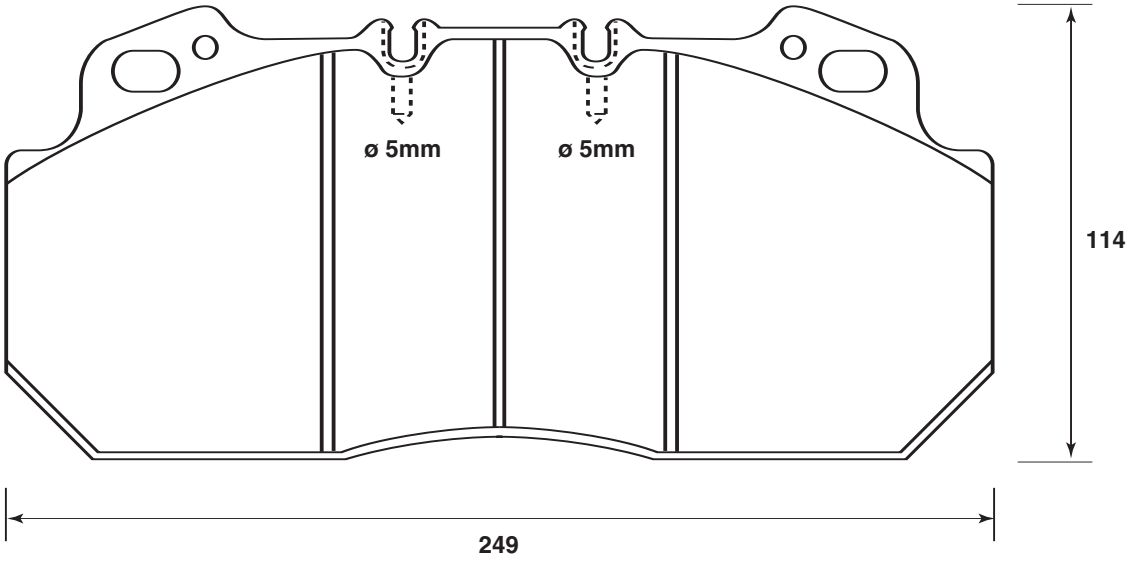

Heuliez			p 80
Renault Trucks (Renault VI)		Premium	p 362

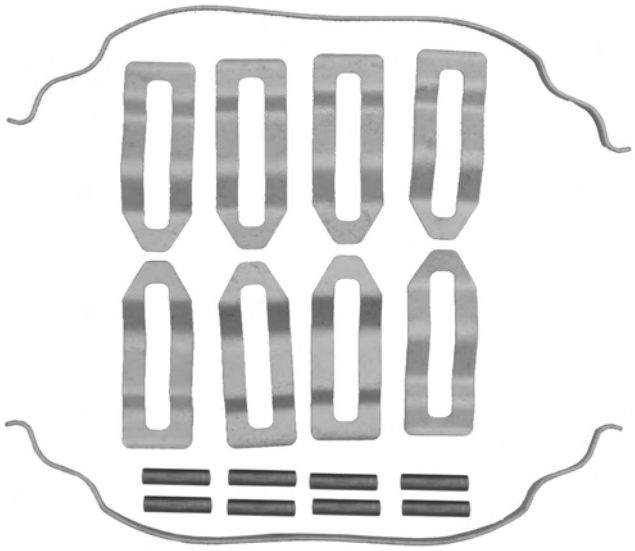

JURID / All rights reserved 2005

	WVA	#		A	B
2909009560	29090	4	587026J, 587027J	11	28

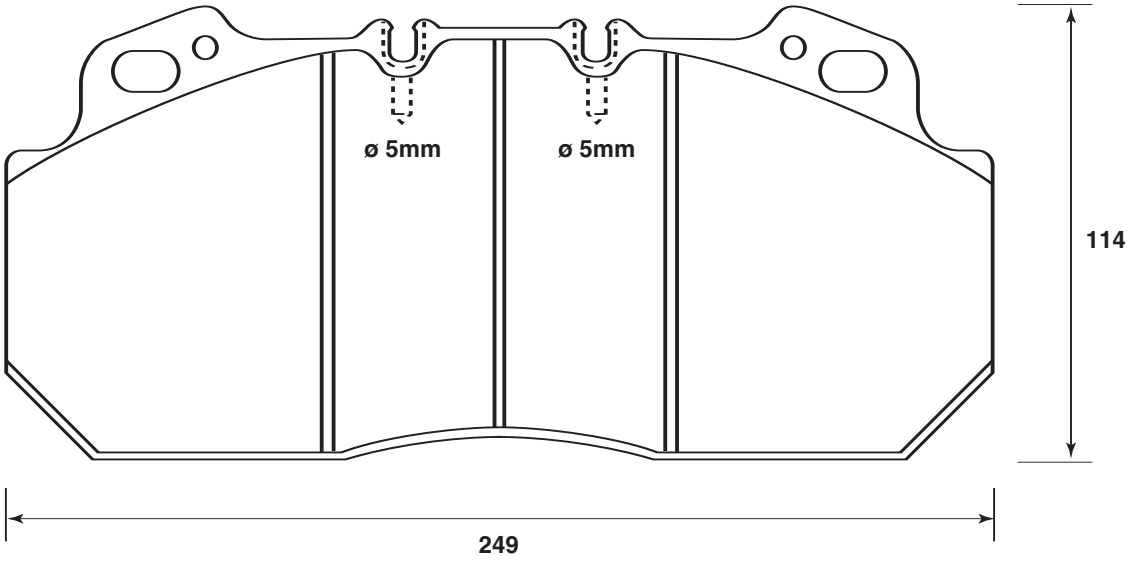

Dennis			p 54
			p 54
Heuliez			p 80
Meritor / ROR			p 292
Renault Trucks (Renault VI)		Magnum / AE	p 342
		Manager / G	p 354
		Premium	p 362
Volvo			p 436

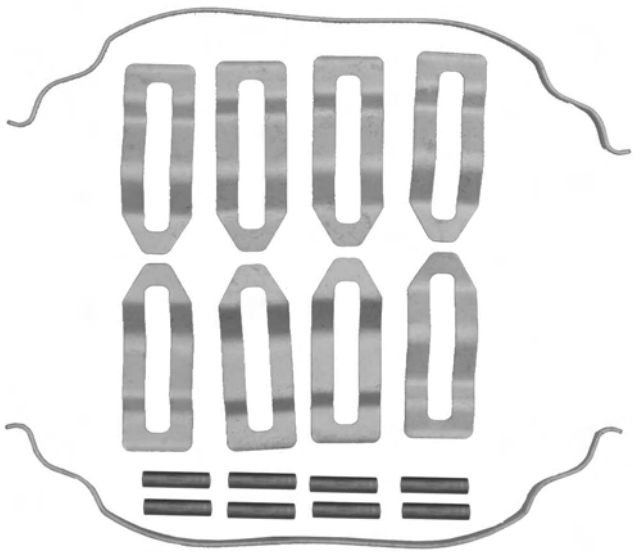

JURID / All rights reserved 2005

JURID by Honeywell



WVA #

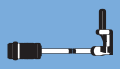



2909103010

29091 587022J 8 27

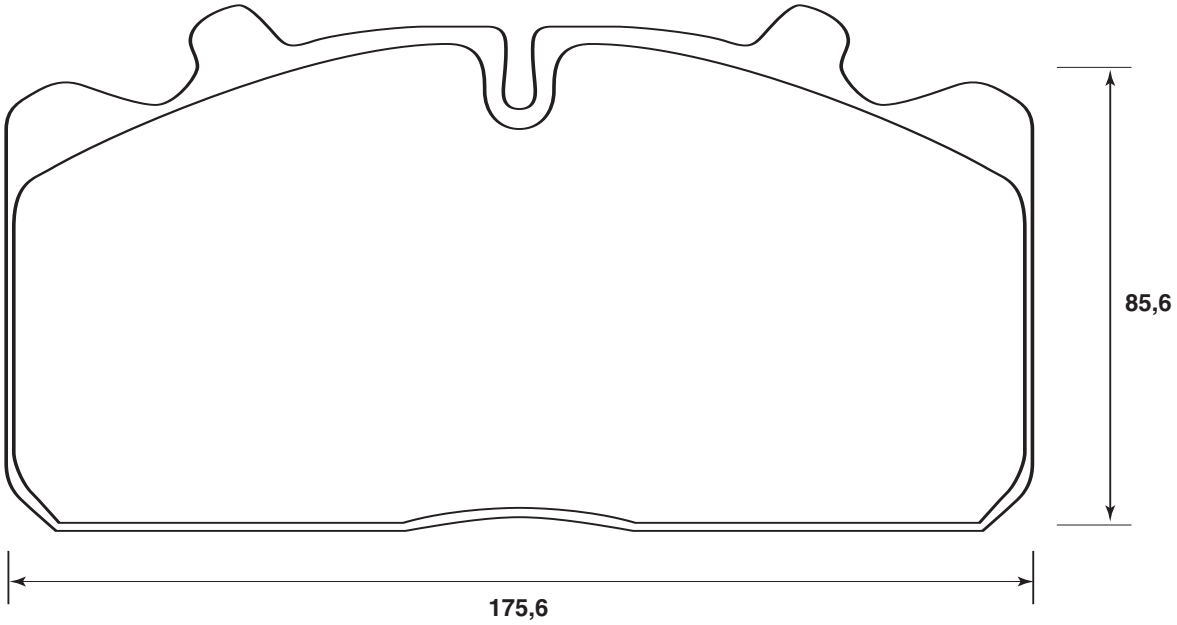

MAN		L 2000	p 178
		M 2000	p 180
			p 192, 194

JURID by Honeywell

© JURID / All rights reserved 2005

	WVA	#		A	B
2909305390	29093	4	587020J	9	30

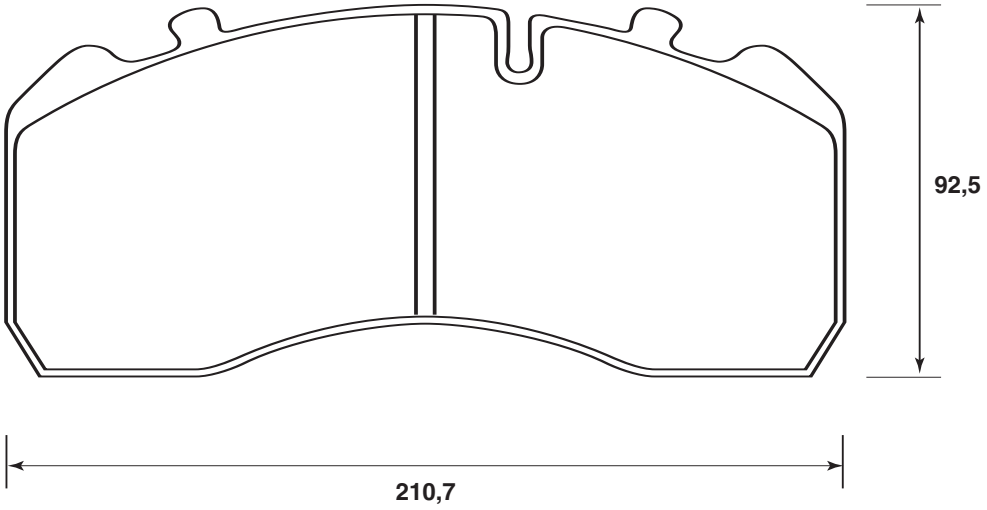

Bova	Futura		p 18
BPW			p 20
Daf	SB		p 48
Iveco	Eurocargo		p 90
Knorr			p 136
MAN	M 2000		p 180
Mercedes Benz	Atego		p 204, 206
Mercedes Benz / Evobus	Tourino		p 290
SAE Dupillier			p 374
SAF Sauer			p 376

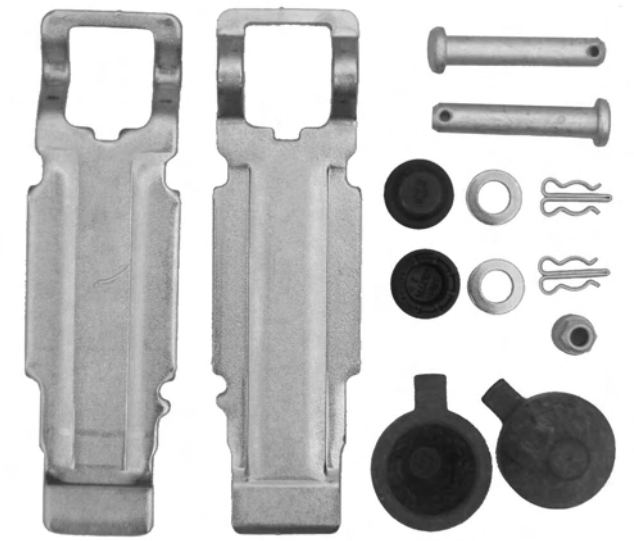

JURID / All rights reserved 2005

	WVA	#		A	B
2910009560	29100	4		7	25

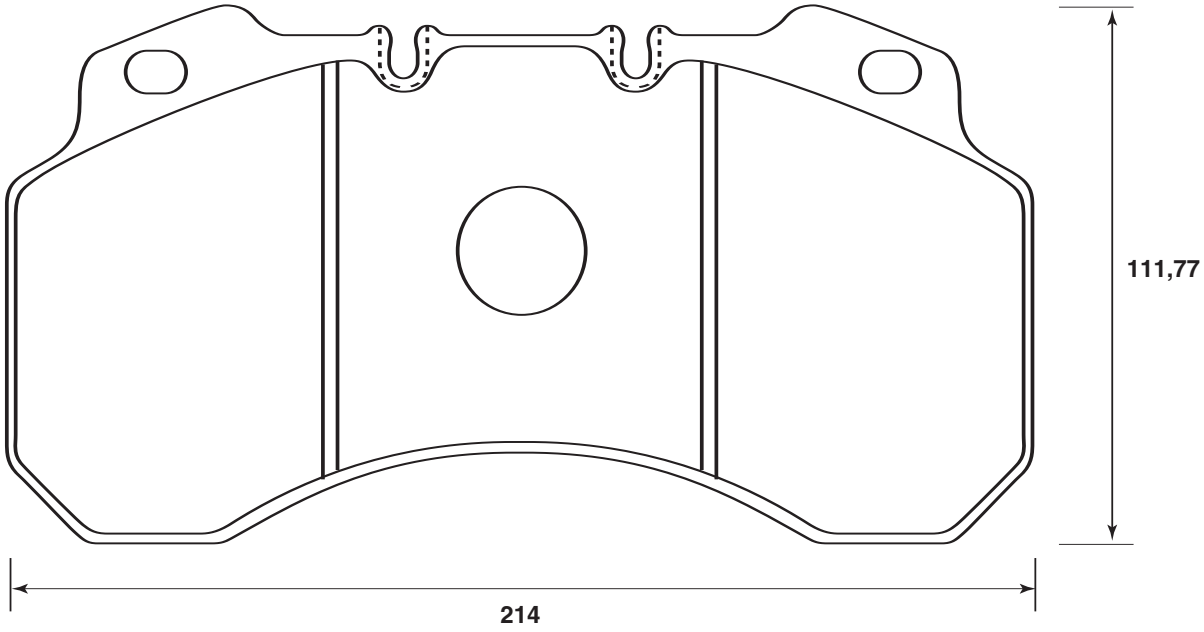

Meritor / ROR			p 292
Nissan (Ebro)		EcoT	p 304
Renault Trucks (Renault VI)		Midliner / M	p 356
		Midlum	p 360

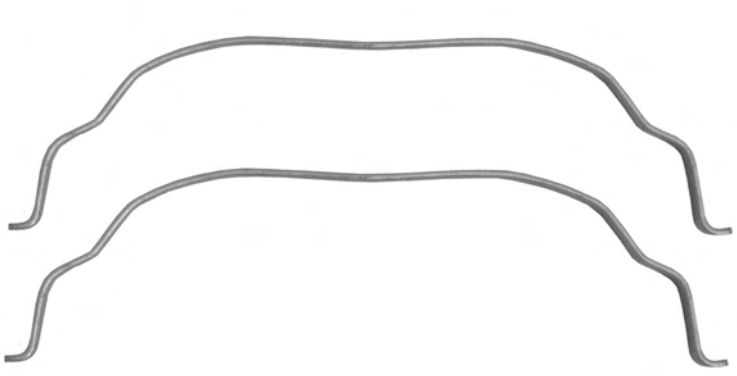

JURID by Honeywell

© JURID / All rights reserved 2005

WVA	#		A	B
2910815390	29108	4	587028J	9	30

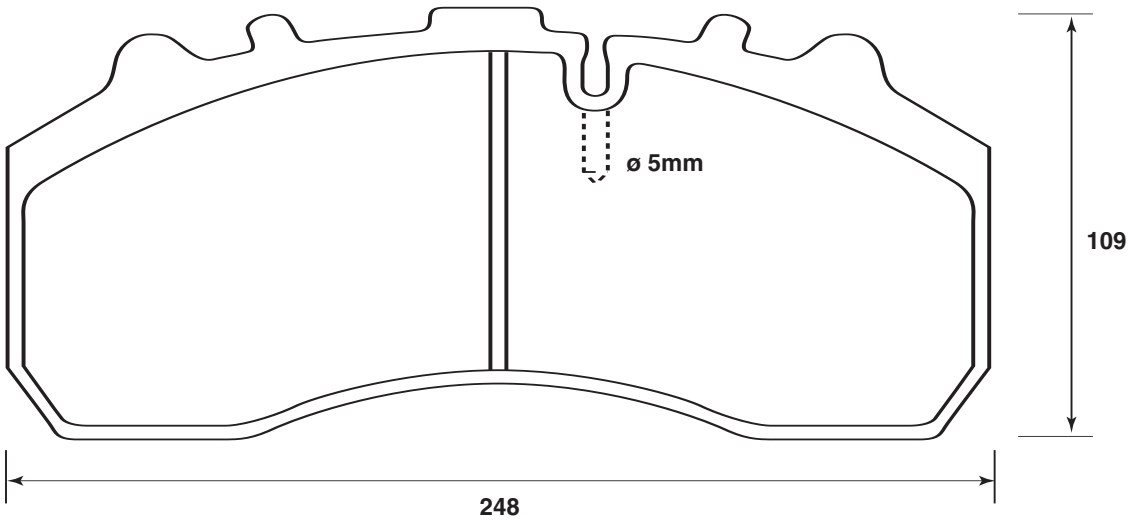

Bova	Futura	p 18
BPW		p 20
Crane Fruehauf		p 30
Daf	65CF, 75CF	p 42
	85CF	p 44
	95XF, LF55	p 46
Dennis		p 54
Fruehauf		p 76
Hendrickson		p 80
Iveco	Eurostar	p 90, 92, 94
	Eurotech	p 94, 98, 100
	Stralis	p 101
Karosa		p 126
Kassbohrer / Setra		p 134
Knorr		p 136
Lecinena		p 140
Lecitrailer		p 142
MAN	F 2000	p 164
	TG-A	p 188
Mercedes Benz		p 196
	Actros	p 202, 204
	Atego	p 206
	Axor, Econic	p 208
Mercedes Benz / Evobus	Niederflur, O100	p 276
	O505, O520, O530	p 284
	O550, O580	p 286
Neoplan	Cityliner, Jetliner	p 296
	Niederflurbusse	p 298
	Skyliner, Spaceliner, Transliner	p 300
SAE Dupillier		p 374
SAF Sauer		p 376
Scania	L	p 382
	S 4 P	p 388
	S 4 R, S 4 T, Serie R	p 390
		p 392
SMB		p 396
Trailor		p 406
ZF		p 448

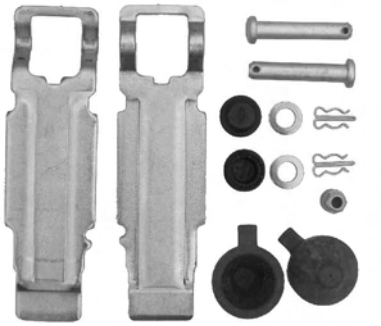

©JURID / All rights reserved 2005

JURID by Honeywell

	WVA	#		A	B
2911509100	29115	4		7	27

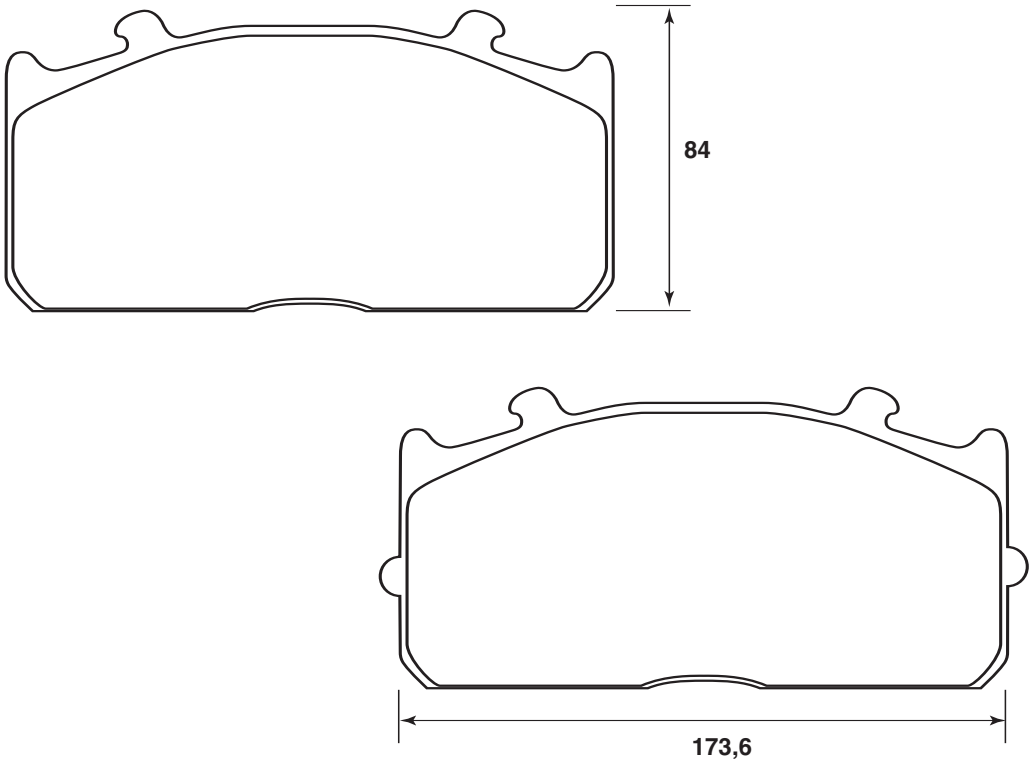

Knorr			p 136
Mercedes Benz		Atego	p 206

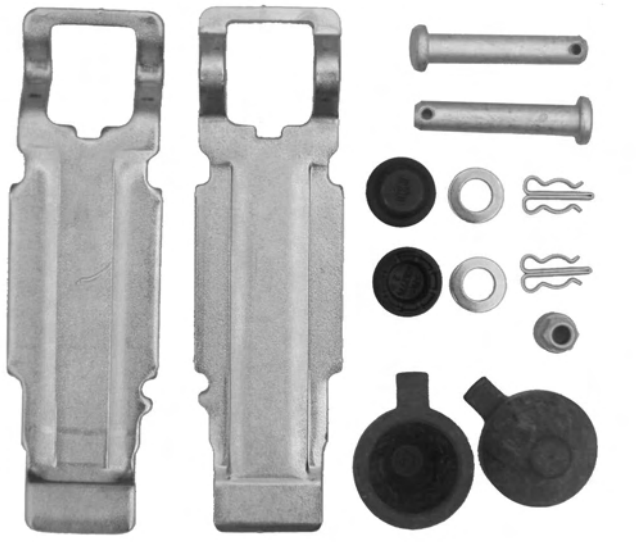

JURID / All rights reserved 2005

	WVA	#		A	B
2912009560	29120	4		8	30

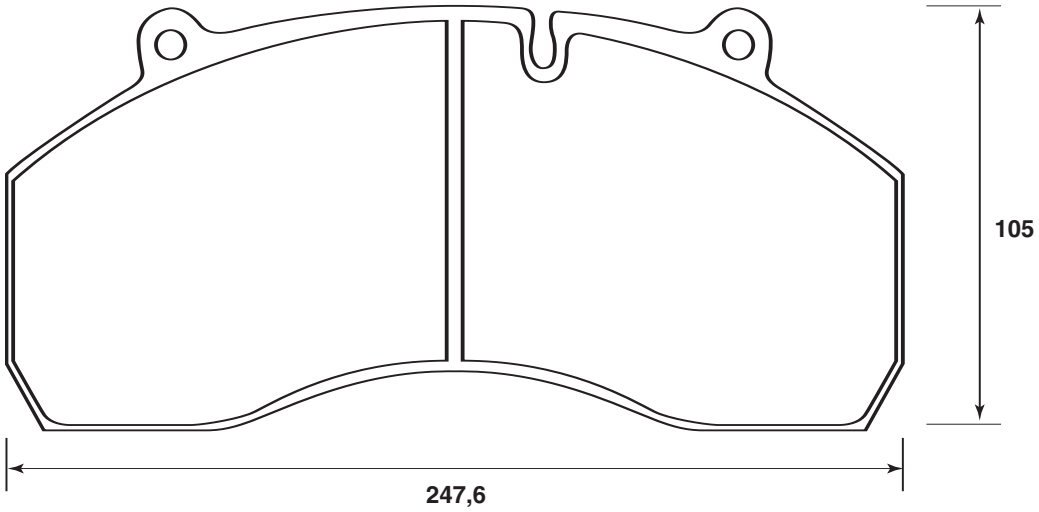

Haldex		p 78
SAF Sauer		p 376
SMB		p 396



JURID / All rights reserved 2005

	WVA	#		A	B
2912104530	29121	4	2	5	20

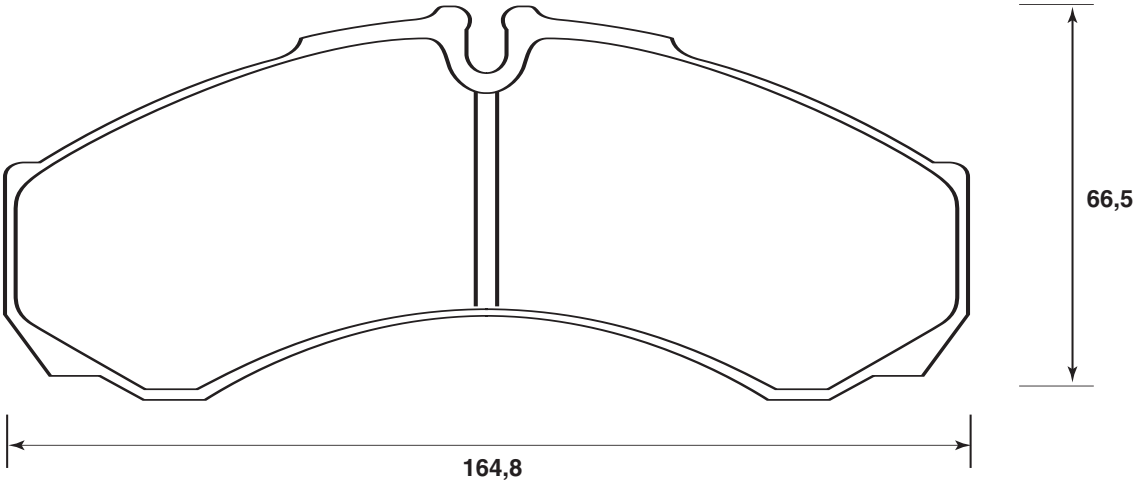

Renault Trucks (Renault VI) Mascott p 338, 340



JURID / All rights reserved 2005

	WVA	#		A	B
2912104531	29121	4		5	20

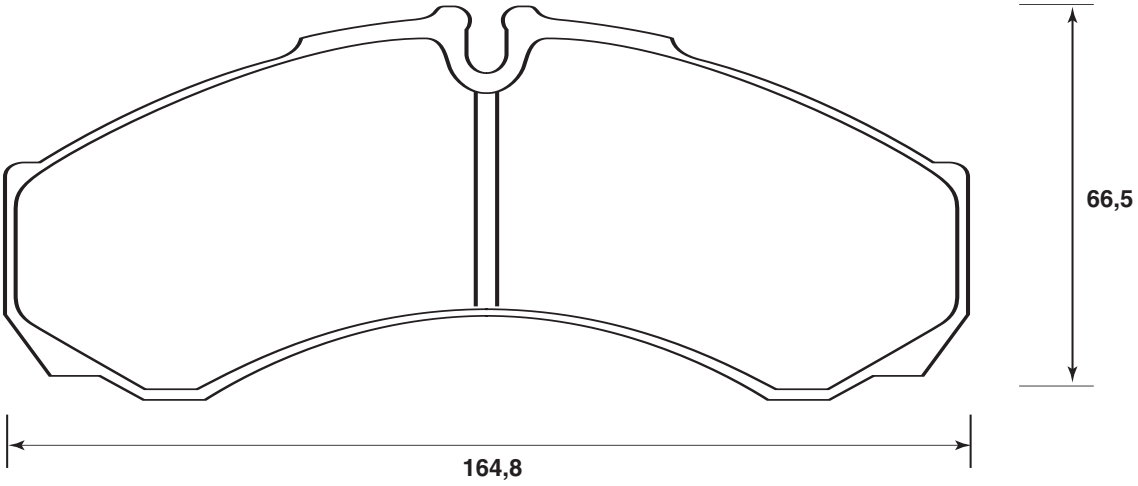

Iveco		Daily	p 86
		Daily II	p 88



JURID / All rights reserved 2005

	WVA	#		A	B
2912114530	29121	4		5	18

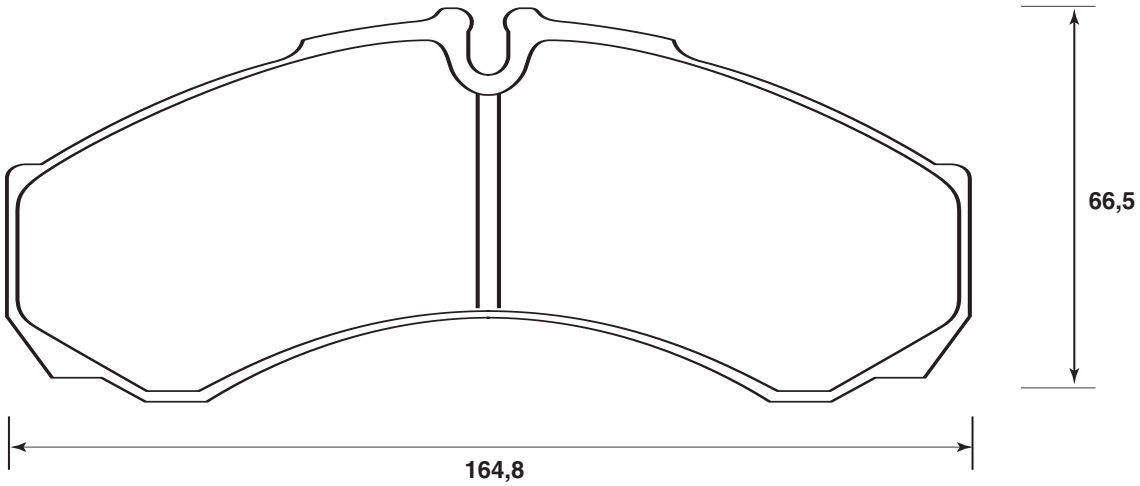

Iveco		Daily II	p 88



JURID / All rights reserved 2005

	WVA	#		A	B
2912409560	29124	4		7	27

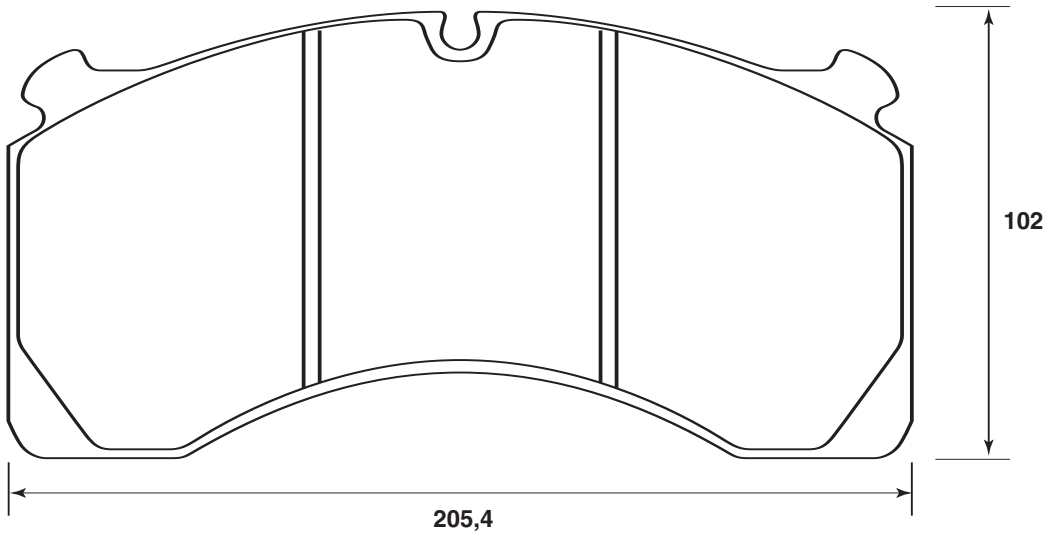

Meritor / ROR p 290

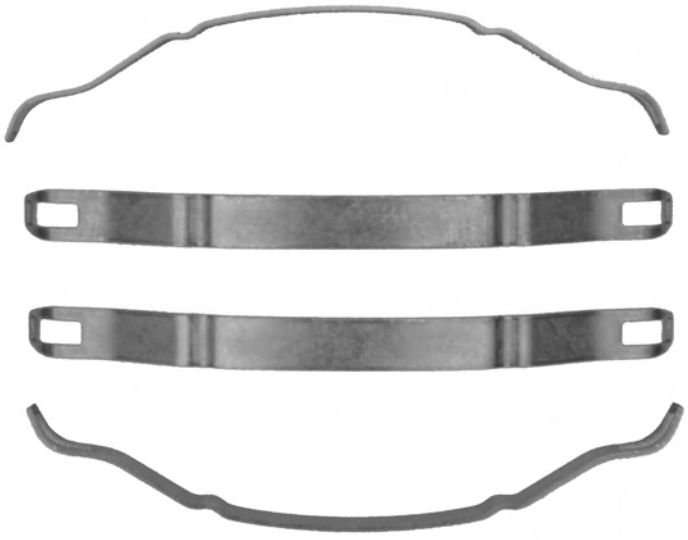

JURID / All rights reserved 2005

JURID by Honeywell

	WVA	#		A	B
2912509560	29125	4		9	29

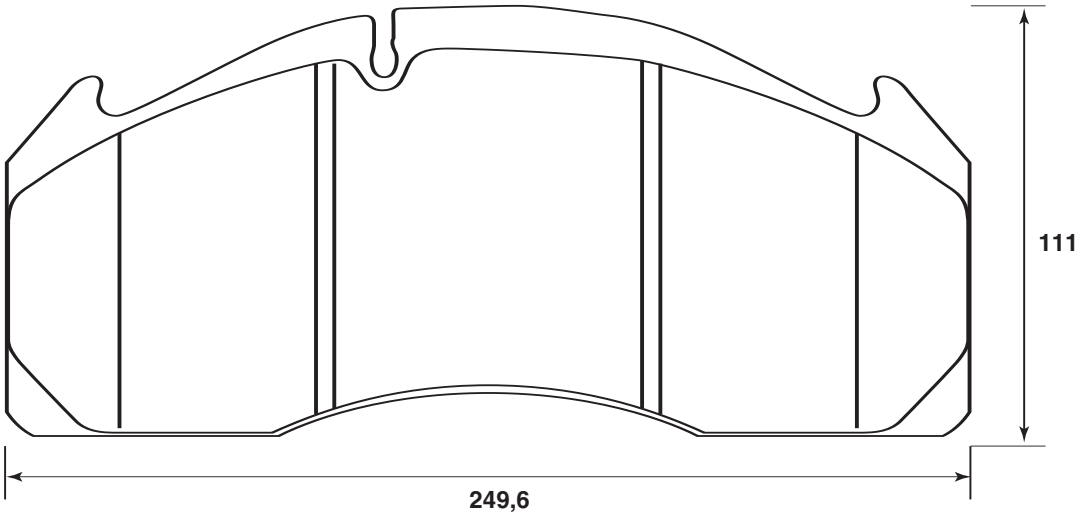

Meritor / ROR			p 292
Volvo		FH12	p 424
		FH16	p 424
		FL	p 432
		FM12	p 432
		FM9	p 432

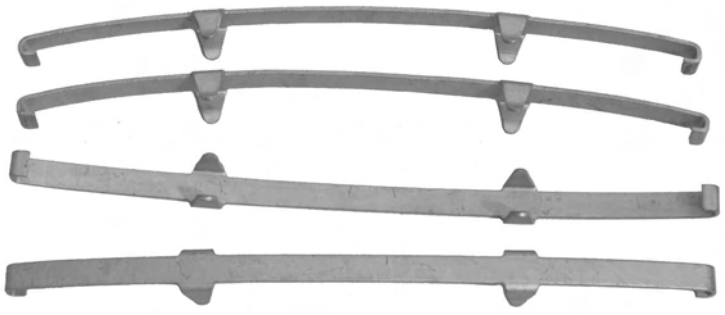

JURID / All rights reserved 2005

	WVA	#		A	B
2912605399	29126	4		9	30

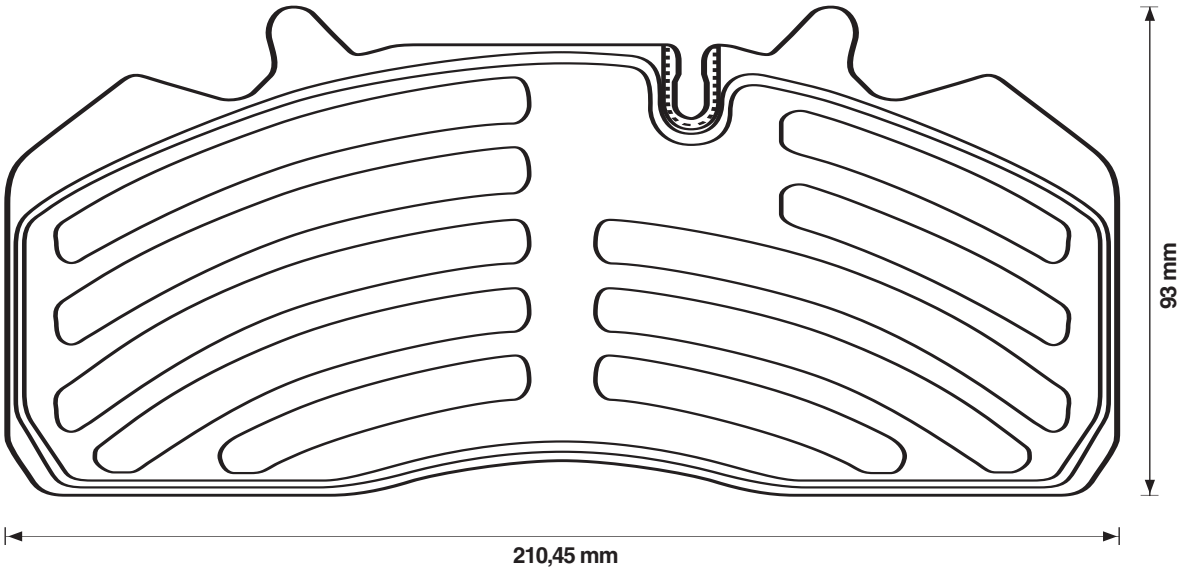

Perrot (Wabco)		p 324
SAF Sauer		p 376
SMB		p 396
Wabco (Perrot)		p 440

JURID / All rights reserved 2005

	WVA	#		A	B
2913109560	29131	4		8	30

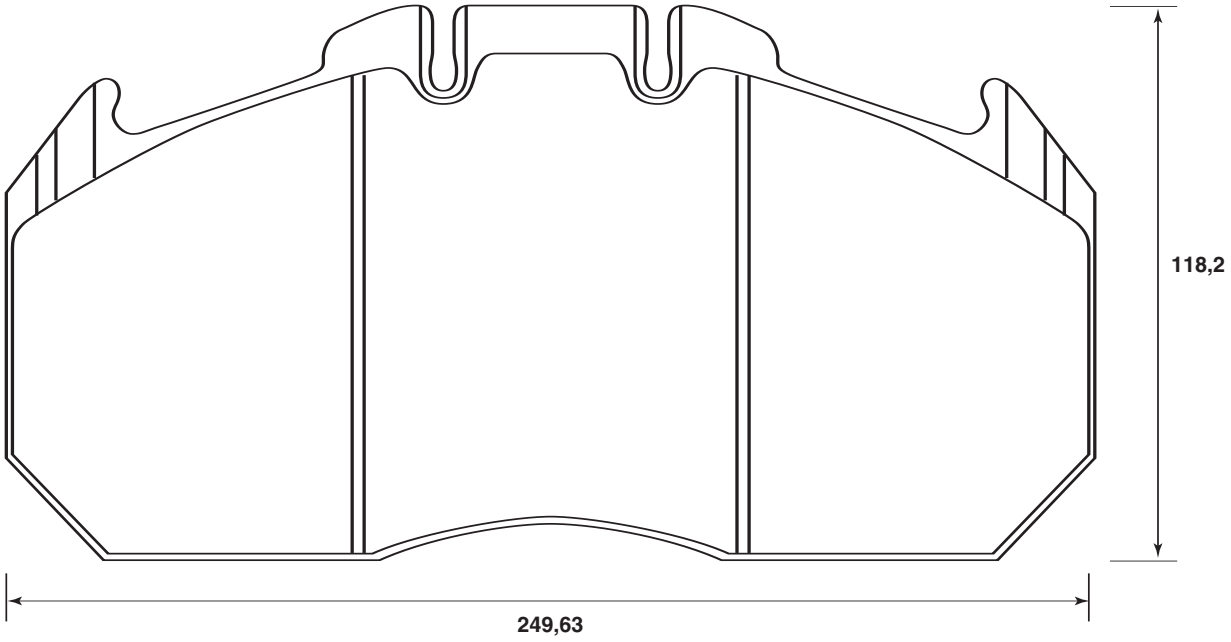

MAN		TG-A	p 188
Meritor / ROR			p 292
Neoplan		Centroliner	p 296
Renault Trucks (Renault VI)		Magnum E. Tech	p 346
		Midlum	p 360
		Premium	p 360
			p 363

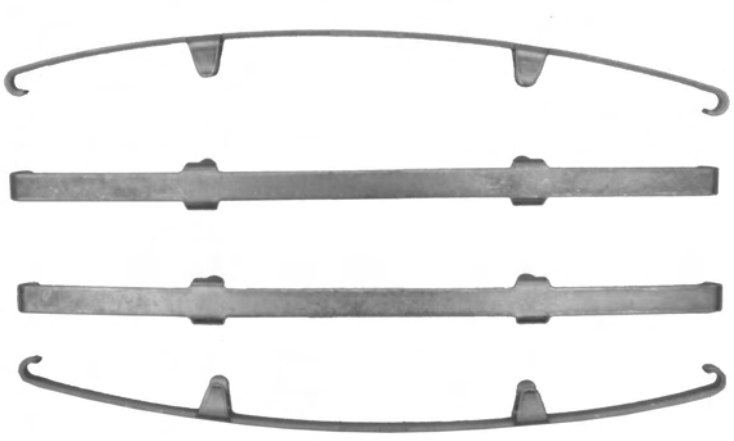

JURID / All rights reserved 2005

	WVA	#		A	B
2913609560	29136	4		9	29

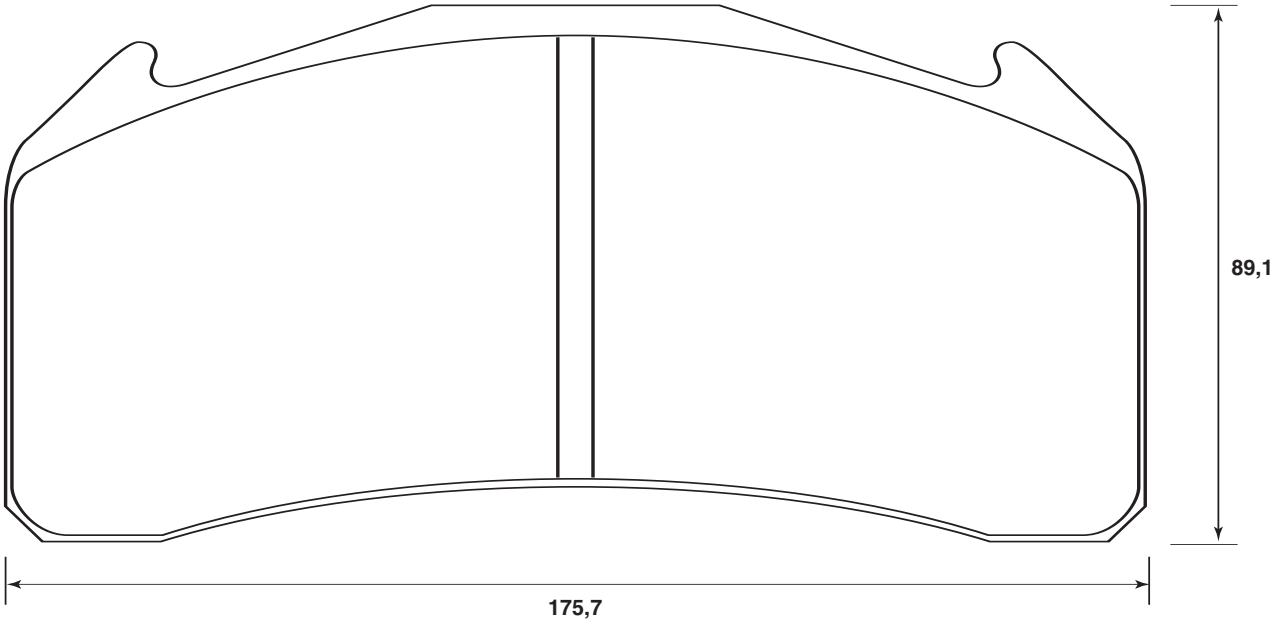

Meritor / ROR			p 292
Volvo		FL	p 432

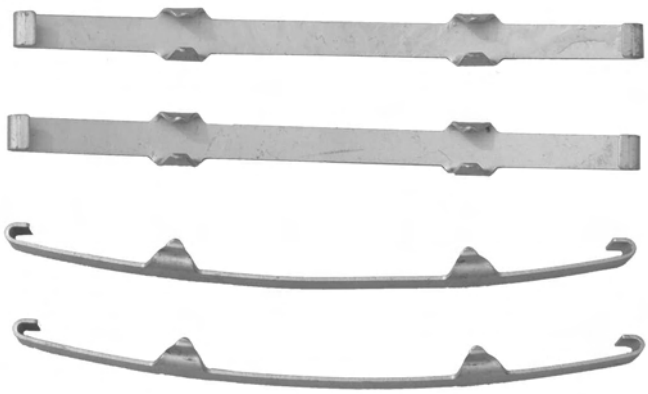

JURID / All rights reserved 2005

	WVA	#		A	B
2913709560	29137	4		9	29

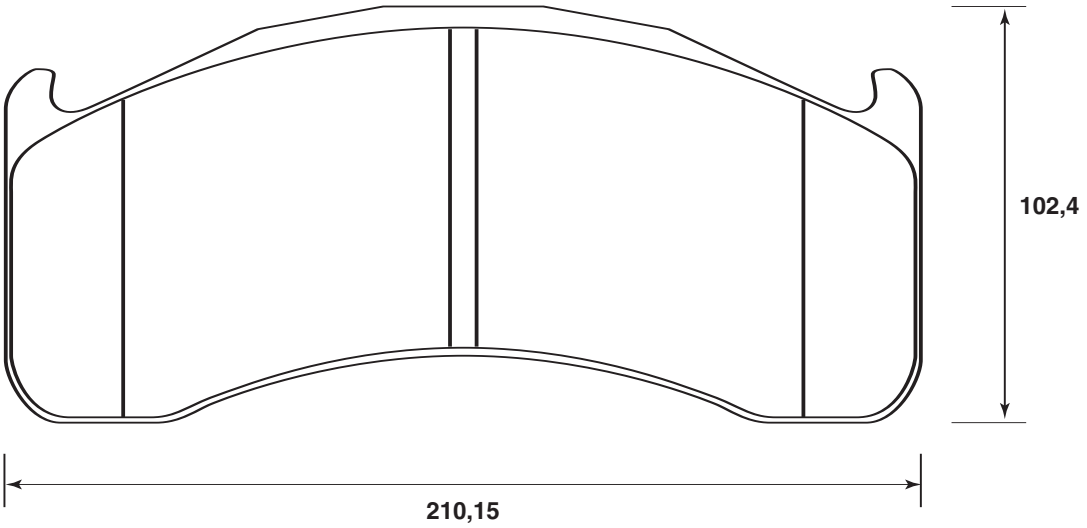

Meritor / ROR			p 292
Volvo		FL	p 432

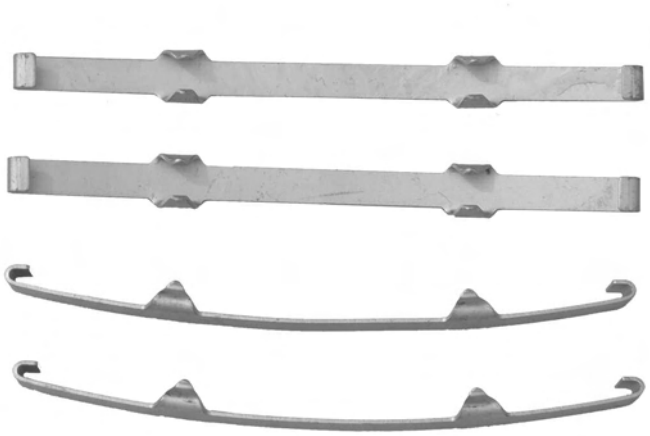

JURID / All rights reserved 2005

	WVA	#		A	B

2914209569

29142	4		9	30

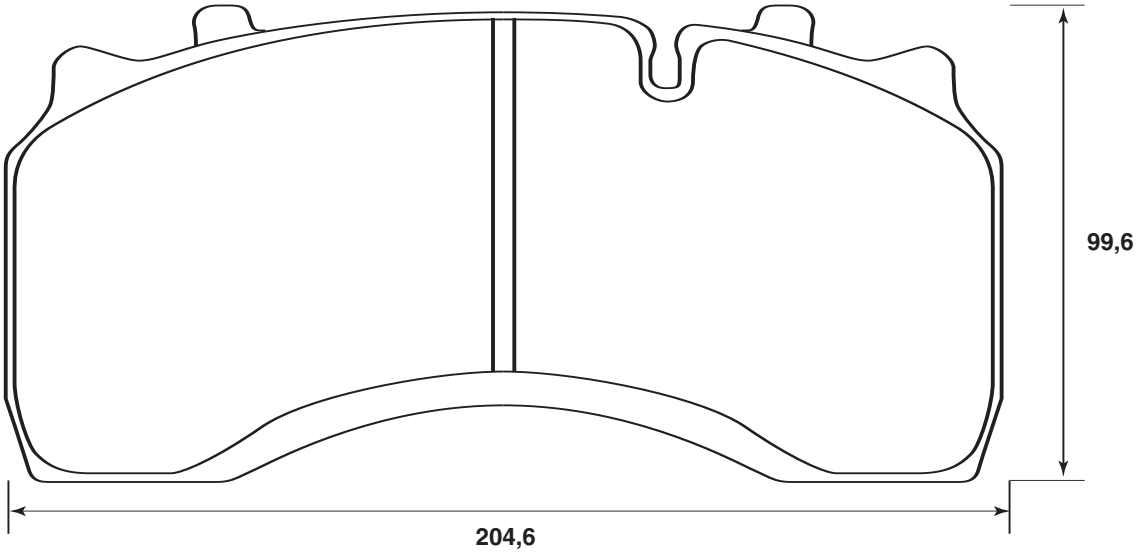

Daf		LF55	p 46
Perrot (Wabco)			p 324
Renault Trucks (Renault VI)		Midlum	p 360
Wabco (Perrot)			p 438

2914305390

29143	4		8	30

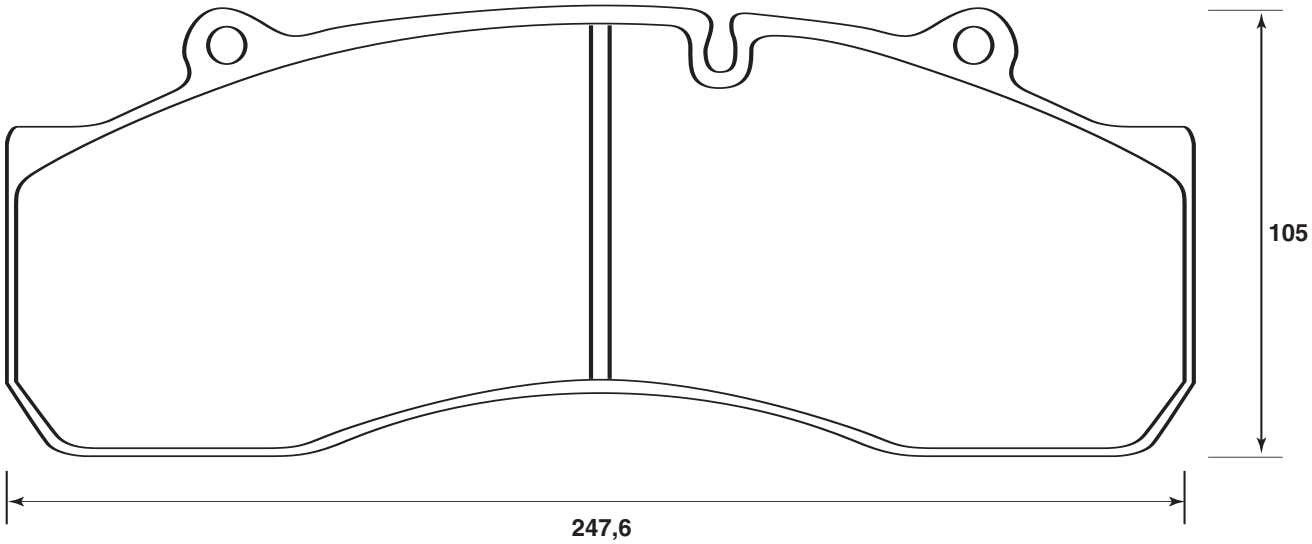

Haldex		p 78
SAF Sauer		p 376
SMB		p 396

© JURID / All rights reserved 2005



WVA #

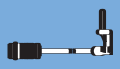

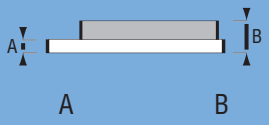

2915805390

29158 4 7 30

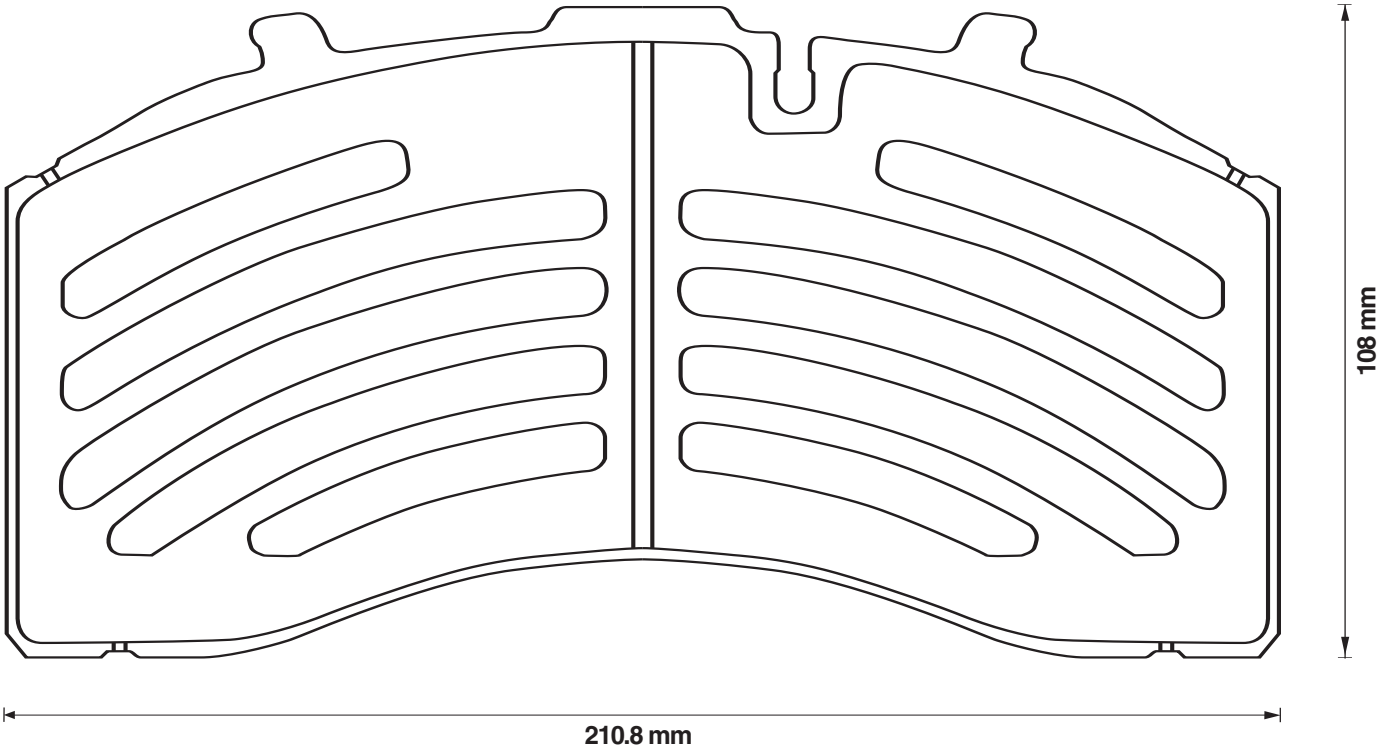

Knorr p 136
SAF Sauer p 376

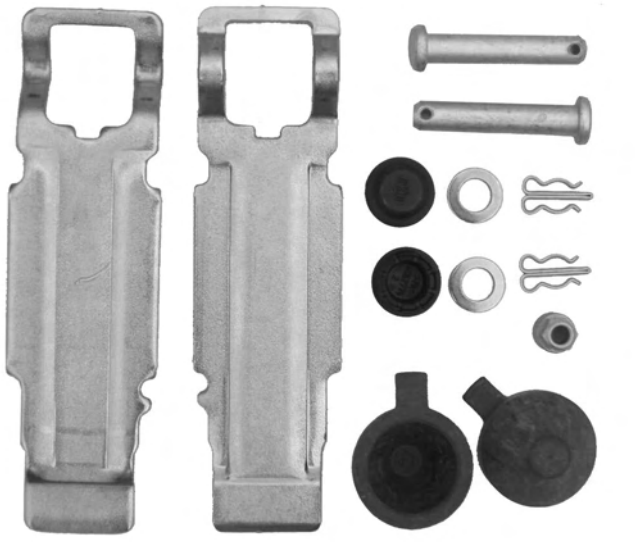

JURID by Honeywell

© JURID / All rights reserved 2005

	WVA	#		A	B
2915905399	29159	4		9	30

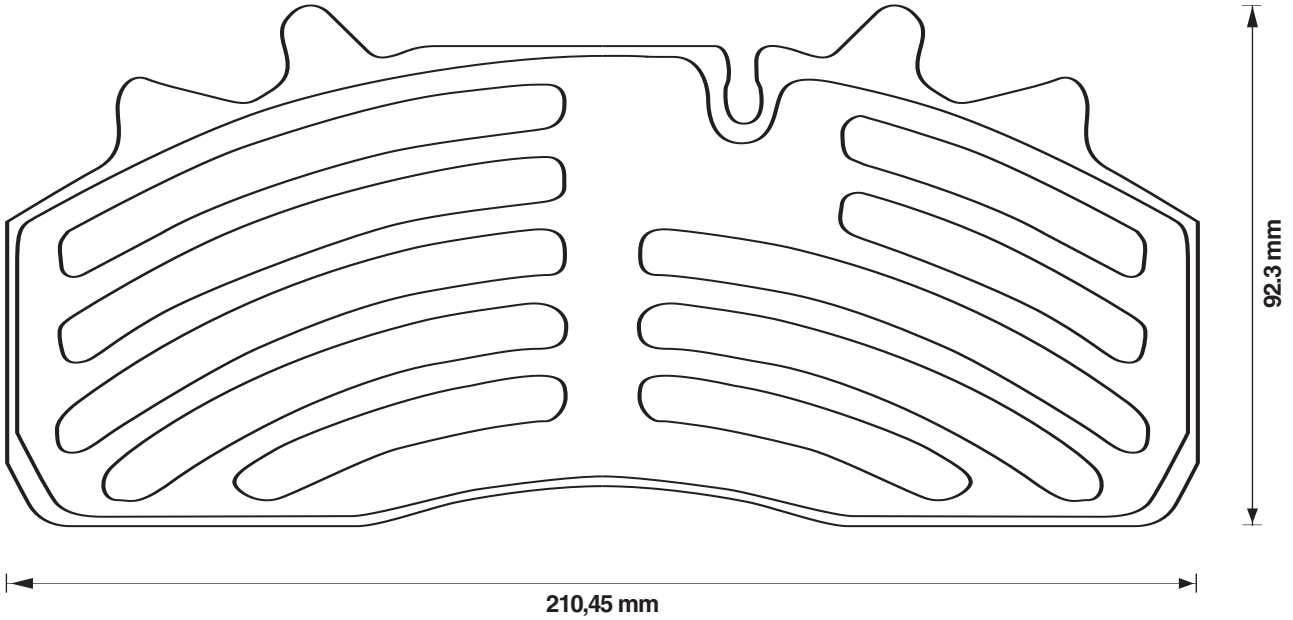

Daf		LF55	p 46
Dennis			p 52
Perrot (Wabco)			p 324
Renault Trucks (Renault VI)		Midlum	p 360
SAF Sauer			p 376
SMB			p 396
Wabco (Perrot)			p 438, 440

JURID / All rights reserved 2005

JURID by Honeywell

	WVA	#		A	B
2916009560	29160	4		5	20

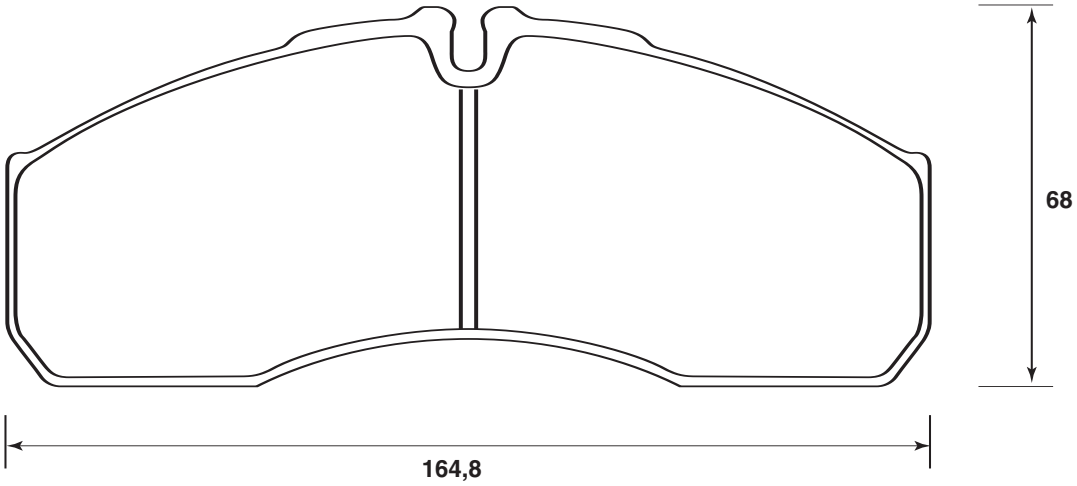

Renault Trucks (Renault VI)		Mascott	p 338



JURID / All rights reserved 2005

WVA #

A B

2916205399

29162 4 9 31

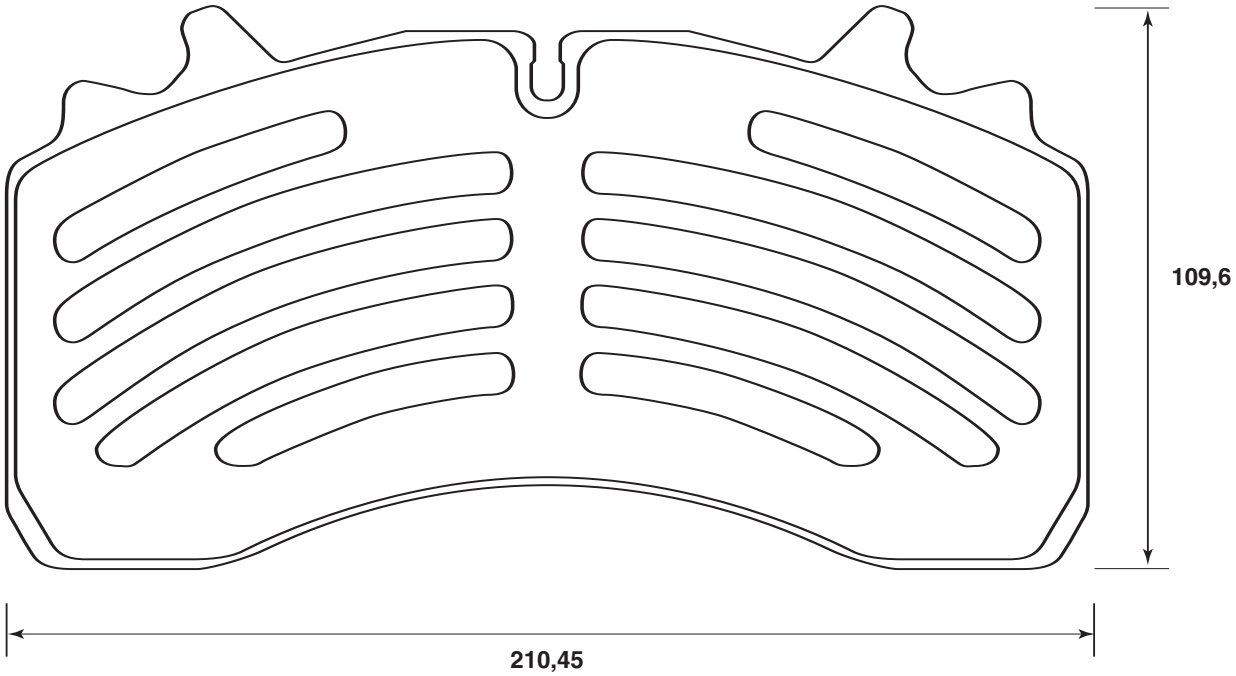

Perrot (Wabco)	p 326
SAF Sauer	p 376
Wabco (Perrot)	p 440

29165

29165

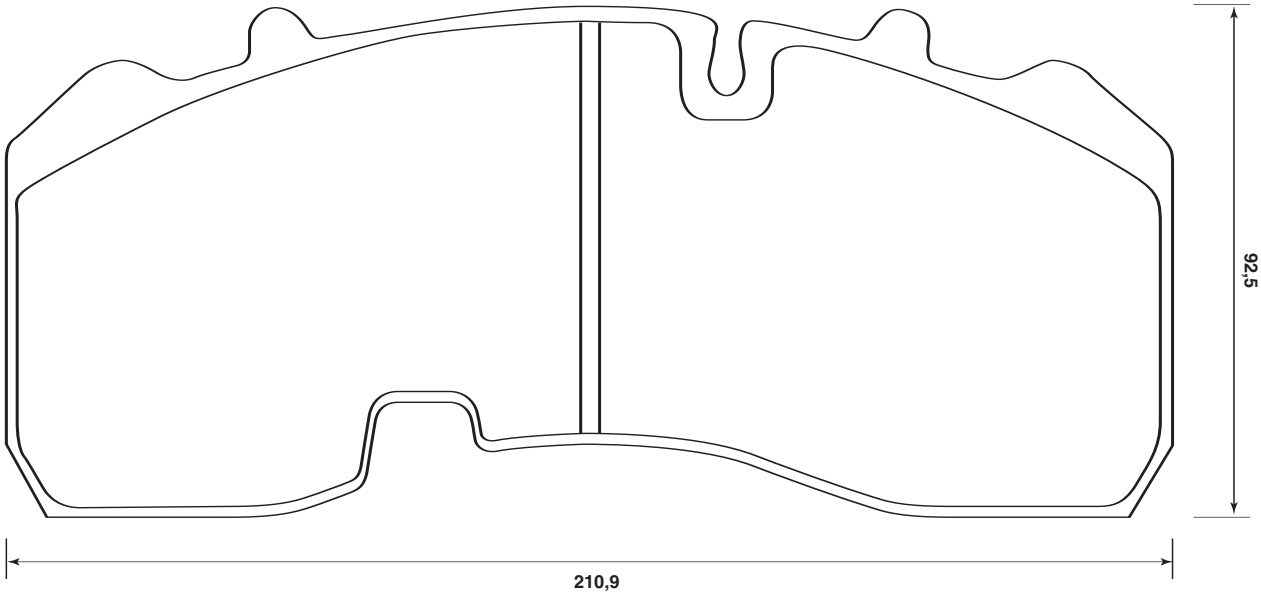

BPW	p 20
Knorr	p 136

© JURID / All rights reserved 2005

29167

29167

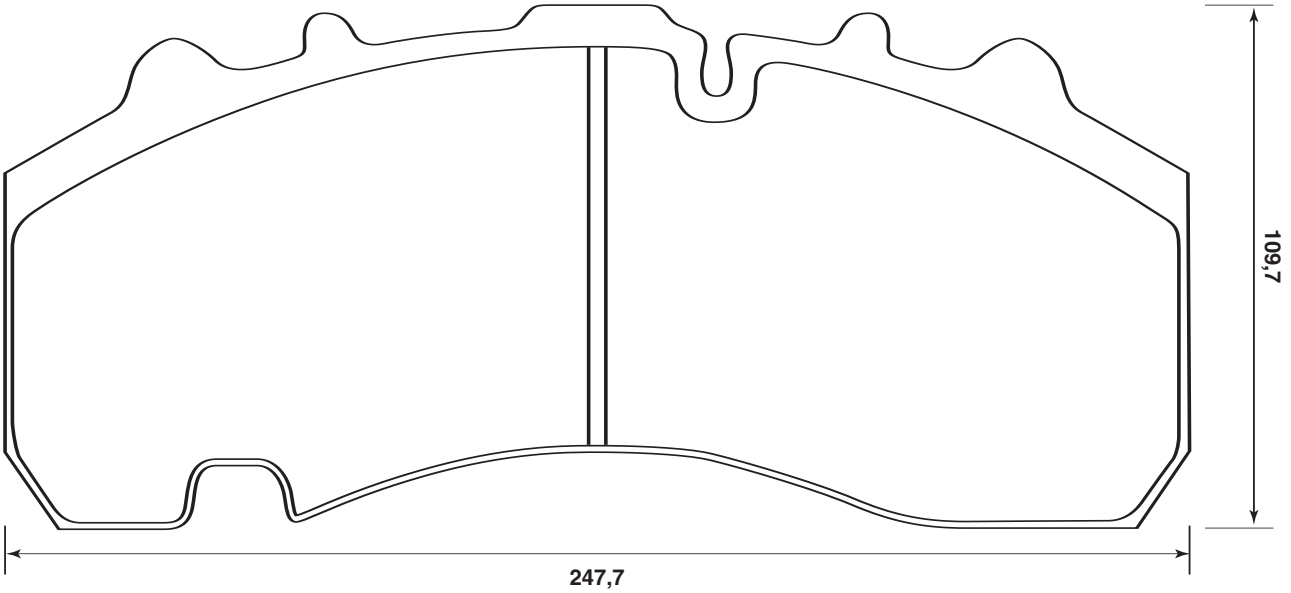

BPW p 20
Knorr p 136

29171

29171

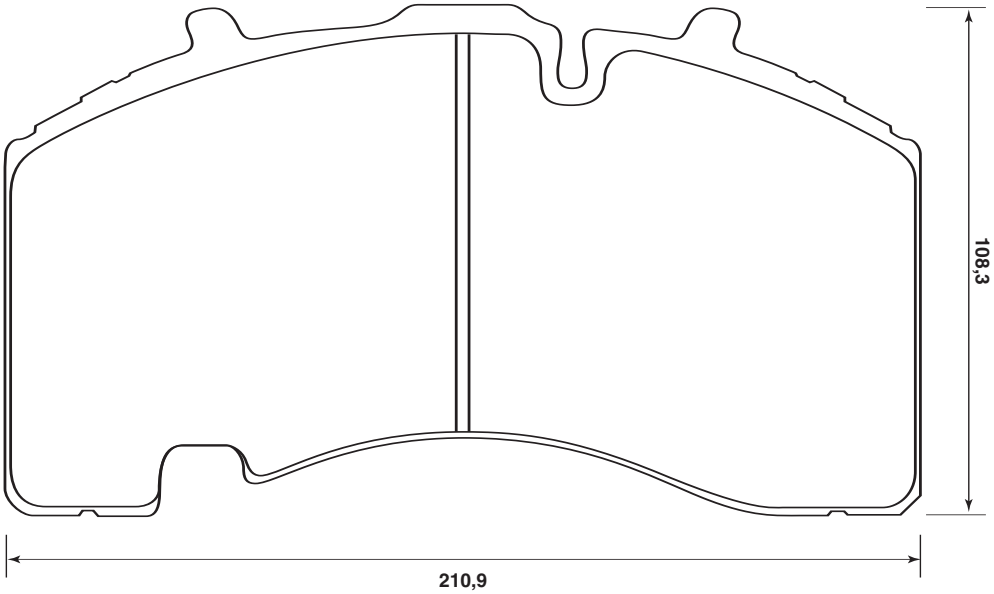

BPW p 20
Knorr p 136

JURID by Honeywell

© JURID / All rights reserved 2005

	WVA	#		A	B
2930209560	29302	4		6	21

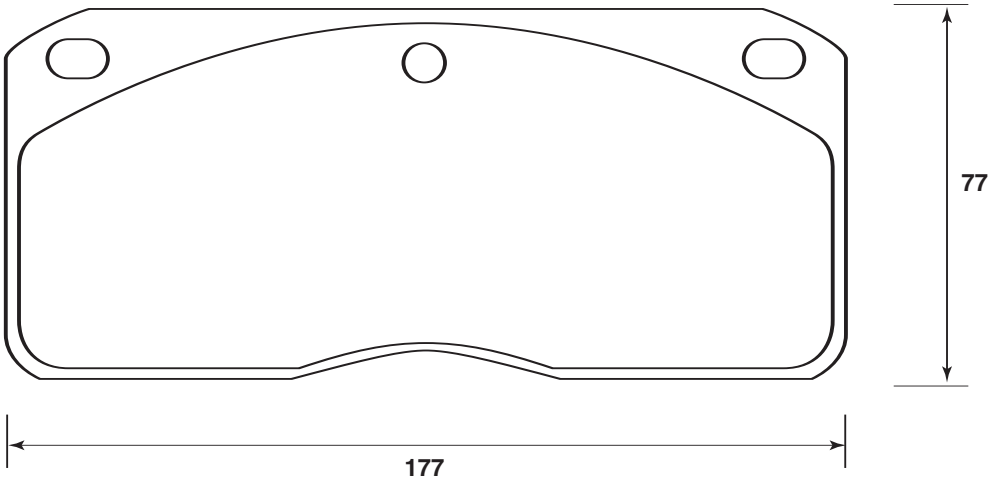

AWD		TL	p 8
Ford		Cargo	p 70
Metro Cammel Weymann			p 292
Volvo		FL4	p 430
		FL6	p 430

JURID / All rights reserved 2005

JURID by Honeywell

	WVA	#		A	B
2935709560	29357	4	587024J	5	20

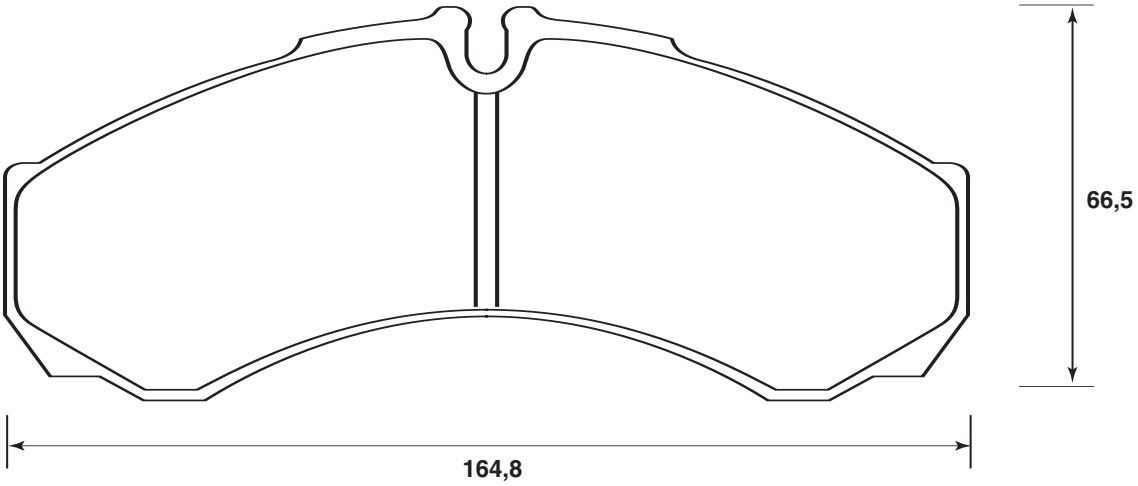

Iveco		Daily	p 86
		Daily II	p 88



JURID by Honeywell

© JURID / All rights reserved 2005



WVA # 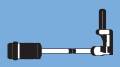

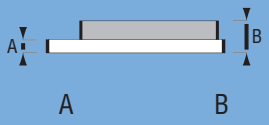

2937409560

29374 4 587002J, 587025J 6 22

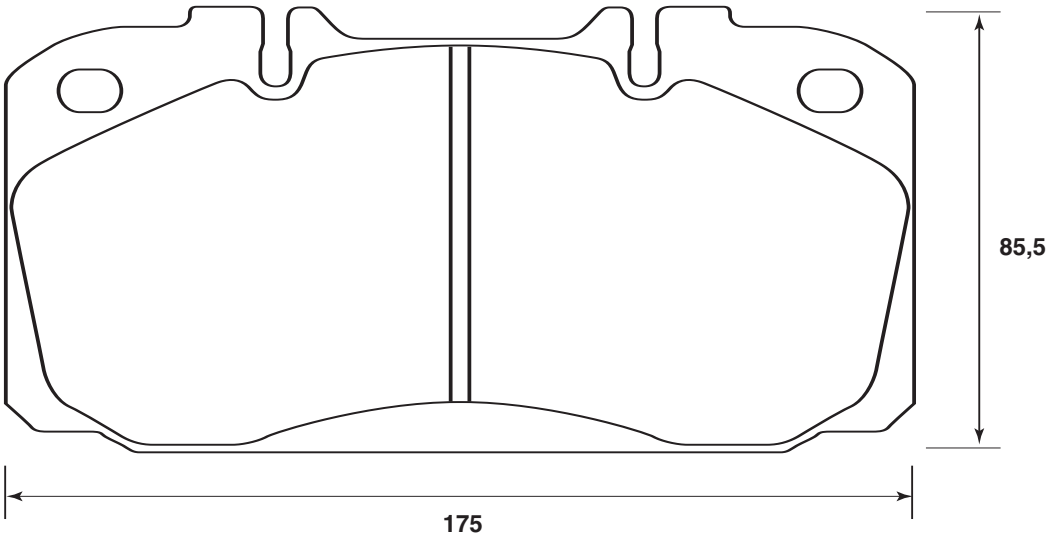

Iveco  Eurocargo p 88, 90

2949805440

29498 8 4 20

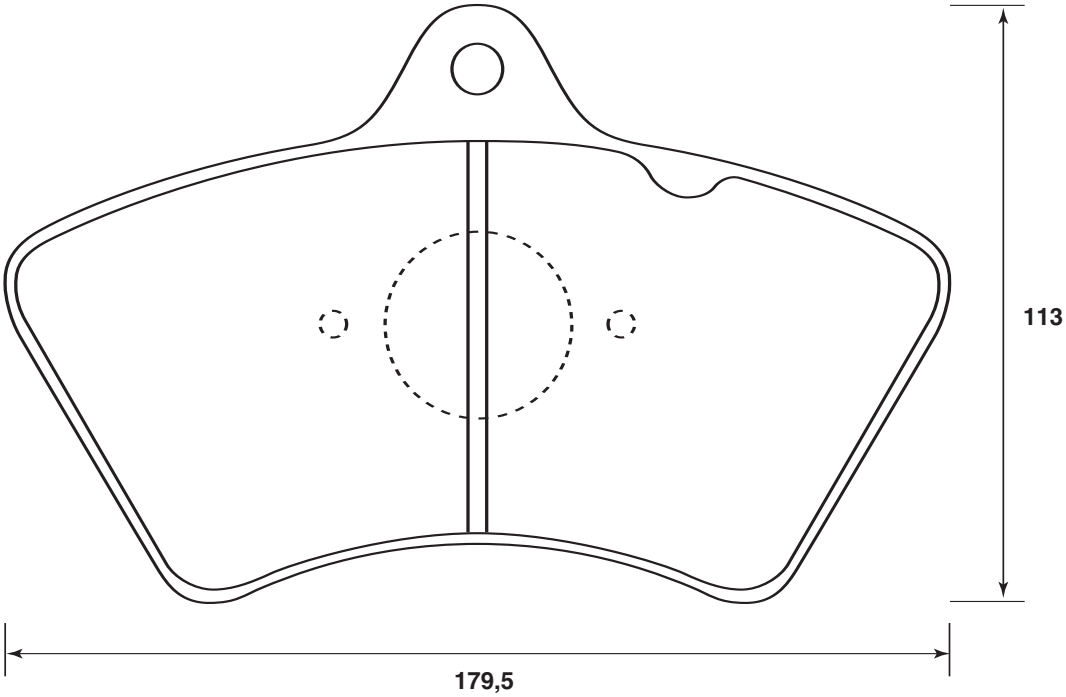

Kassbohrer / Setra  p 128, 130, 132

Knorr p 136

JURID / All rights reserved 2005

2949809560

29498 8 4 20

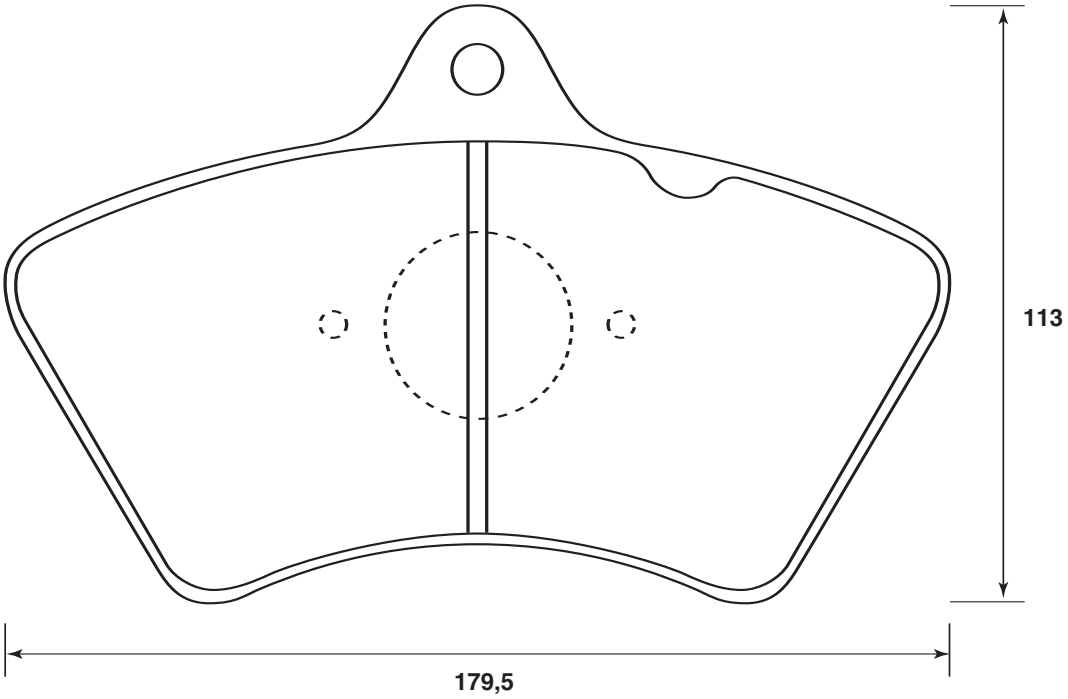

Kassbohrer / Setra p 128, 130, 132
Knorr p 136

2951009560

29510 4 8 29

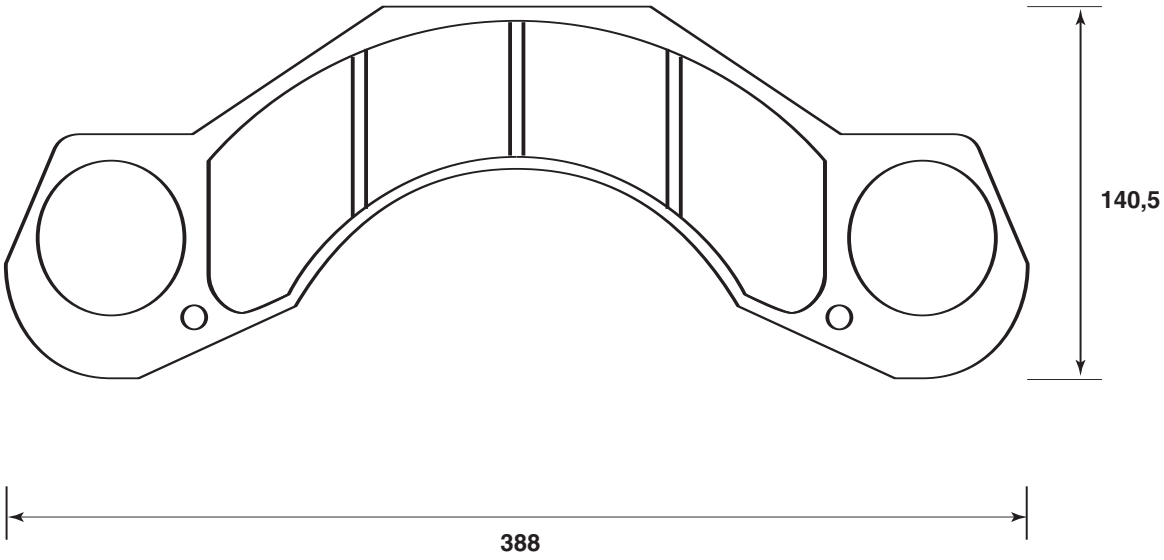

Kassbohrer / Setra p 130

JURID by Honeywell
© JURID / All rights reserved 2005

	WVA	#		A	B
2955405880	29554	4	587011J	4,5	15

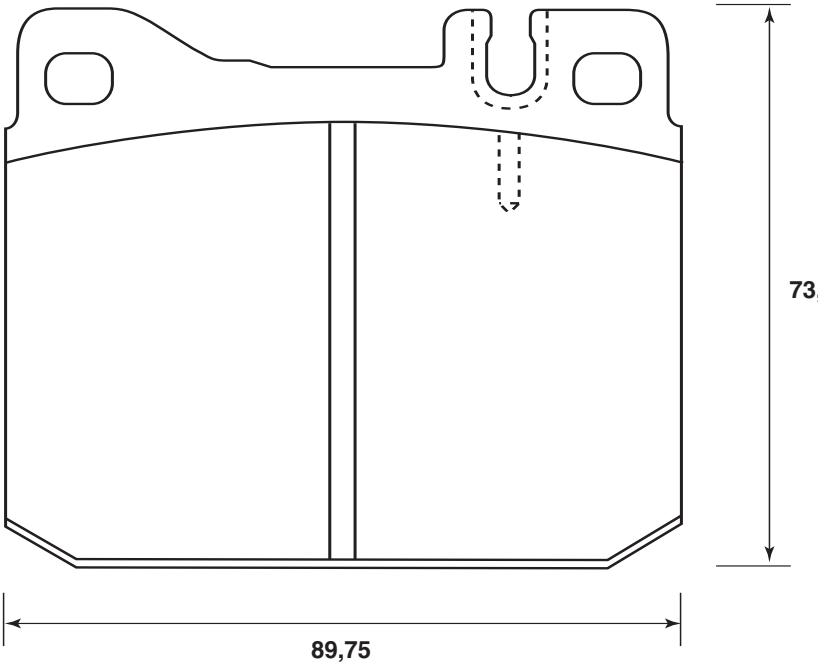

Mercedes Benz		MB Trac	p 274
		Unimog	p 274

	WVA	#		A	B
2955415880	29554	4	587011J	4,5	19

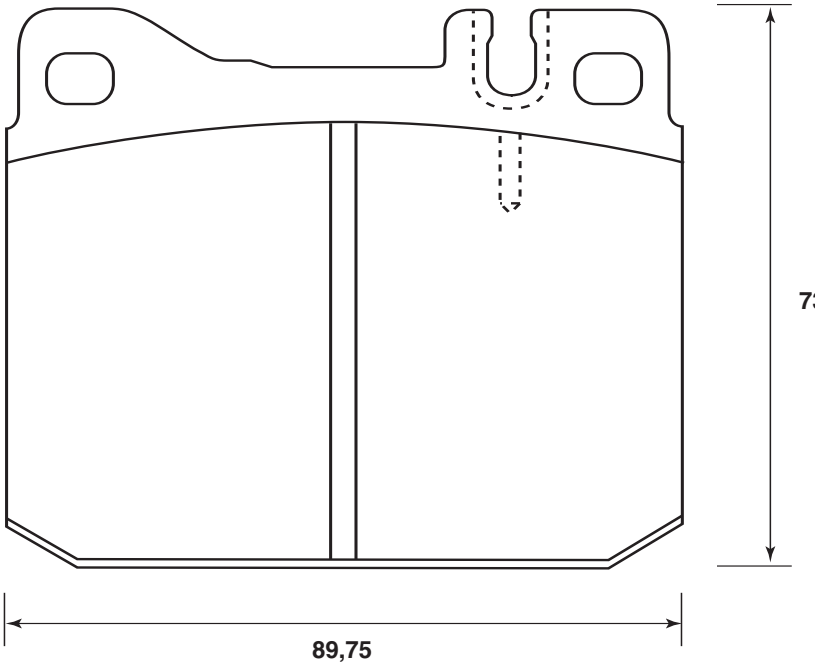

Mercedes Benz		Unimog	p 272
		MB Trac	p 274
		Unimog	p 274, 276

JURID / All rights reserved 2005

JURID by Honeywell

2958205440

29582 8 6 22

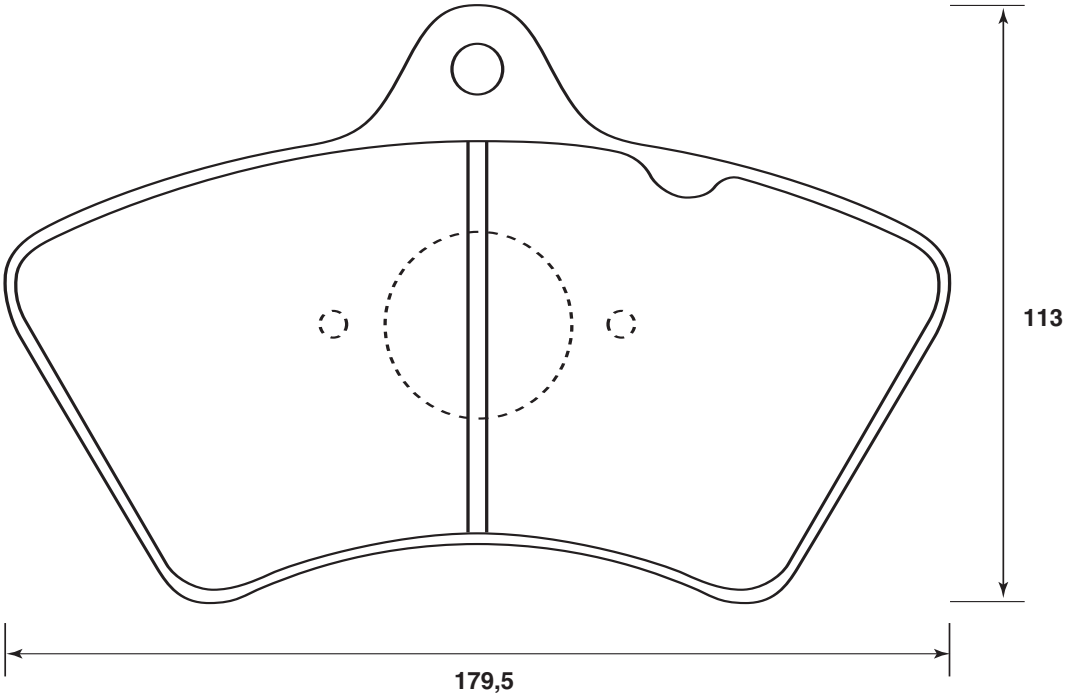

Kassbohrer / Setra
Knorr

p 128, 130, 132
p 136

2958209560

29582 8 6 22

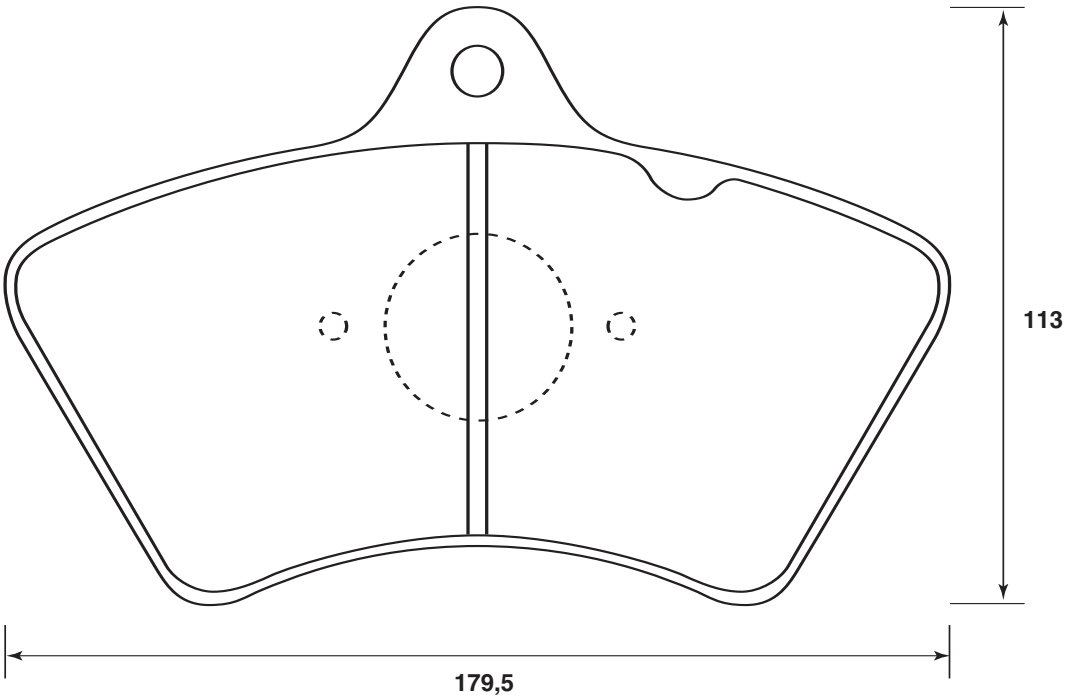

Kassbohrer / Setra
Knorr

p 128, 130, 132
p 136

JURID by Honeywell
© JURID / All rights reserved 2005

2968805440

29688 | 8 | 7 | 25

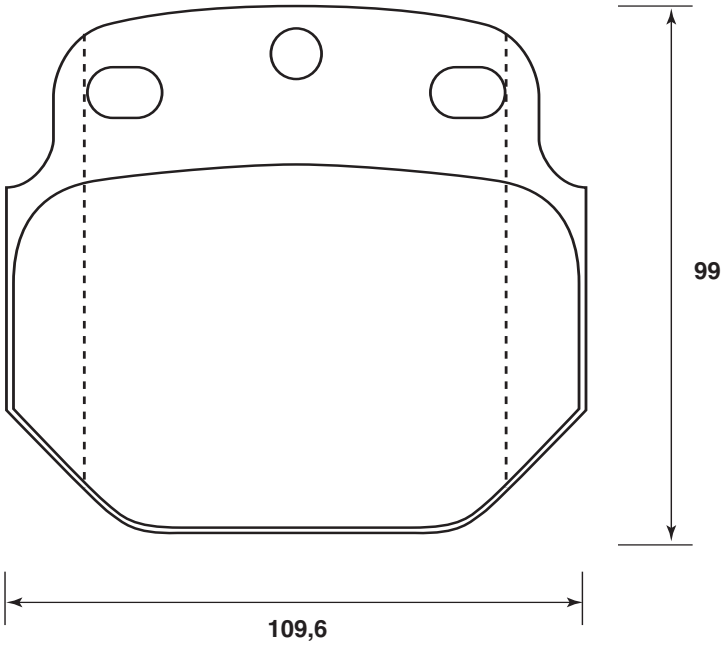

Iveco			p 108
Iveco (Magirus)			p 120
Kassbohrer / Setra			p 130
Knorr			p 136
Leyland / DAF			p 148
Neoplan		Jetliner	p 296, 298
		Metroliner	p 298

2974705440

29747 | 8 | 8 | 32

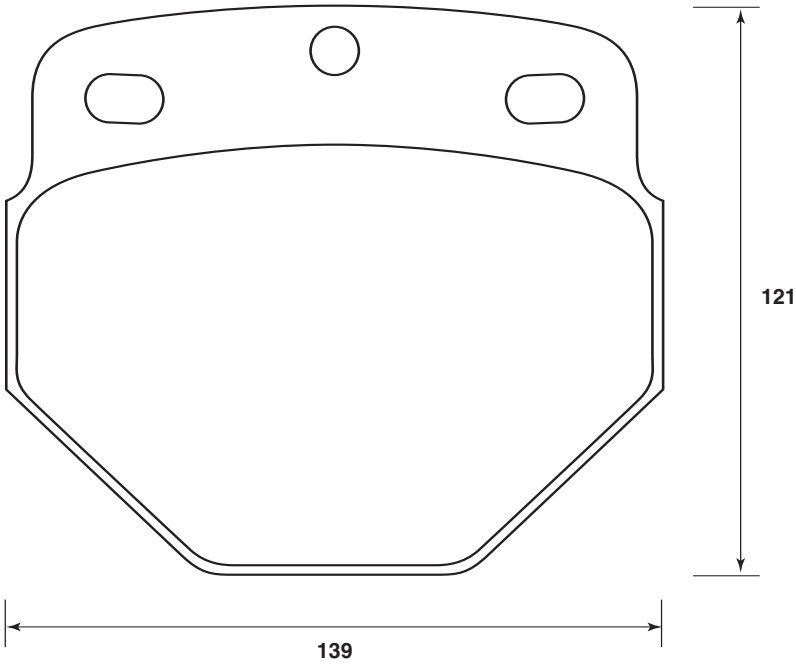

Bova		Futura	p 18
Daf		MB	p 48
		SB	p 49
Kassbohrer / Setra			p 130
Knorr			p 138
MAN			p 190
Neoplan		Jetliner, Metroliner, Niederflurbusse	p 298
Van Hool			p 410

JURID / All rights reserved 2005

JURID by Honeywell

2974709560

29747 | 8 | 8 | 32

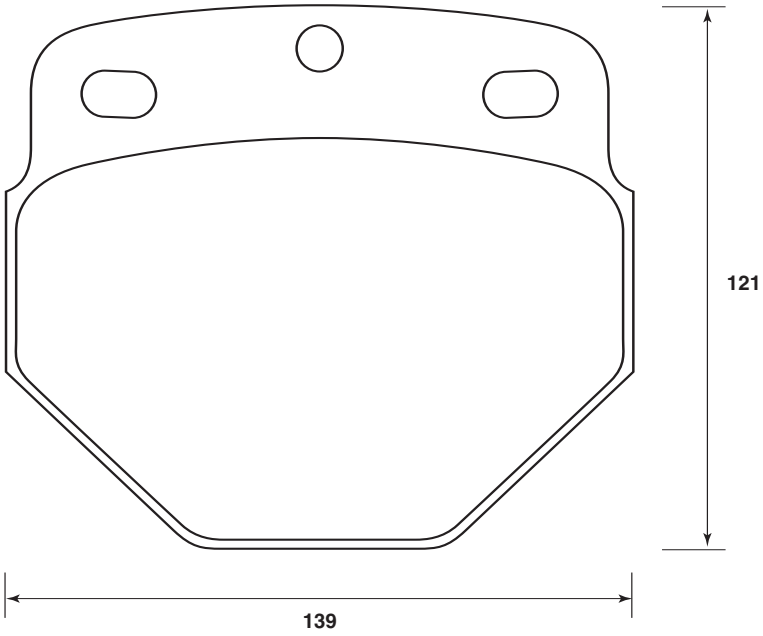

Bova		Futura	p 18
Daf		MB	p 48
		SB	p 49
Kassbohrer / Setra			p 130
Knorr			p 138
MAN			p 190
Neoplan		Jetliner, Metroliner, Niederflurbusse	p 298
Van Hool			p 410

2978205440

29782 | 8 | 9,5 | 27,5

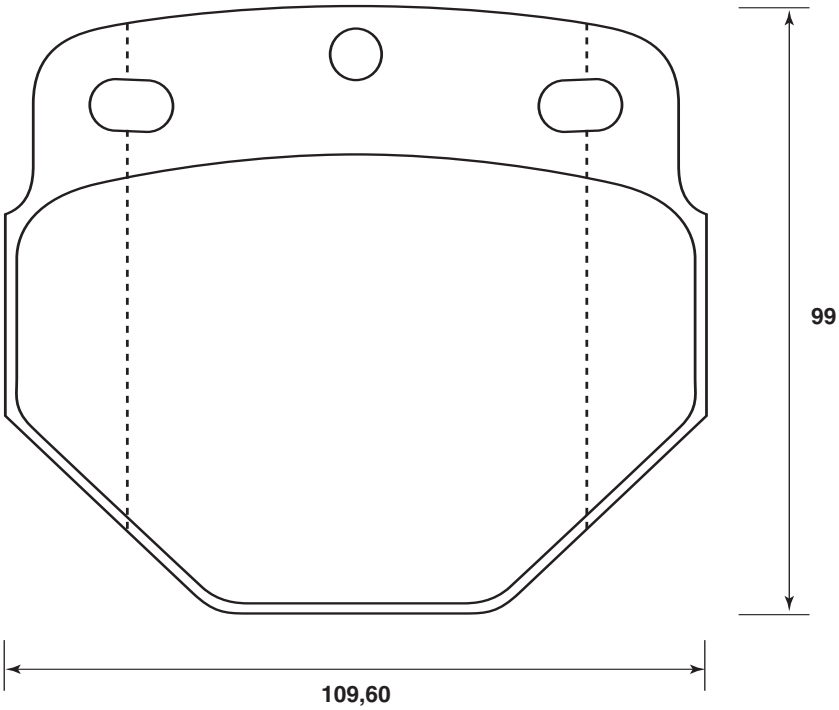

Iveco			p 108
Iveco (Magirus)			p 120
Kassbohrer / Setra			p 130
Knorr			p 138
Leyland / DAF			p 148
Neoplan		Jetliner	p 298

JURID by Honeywell

© JURID / All rights reserved 2005

	WVA	#		A	B

2983505440

29835	4	587004J	6	22

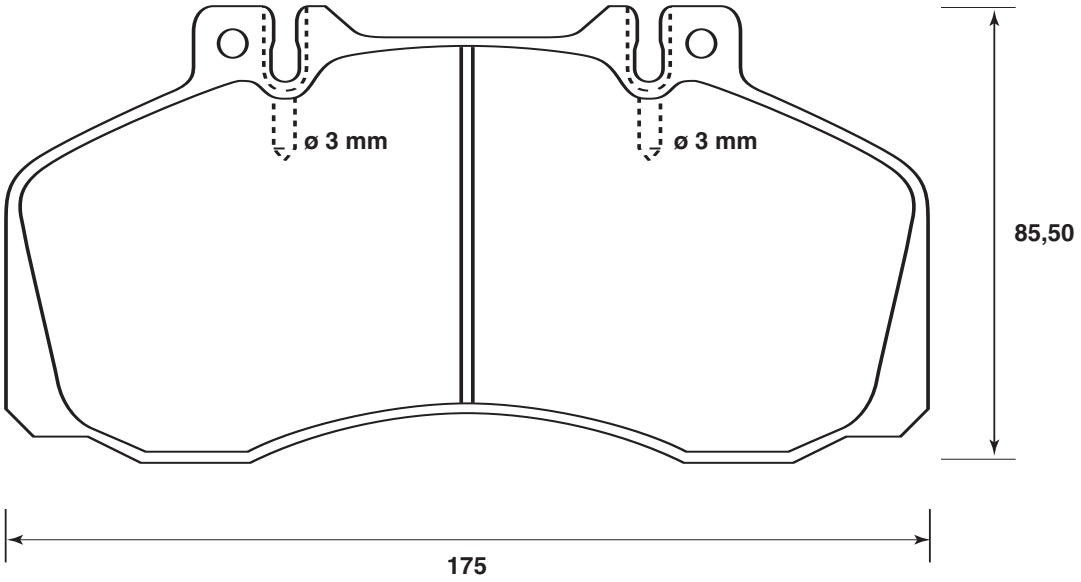

Mercedes Benz	Vario Plus	p 200
	T 2	p 272
Mercedes Benz / Evobus	O409	p 284
	O609	p 286
	O611, O614, O812, O814	p 286
Optare		p 312

2983509560

29835	4	587004J	6	22

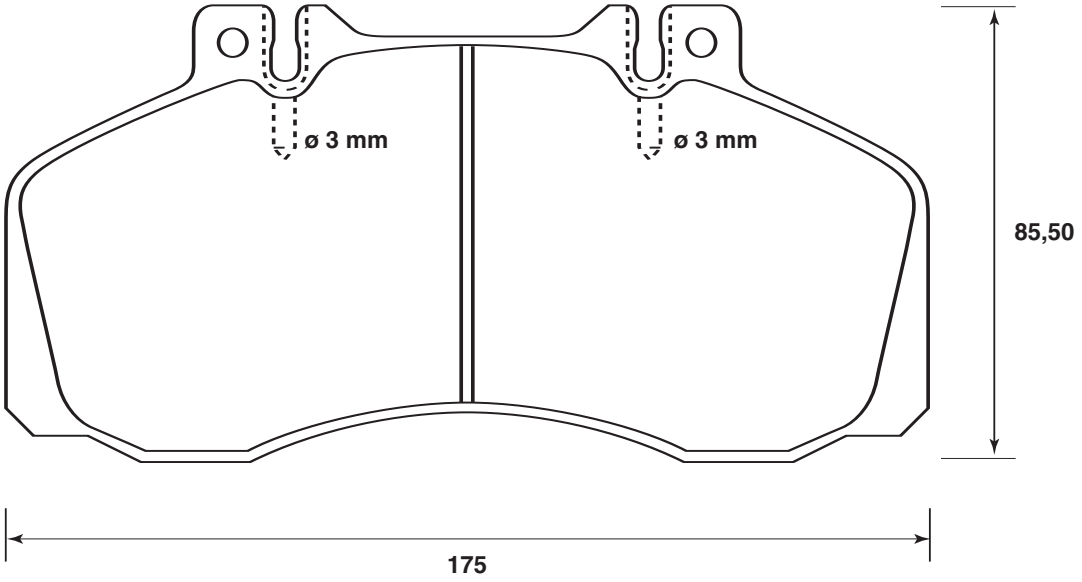

Mercedes Benz	Vario Plus	p 200
	T 2	p 272
Mercedes Benz / Evobus	O409	p 284
	O609	p 286
	O611, O614, O812, O814	p 286
Optare		p 312

© JURID / All rights reserved 2005



WVA #

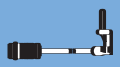

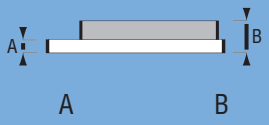

2996905440

29969	8		10	34,5

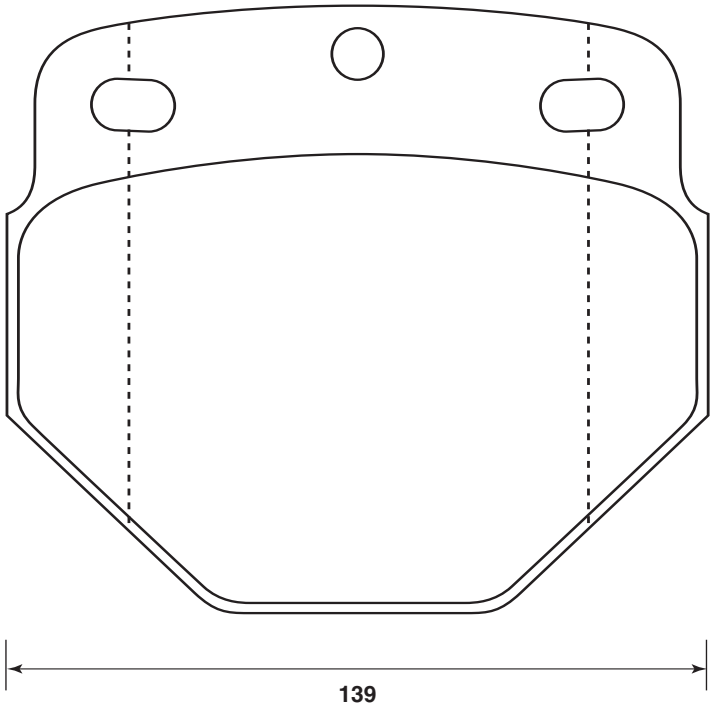

Bova		Futura	p 18
Daf		MB	p 48
		SB	p 49
Kassbohrer / Setra			p 130
Knorr			p 138
Neoplan		Jetliner	p 298
Van Hool			p 410

JURID by Honeywell

© JURID / All rights reserved 2005

	WVA	#		A	B
2998404611	29984	4	2	6	17

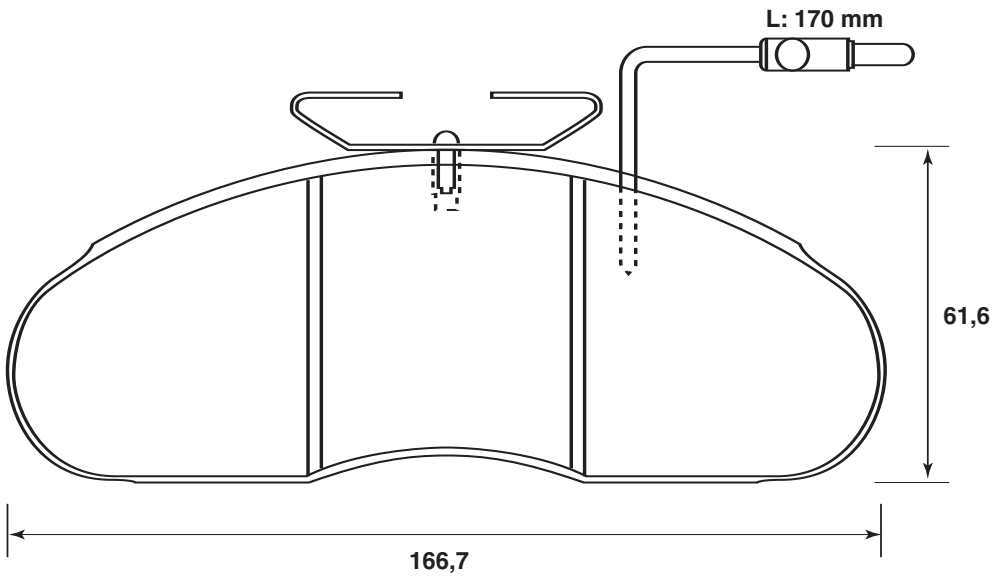

Mercedes Benz		MB	p 196
Renault Trucks (Renault VI)		Messenger / B	p 340



JURID / All rights reserved 2005

	WVA	#		A	B
2998404612	29984	4	2	6	17

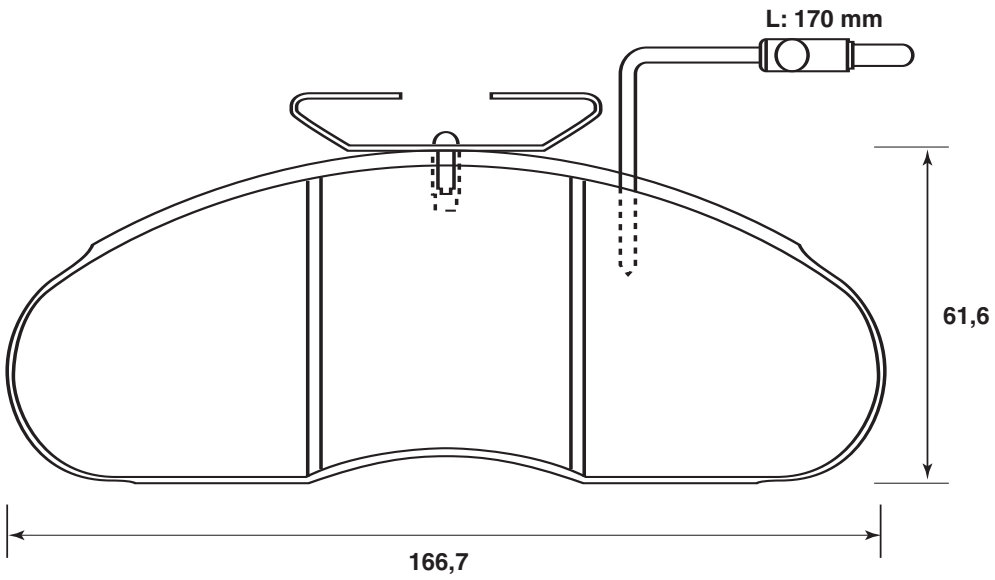

Nissan (Ebro)		F275	p 304
		F350	p 304
		L35	p 306
		L45	p 306
		Trade	p 306



JURID / All rights reserved 2005

	WVA	#		A	B

5214300010

29626	1		8	26

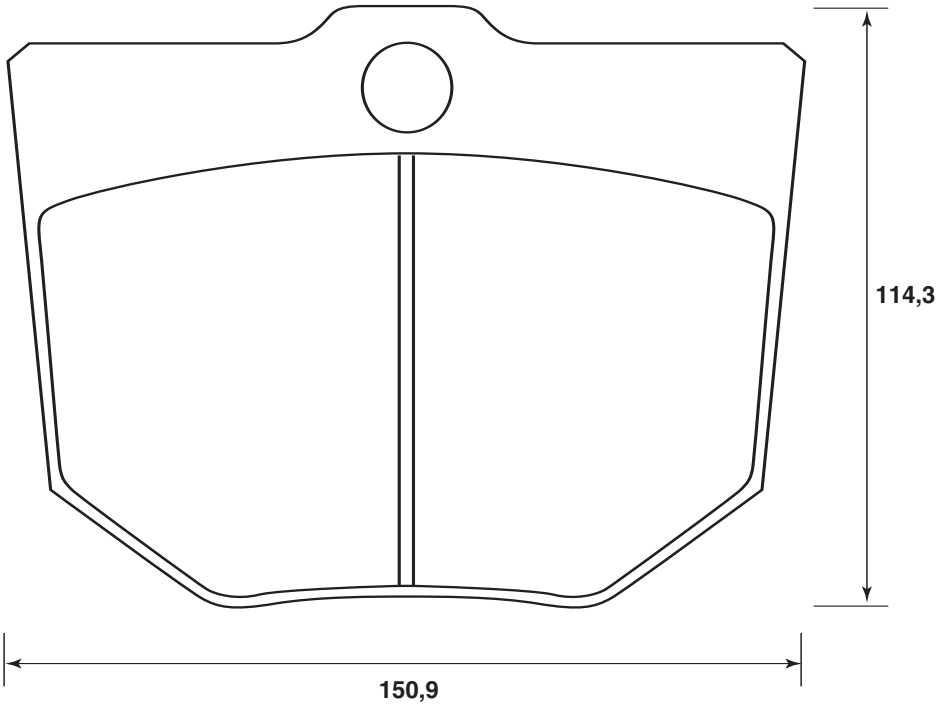

Perlini		100	p 319

571217J

20366	4	2	15

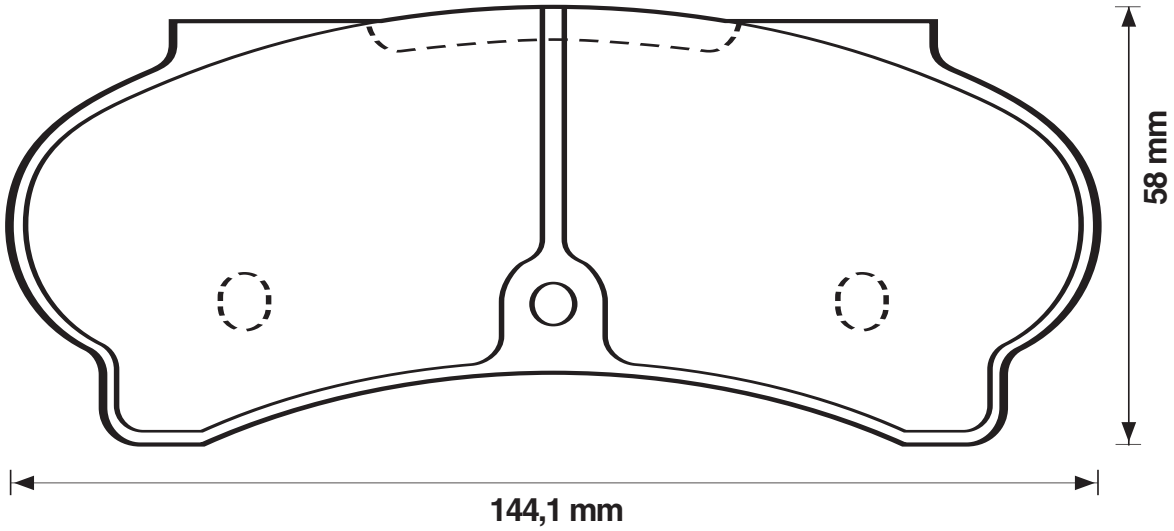

Peugeot		J7	p 328
		J9	p 328

2 4 2

© JURID / All rights reserved 2005

571233J

20364 4 15

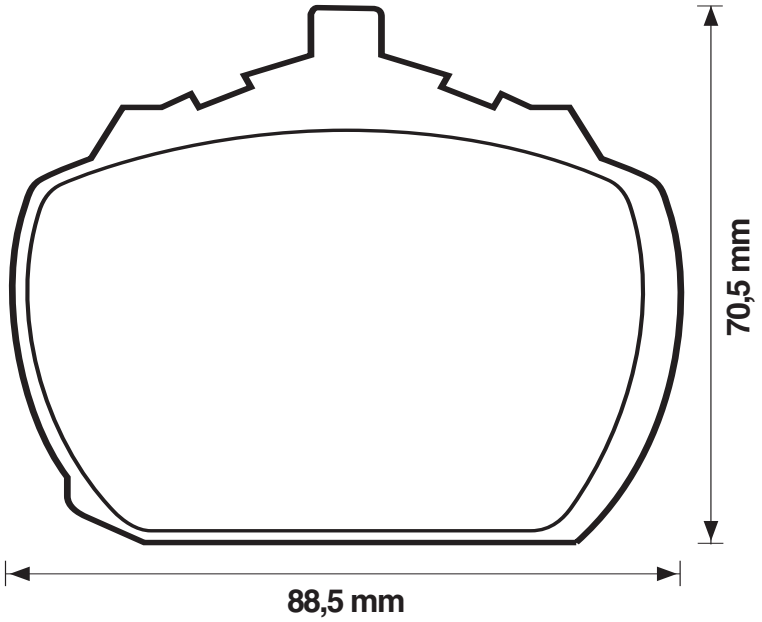

Bedford		CF 2	p 10
Daf		200	p 30
Ford		Transit	p 68
Leyland / DAF		Pilot	p 142
		Sherpa	p 142

4

571236J

20011 4 18,7

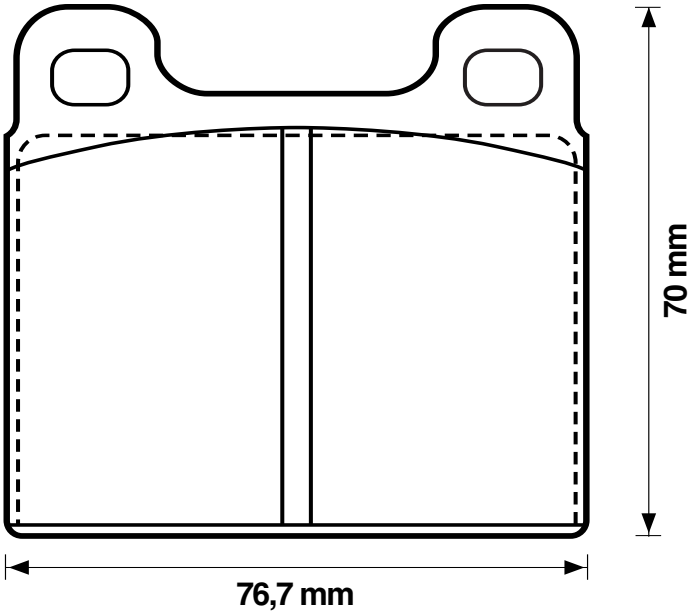

Volkswagen		Transporter/Bus	p 416, 418

JURID / All rights reserved 2005

	WVA	#		A	B
571246J	20570	4			18,5

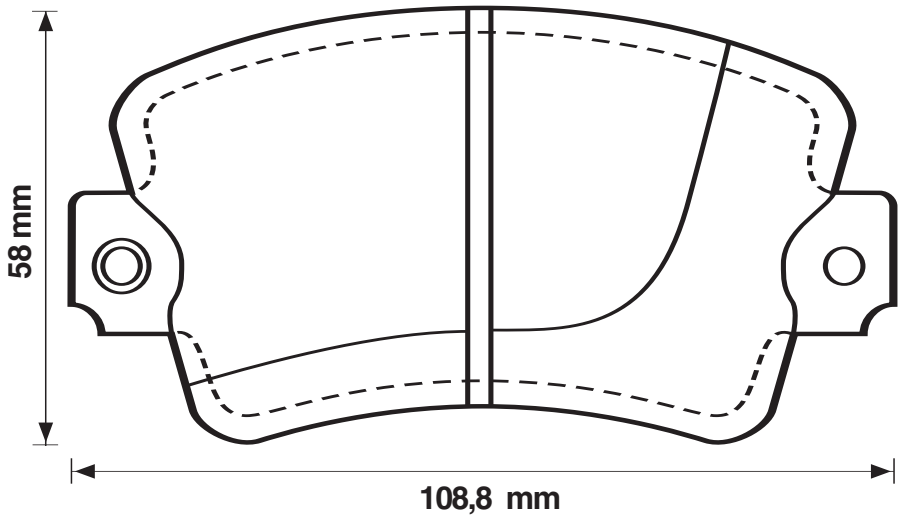

Renault		Trafic	p 332

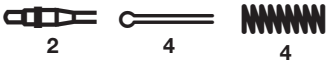

571250J	20359	4			17,8

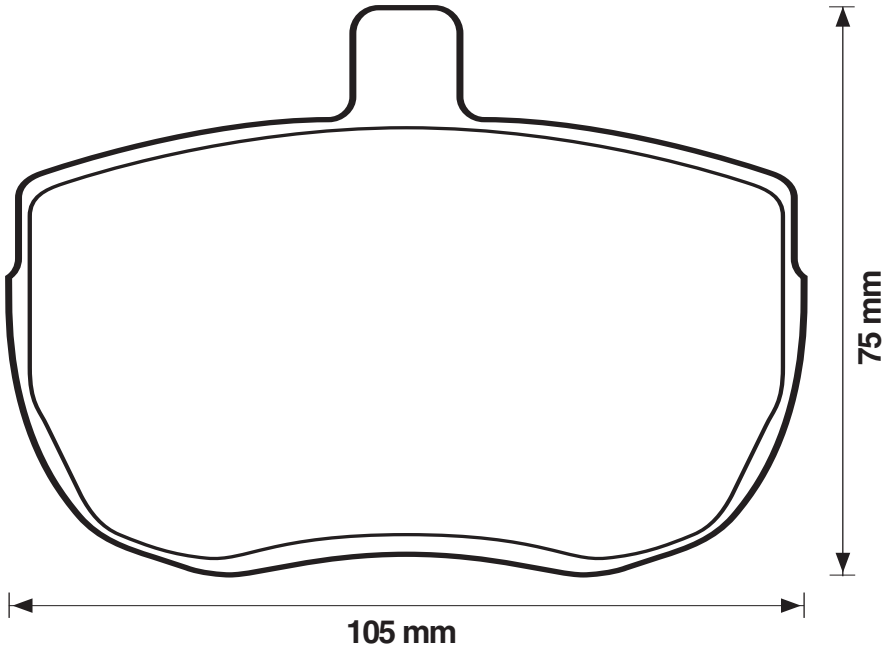

Daf		200	p 30
		400	p 30
Ford		Transit	p 66
Iveco		Daily	p 84
Iveco (OM)		Grinta	p 122
Leyland / DAF		Convoy, Pilot, Sherpa	p 142

JURID / All rights reserved 2005

571255J

20280 4 18,5

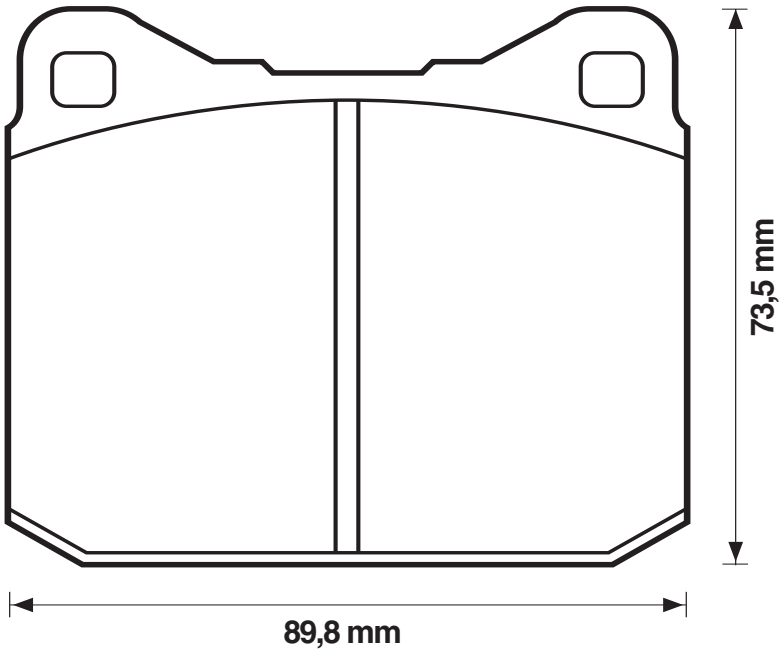

MAN		G	p 151
Optare			p 312
Volkswagen		LT	p 414

571272J

20784 4 581304J 17,8

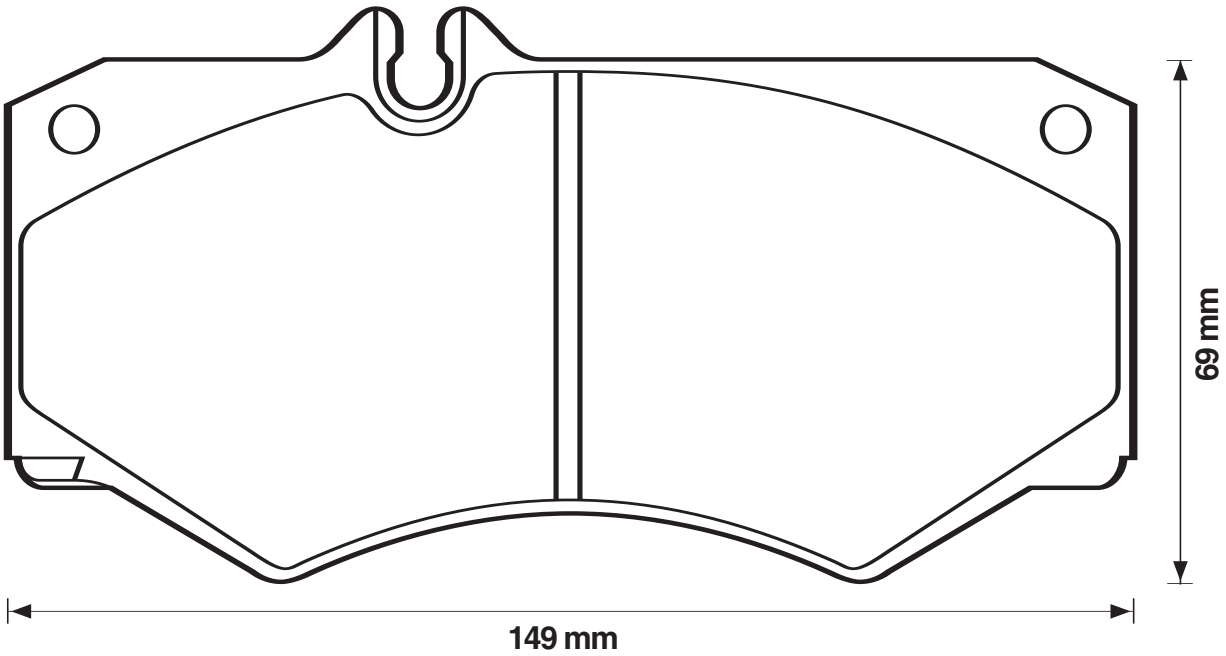

Mercedes Benz		T 1	p 198
Mercedes Benz / Evobus		minibus	p 290
Volkswagen		LT	p 414

JURID by Honeywell

© JURID / All rights reserved 2005

	WVA	#		A	B
571304J	20787	4	2		19,2

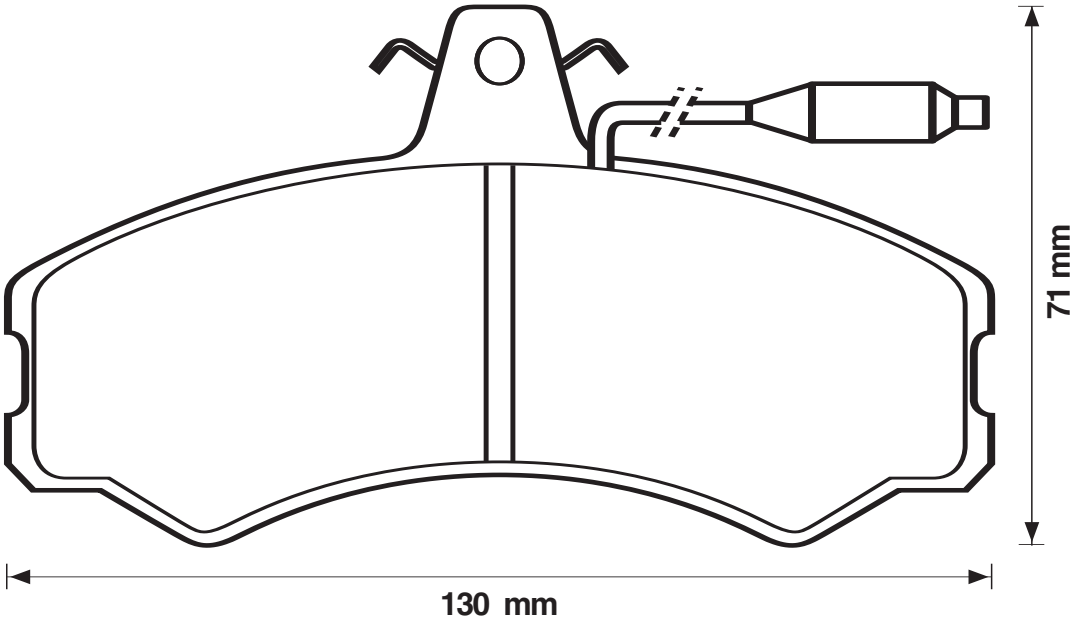

Citroen		C 25	p 24
Iveco		Talento	p 88
Peugeot		J5	p 328

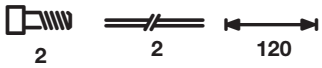

571306J	20927	4	2		18,5

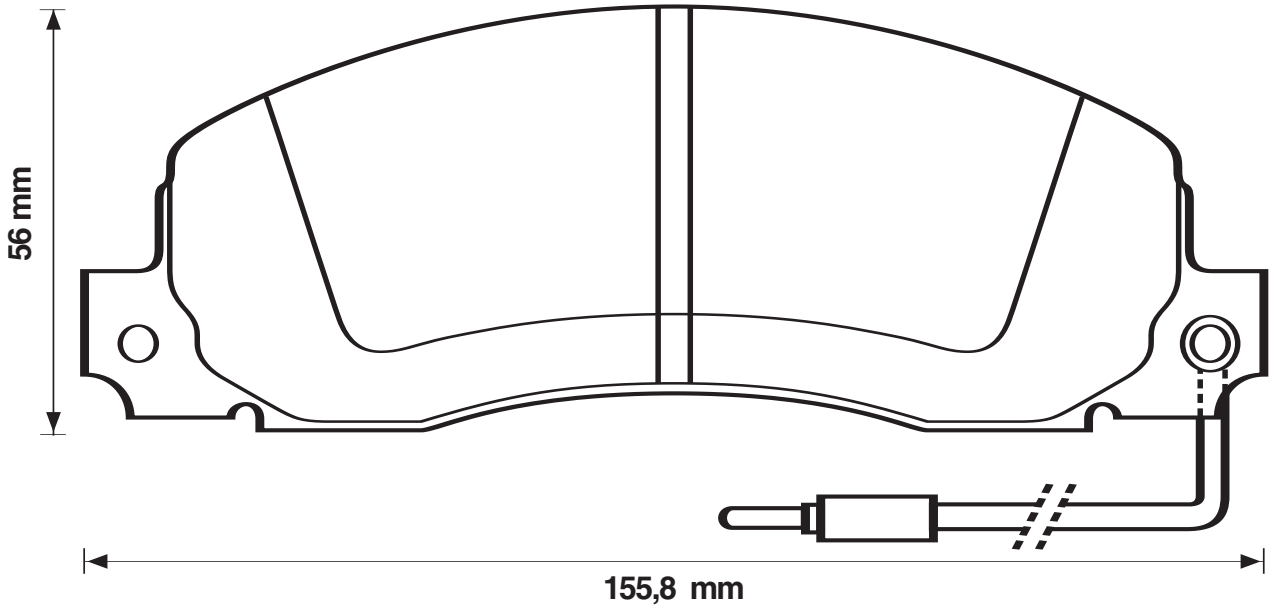

Renault		Trafic	p 332



JURID / All rights reserved 2005

JURID by Honeywell

	WVA	#		A	B
571321J	20380	4	2		15,5

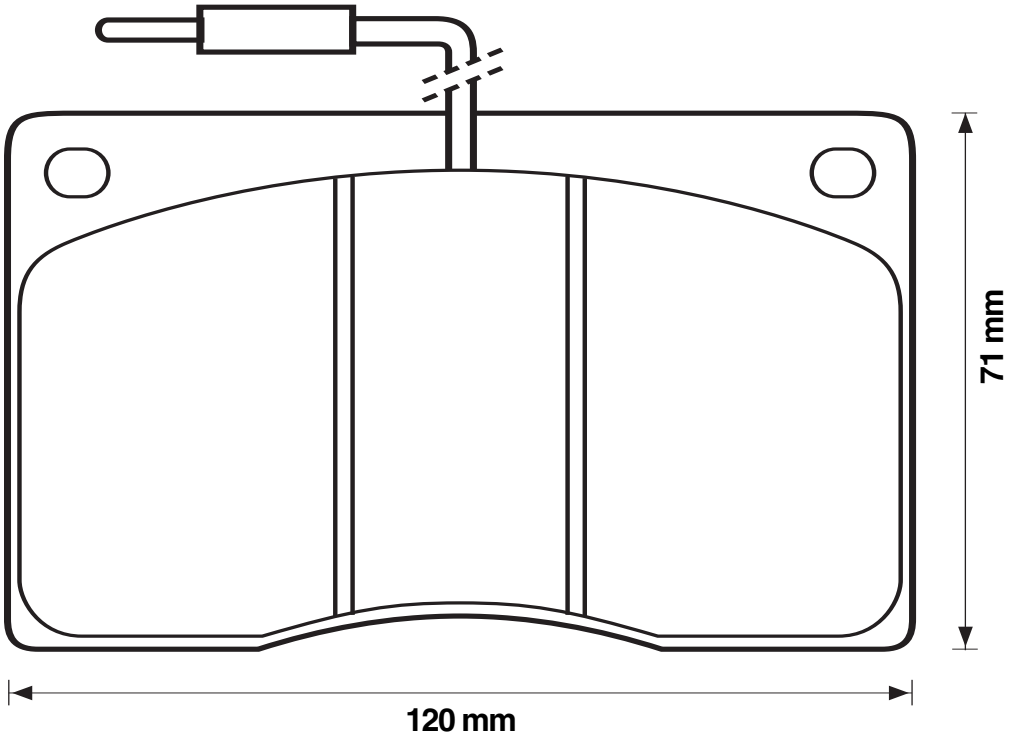

Renault		Master	p 330

2 80

	WVA	#		A	B
571325J	21049	4	4		18,3

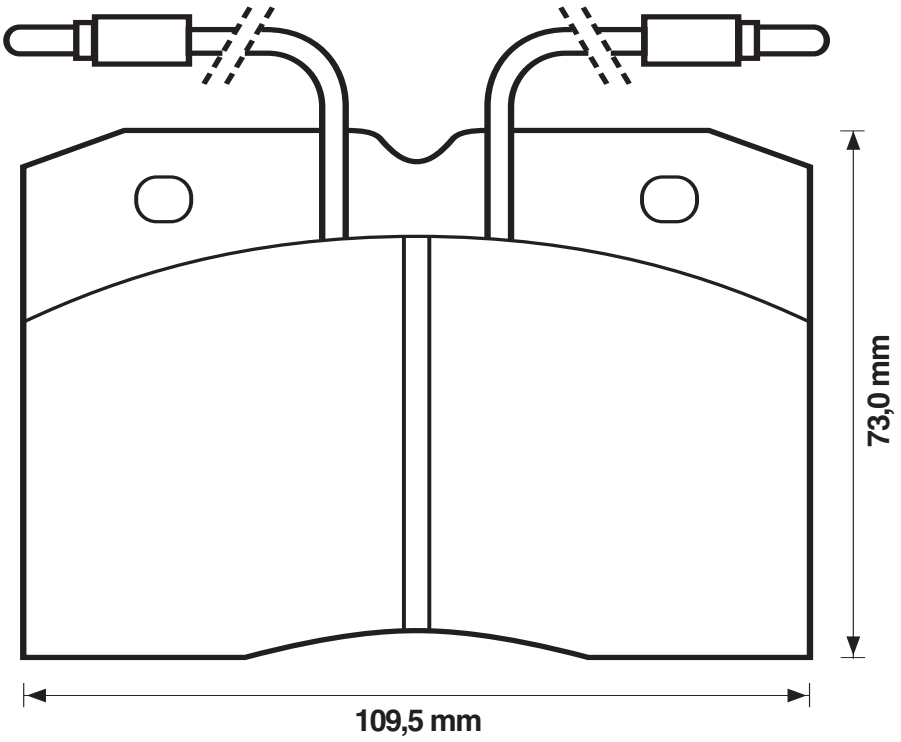

Iveco		Daily	p 84
Iveco (Fiat)		Ducato	p 112

2/2 120/1

JURID by Honeywell

JURID / All rights reserved 2005

	WVA	#		A	B
571336J	21141	4			18

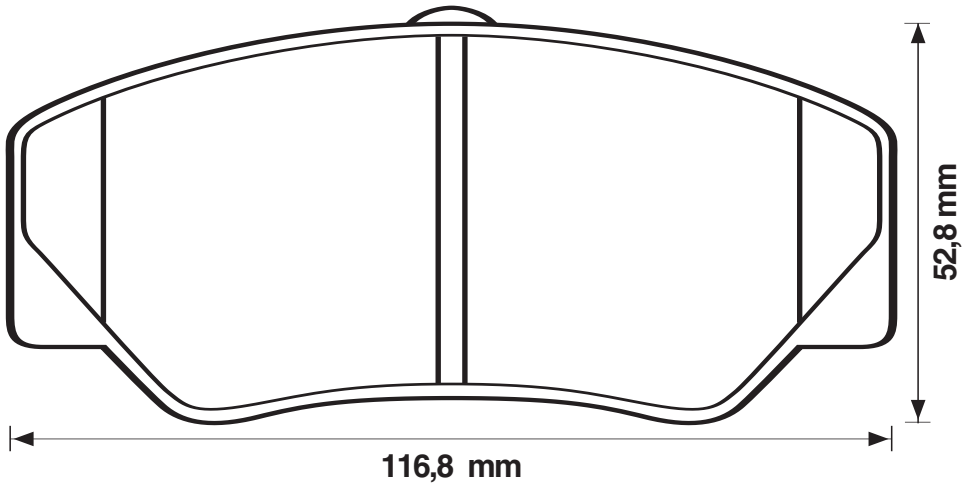

Ford		Transit	p 68

	WVA	#		A	B
571340J	20366	4	2		18

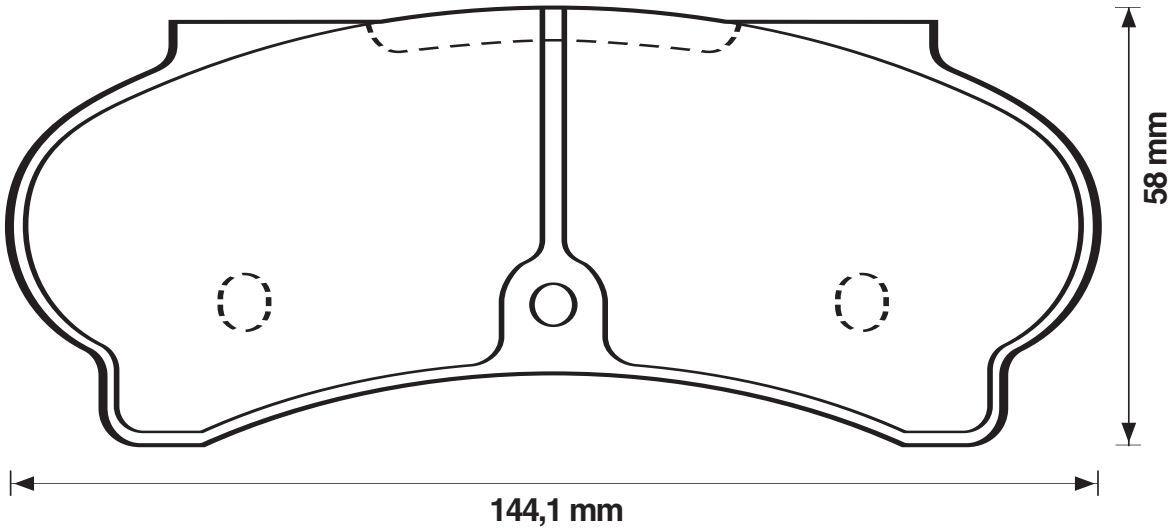

Peugeot		J9	p 328



JURID / All rights reserved 2005

JURID by Honeywell

571368J

20706 4 17

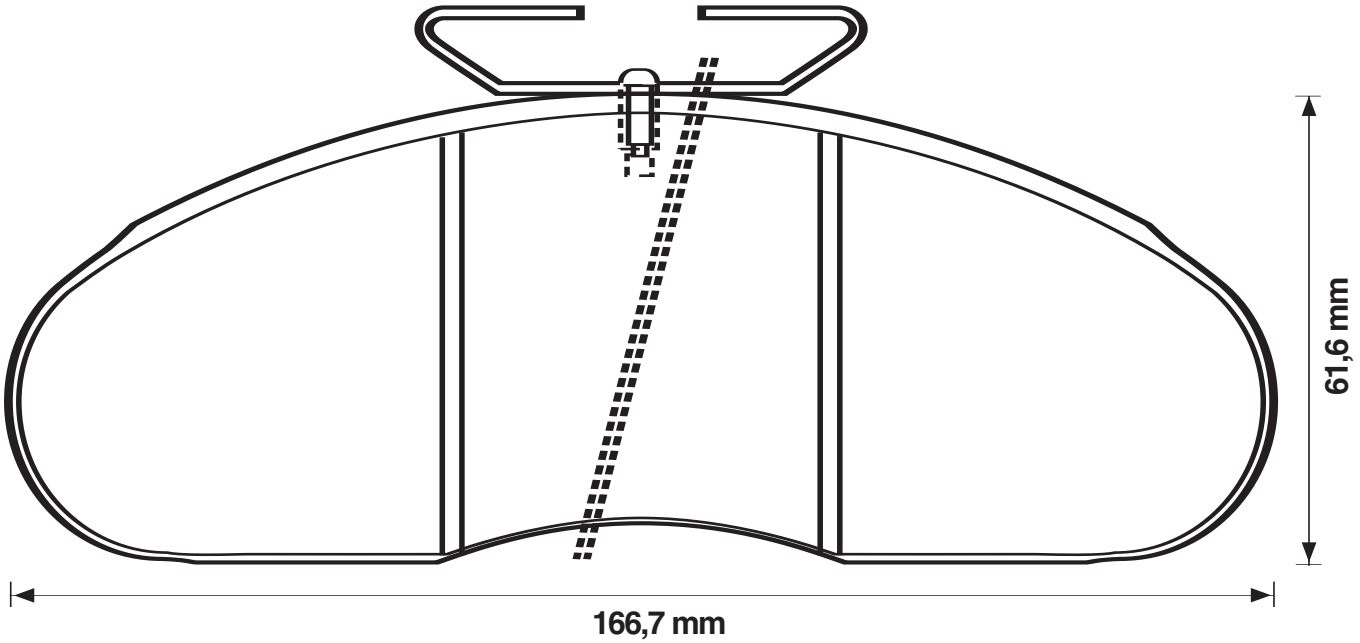

Mercedes Benz		MB	p 196
Renault		Trafic	p 332
Renault Trucks (Renault VI)		Messenger / B	p 340
Sava			p 380

4

571372J

20392 4 587011J 15

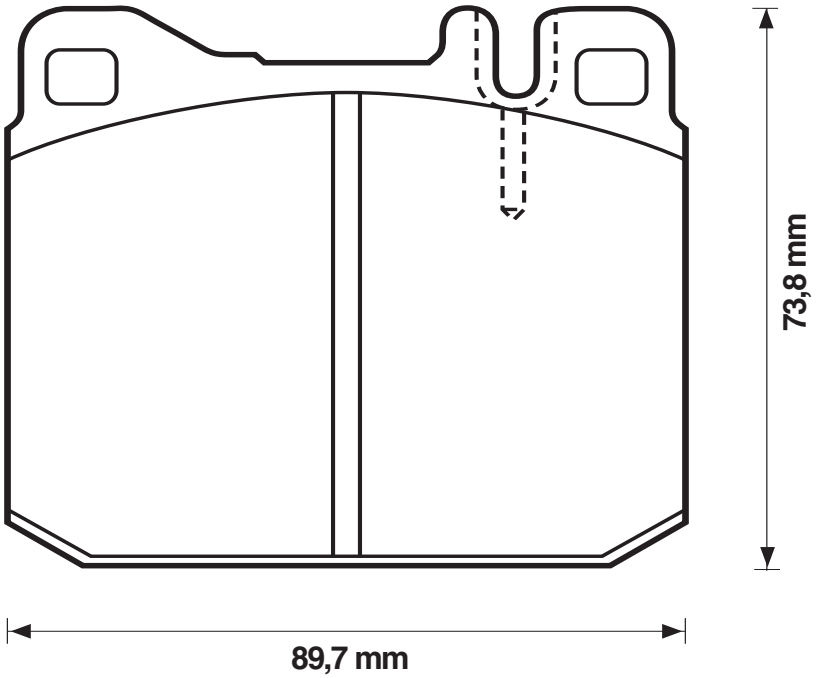

Mercedes Benz		MB Trac	p 274

JURID by Honeywell
© JURID / All rights reserved 2005

571379J

20759 | 4 | 4 | 18

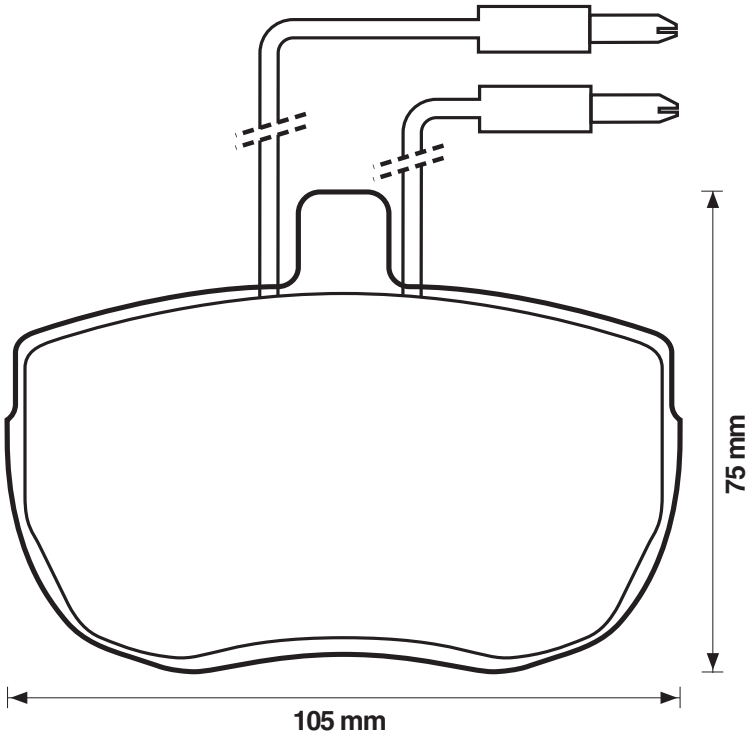

Ford		Transit	p 66, 68
Iveco		Daily	p 84
Unic (Unic F.F.S.A)		Izoard	p 406

2/2 150/2

571380J

20979 | 4 | 19,7

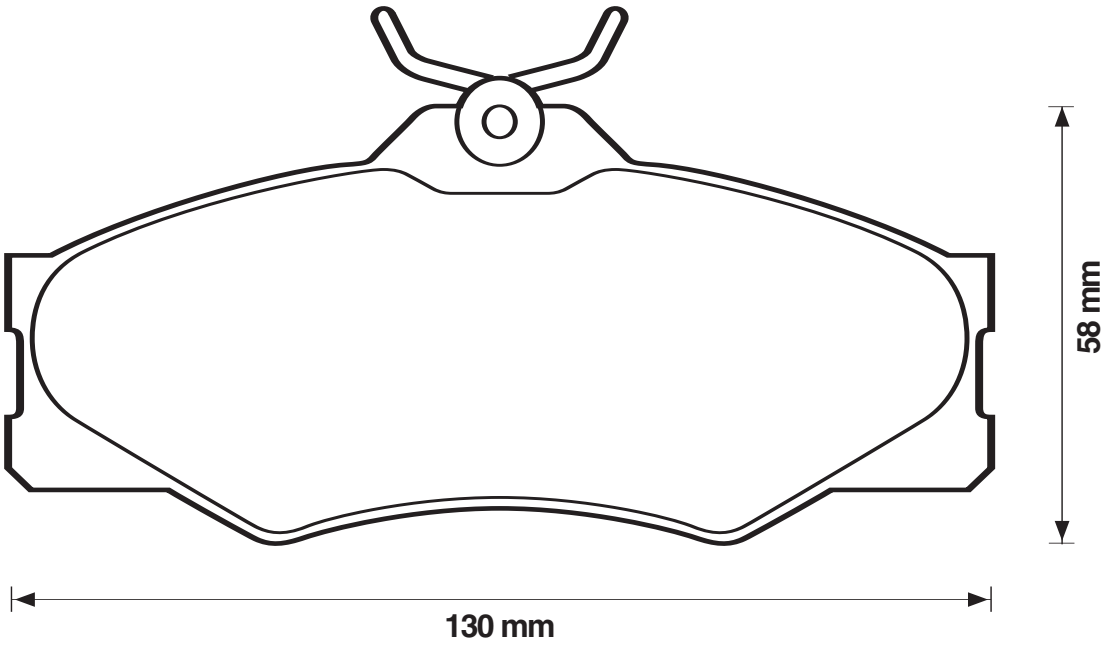

Volkswagen		Transporter/Bus	p 416

2

JURID / All rights reserved 2005

571393J

21206 | 4 | 2 | 19,7

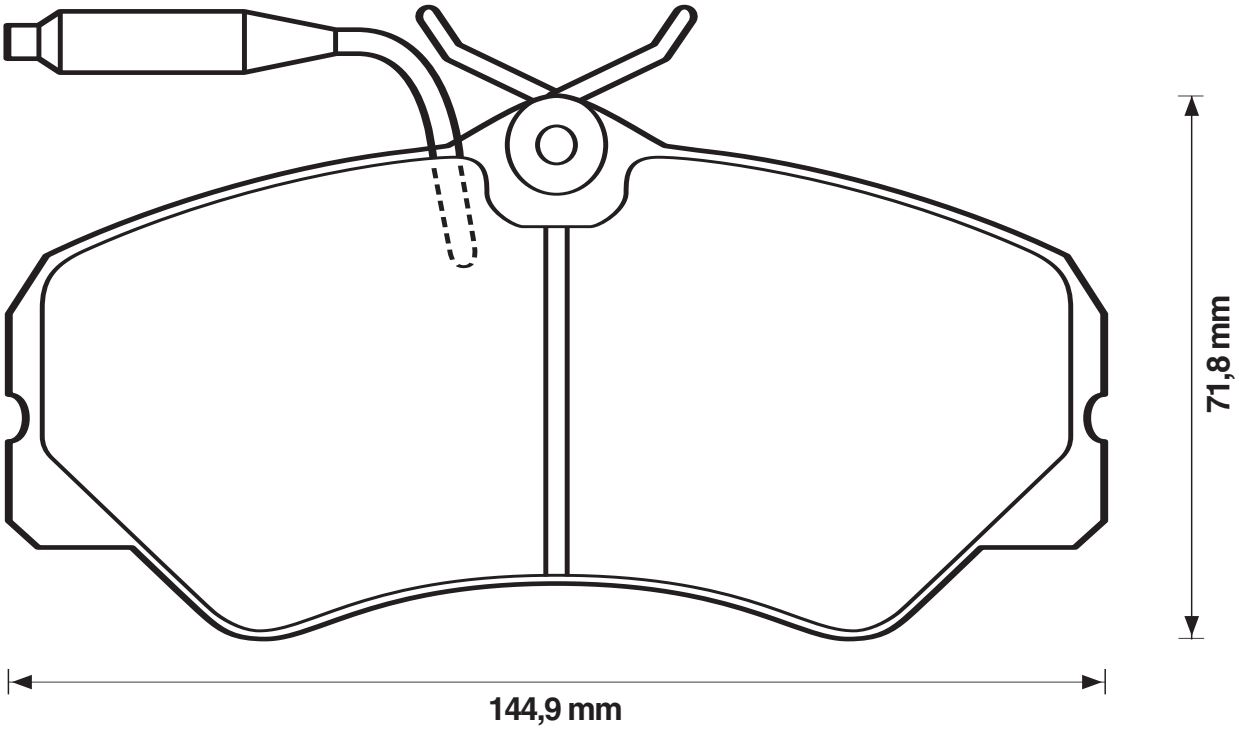

Citroen	C 25	p 24
Iveco (Fiat)	Ducato	p 112
Peugeot	J5	p 328

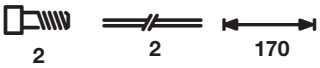

571416J

29038 | 4 | 2 | 19

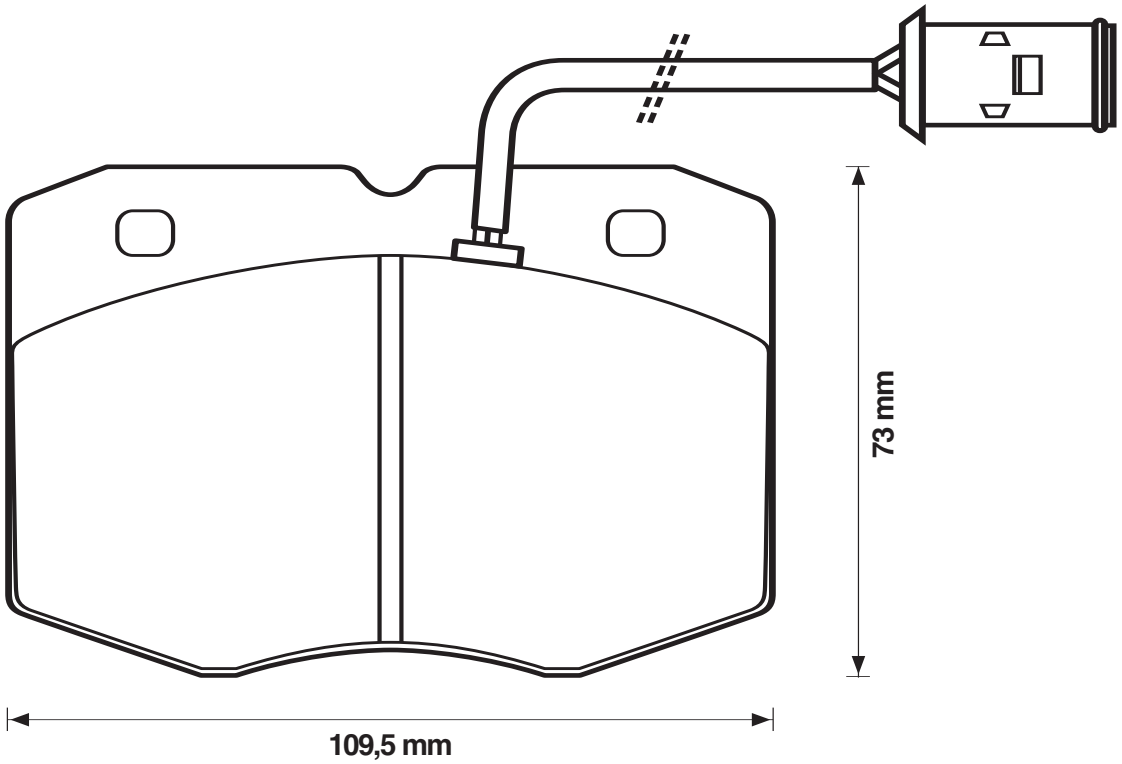

Iveco	Daily	p 84

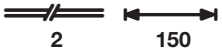

JURID by Honeywell

© JURID / All rights reserved 2005

571419J

29012 4 2 18

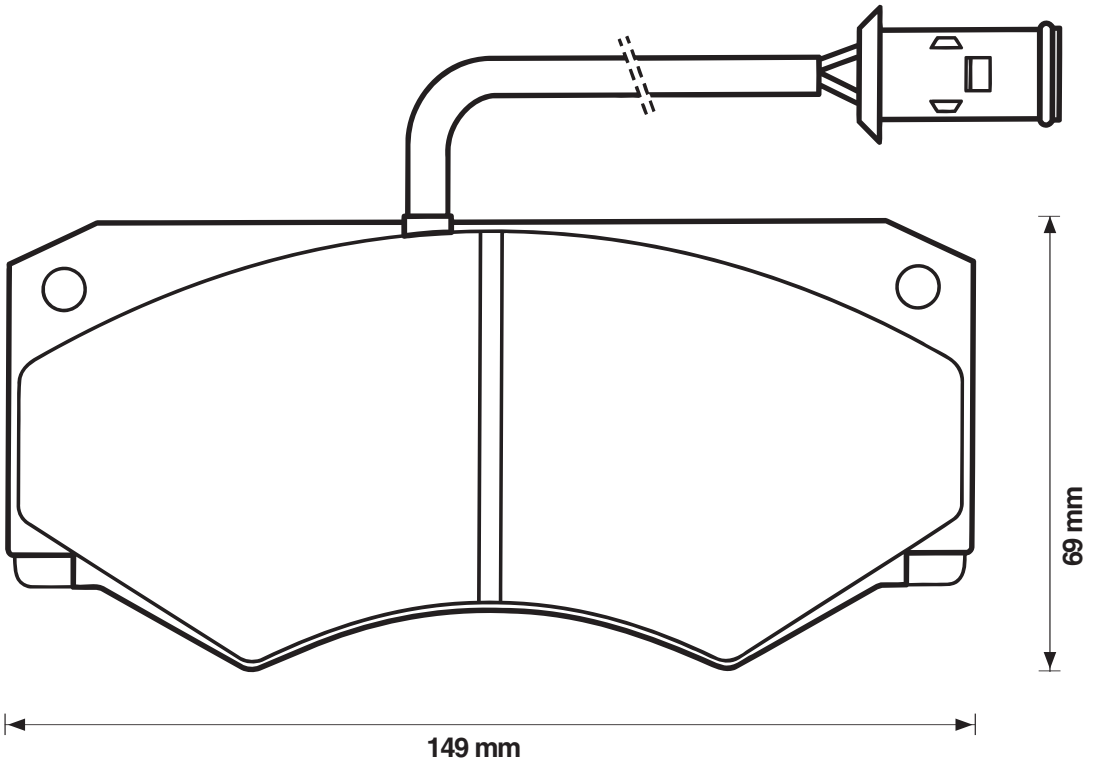

Iveco Daily p 86

2 200

571422J

21620 4 2 18

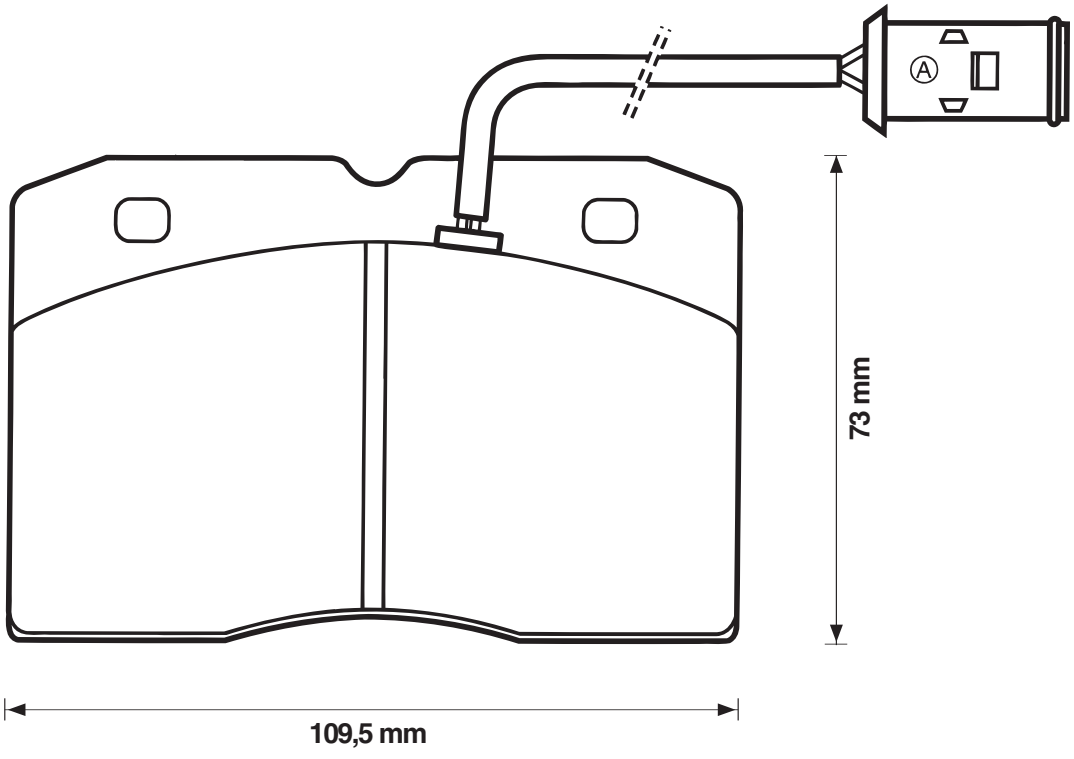

Iveco Daily p 84

2 170

JURID / All rights reserved 2005

	WVA	#		A	B
571442J	21160	4	2		18,5

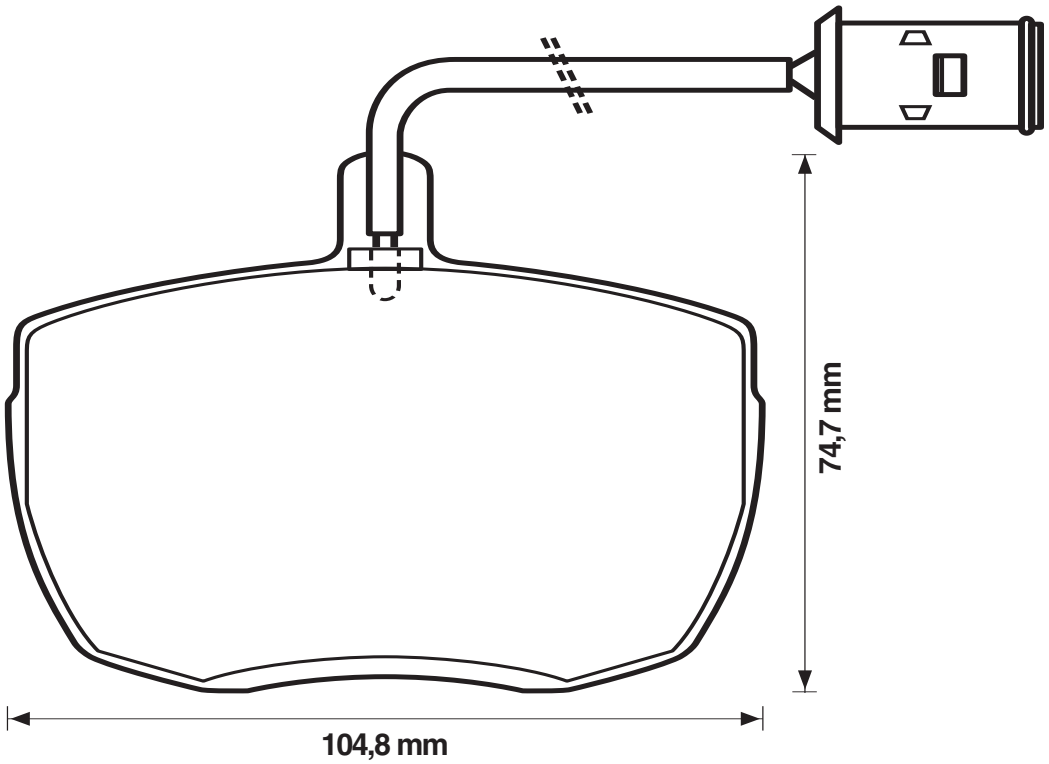

Iveco		Daily	p 84

2 150

	WVA	#		A	B
571446J	21006	4	2		18

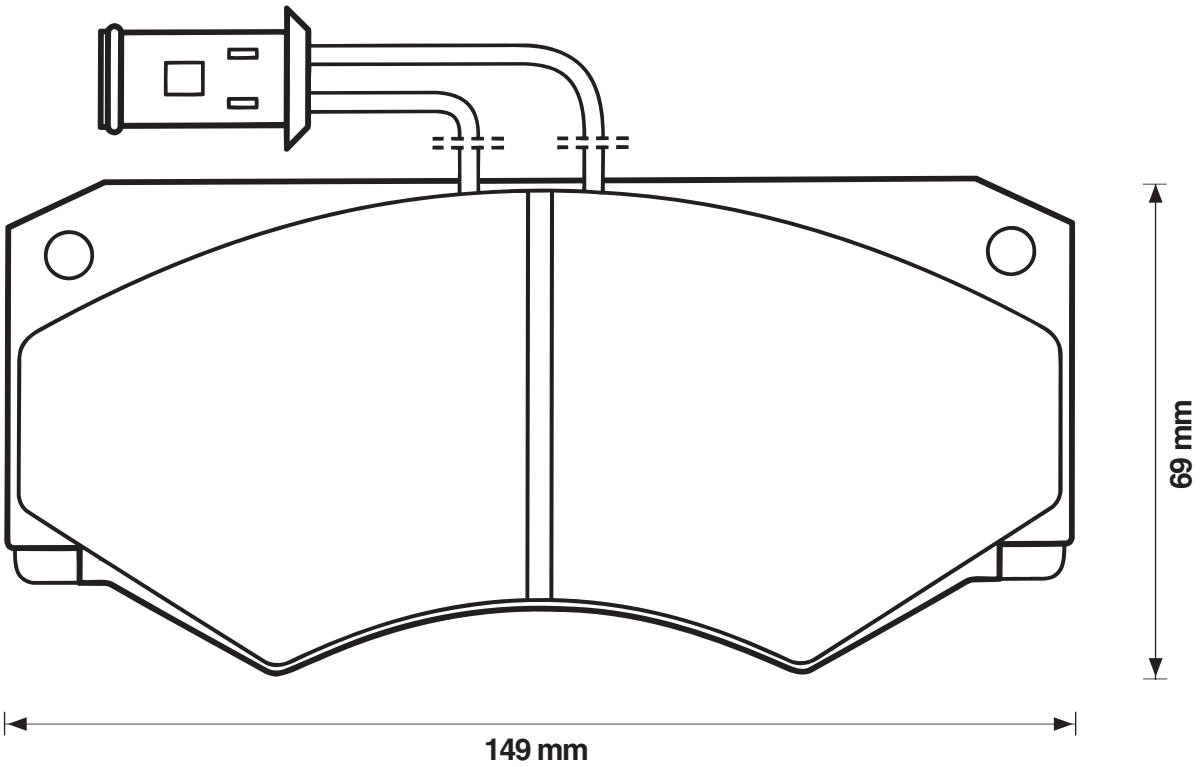

Iveco		Daily	p 86

2 200

JURID by Honeywell

© JURID / All rights reserved 2005

	WVA	#		A	B

571447J

	21188	4	2	18,3

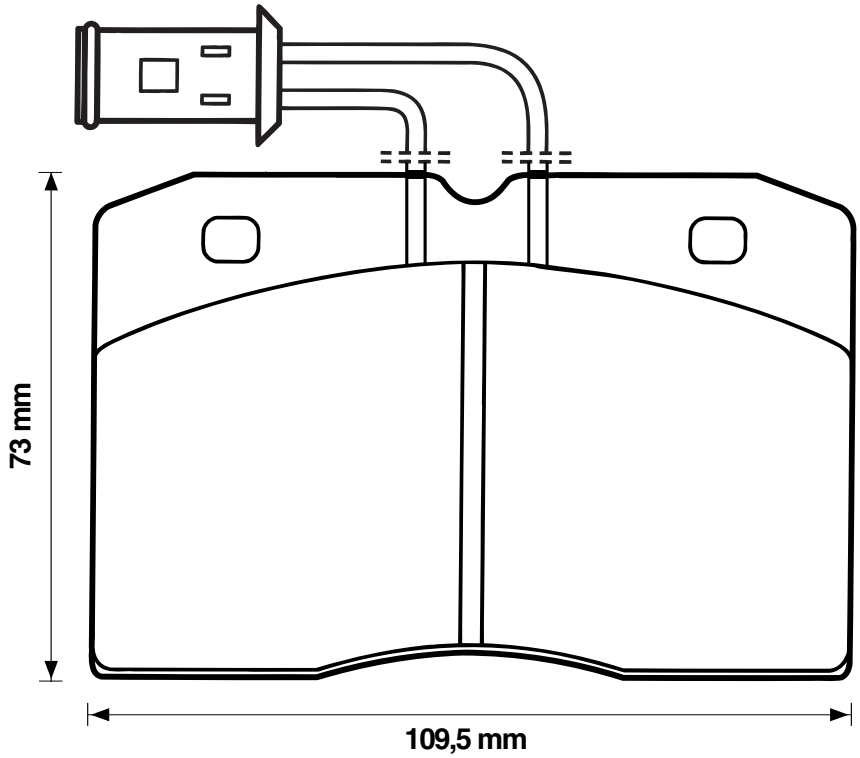

Iveco		Daily	p 84

2 170

571458J

	20652	4	18,2

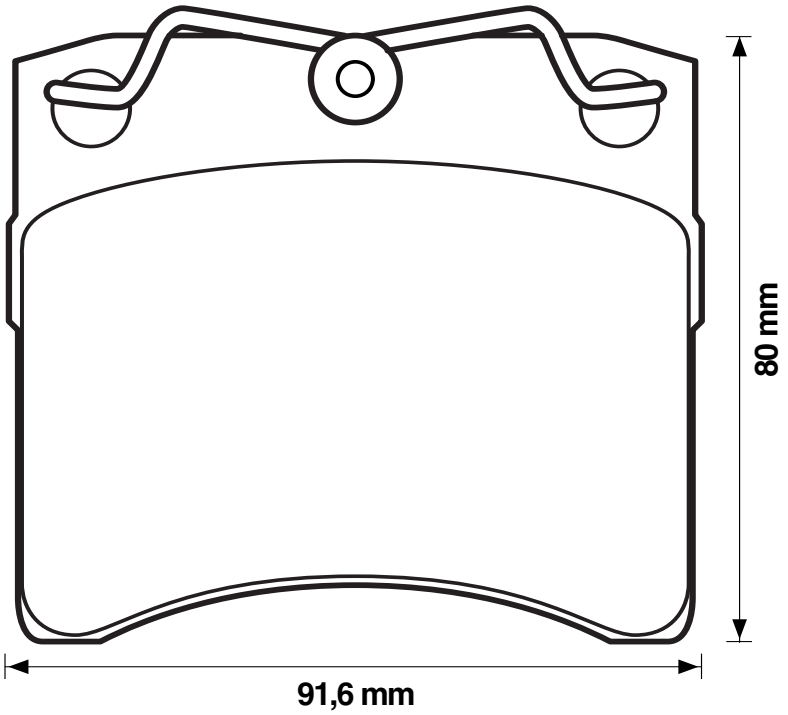

Volkswagen		Transporter (T4) Caravelle	p 416
		Transporter Van (T4)	p 416
		Transporter/Bus	p 416

© JURID / All rights reserved 2005

571460J

20124 4 19

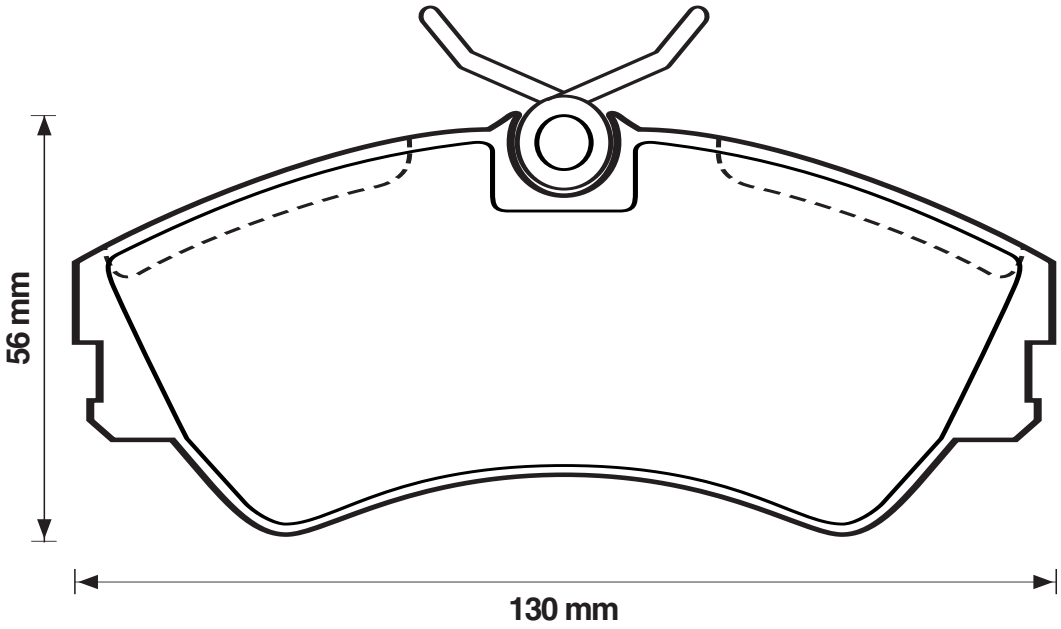

Volkswagen		Transporter/Bus	p 416

2

571521J

20934 4 14

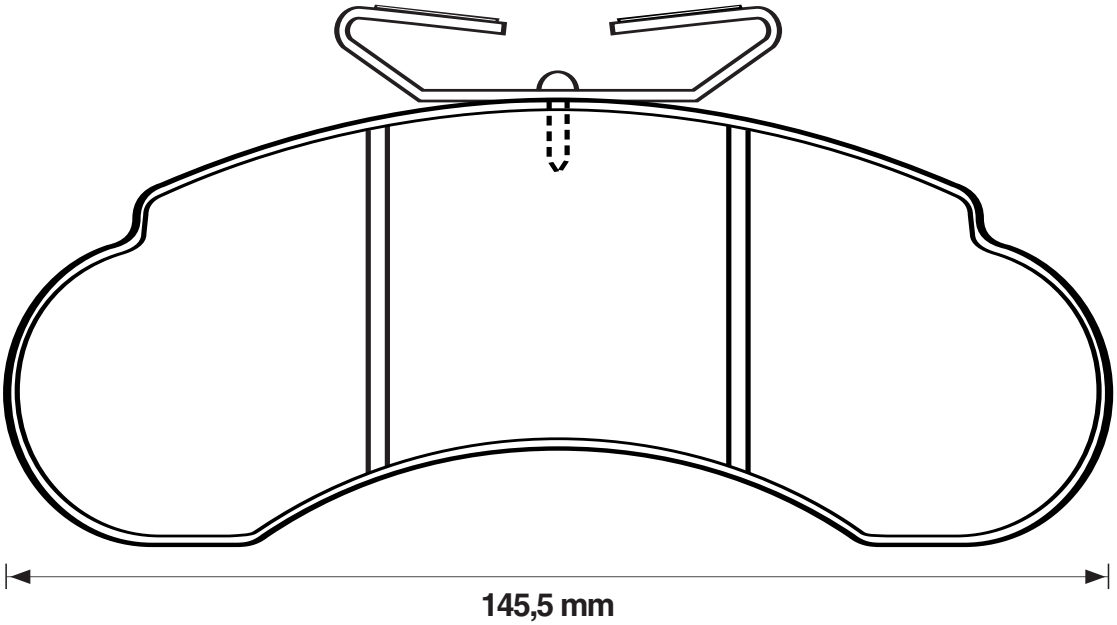

Mercedes Benz		MB	p 196
		MB	p 276

4

JURID / All rights reserved 2005



WVA # 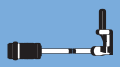

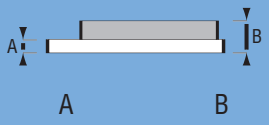

571543J

20323 4 16,5

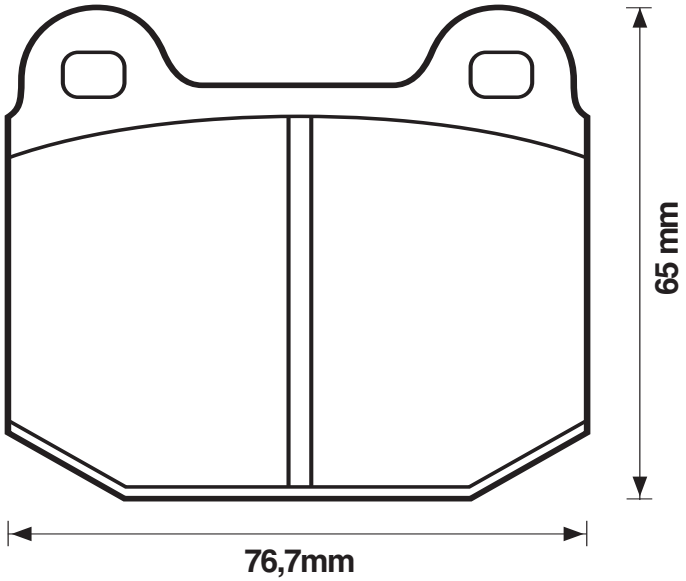

Steyr-Daimler-Puch  p 400

571745J

21470 4 19

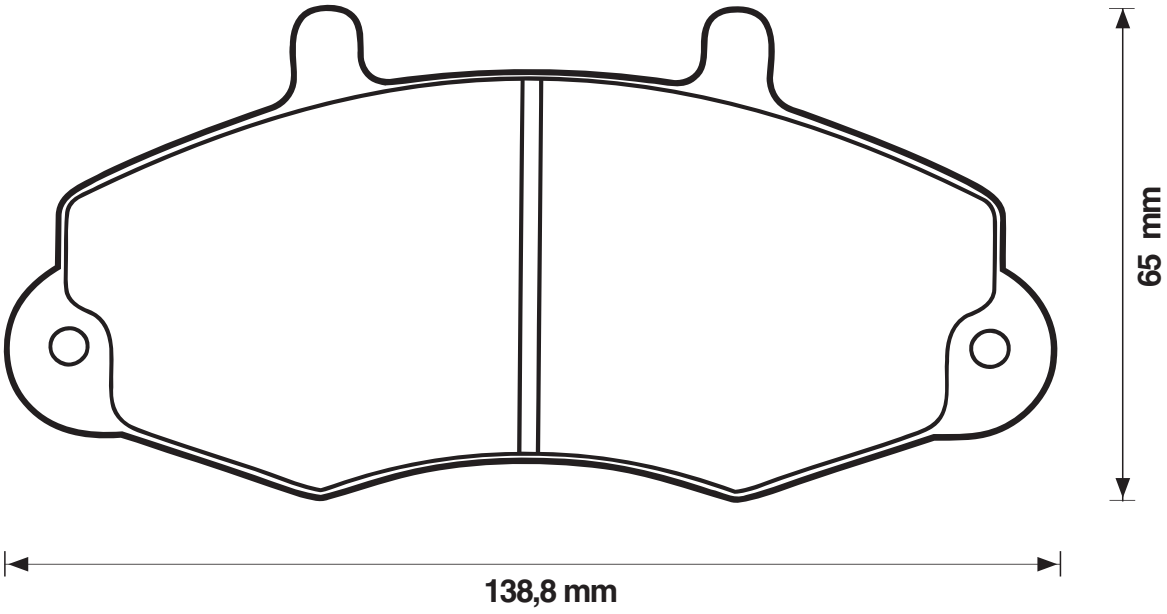

Ford  Tourneo p 66
Transit p 68

JURID / All rights reserved 2005

JURID by Honeywell

571746J

21469 4 19

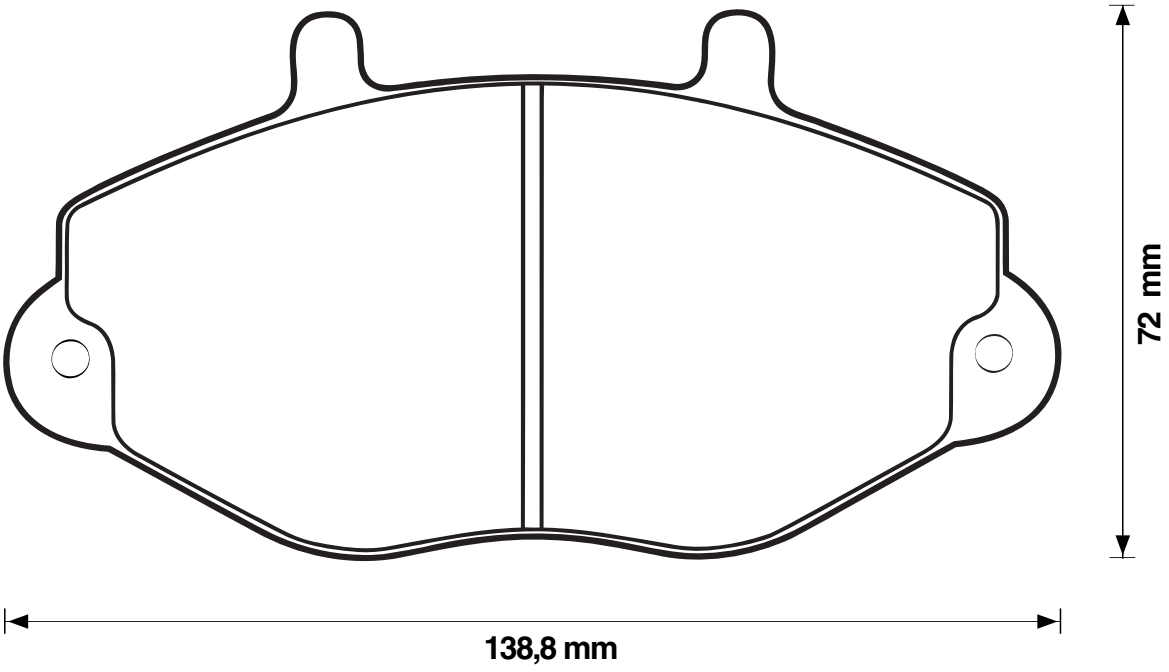

Ford		Tourneo	p 66
		Transit	p 68

571820J

21019 4 2 15

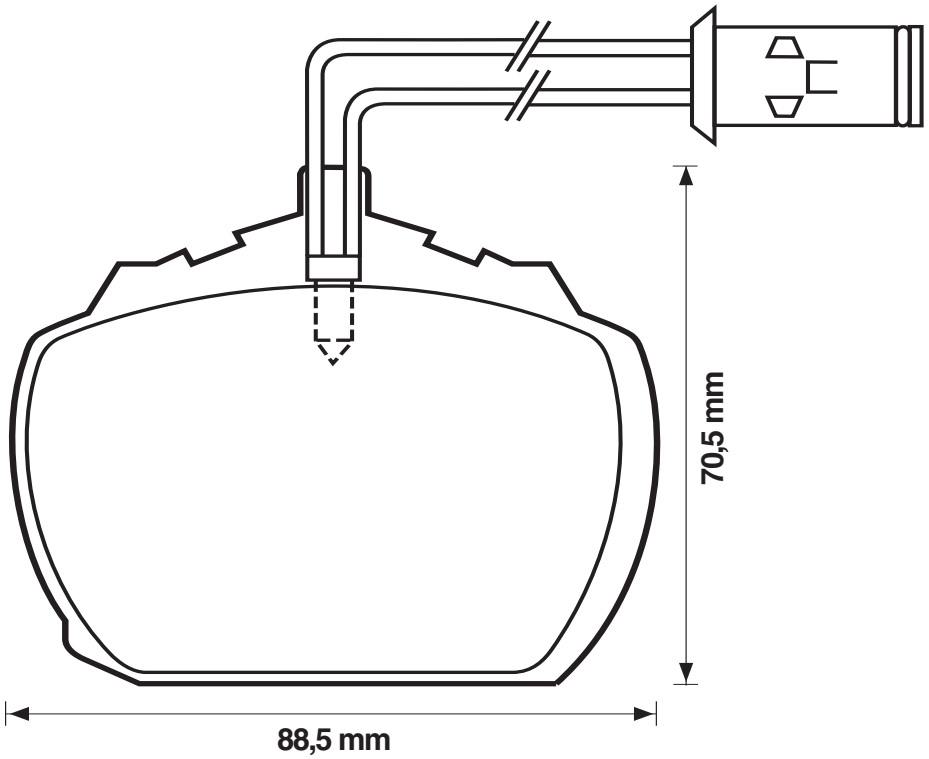

Bedford		KB	p 12

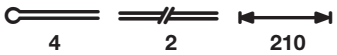

JURID / All rights reserved 2005

571822J

20904 4 18

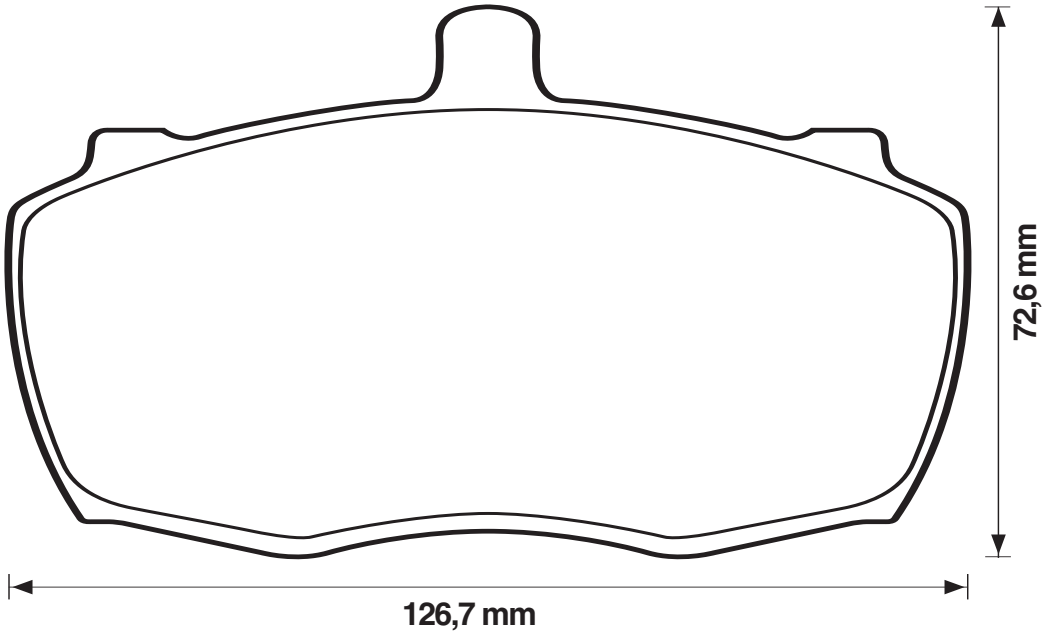

Daf		200, 400	p 30
Ford		Transit	p 66
Leyland / DAF		Convoy, Sherpa	p 142
Renault Trucks (Dodge)			p 338

571839J

21797 4 2 19,5

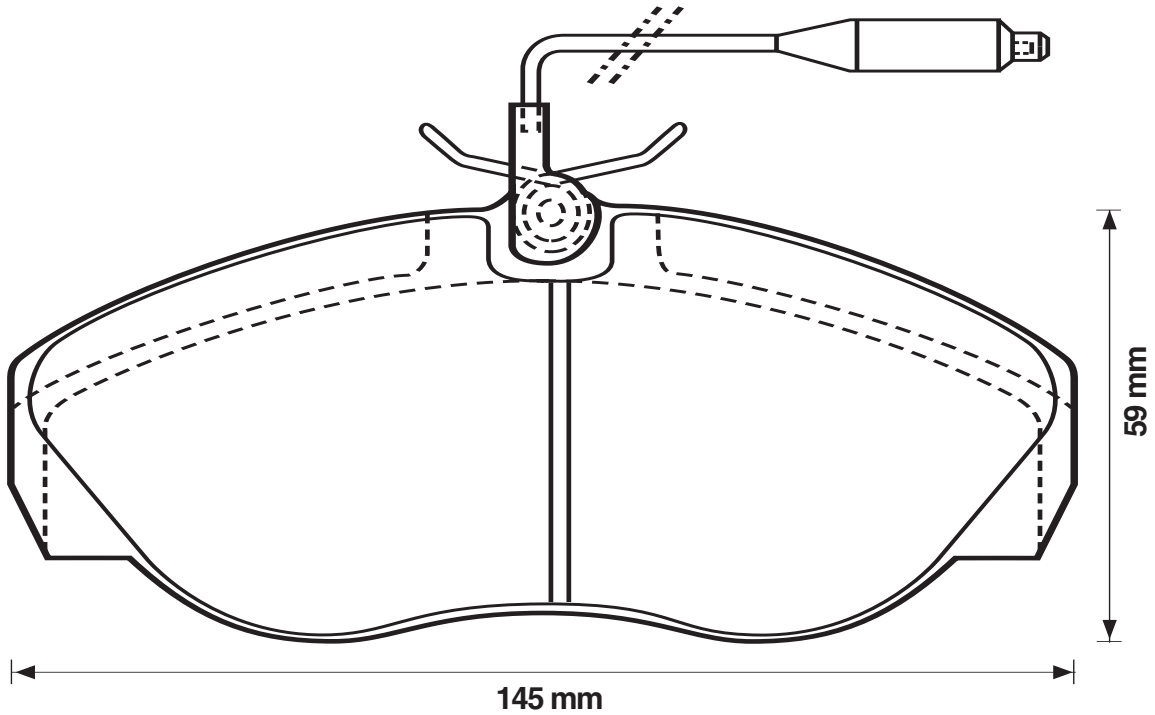

Citroen		Jumper	p 26
Iveco (Fiat)		Ducato	p 112
Peugeot		Boxer	p 326

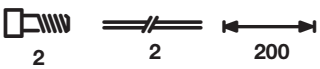

JURID / All rights reserved 2005

JURID by Honeywell

	WVA	#		A	B
571840J	21799	4	2		19,5

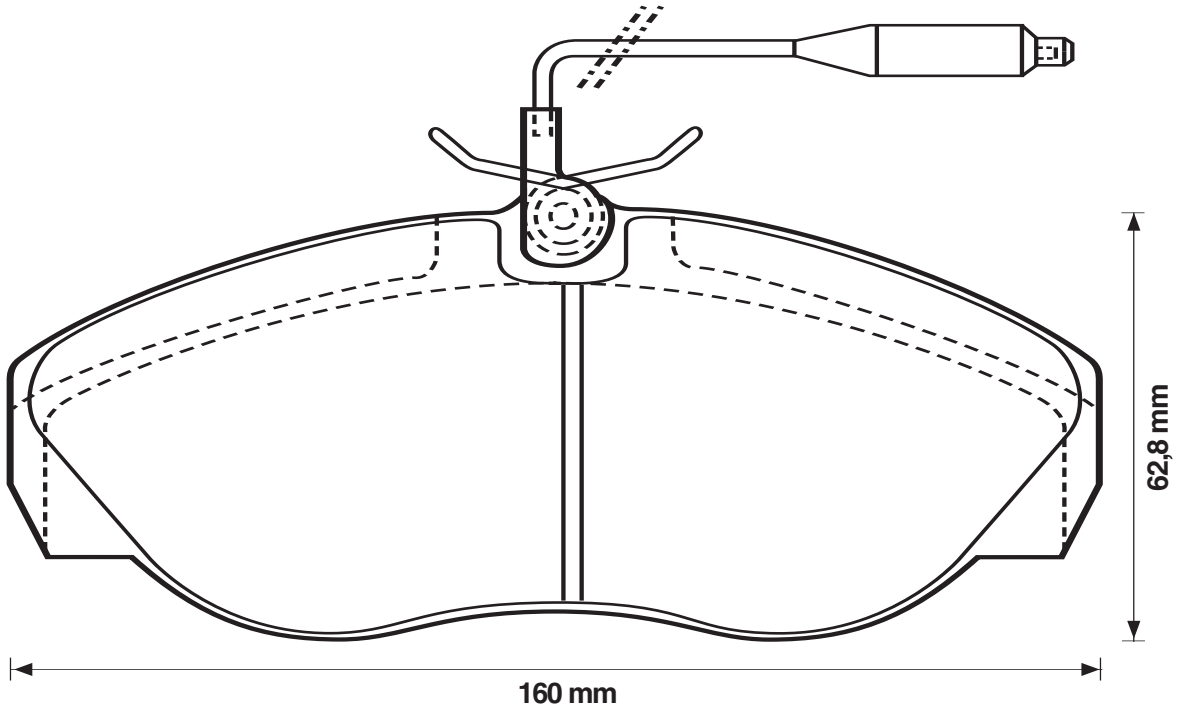

Citroen		Jumper	p 26
Iveco (Fiat)		Ducato	p 112
Peugeot		Boxer	p 326

2 2 200

	WVA	#		A	B
571843J	23003	4	2		19

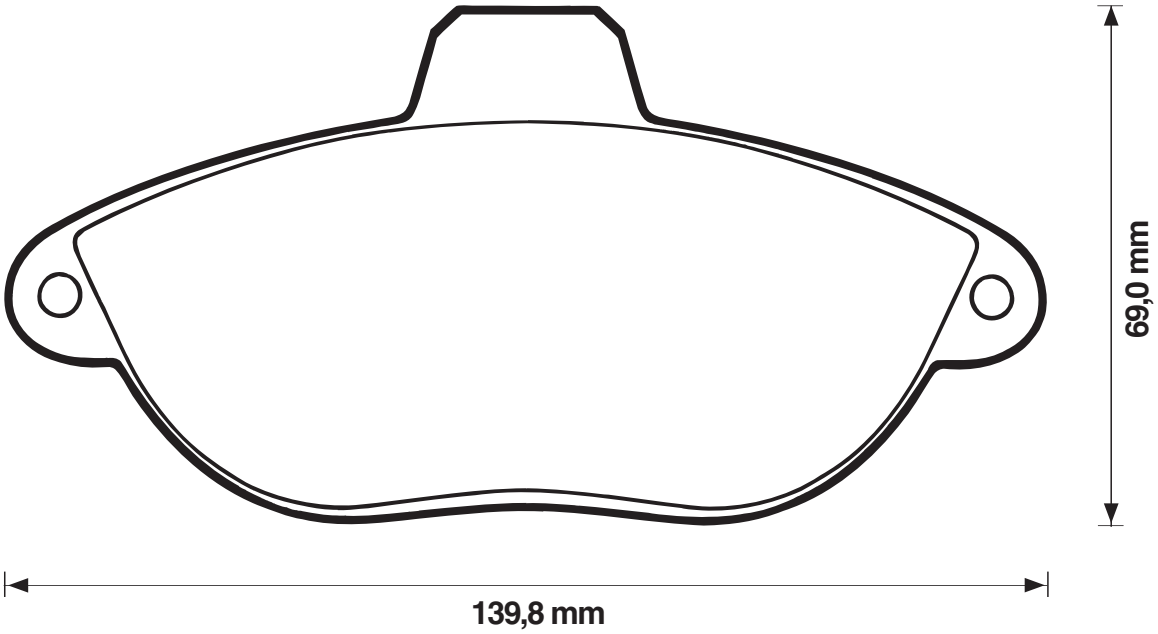

Citroen		Jumpy	p 26
Iveco (Fiat)		Scudo	p 114
Peugeot		Expert	p 326

2 2 2 2 2 270

JURID by Honeywell

© JURID / All rights reserved 2005

WVA # A B

571844J

21576 4 20,7

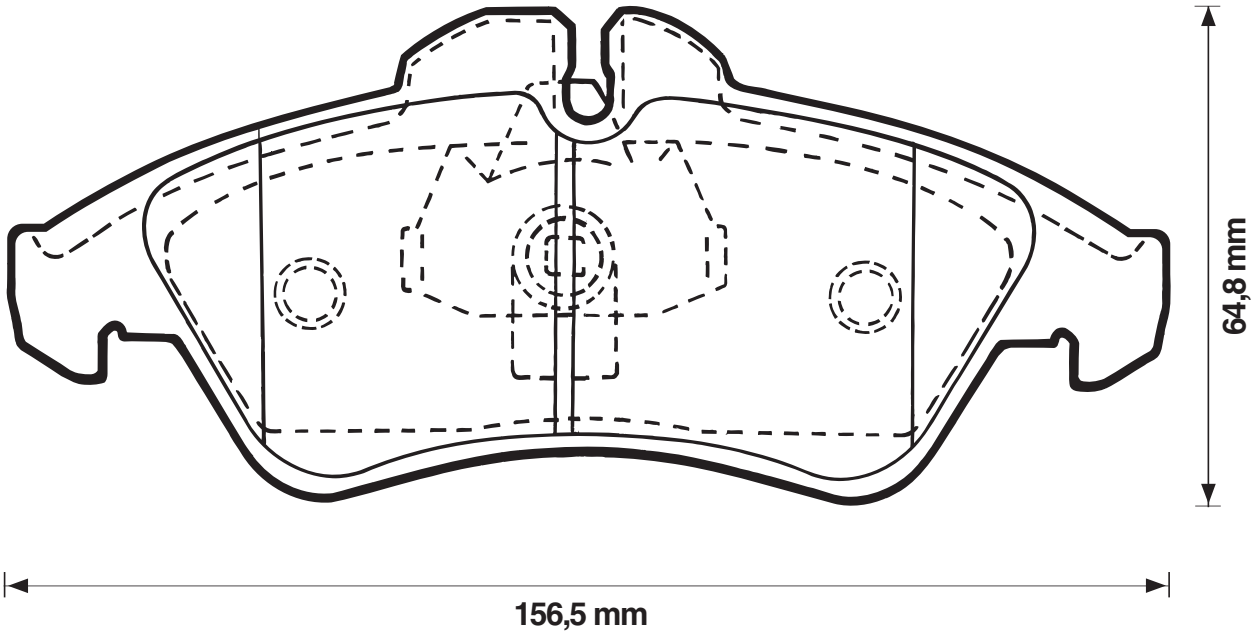

Mercedes Benz		Sprinter	p 196
		Vito	p 200
Volkswagen		LT	p 414

571845J

21904 4 2 16,9

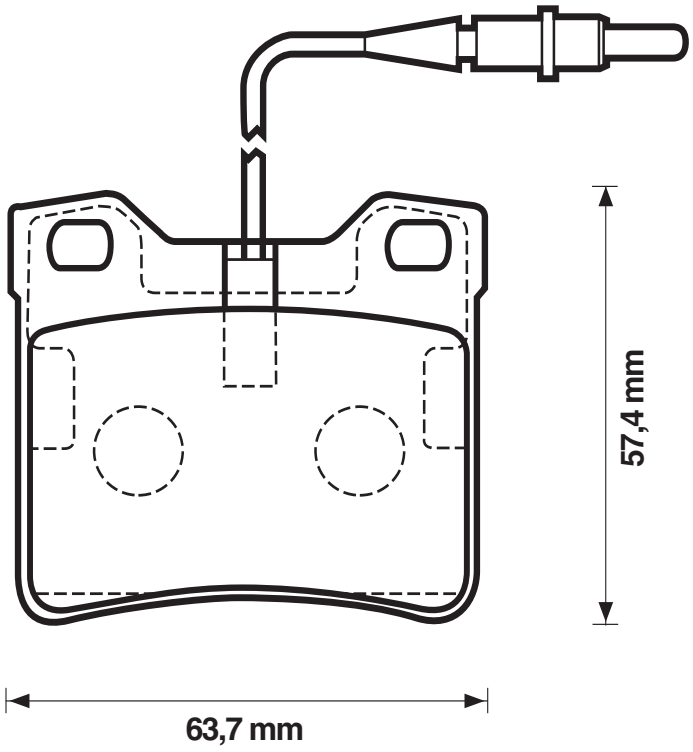

Mercedes Benz		Vito	p 200

2 110

© JURID / All rights reserved 2005

571846J

21621 4 17,3

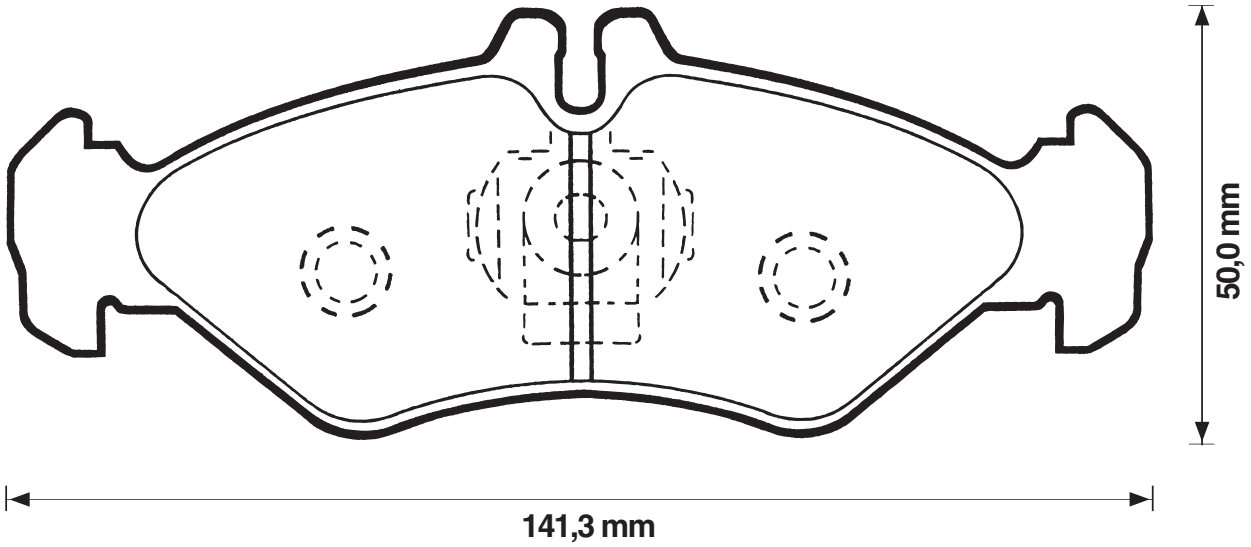

Mercedes Benz		Sprinter	p 196
Volkswagen		LT	p 414

571847J

21478 4 19,2

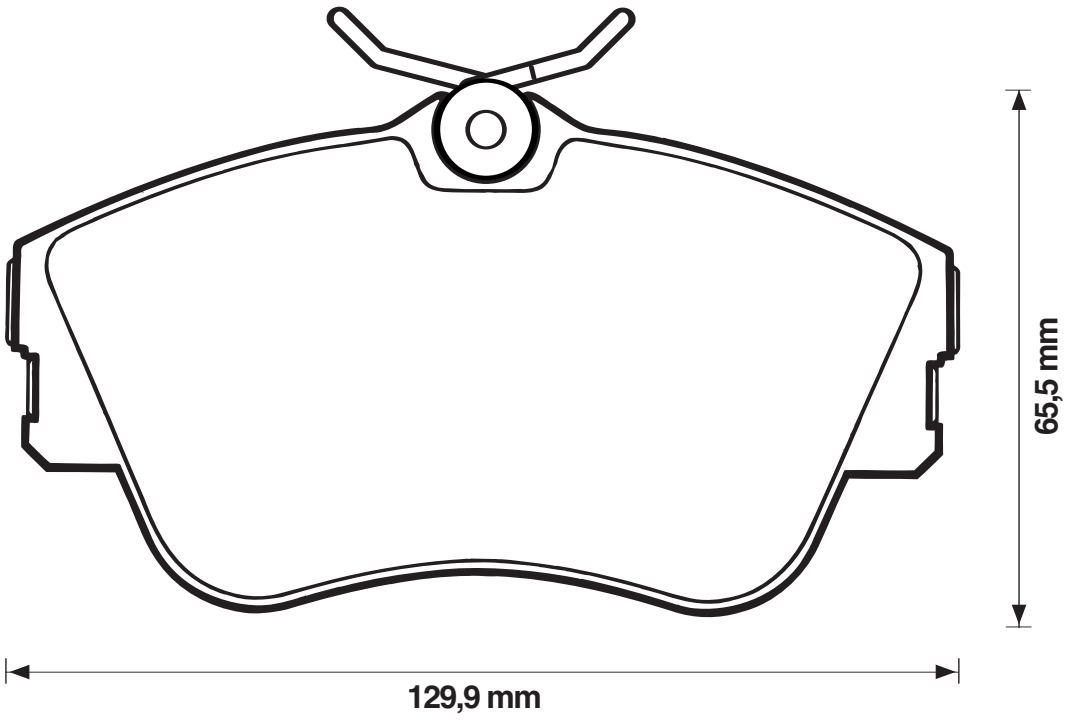

Volkswagen		Transporter/Bus	p 416

2

JURID by Honeywell
JURID / All rights reserved 2005

	WVA	#		A	B
571875J	21882	4			17,3

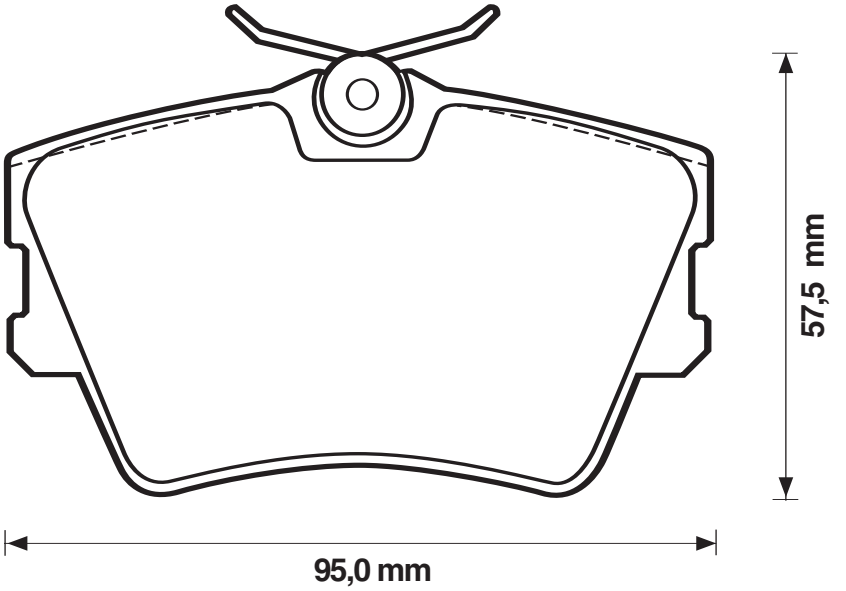

Volkswagen		Transporter/Bus	p 416

	WVA	#		A	B
571910J	21592	4			18,8

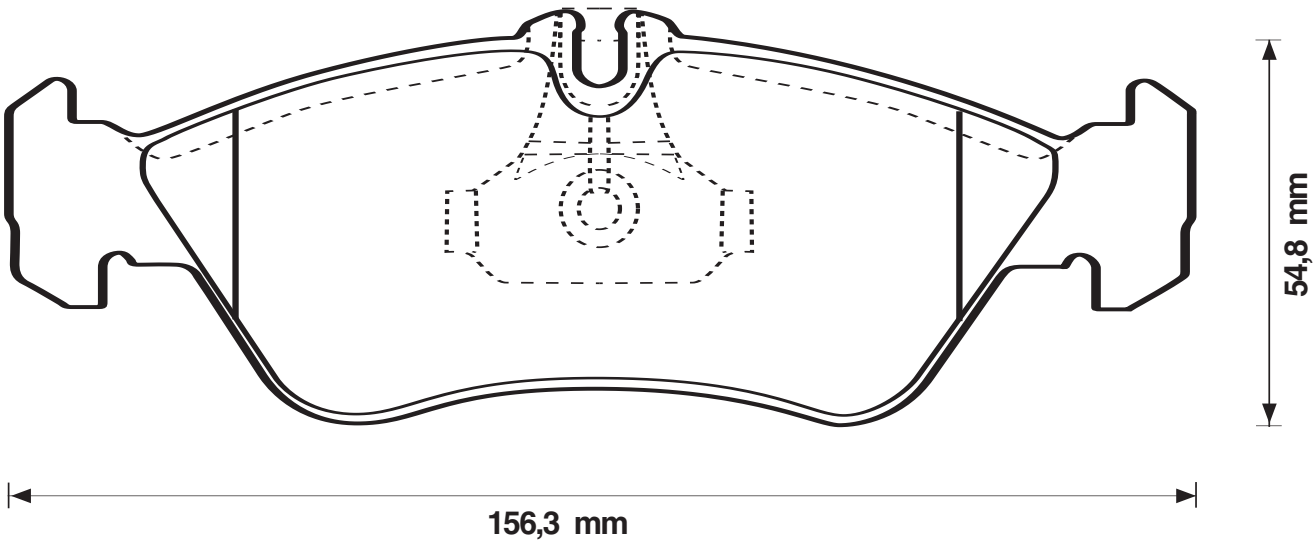

Mercedes Benz		Sprinter	p 198
Volkswagen		LT	p 414

JURID / All rights reserved 2005

571932J

71932 4 18

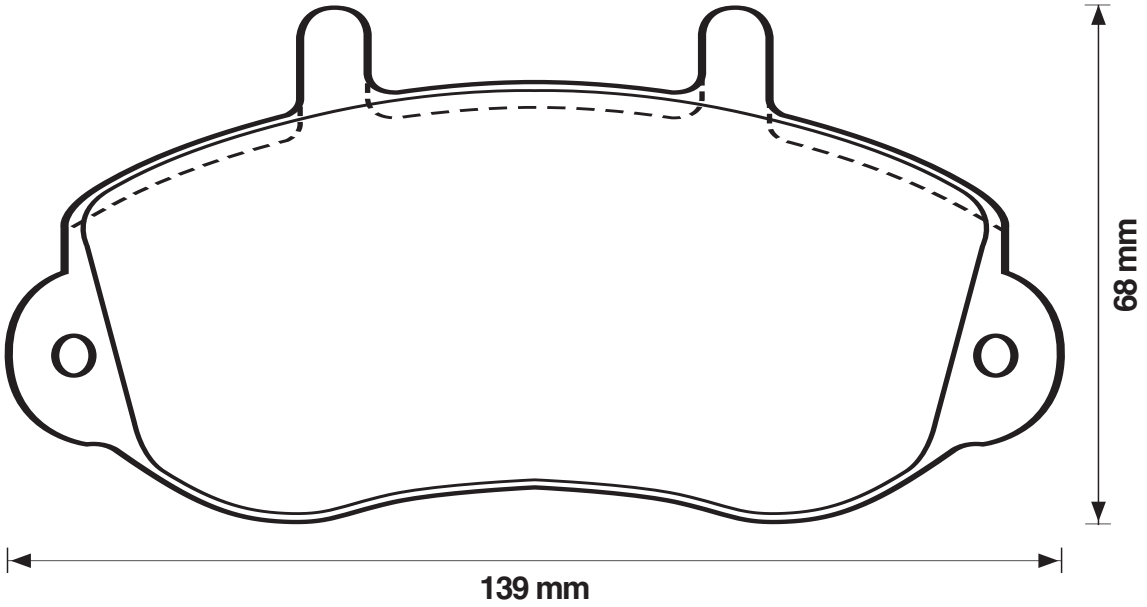

Opel		Movano	p 312
Renault		Master	p 330
Vauxhall		Movano	p 411

571934J

21883 4 19,6

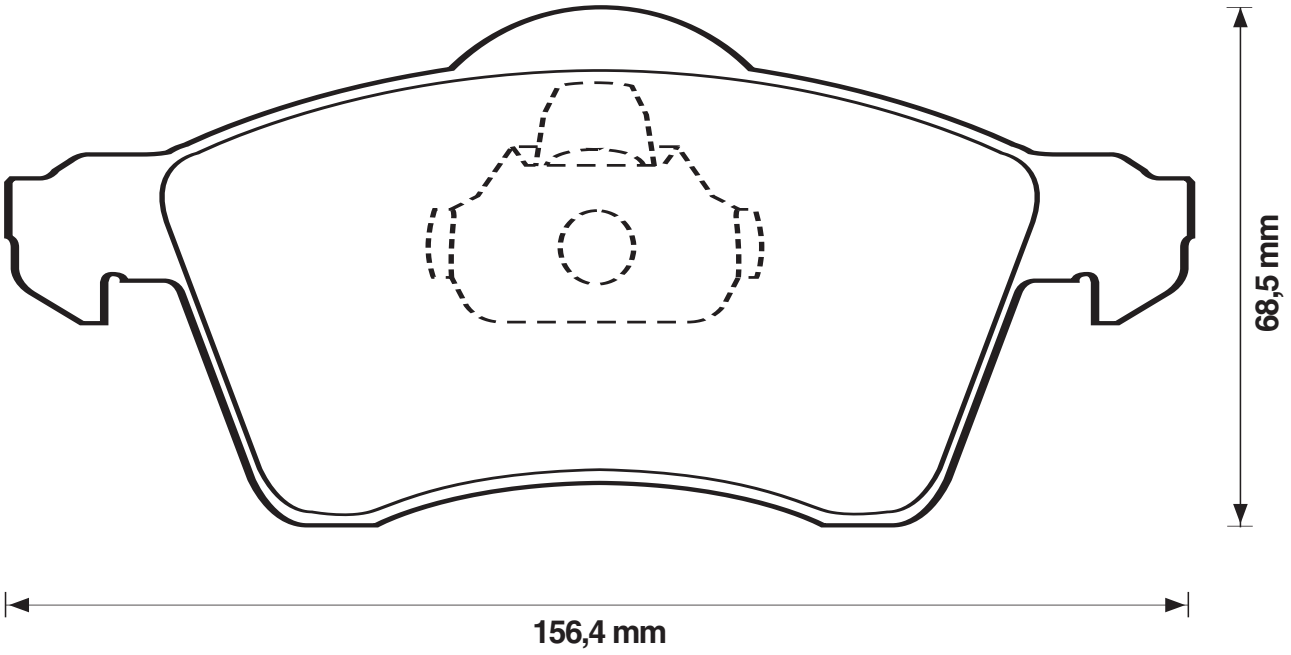

Volkswagen		Transporter (T4) Caravelle	p 416
		Transporter/Bus	p 416

JURID by Honeywell

© JURID / All rights reserved 2005

571946J

23022 4 21

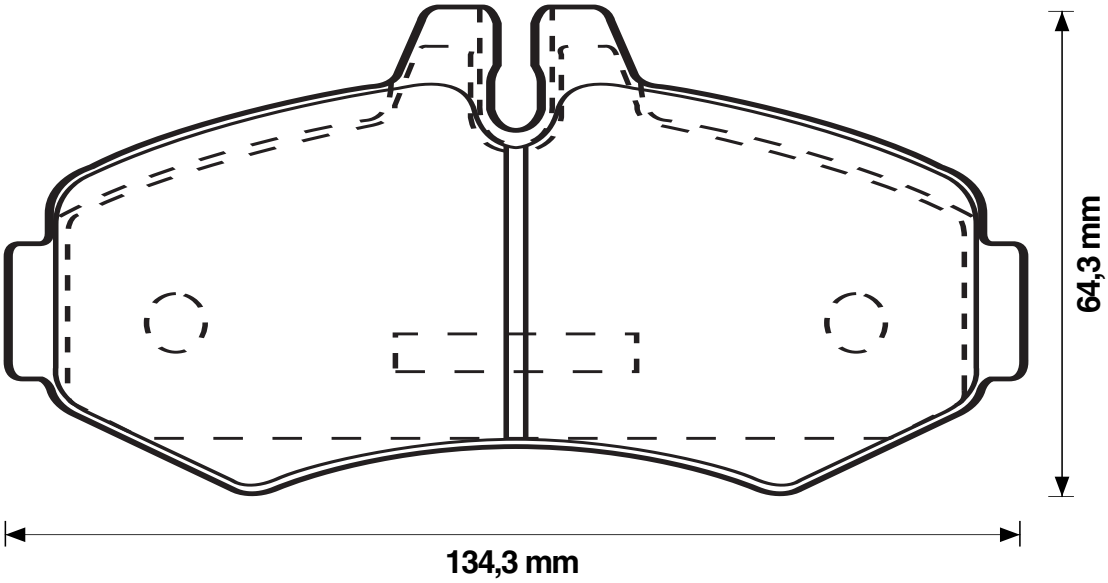

Mercedes Benz Vito p 200

571947J

23020 4 18

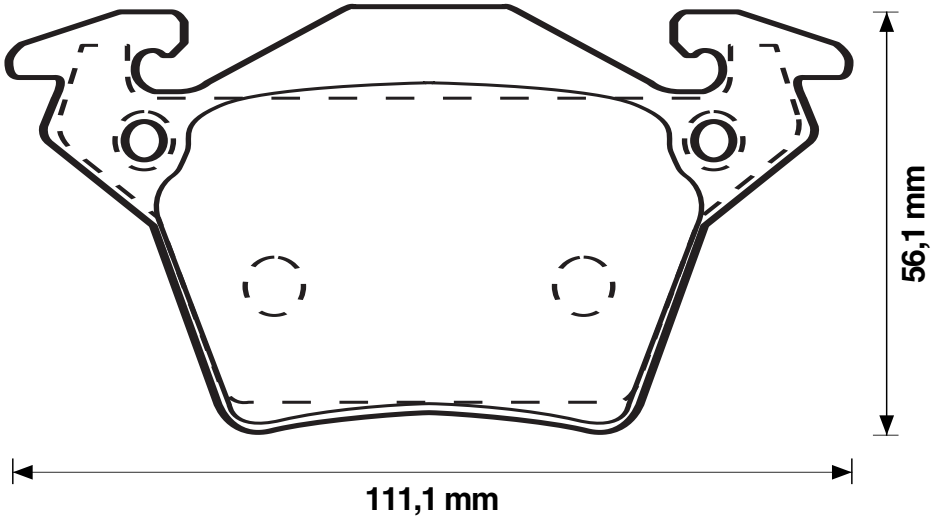

Mercedes Benz Vito p 200

JURID / All rights reserved 2005

WVA # A B

571948J

21634 4 18,2

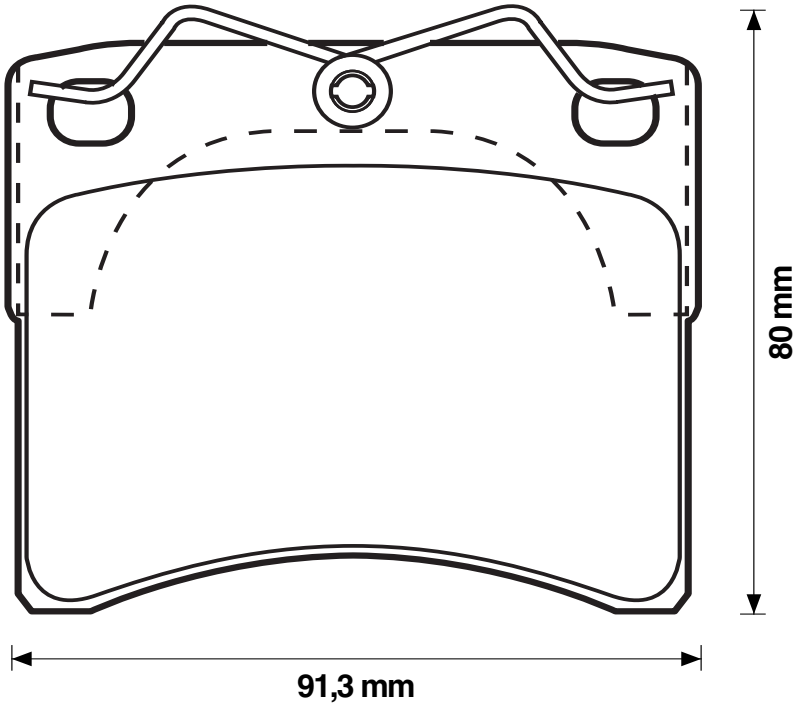

Volkswagen Transporter/Bus p 416

571950J

23021

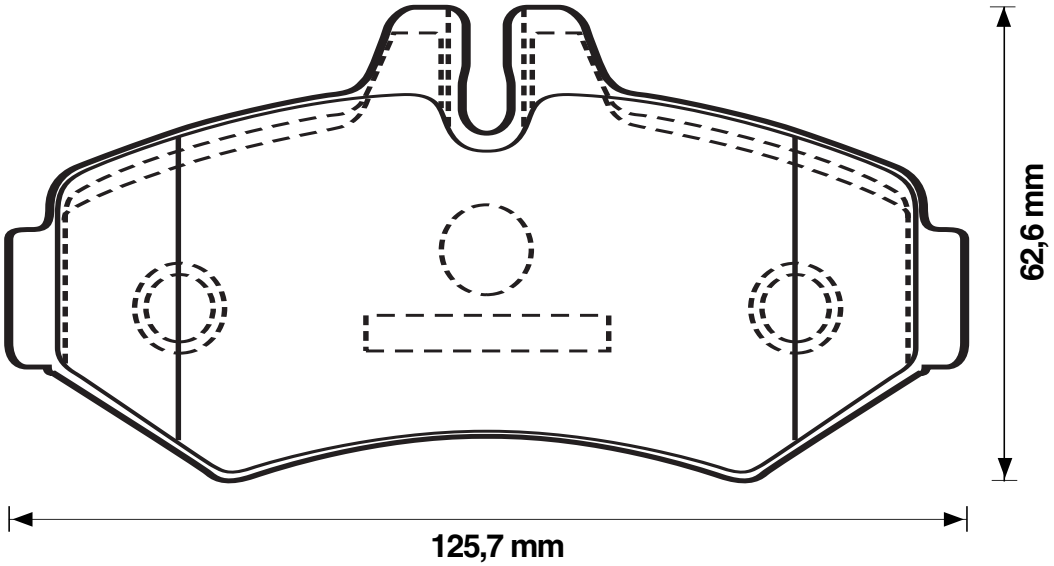

Mercedes Benz Sprinter p 198
Volkswagen LT p 414

JURID by Honeywell
© JURID / All rights reserved 2005

	WVA	#		A	B
572225J	21254	4	4		15

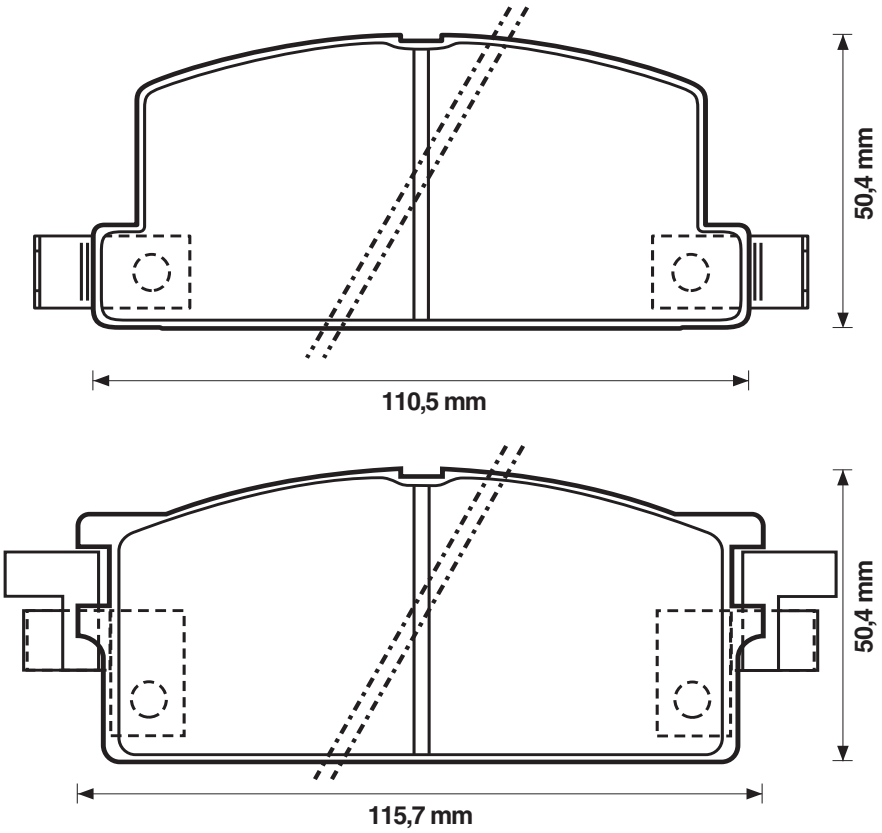

Bedford KB p 12

572250J	20731	4			15

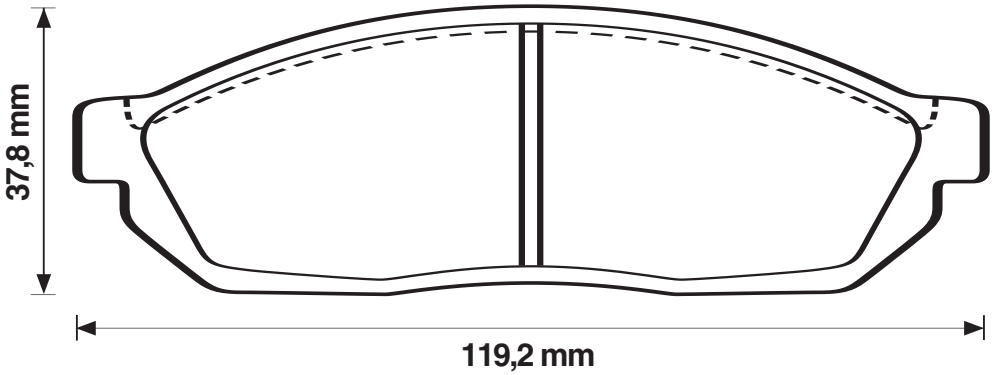

Bedford Rascal p 12

© JURID / All rights reserved 2005

	WVA	#		A	B
572258J	20880	4	4		15,5

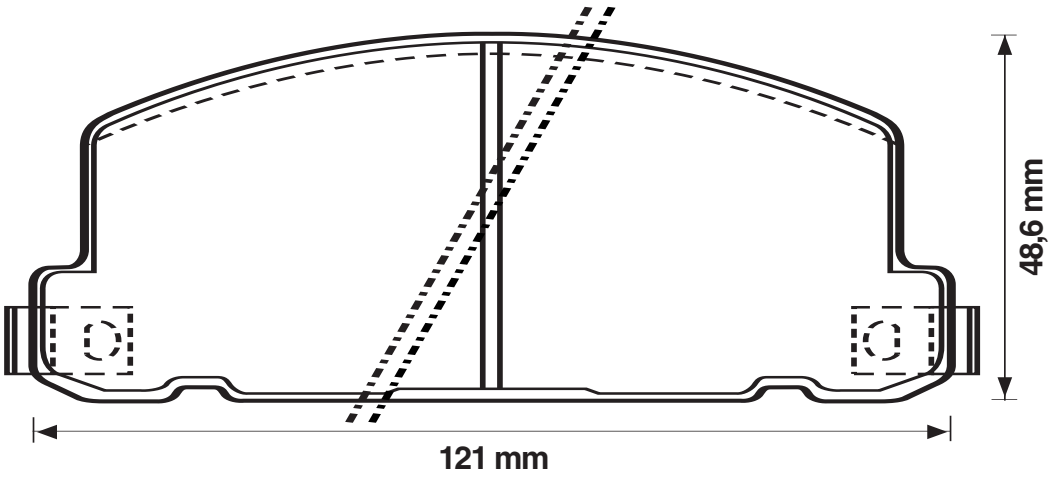

Bedford KB p 12

	WVA	#		A	B
572335J	21115	4			15,5

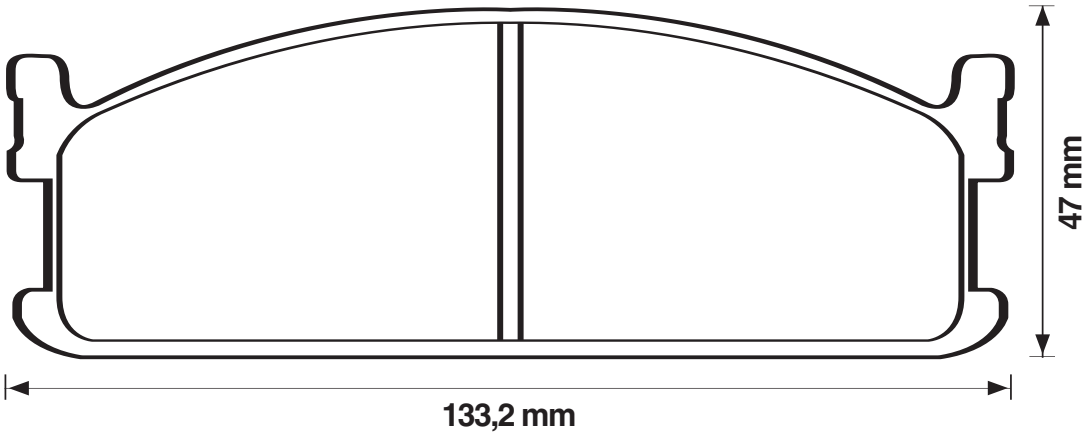

Bedford Midi p 10

JURID / All rights reserved 2005

572360

4 15

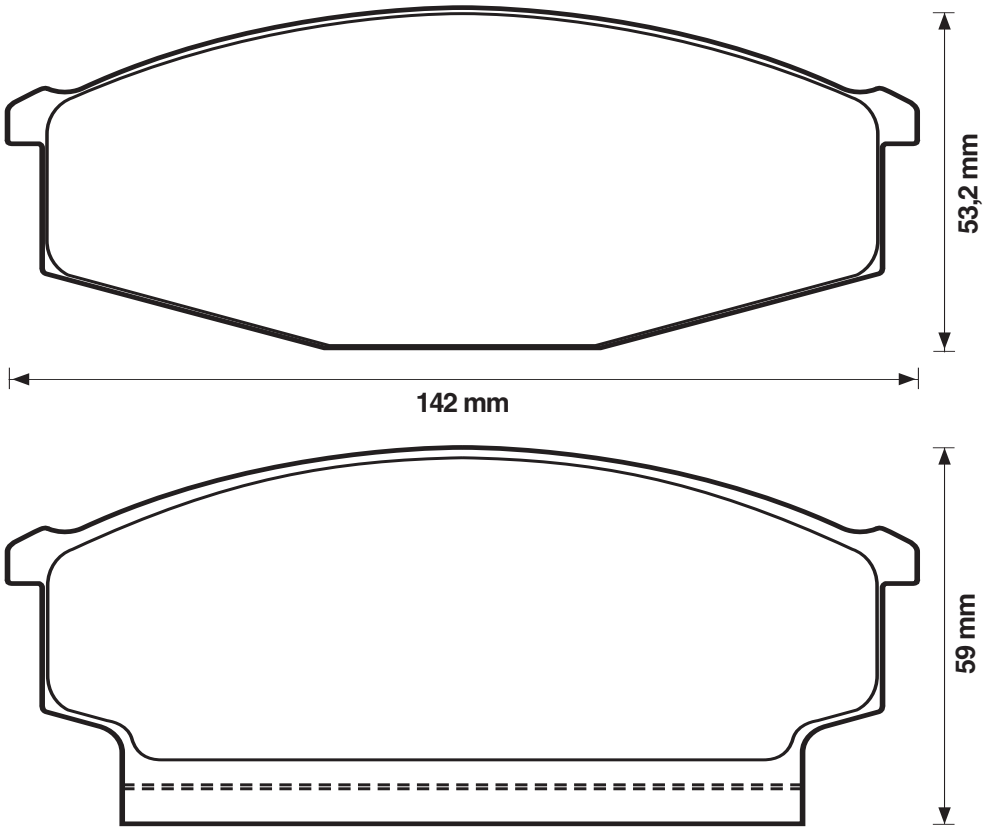

Nissan (Ebro) Cabstar p 304

572361

20863 4 16,7

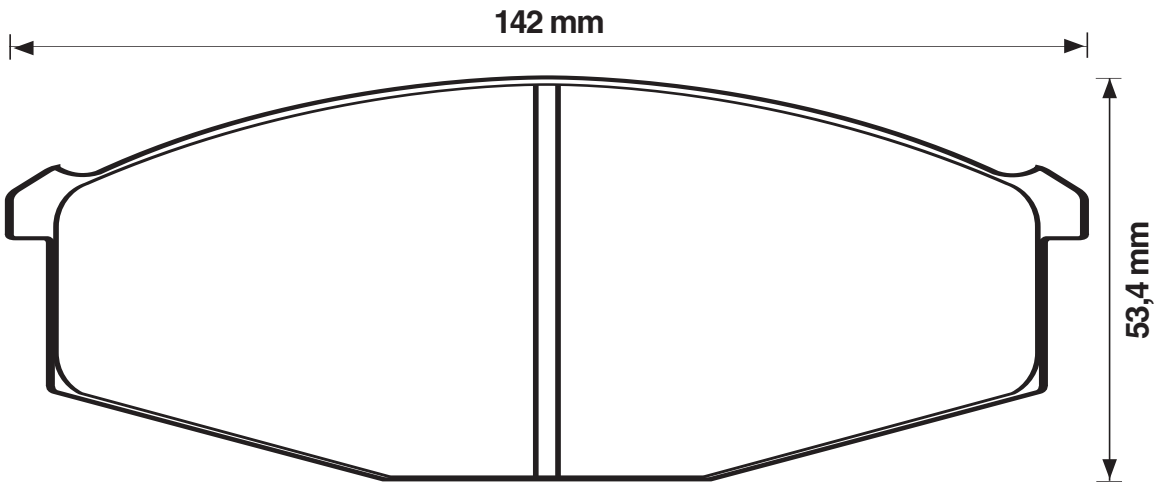

Nissan (Ebro) Cabstar p 304

JURID / All rights reserved 2005

	WVA	#		A	B
573015	23430	4	2		18,4

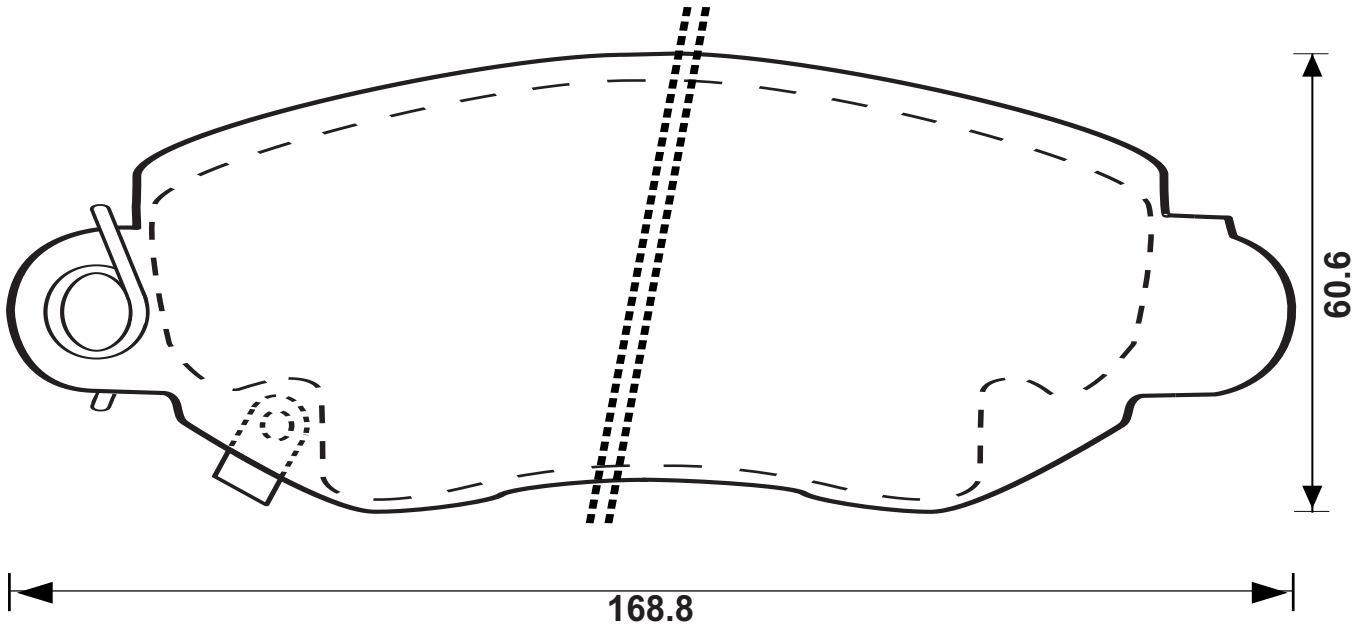

Ford		Transit	p 68

	WVA	#		A	B
573055	23669	4			16,5

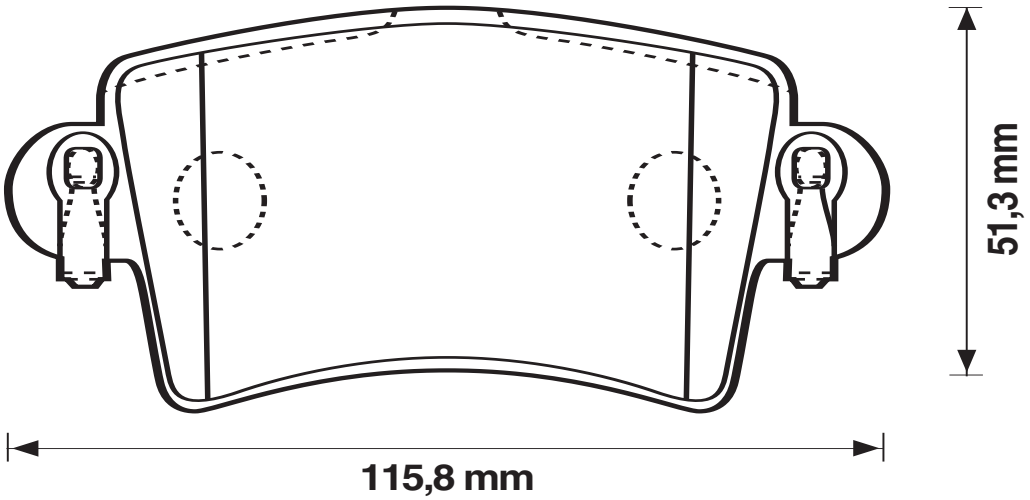

Opel		Movano	p 312
Renault		Master	p 330
Vauxhall		Movano	p 411

JURID / All rights reserved 2005

	WVA	#		A	B
573058	23099	4			18,5

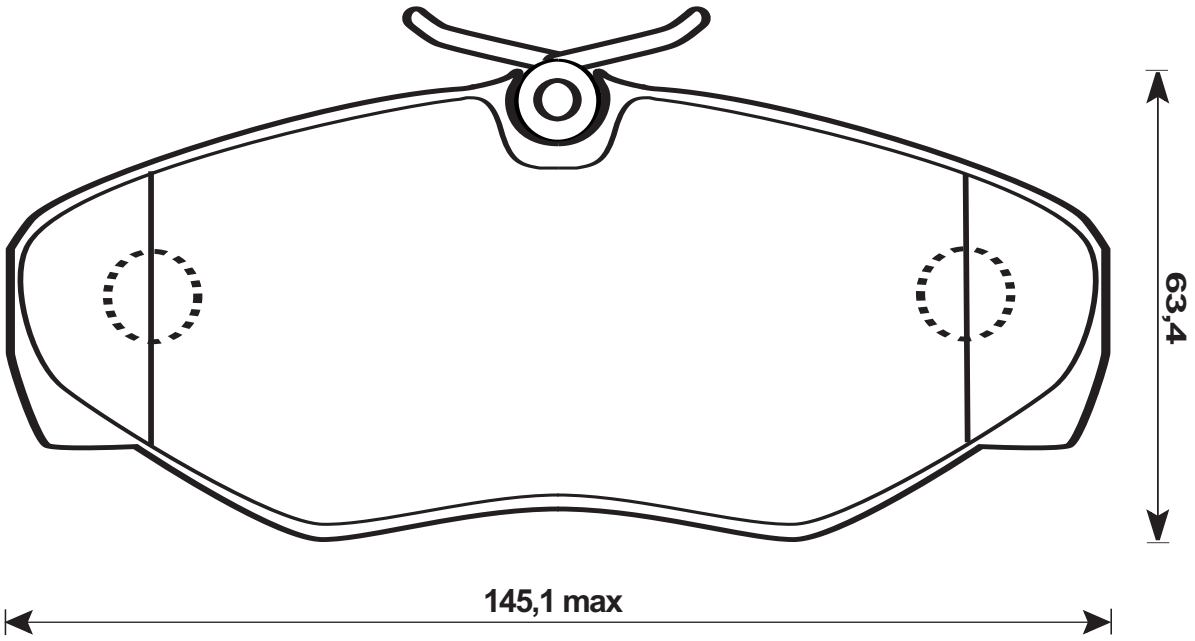

Opel		Vivaro	p 312
Renault		Trafic	p 330
Vauxhall		Vivaro	p 411

	WVA	#		A	B
573059		4			17

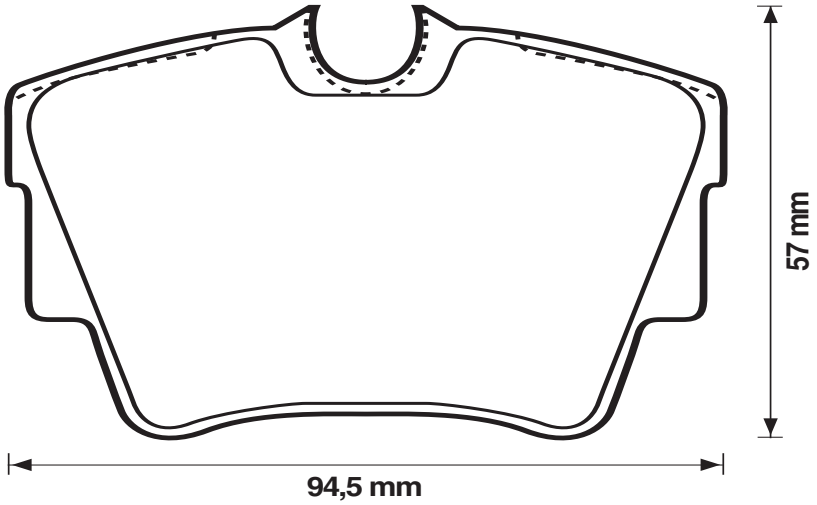

Opel		Vivaro	p 312
Renault		Trafic	p 330
Vauxhall		Vivaro	p 411

JURID / All rights reserved 2005

	WVA	#		A	B
573060	21627	4	1		19,5

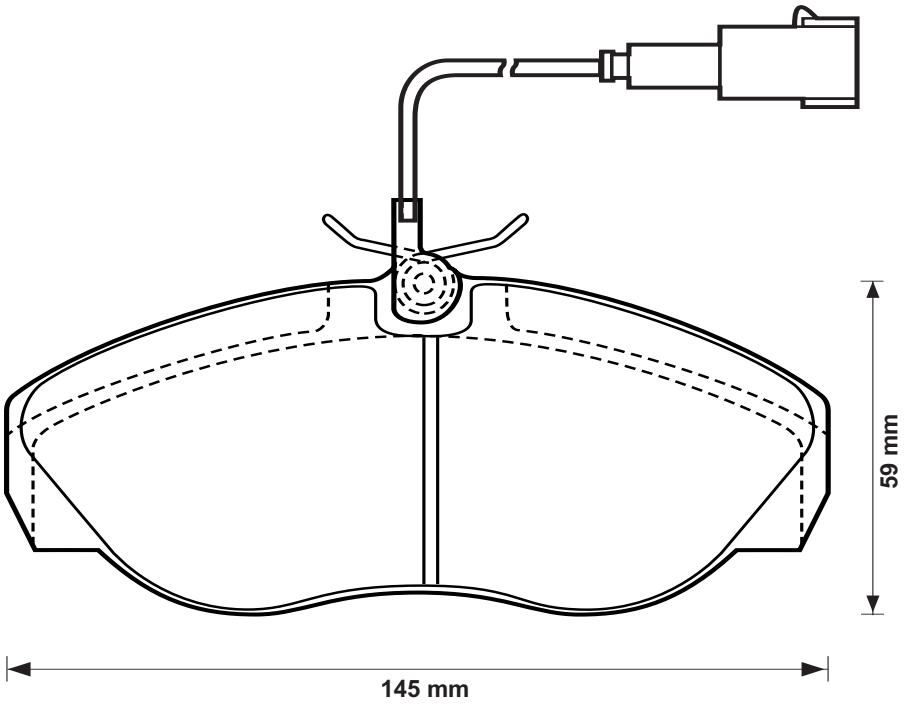

Citroen		Jumper	p 26
Iveco (Fiat)		Ducato	p 112
Peugeot		Boxer	p 326

4 — 1 — 305

	WVA	#		A	B
573061	21799	4	1		19,5

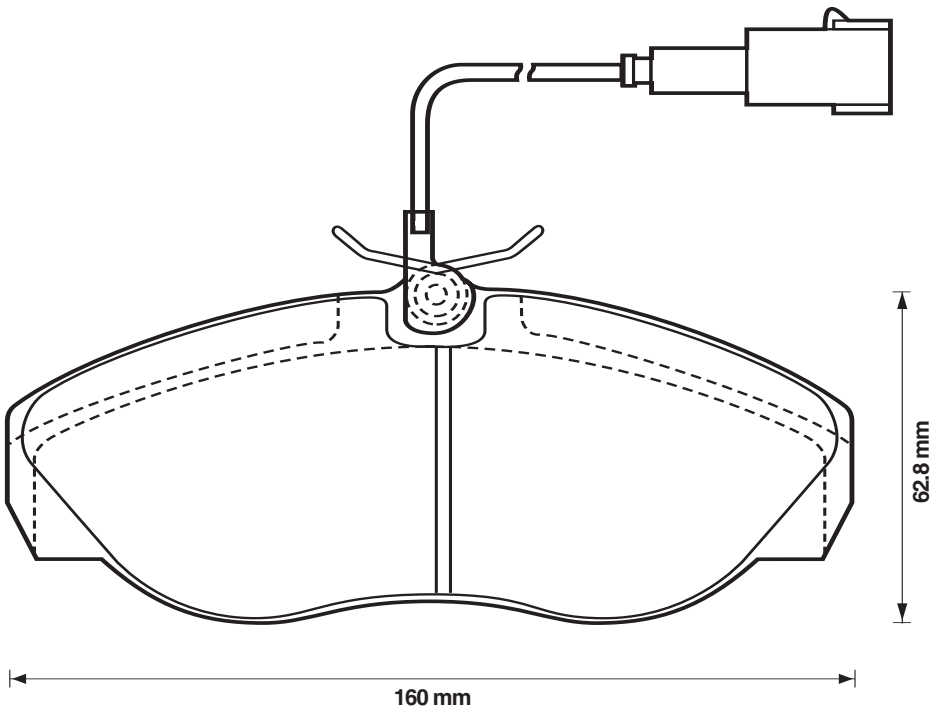

Citroen		Jumper	p 26
Iveco (Fiat)		Ducato	p 112
Peugeot		Boxer	p 326

4 — 1 — 305

JURID by Honeywell

© JURID / All rights reserved 2005

	WVA	#		A	B
573081J	29038	4	2		18,3

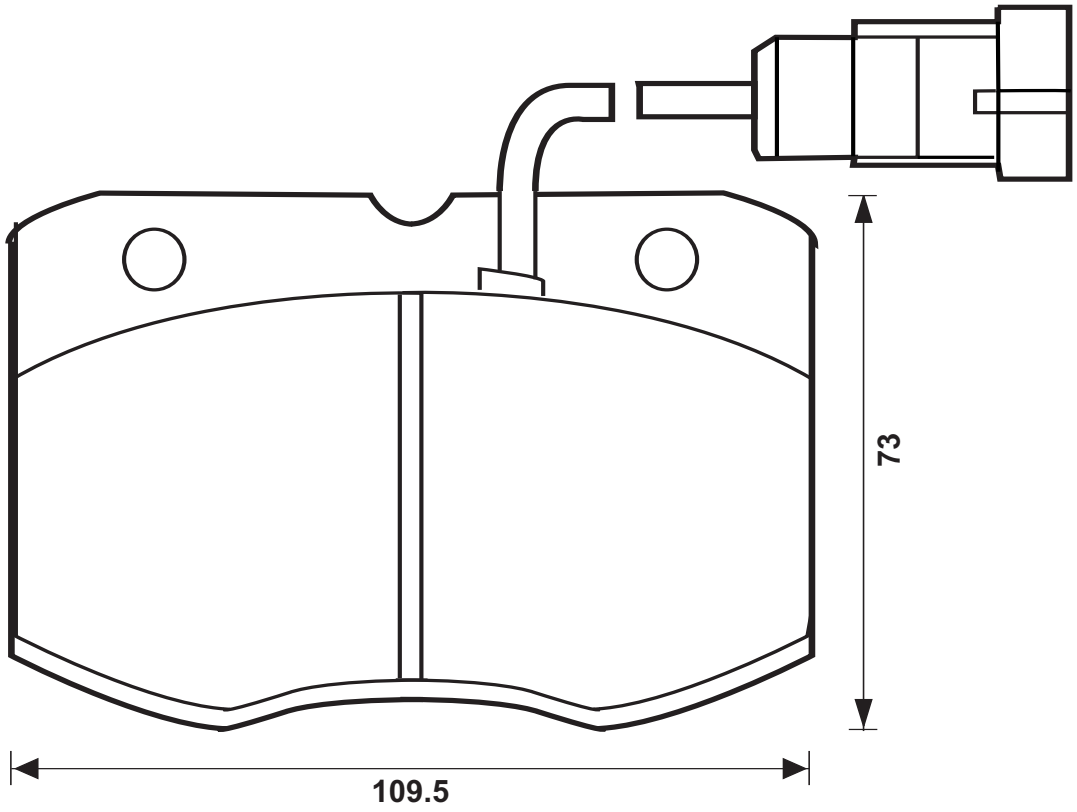

Iveco	Daily		p 84, 86

	WVA	#		A	B
573107	23613	4			18

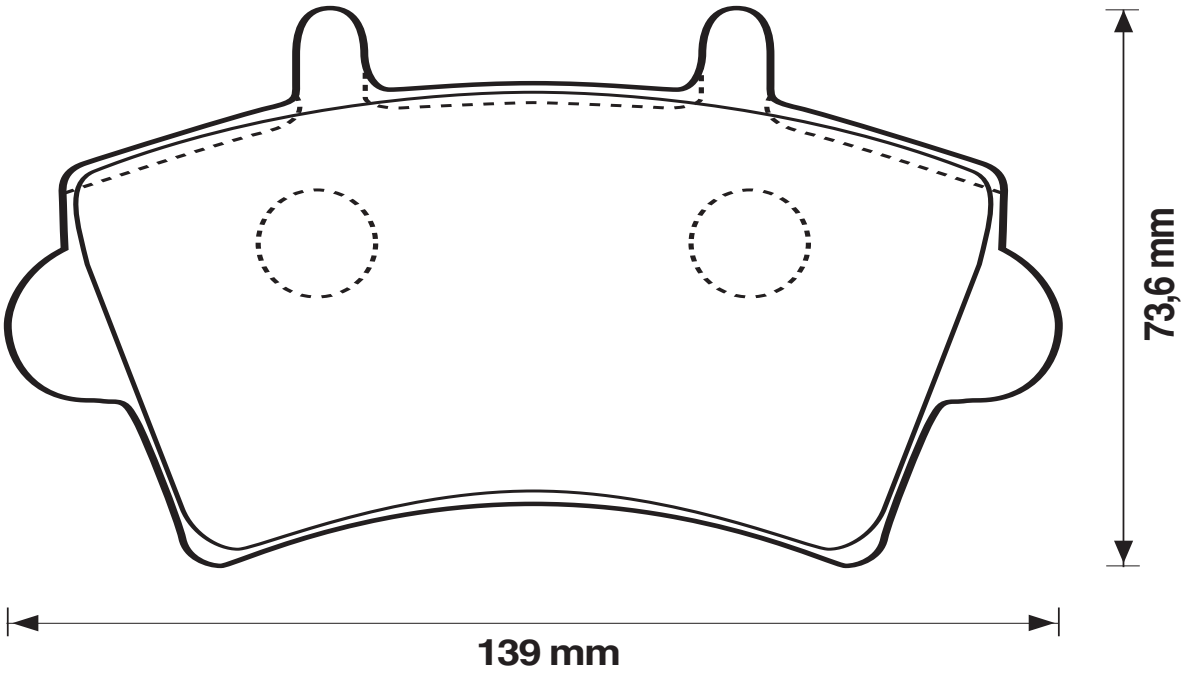

Opel	Movano		p 312
Renault	Master		p 330
Vauxhall	Movano		p 411

JURID / All rights reserved 2005

573108

4 2 17

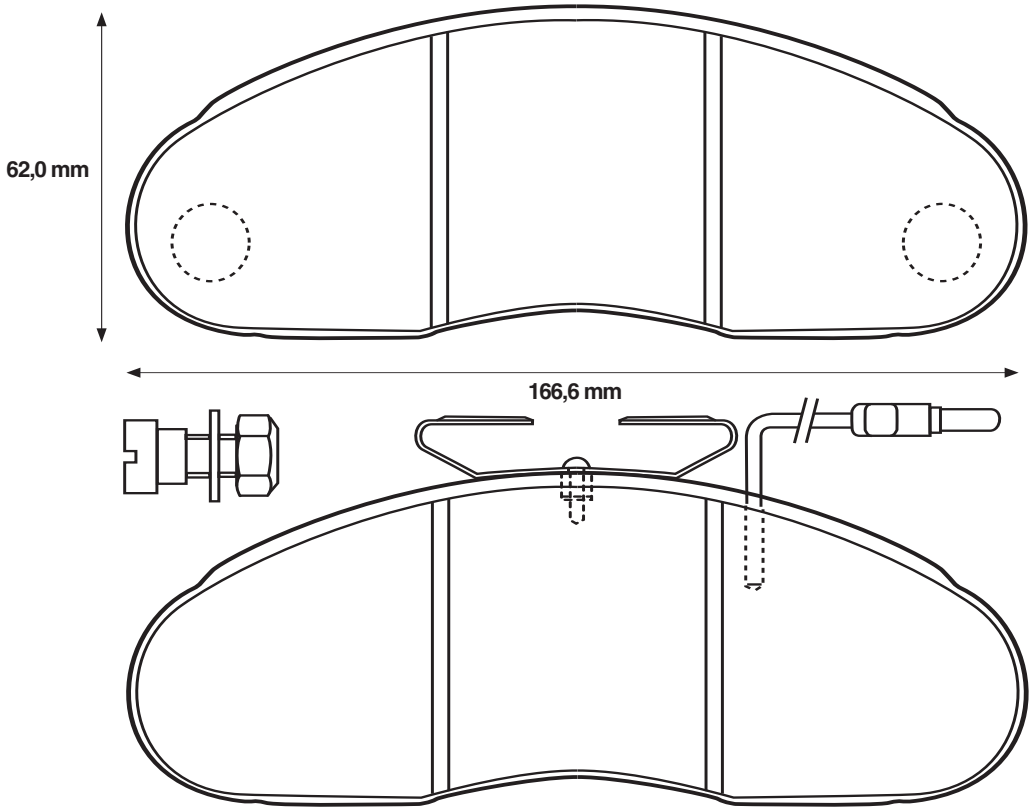

Mercedes Benz MB130 p 196

573110

4 18,4

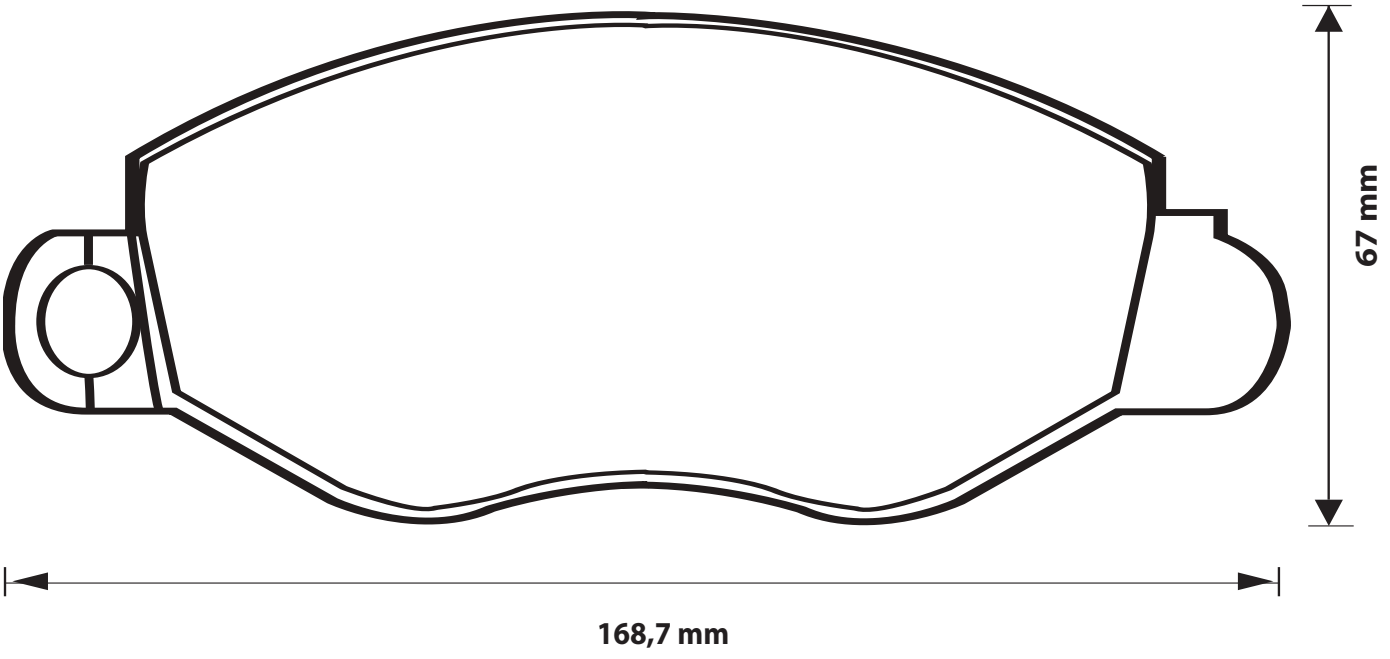

Ford Transit p 68

JURID by Honeywell
JURID / All rights reserved 2005

	WVA	#		A	B
573113		4	1		19,3

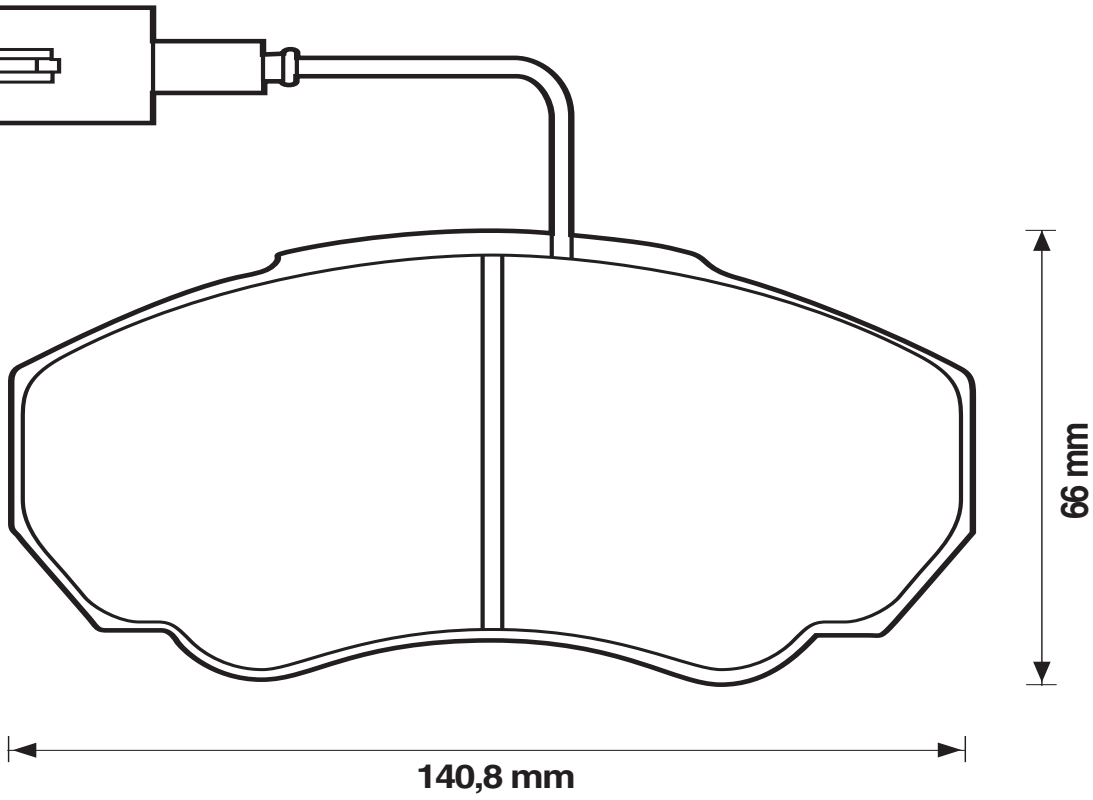

Citroen		Jumper	p 26
Iveco (Fiat)		Ducato	p 112
Peugeot		Boxer	p 326

	WVA	#		A	B
573114		4	1		19,3

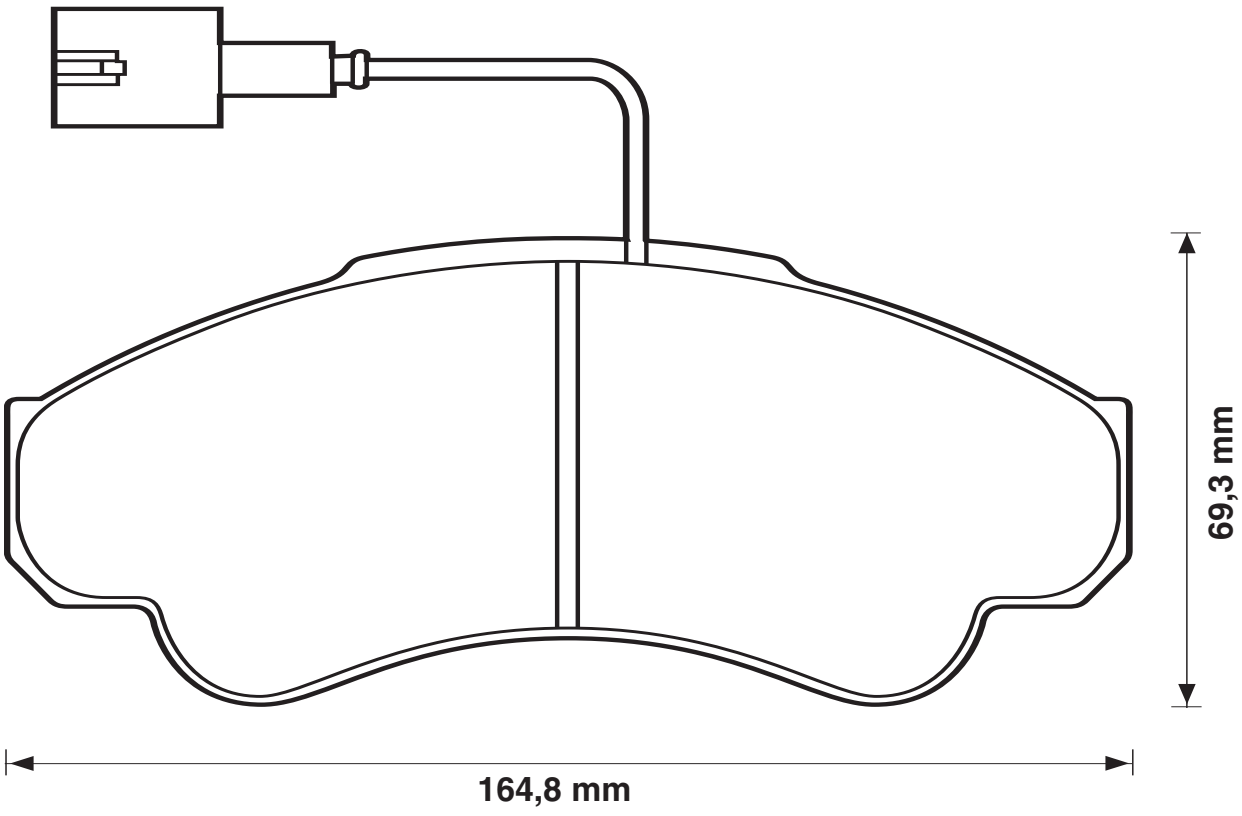

Citroen		Jumper	p 26
Iveco (Fiat)		Ducato	p 112
Peugeot		Boxer	p 326

JURID / All rights reserved 2005

JURID by Honeywell

WVA #

A B

573115

4

20,3

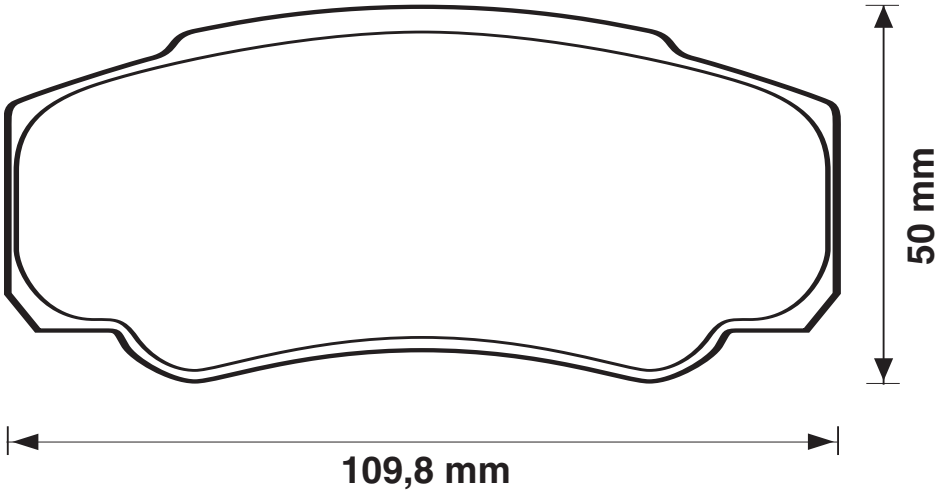

Citroen		Jumper	p 26
Iveco (Fiat)		Ducato	p 112
Peugeot		Boxer	p 326

577008J

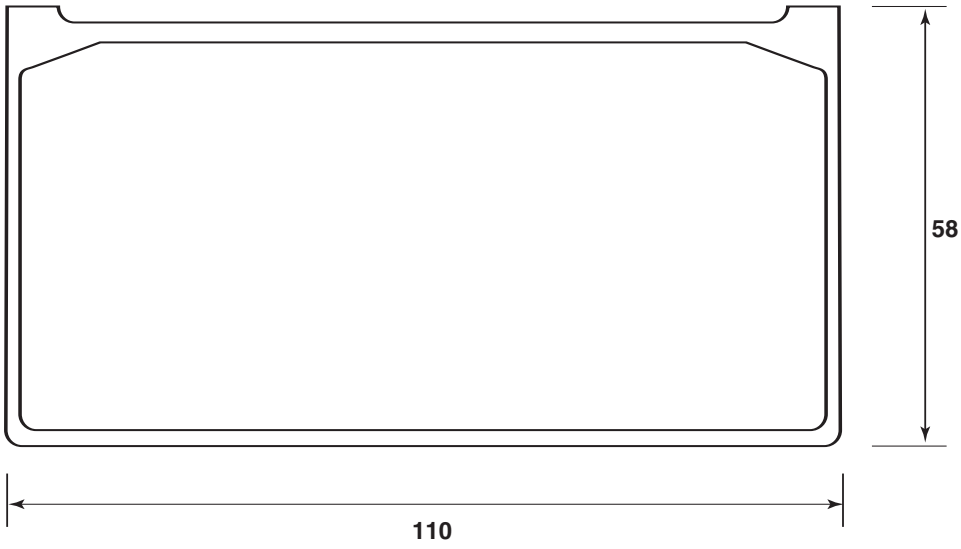

Renault Trucks (Renault VI)		p 363

JURID by Honeywell

© JURID / All rights reserved 2005



WVA #

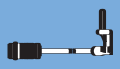

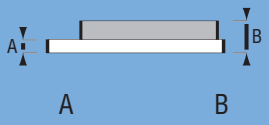

JURID / All rights reserved 2005



WVA #

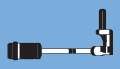

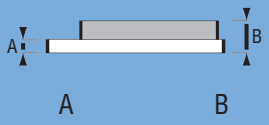

JURID / All rights reserved 2005



WVA #

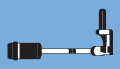

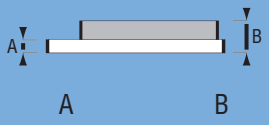

JURID / All rights reserved 2005



WVA #

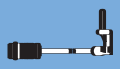

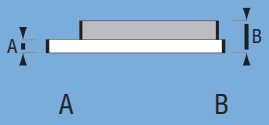

JURID / All rights reserved 2005



JURID / All rights reserved 2005

JURID / All rights reserved 2005

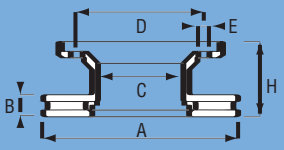

		A	B	B min	H	C	D	E1	E2	E3
561099J		280	14	12,6	55,5	112	138	5xM10x1.5		

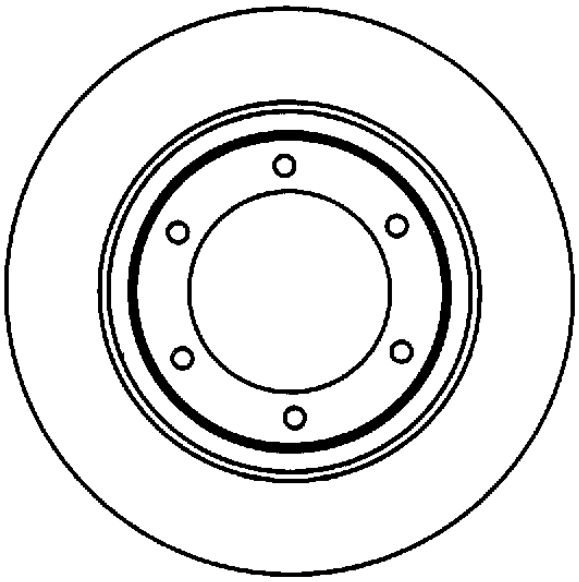

Peugeot		J7	p 328
		J9	p 328

		A	B	B min	H	C	D	E1	E2	E3
561121J		270	14,3	12	71,2	78,5	100	5xM10x1.5		

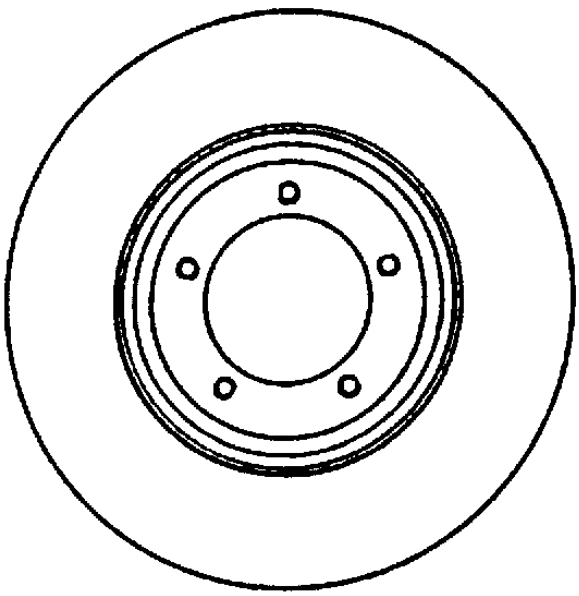

Ford		Transit	p 66, 68

JURID / All rights reserved 2005

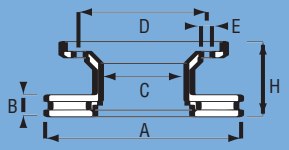

		A	B	B min	H	C	D	E1	E2	E3
561127J		267	14,2	12,8	111,4	58	170	6xM18x1.5	6x12.6	3xM6

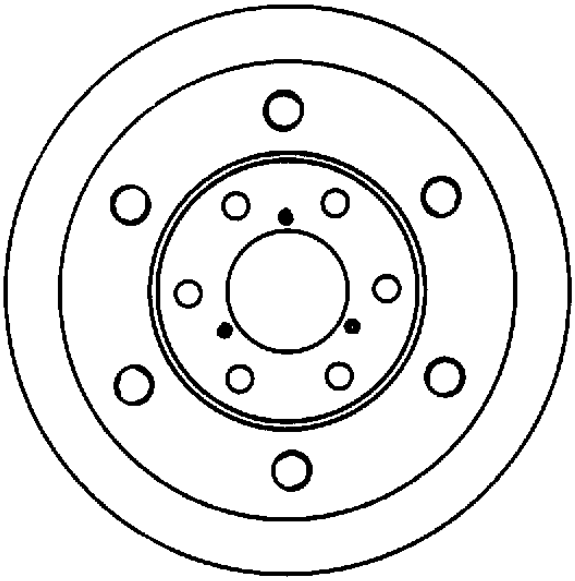

Iveco	Daily	p 84, 86	

		A	B	B min	H	C	D	E1	E2	E3
561135J		280	16	13	78,7	88	112	5x18	5x12,5	

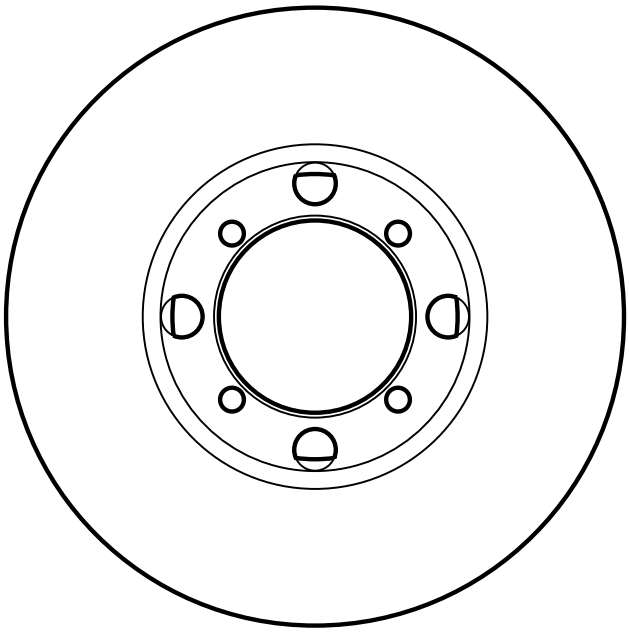

Mercedes Benz	T 1	p 198	
Mercedes Benz / Evobus	minibus	p 290	

JURID / All rights reserved 2005





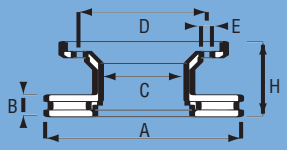

	A	B	B min	H	C	D	E1	E2	E3
561159J	256	13	11	61	72	118	5x15	2x8.7	3xM10x1.25

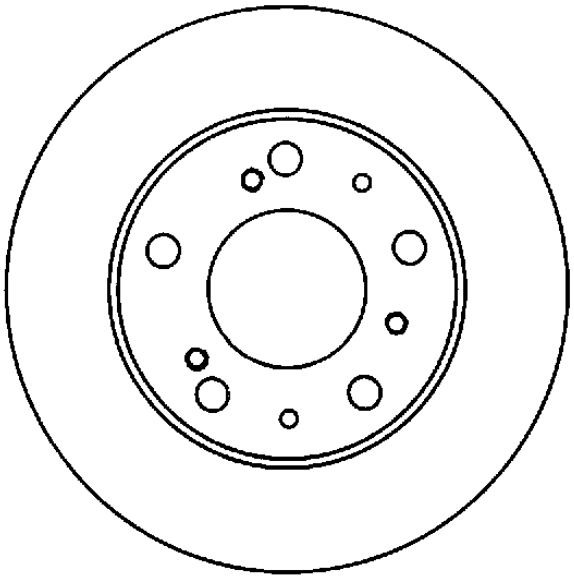

Citroen	C 25	p 24
Peugeot	J5	p 328

	A	B	B min	H	C	D	E1
561171J	252	24	22	53,5	76	95	6xM10

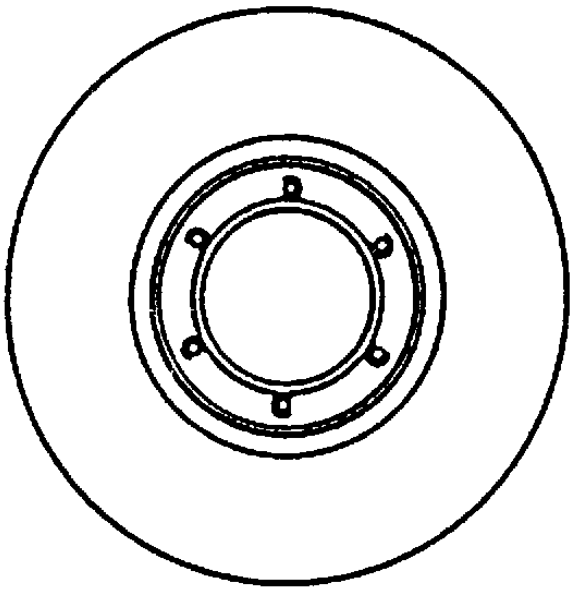

Renault	Trafic	p 332

JURID / All rights reserved 2005





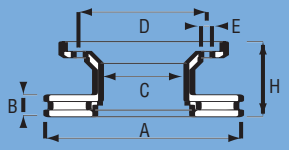

		A	B	B min	H	C	D	E1	E2	E3
561222		252	20	18	29	81	103	6x10.7		

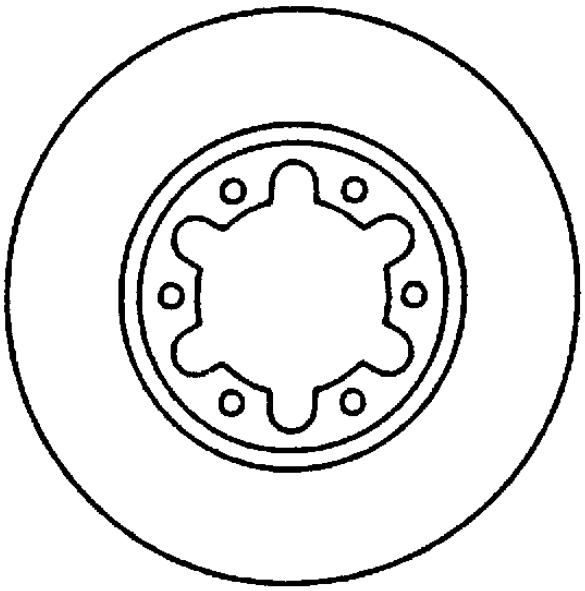

Nissan (Ebro)		Cabstar	p 304

		A	B	B min	H	C	D	E1	E2	E3
561252J		278	13	11	119	67,5	112	5xM14x1.5	1xM5x0.8	

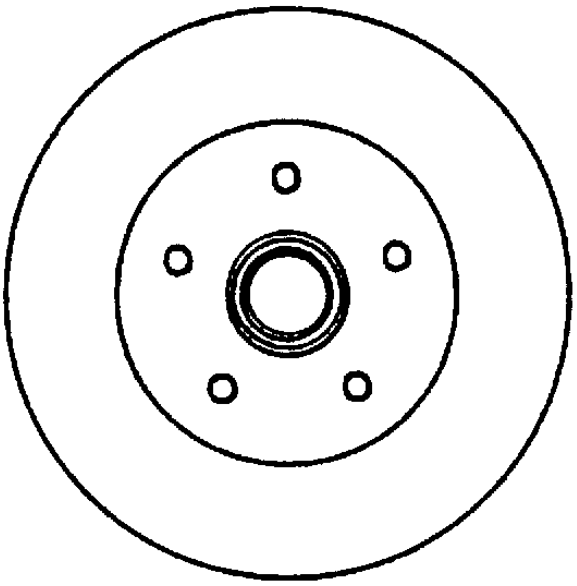

Volkswagen		Transporter/Bus	p 416, 418

JURID / All rights reserved 2005





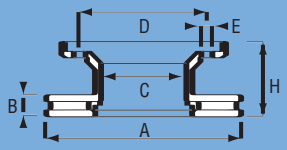

		A	B	B min	H	C	D	E1	E2	E3
561254J		278	24	22	70	95	120	6xM12x1.75		

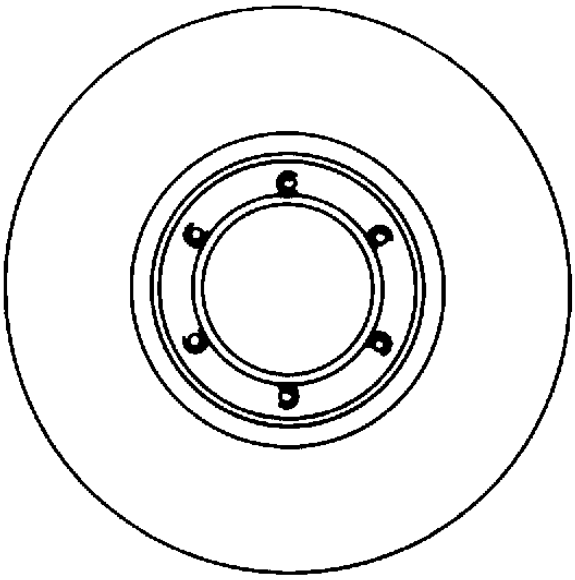

Renault Master p 330

		A	B	B min	H	C	D	E1	E2	E3
561282J		270	24	22,6	71,2	78,6	100	5xM10x1.5		

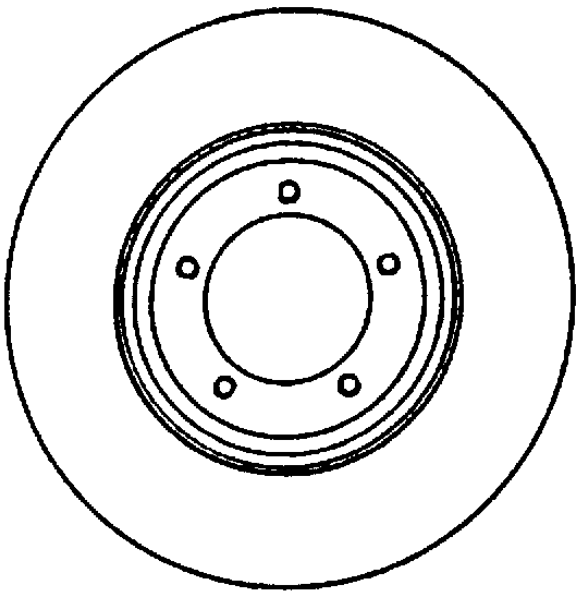

Ford Transit p 68

JURID / All rights reserved 2005





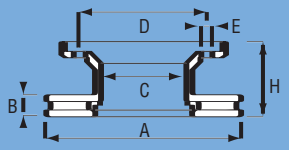

	A	B	B min	H	C	D	E1	E2	E3
561308J	281	20	18	80,5	91	129	5		

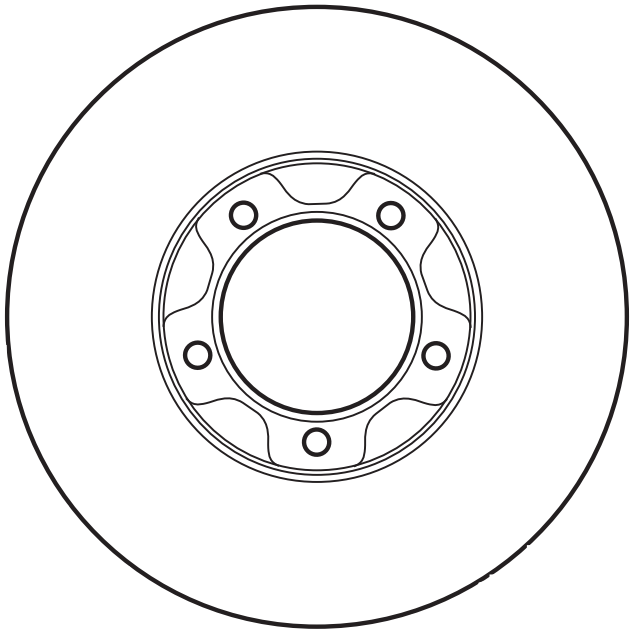

Volkswagen	LT	p 414

561321J	256	16	14,8	64	73	118	5x15	2x8.5	3xM10x1.25

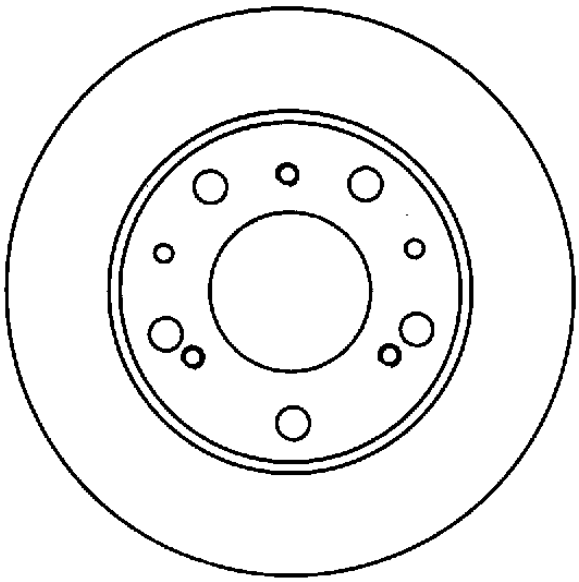

Citroen	C 25	p 24
Iveco (Fiat)	Ducato	p 112
Peugeot	J5	p 328

JURID by Honeywell

© JURID / All rights reserved 2005

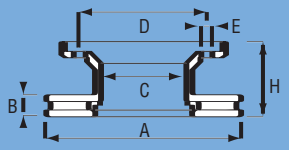

	A	B	B min	H	C	D	E1	E2	E3
561339J	290	16	14,8	61	73	118	5x15	2x8.5	3xM10x1.25

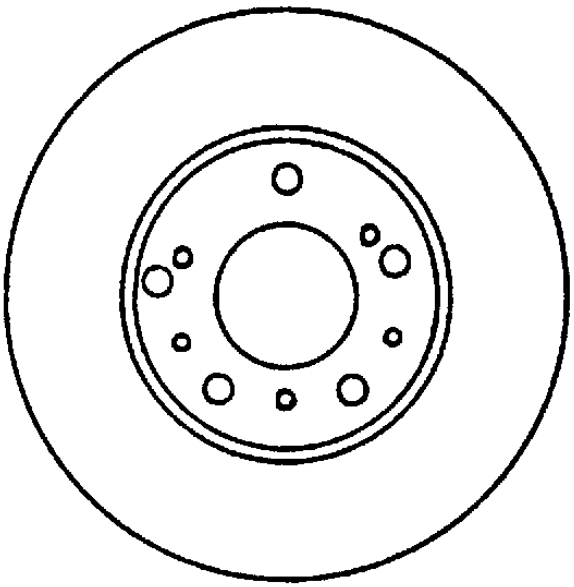

Citroen	C 25	p 24
Iveco (Fiat)	Ducato	p 112
Peugeot	J5	p 328

	A	B	B min	H	C	D	E1	E2	E3
561350B	276	14,4	12,8	53,3	82,7	104,8	5x10.25/25		

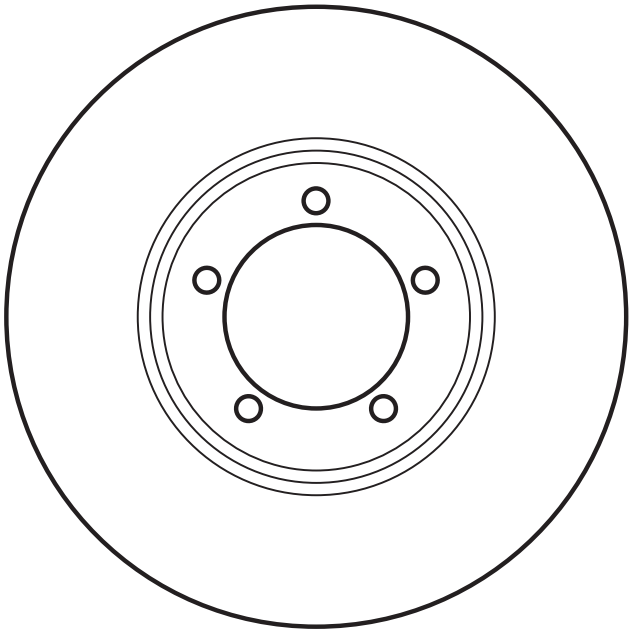

Leyland / DAF	Sherpa	p 142

JURID / All rights reserved 2005





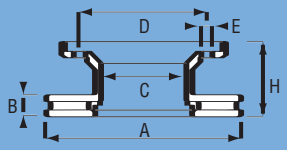

		A	B	B min	H	C	D	E1	E2	E3
561360J		280	16	14,8	142,5	58	170	6xM18x1.5	6x12.5	3xM6

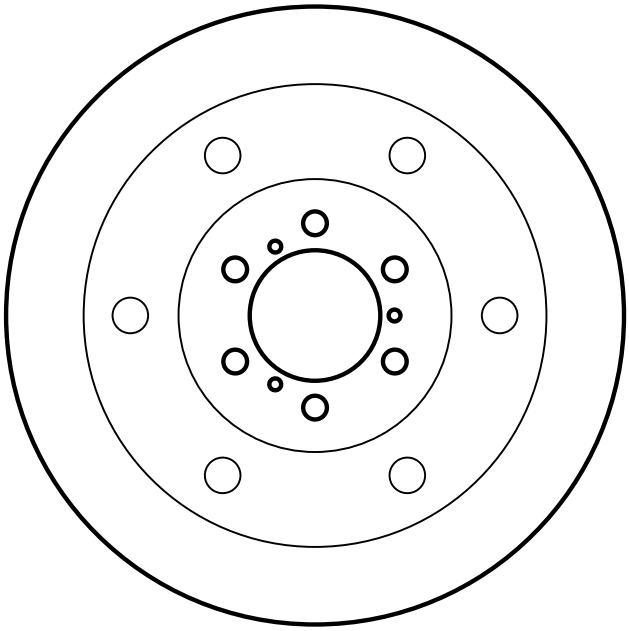

Iveco		Daily	p 86

		A	B	B min	H	C	D	E1	E2	E3
561378J		254	14,3	12,9	31,4	78,6	100	5xM10x1.5		

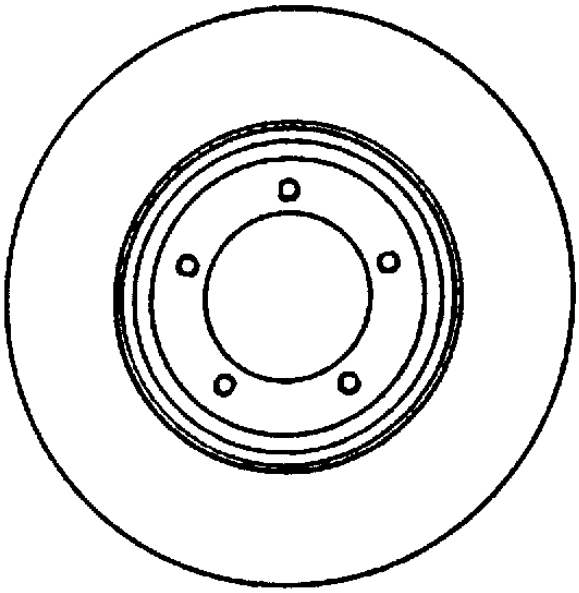

Ford		Transit	p 68

JURID / All rights reserved 2005





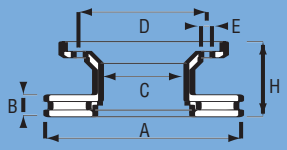

		A	B	B min	H	C	D	E1	E2	E3
561437J		258	16	13	95	45,2	112	5xM14x1.5		

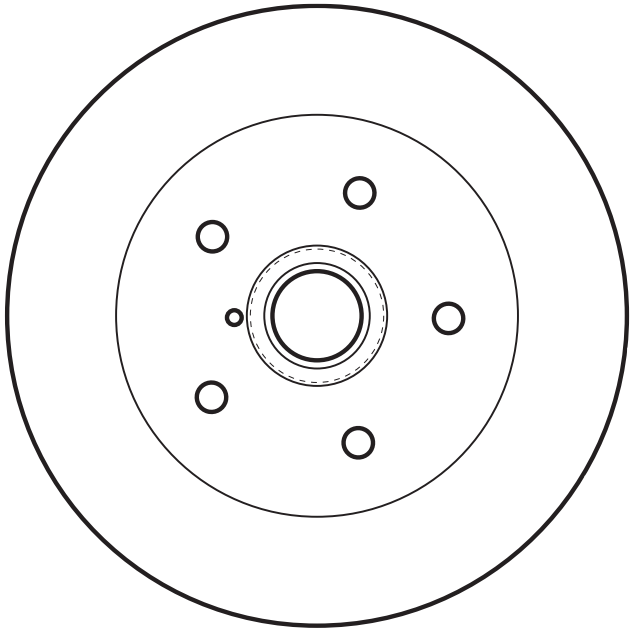

Volkswagen Transporter/Bus p 416

		A	B	B min	H	C	D	E1	E2	E3
561493J		258	15	13	57	67	112	5x15.5	1x10/18	

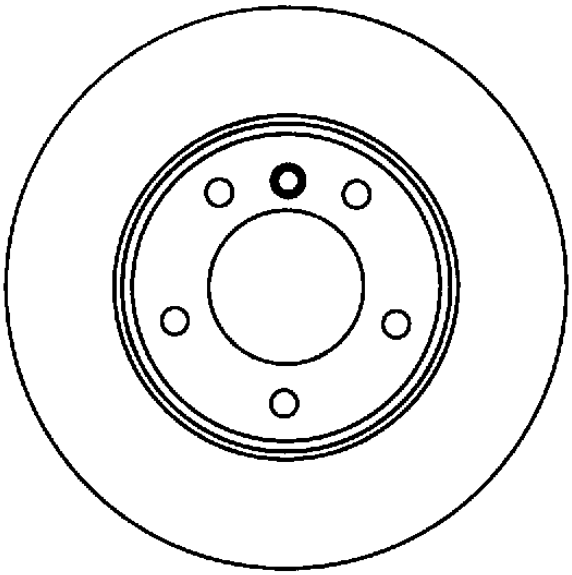

Volkswagen Transporter/Bus p 416

JURID / All rights reserved 2005

JURID by Honeywell





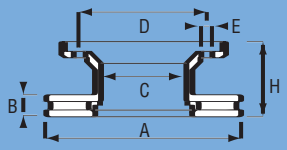

	A	B	B min	H	C	D	E1	E2	E3
561504B	275	24	22	63	82,6	104,77	5x10		

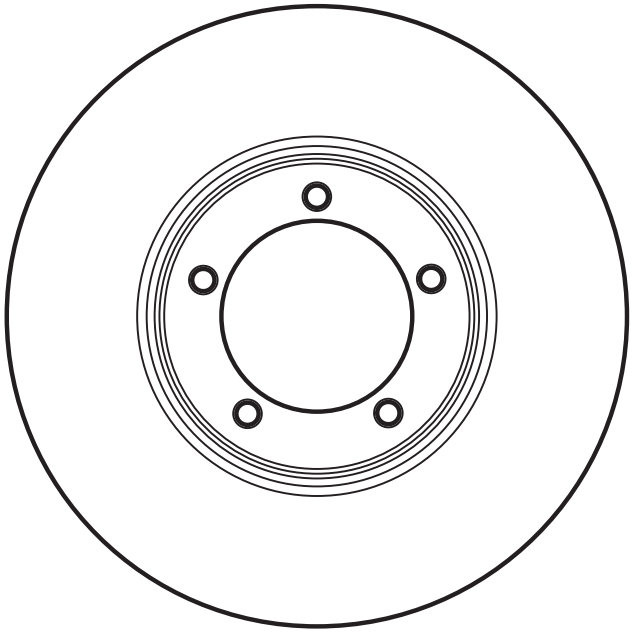

Leyland / DAF		Sherpa	p 142

	A	B	B min	H	C	D	E1	E2	E3
561577J	238,5	16	14	79	102	140	5x17		

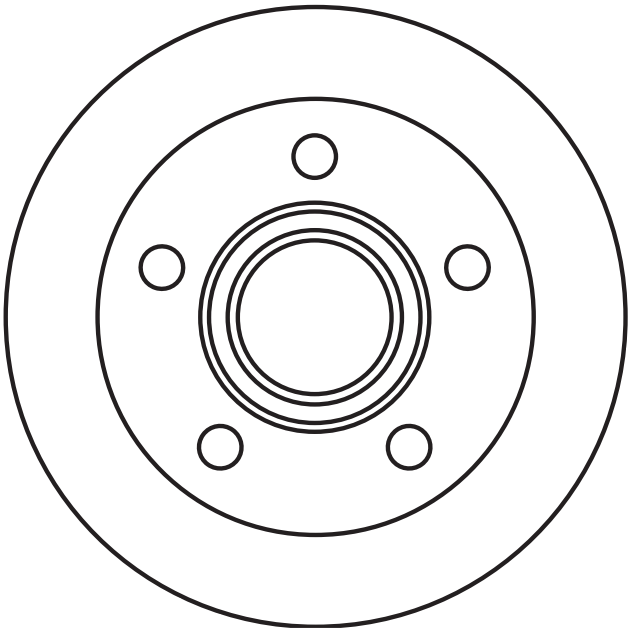

Mercedes Benz		MB130	p 196
		MB	p 196
		MB	p 276

JURID / All rights reserved 2005





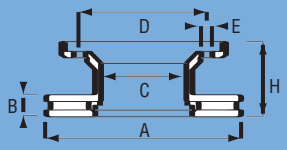

	A	B	B min	H	C	D	E1	E2	E3
561609J	260	16	13	64,5	68,1	112	5x16.5	1x14/19.5	

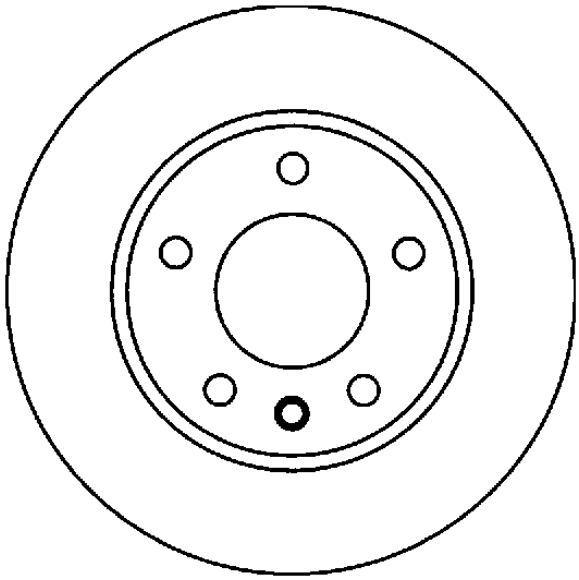

Volkswagen

Transporter/Bus p 416

	A	B	B min	H	C	D	E1	E2	E3
561610J	280	24	20	64,7	68,1	112	5x16.5	1x14/19.5	

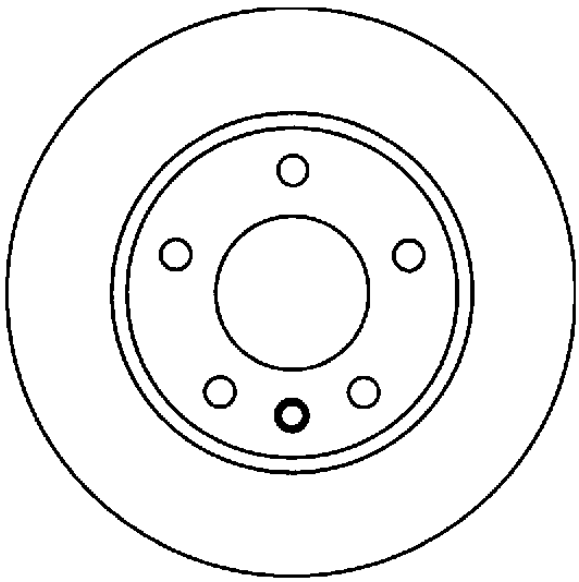

Volkswagen

Transporter (T4) Caravelle p 416
Transporter Van (T4) p 416
Transporter/Bus p 416

JURID / All rights reserved 2005





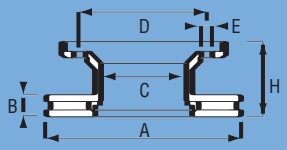

	A	B	B min	H	C	D	E1	E2	E3
561612J	267	14,2	12,8	154	58	170	6xM18x1.5	6x12.5	3xM6x1

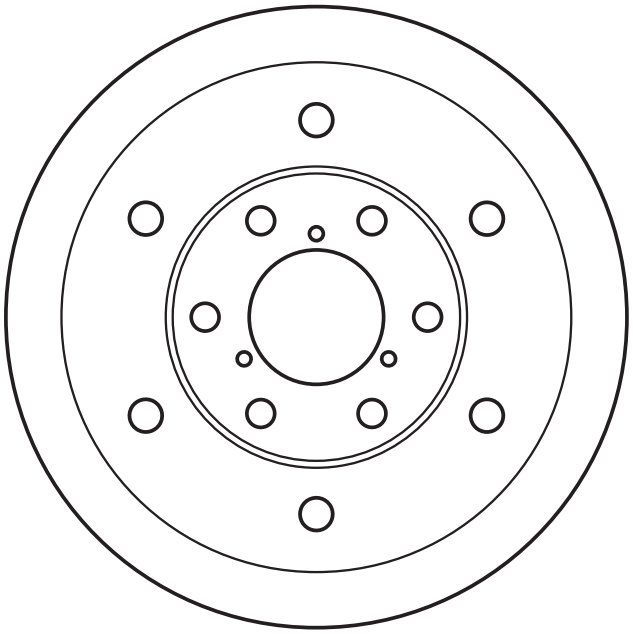

Iveco

Daily	p 84

	A	B	B min	H	C	D	E1	E2	E3
561624J	254	24,5	22,2	43	78,5	100	5xM10x1.5		

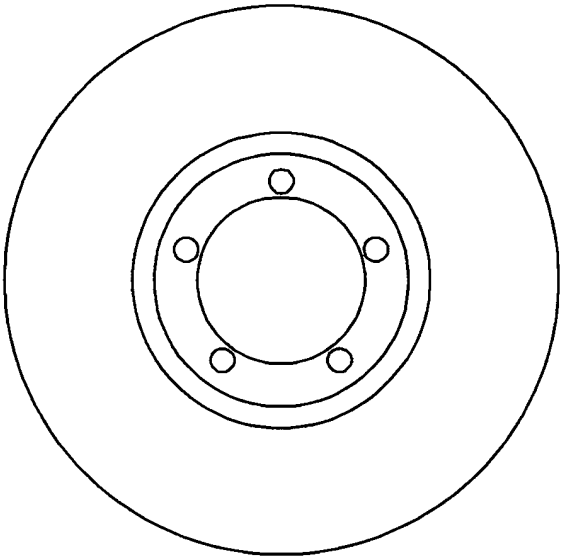

Ford

Tourneo	p 66
Transit	p 68

JURID / All rights reserved 2005





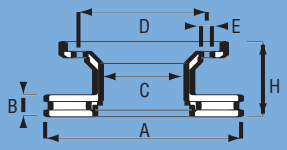

	A	B	B min	H	C	D	E1	E2	E3
561625J	270	24,5	22,2	43	78,5	100	5xM10x1.5		

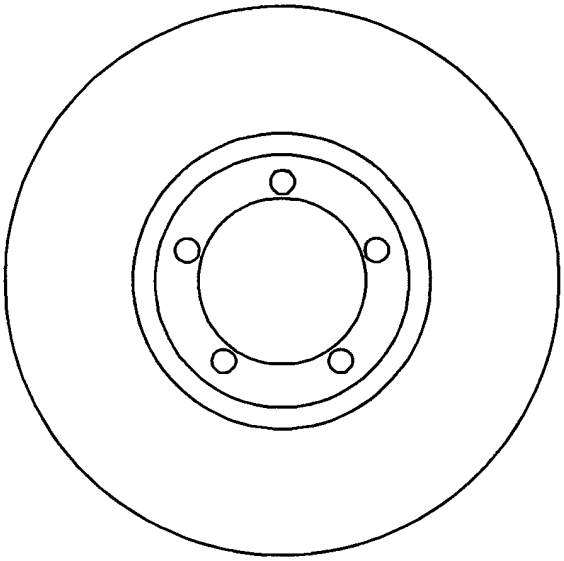

Ford

Tourneo	p 66	
Transit	p 68	

	A	B	B min	H	C	D	E1	E2	E3
561639J	304	30	26	91	118	140	6xM12x1.5		

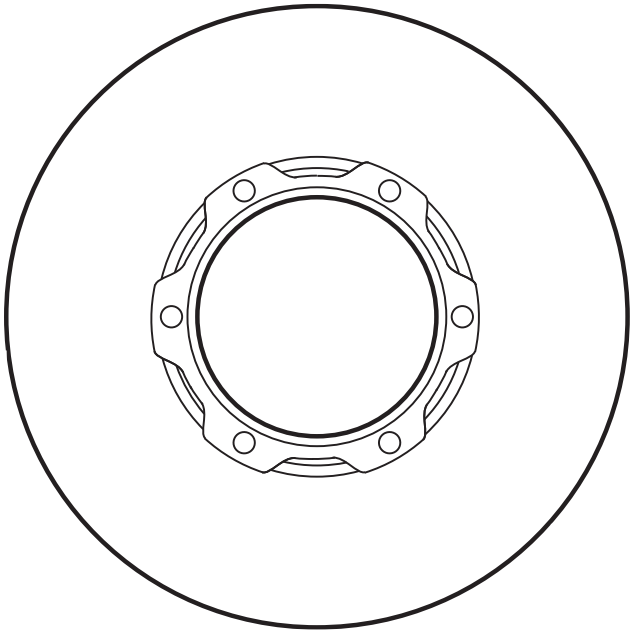

Mercedes Benz

T 2	p 272	

Mercedes Benz / Evobus

O409	p 284	
O609	p 286	

JURID / All rights reserved 2005

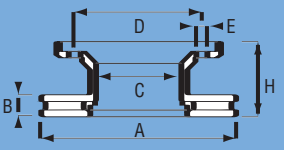

		A	B	B min	H	C	D	E1	E2	E3
561708		263	24	22	53	96	118	5xM12		

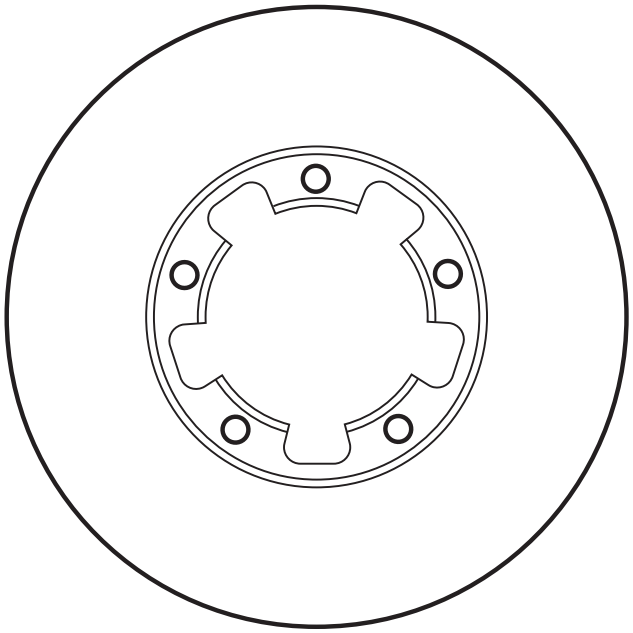

Nissan (Ebro)		Cabstar	p 304
		Trade	p 306

		A	B	B min	H	C	D	E1	E2	E3
561754J		324	30	26	91	118	140	6xM12x1.5		

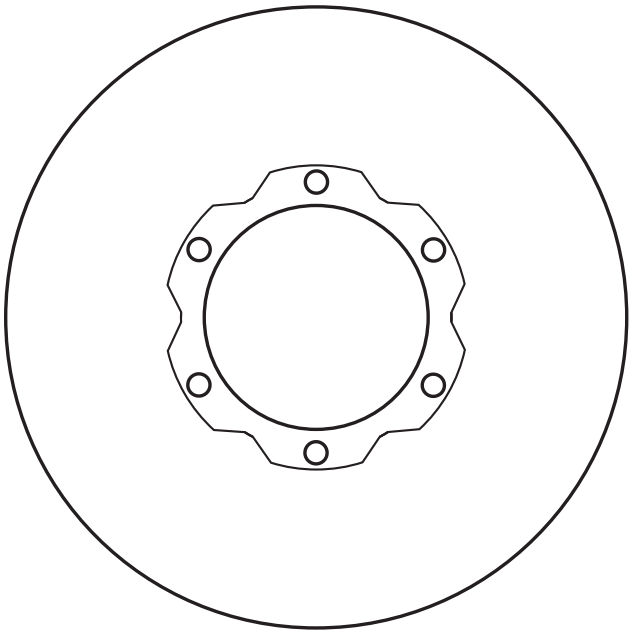

Mercedes Benz		T 2	p 272
Mercedes Benz / Evobus		O409	p 284
		O611	p 286
		O614	p 286
Optare			p 312

JURID by Honeywell

© JURID / All rights reserved 2005





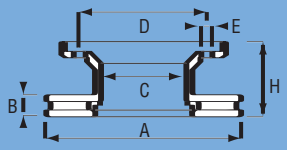

		A	B	B min	H	C	D	E1	E2	E3
561854J		280	22	19	79	88	112	5x12.5	5x18	

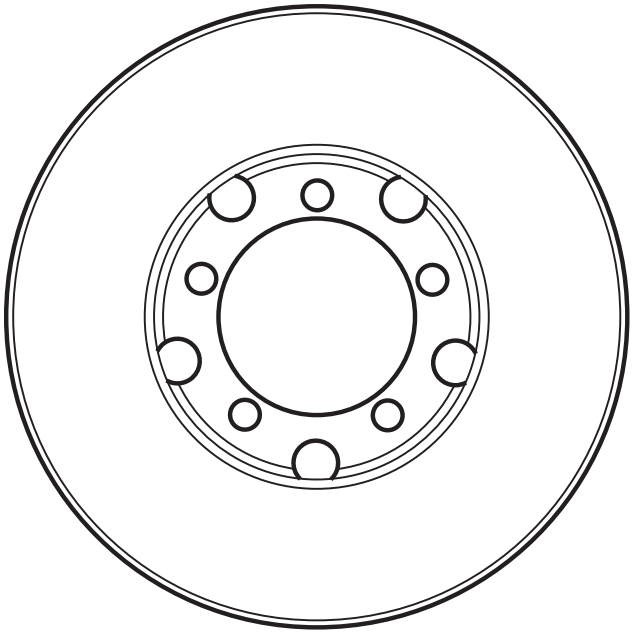

Mercedes Benz T 1 p 198

		A	B	B min	H	C	D	E1	E2	E3
561857J		282	18	15	64,5	68,2	112	5x16.5	1x14/20	

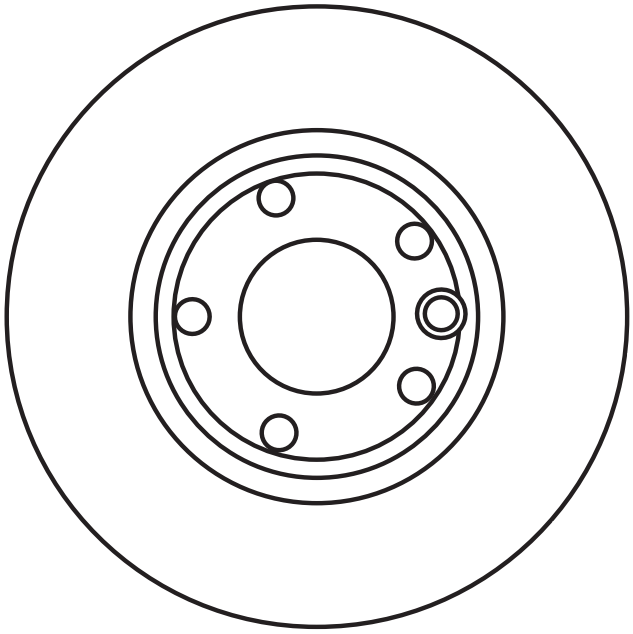

Volkswagen Transporter/Bus p 416

JURID / All rights reserved 2005





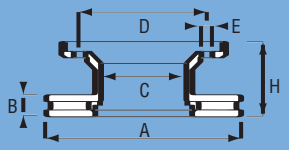

	A	B	B min	H	C	D	E1	E2	E3
561919J	322	30	28	90	132	154	6xM14x2		

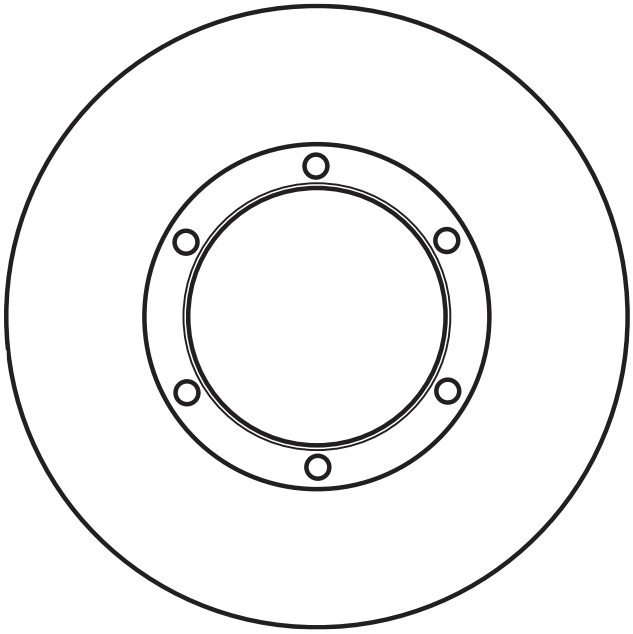

Volvo	FL4	p 430	
	FL6	p 430	

	A	B	B min	H	C	D	E1	E2	E3
561920J	322	30	28	90	132	154	8xM14x2		

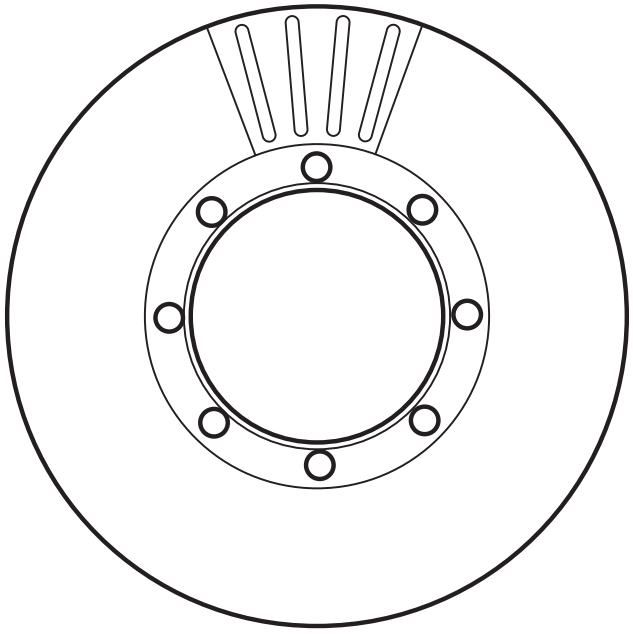

Volvo	FL6	p 430	

JURID by Honeywell

© JURID / All rights reserved 2005

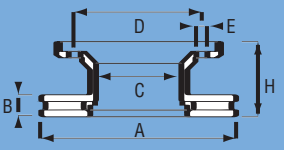

		A	B	B min	H	C	D	E1	E2	E3
561969J		300	24	22	65	80	130	5x18	2x9	

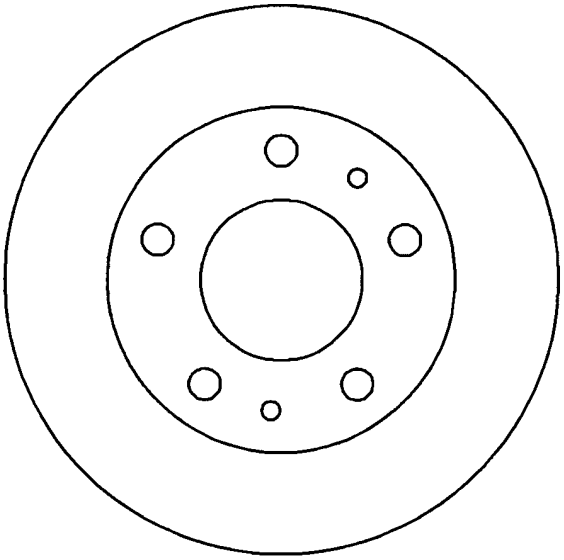

Citroen		Jumper	p 26
Iveco (Fiat)		Ducato	p 112
Peugeot		Boxer	p 326

		A	B	B min	H	C	D	E1	E2	E3
561984J		280	24	22	65,5	73	118	5x15.8	2x8.7	

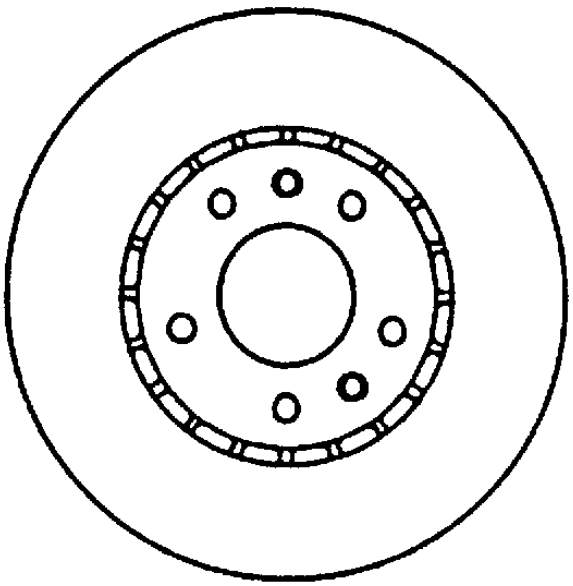

Citroen		Jumper	p 26
Iveco (Fiat)		Ducato	p 112
Peugeot		Boxer	p 326

JURID / All rights reserved 2005

JURID by Honeywell

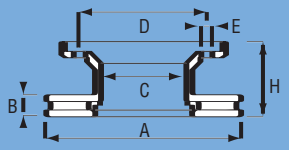

		A	B	B min	H	C	D	E1	E2	E3
561992J		280	18	16	66,5	73	118	5x15.8	2x8.7	

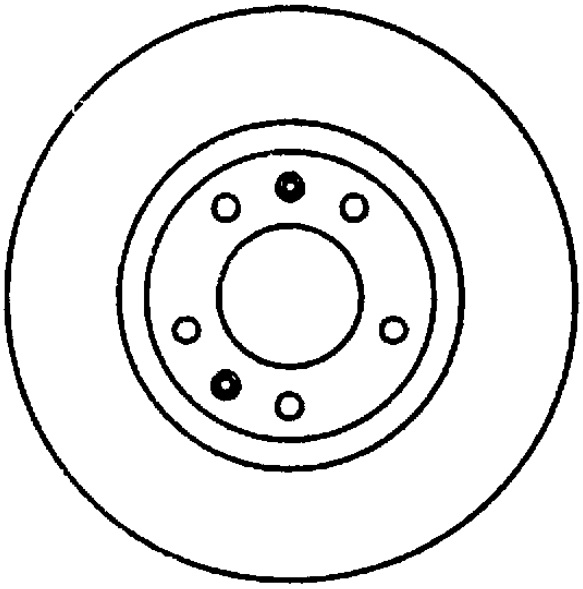

Citroen		Jumper	p 26
Iveco (Fiat)		Ducato	p 112
Peugeot		Boxer	p 326

		A	B	B min	H	C	D	E1	E2	E3
561998B		263	24	22	22	96	118	6xM12x1.5		

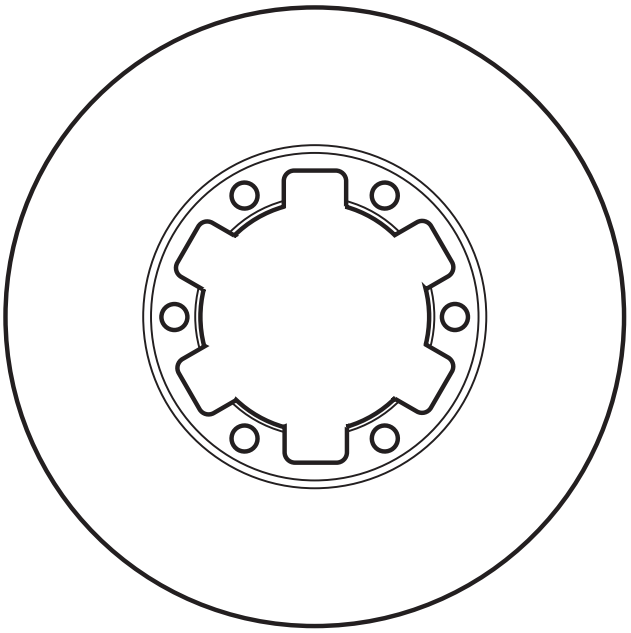

Nissan (Ebro)		EcoT	p 304
		F275	p 304
		F350	p 304
		L35 / L45	p 306
		Trade	p 306
		Atleon	p 306

JURID / All rights reserved 2005

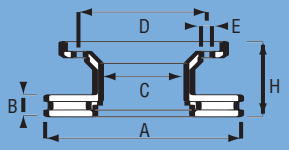

	A	B	B min	H	C	D	E1	E2	E3
562033J	257	20	18,2	40,5	59	98	5x16.5	1x12.75	

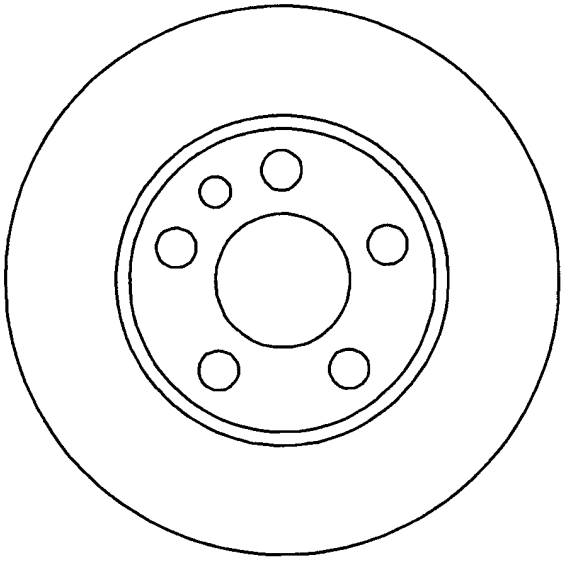

Citroen	Jumpy	p 26
Iveco (Fiat)	Scudo	p 114
Peugeot	Expert	p 326

	A	B	B min	H	C	D	E1	E2	E3
562054J	276	22	20	60	67	112	5x15	1x9/18	

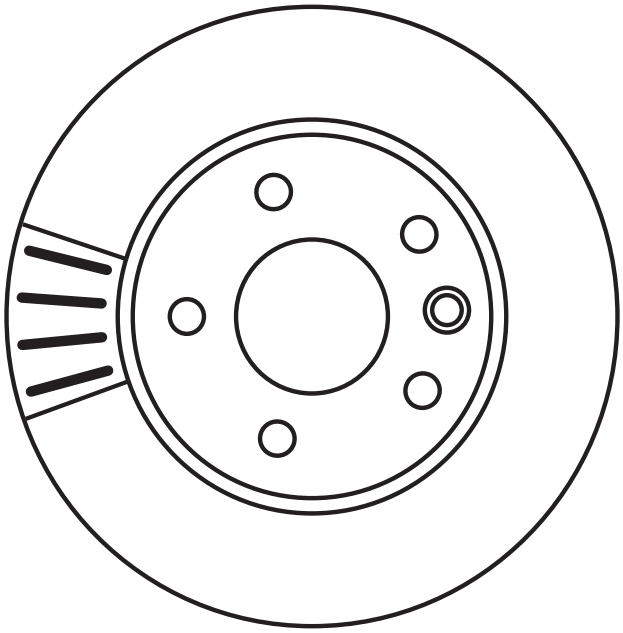

Mercedes Benz	Vito	p 200

JURID / All rights reserved 2005





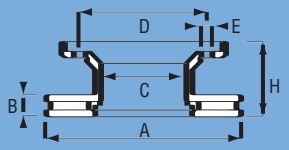

	A	B	B min	H	C	D	E1	E2	E3
562065J	280	10	8	65	67	112	5x15	1x9/18	

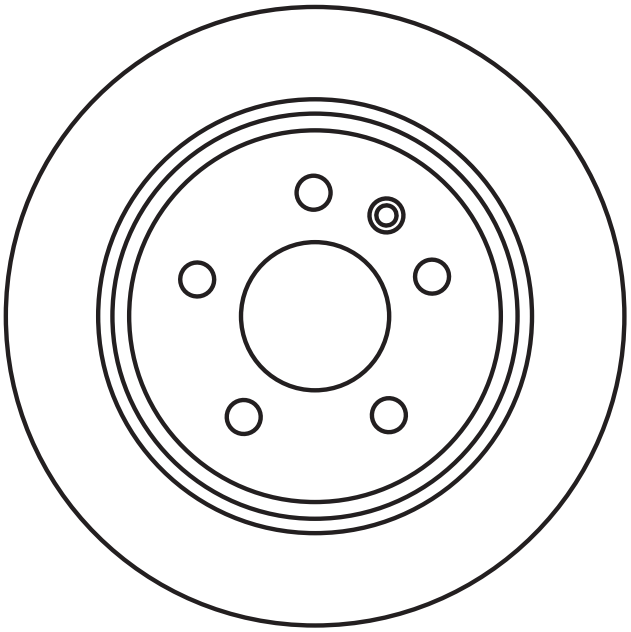

Mercedes Benz

Vito p 200

	A	B	B min	H	C	D	E1	E2	E3
562079	282	18	15	55,5	68	112	5x16.5	1x14/19.5	

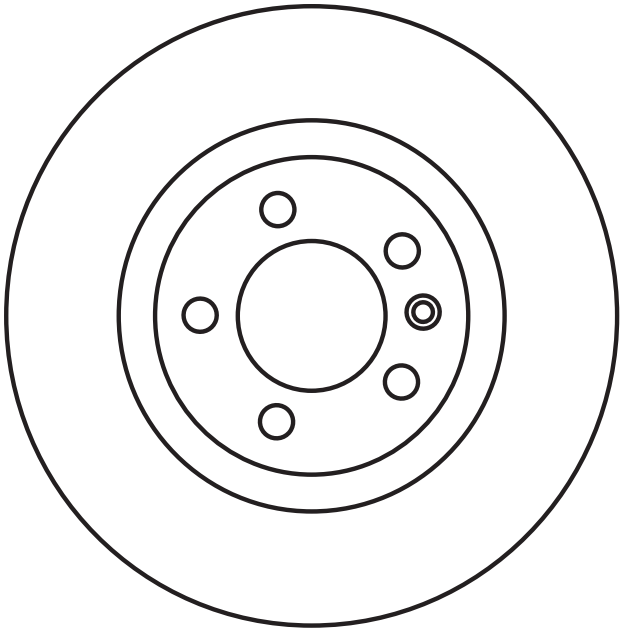

Volkswagen

Transporter (T4) Caravelle p 416

Transporter Van (T4) p 416

JURID / All rights reserved 2005





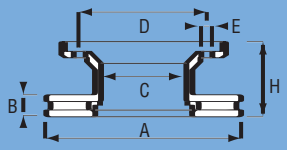

		A	B	B min	H	C	D	E1	E2	E3
562080		280	24	20	55,5	68	112	5x16.5	1x14/20	

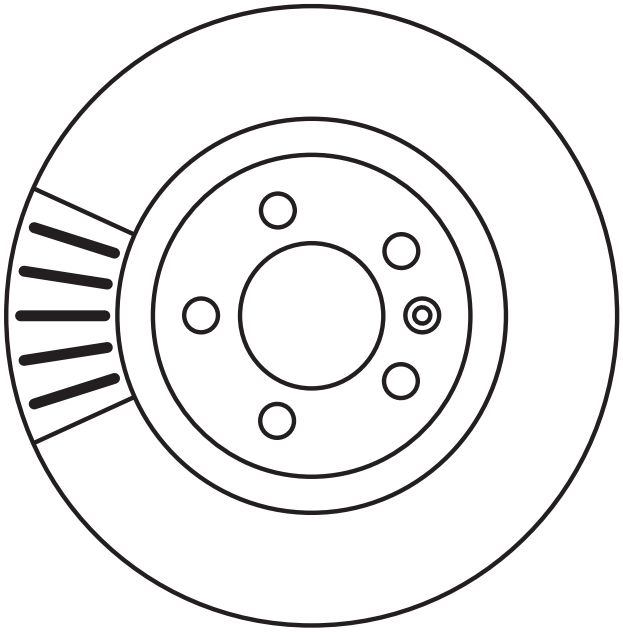

Volkswagen



Transporter (T4) Caravelle p 416



Transporter Van (T4) p 416

		A	B	B min	H	C	D	E1	E2	E3
562081J		280	12	10	40,5	68	112	5x16.5	1x14/19.5	

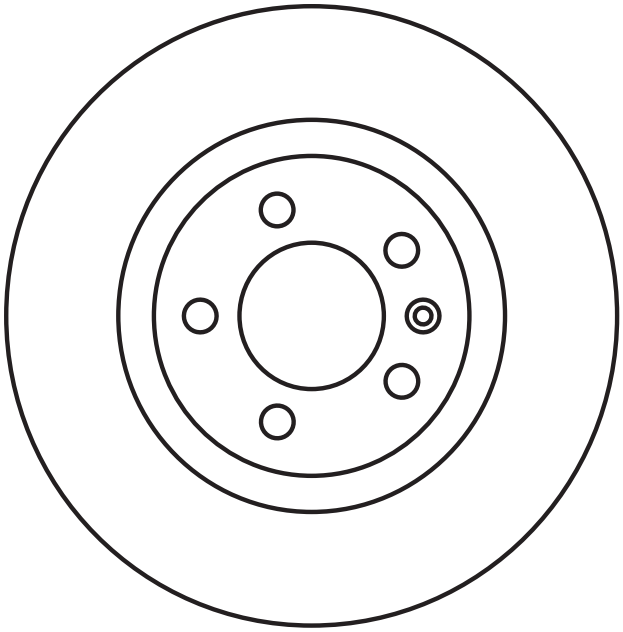

Volkswagen



Transporter Van (T4) p 416

JURID / All rights reserved 2005





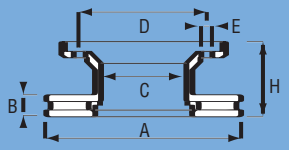

	A	B	B min	H	C	D	E1	E2	E3
562105	280	24	21	61,6	79,5	110	6xM10x1.5		

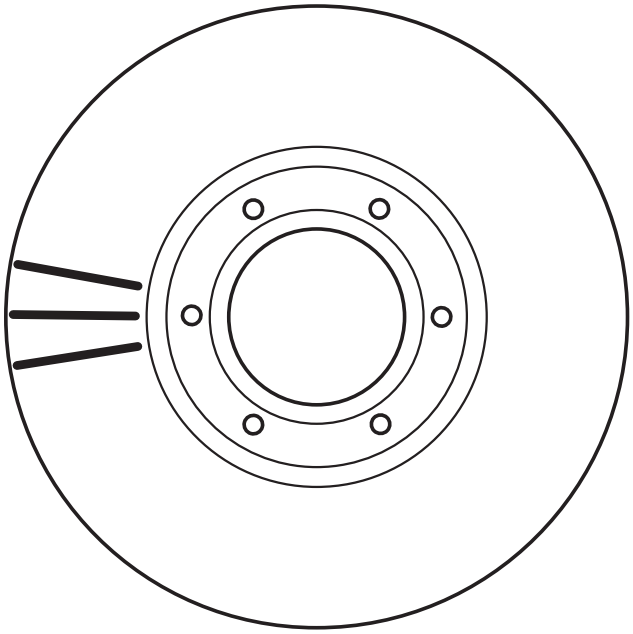

Opel	Movano	p 312
Renault	Master	p 330
Vauxhall	Movano	p 411

	A	B	B min	H	C	D	E1	E2	E3
562140	294	26	22	43	82	100	5xM10x1.5		

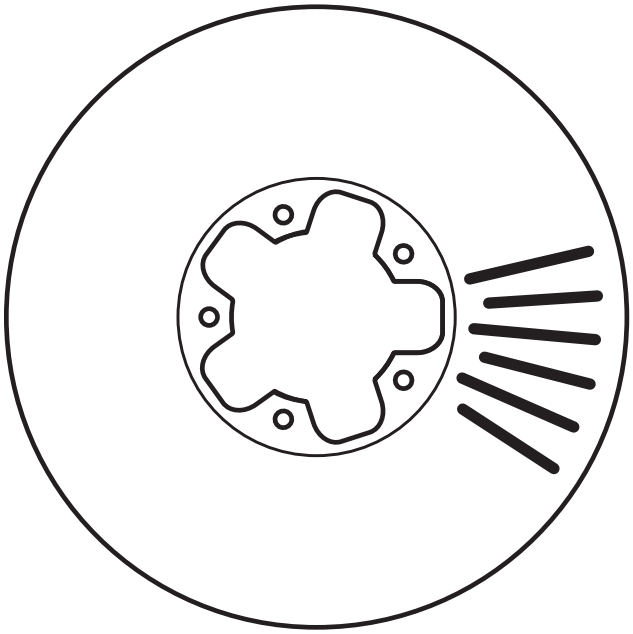

Ford	Transit	p 68

JURID / All rights reserved 2005





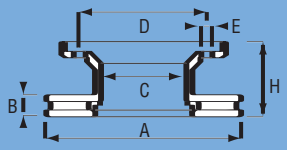

		A	B	B min	H	C	D	E1	E2	E3
562141		277	24	22	43	82	100	5xM10x1.5		

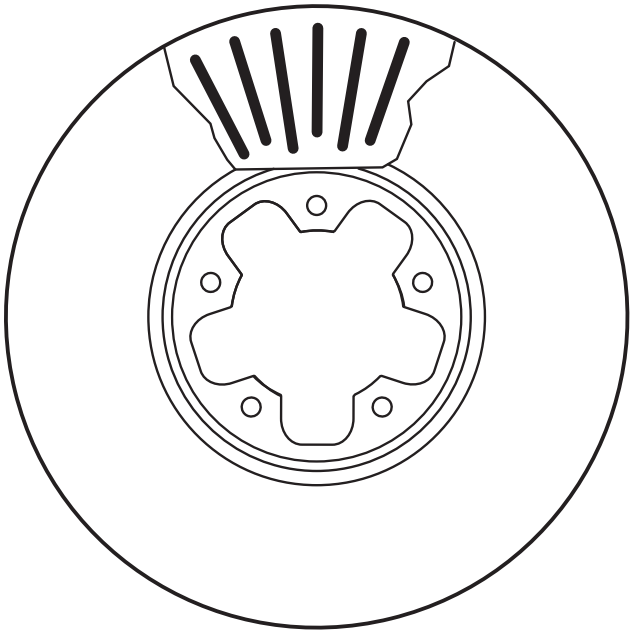

Ford  Transit p 68

		A	B	B min	H	C	D	E1	E2	E3
562164		305	12	10,5	67	90	130	5x15.5	1x9/17	

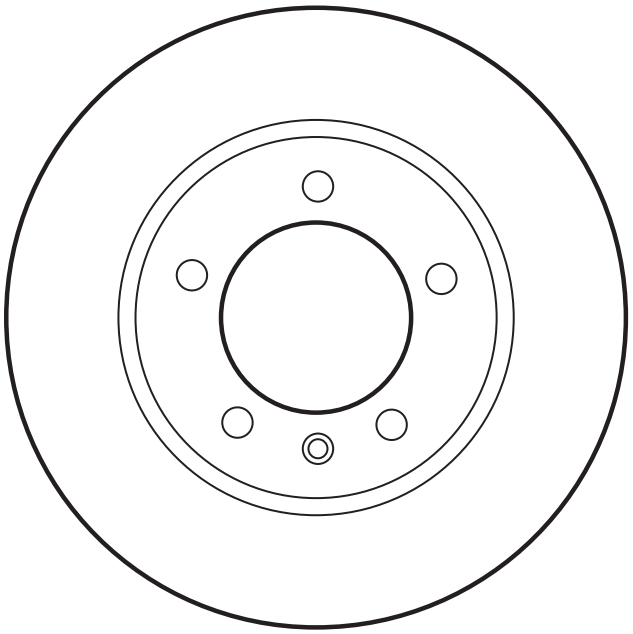

Renault  Master p 330

JURID / All rights reserved 2005

JURID by Honeywell





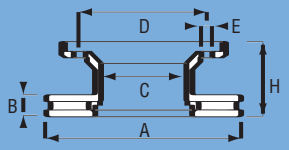

	A	B	B min	H	C	D	E1	E2	E3
562190	305	28	25	77,8	90	130	5x15.6	1x9/17	

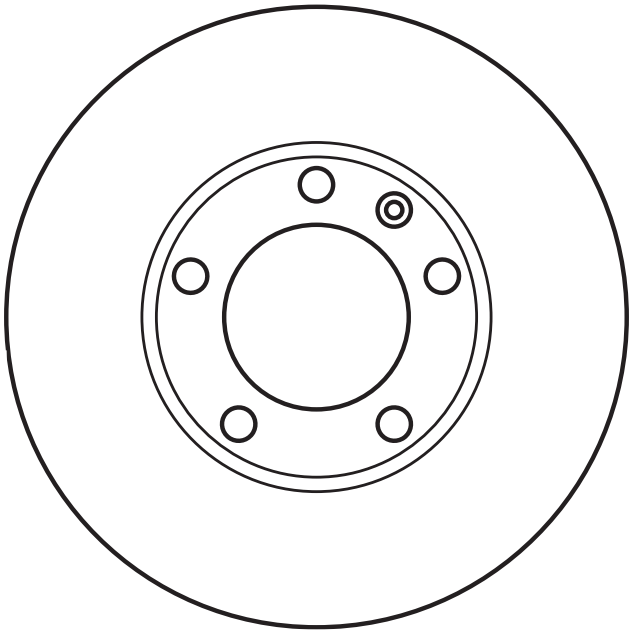

Opel	Movano Box	p 310, 312
	Movano Bus	p 312
	Movano	p 312
Renault	Master	p 330
Vauxhall	Movano	p 411

	A	B	B min	H	C	D	E1	E2	E3
562198	300	26	22	56	68	112	5x16.5	1x13.8/19.5	

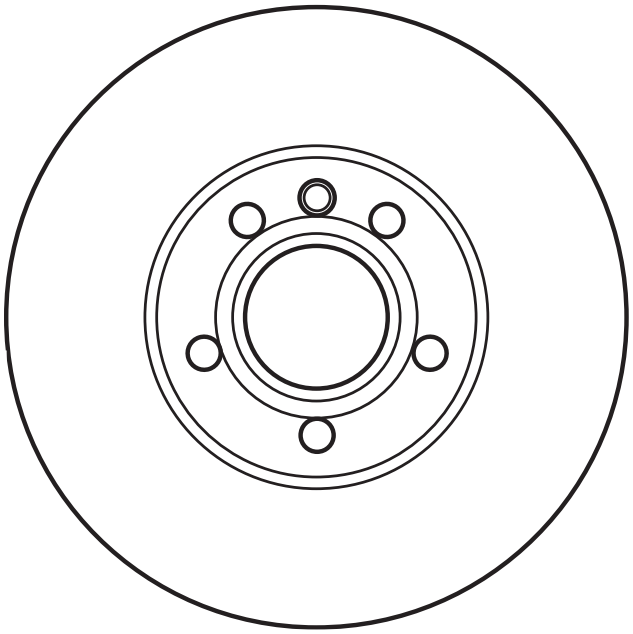

Volkswagen	Transporter Van (T4)	p 416

JURID by Honeywell

© JURID / All rights reserved 2005

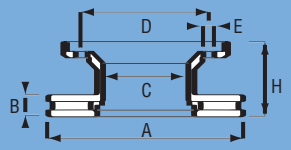

	A	B	B min	H	C	D	E1	E2	E3
562211	280	12	10	102,2	64,5	118	5xM14x1,5		

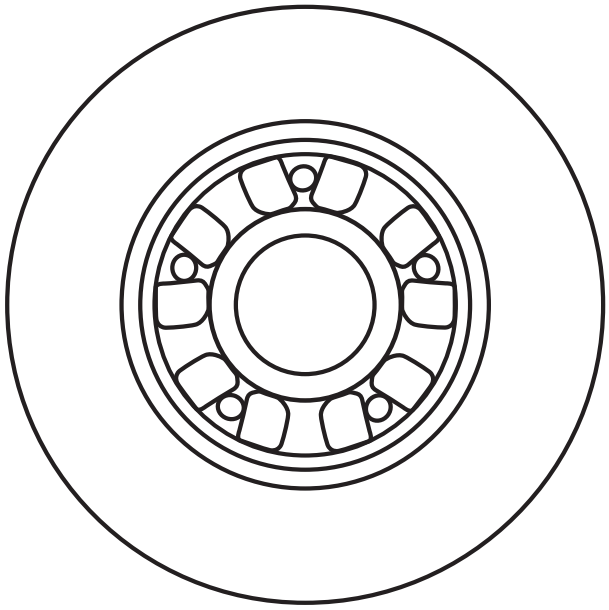

Opel	Vivaro	p 312
Renault	Trafic	p 330
Vauxhall	Vivaro	p 411

	A	B	B min	H	C	D	E1	E2	E3
562215	280	16	14	82	72				

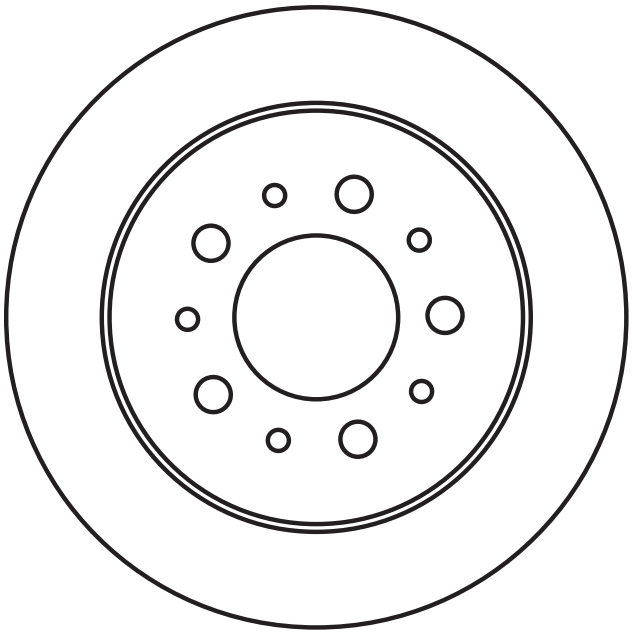

Iveco (Fiat)	Ducato	p 112

JURID / All rights reserved 2005





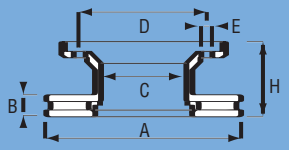

	A	B	B min	H	C	D	E1	E2	E3
567108J	430	45	37	136	194	222	10xM16x1.5		

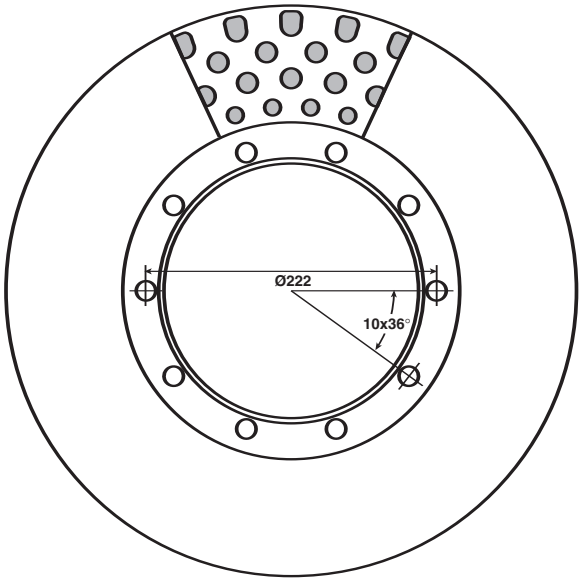

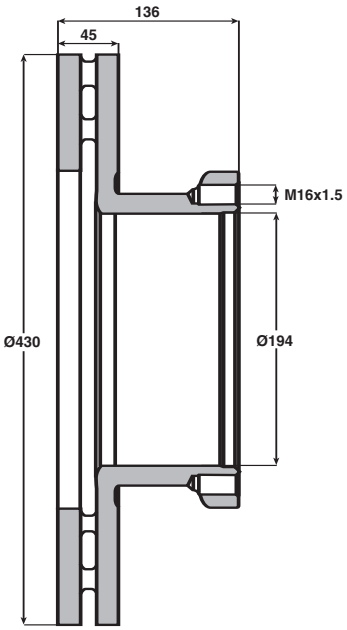

Kassbohrer / Setra  p 130, 132

	A	B	B min	H	C	D	E1	E2	E3
567109J	315	35	28	154,5	253	205	6x18	2xM10	

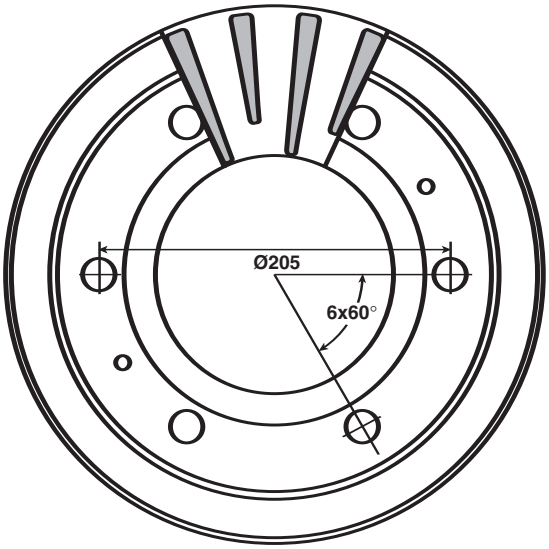

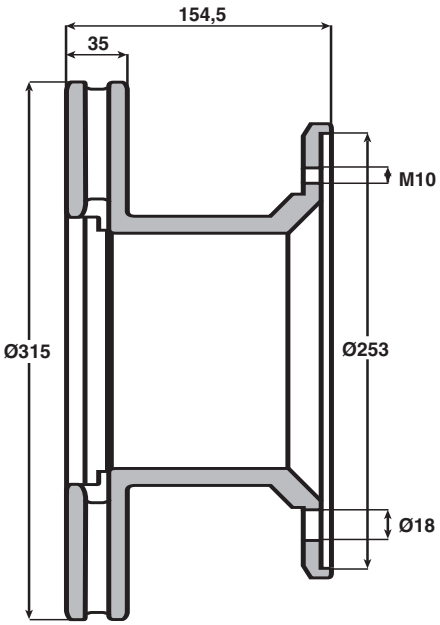

Kassbohrer / Setra  p 130

JURID by Honeywell

© JURID / All rights reserved 2005





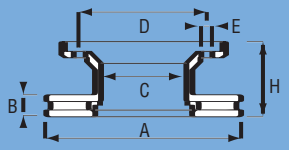

	A	B	B min	H	C	D	E1	E2	E3
567110J	432	45	37	135	194	220	10xM16x1.5		

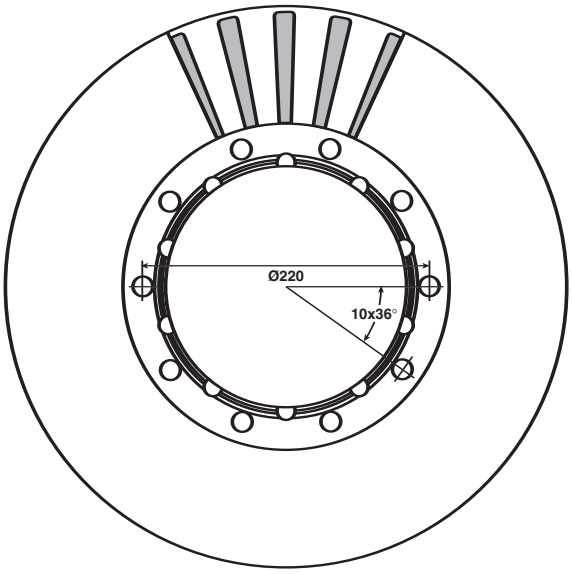

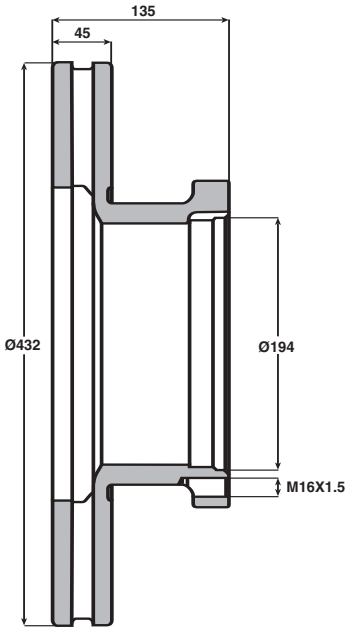

Kassbohrer / Setra p 134

ZF p 448

	A	B	B min	H	C	D	E1	E2	E3
567111J	392	48	38	120	215	255	10xM16x1.5		

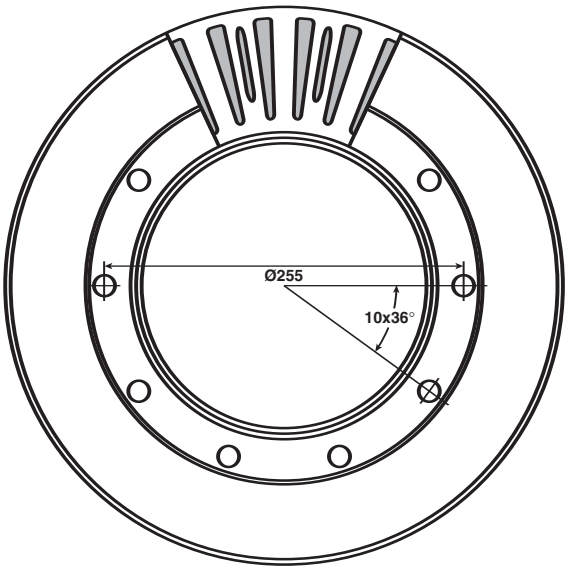

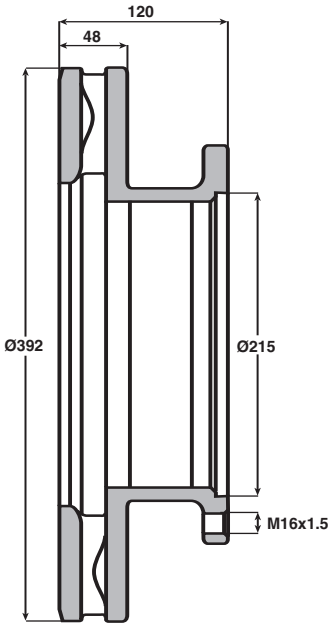

Kassbohrer / Setra p 128, 130, 132, 134

JURID / All rights reserved 2005





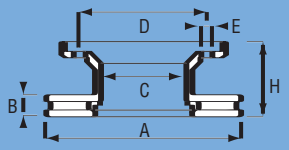

	A	B	B min	H	C	D	E1	E2	E3
567112J	396	48	38	119	194	215	10xM16x1.5		

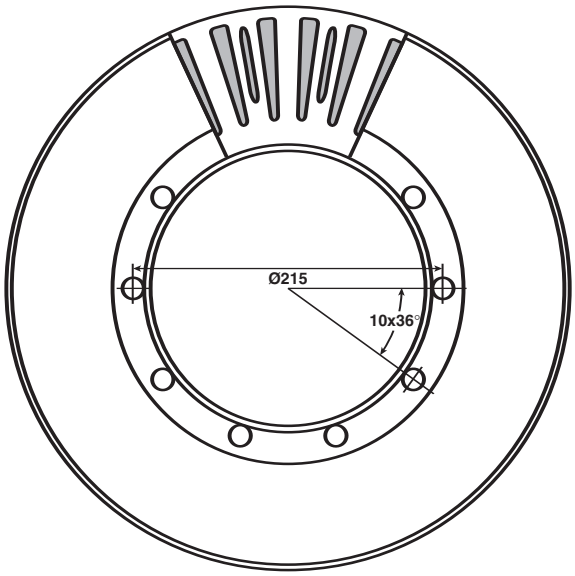

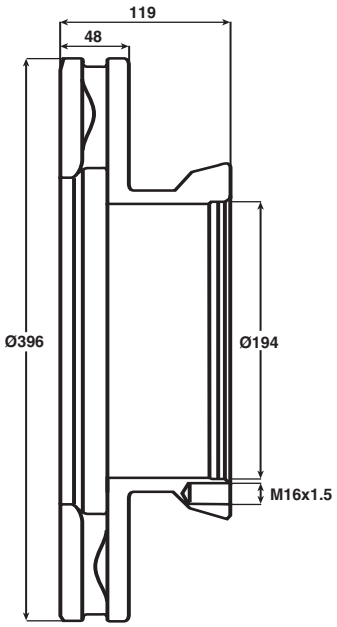

Kassbohrer / Setra  p 128, 130, 132

	A	B	B min	H	C	D	E1	E2	E3
567113J	406	48	38	175	194	215	10xM16x1.5		

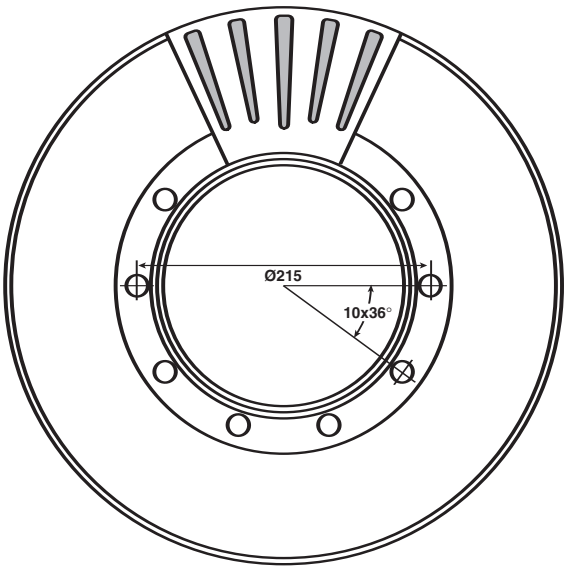

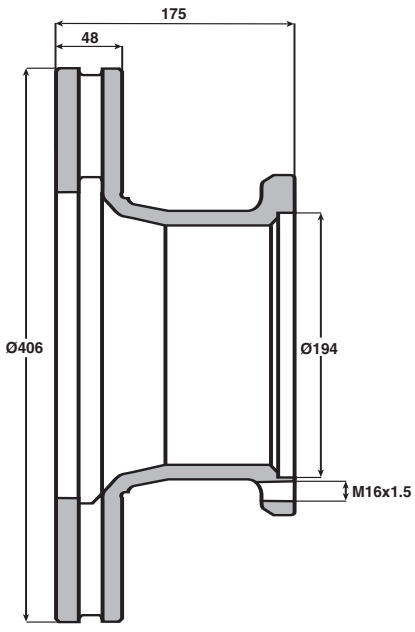

Kassbohrer / Setra  p 130

Van Hool  p 410

JURID by Honeywell

©JURID / All rights reserved 2005





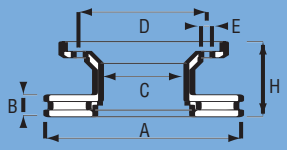

	A	B	B min	H	C	D	E1	E2	E3
567114J	322	30	27	138	216	275	8x13		

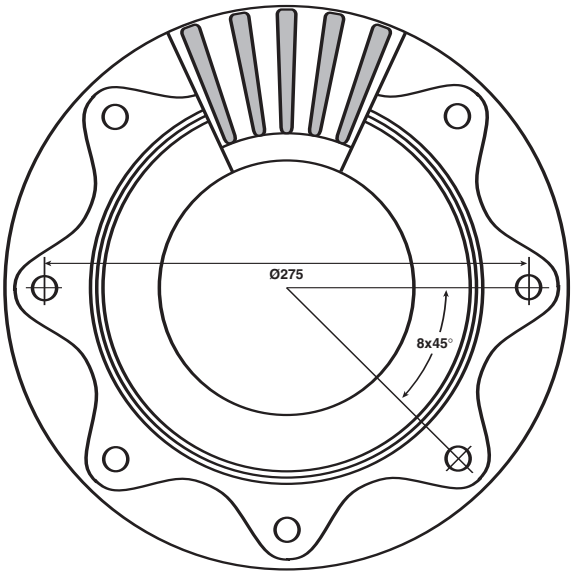

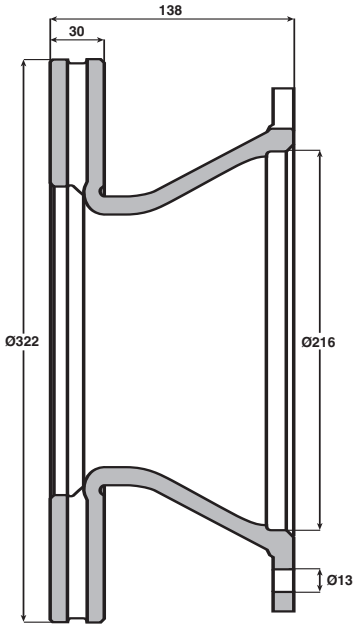

Volvo  FL6 p 430

567115J	460	48	38	119	170	195	10xM16x2		

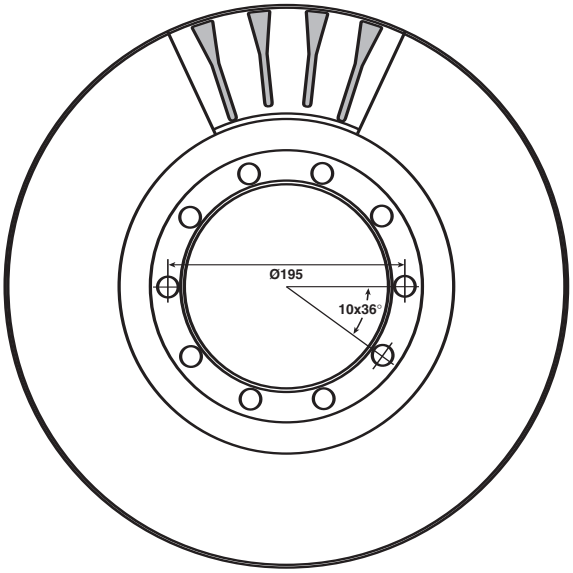

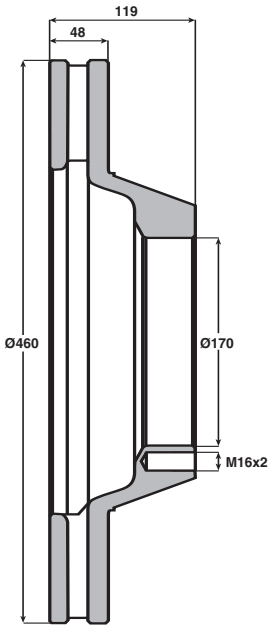

Bova		Futura	p 18
Daf		MB	p 48
		SB	p 49
Neoplan		Jetliner	p 298

JURID / All rights reserved 2005

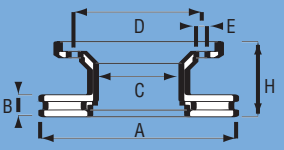

	A	B	B min	H	C	D	E1	E2	E3
567116J	322	30	27,5	134	215	275	8x20.15	2xM10x1.5	

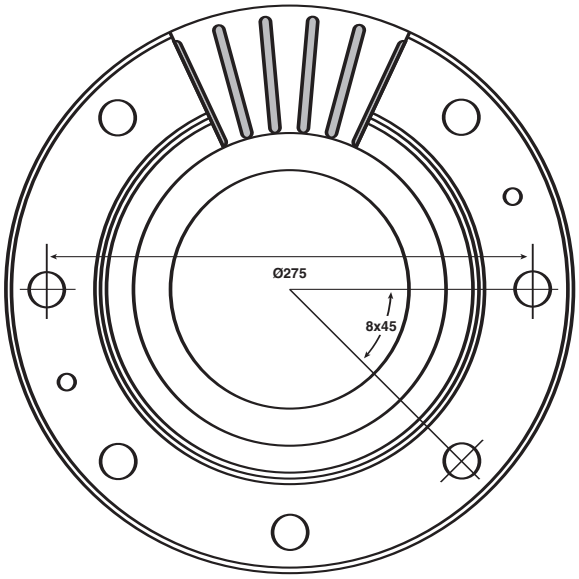

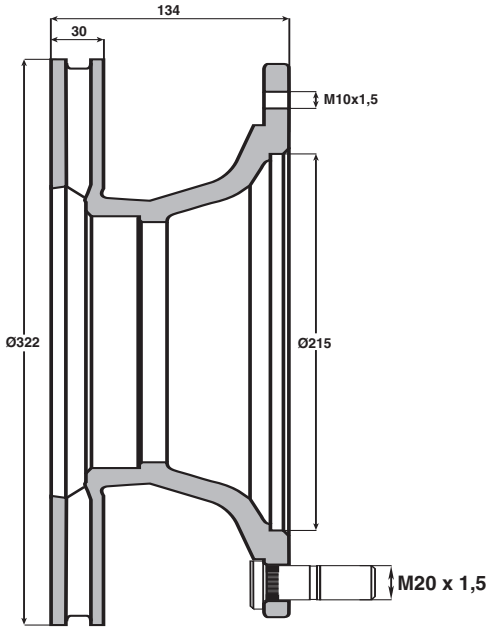

Iveco		Eurocargo	p 90

	A	B	B min	H	C	D	E1	E2	E3
567117J	430	50	42	102	170	195	12xM16		

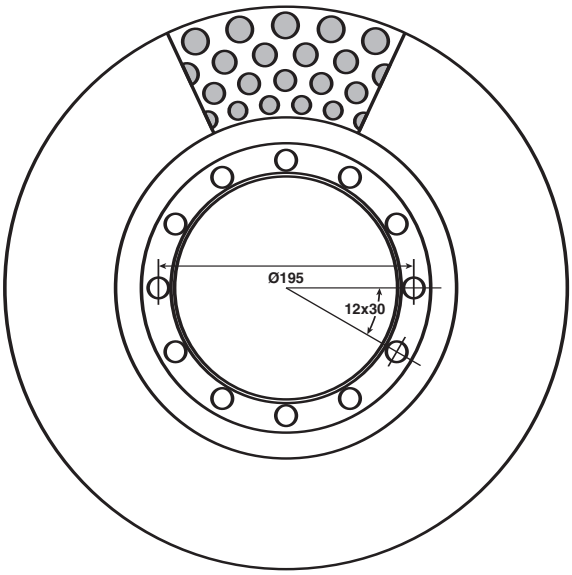

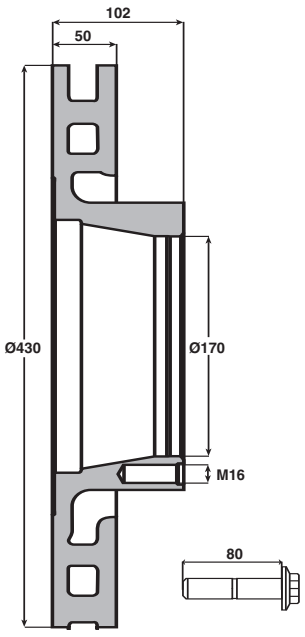

Iveco		Eurocargo	p 90
		Eurostar	p 90, 92, 94
		Eurotech	p 98, 100

JURID by Honeywell

JURID / All rights reserved 2005





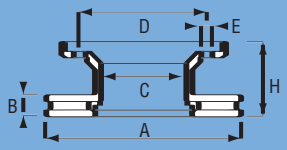

	A	B	B min	H	C	D	E1	E2	E3
567118J	290	22	20	111	68	170	6xM18x1.5	6x12.6	

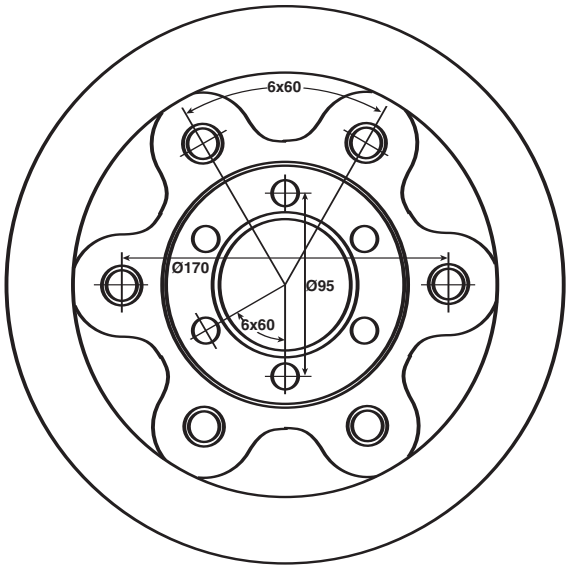

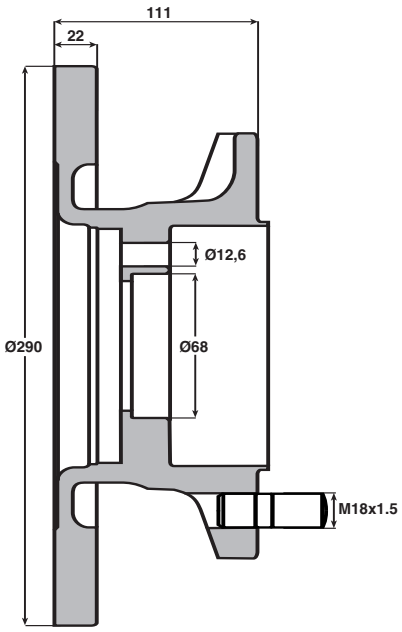

Iveco



Daily p 86



Daily II p 88

	A	B	B min	H	C	D	E1	E2	E3
567119J	315	35	32	153,5	240	205	6x18.15	2xM10x1.5	

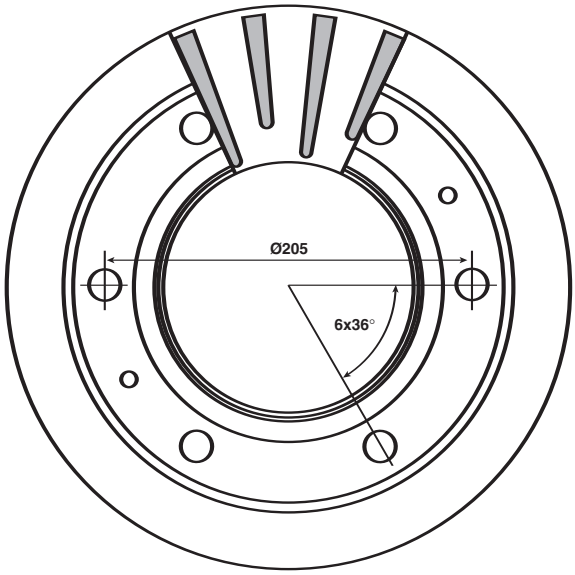

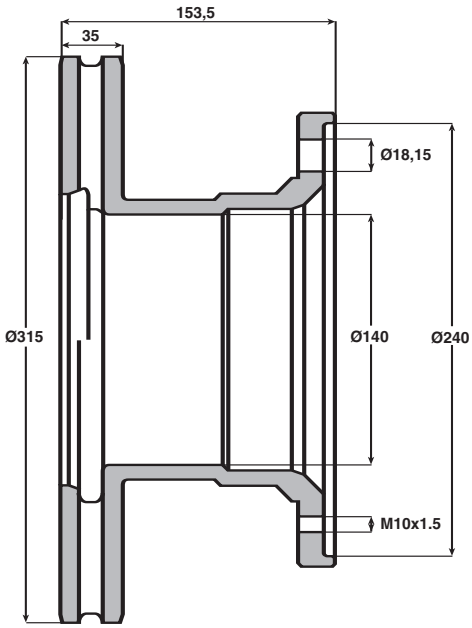

Iveco



p 108

Iveco (Magirus)



p 120

JURID / All rights reserved 2005

JURID by Honeywell





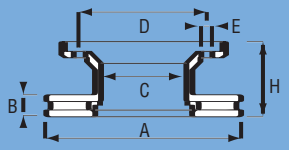

		A	B	B min	H	C	D	E1	E2	E3
567120J		417	30	27	80	157	186	10x18.4		

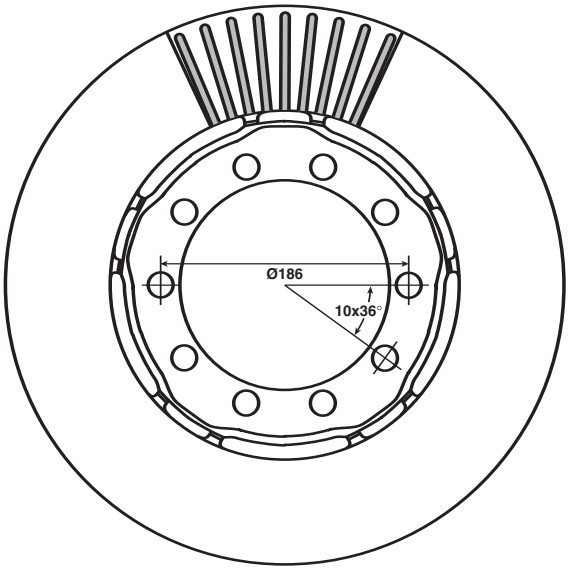

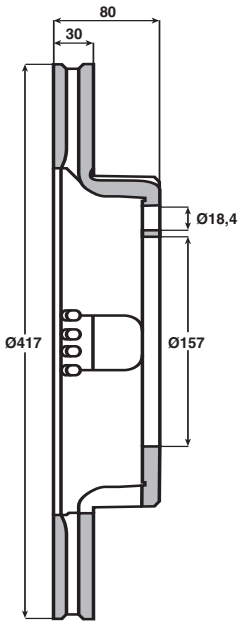

Iveco  p 110

567121J		322	30	27,5	126	148	205	6x21	3xM8	

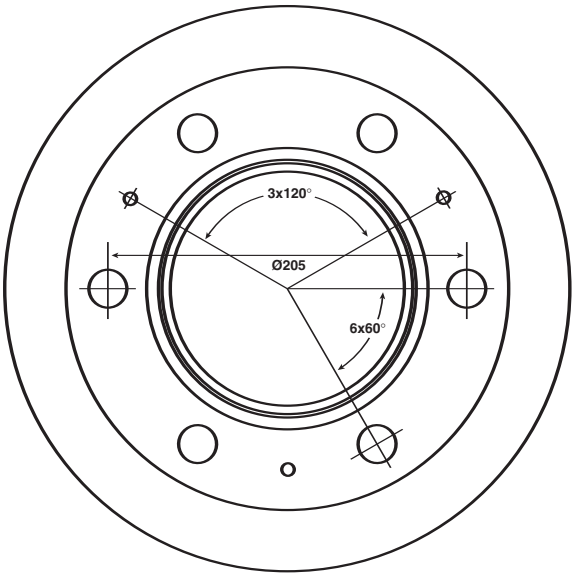

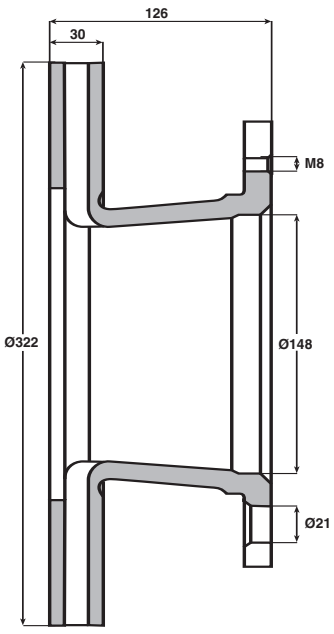

Ford  Cargo p 70

JURID by Honeywell

© JURID / All rights reserved 2005





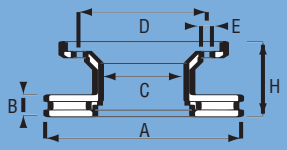

	A	B	B min	H	C	D	E1	E2	E3
567122J	315	26	23	121,5	119	138	10xM12		

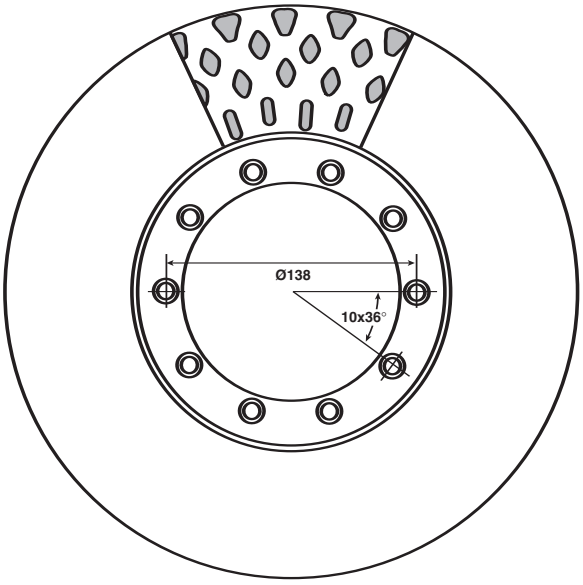

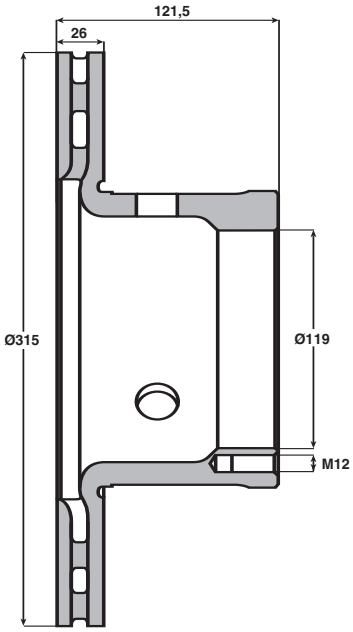

Daf		45	p 42
		600	p 42
		800	p 44
Leyland / DAF		T 45	p 146

	A	B	B min	H	C	D	E1	E2	E3
567123J	312	30	27,5	137	133,5	155	12xM12		

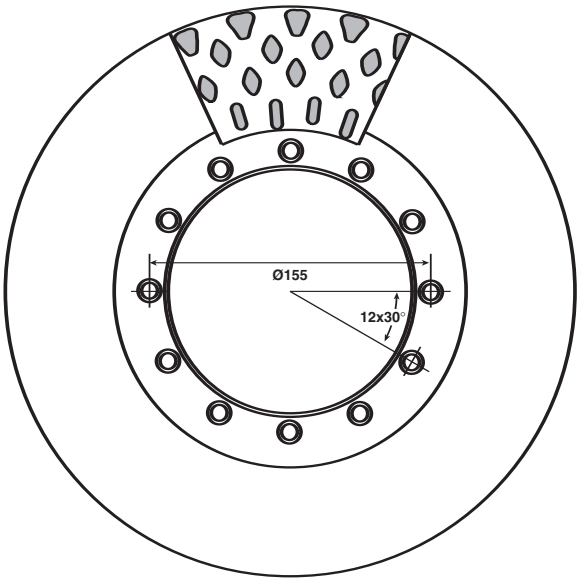

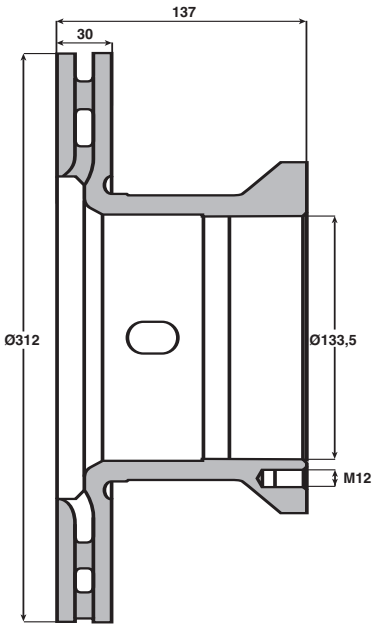

Daf		1000	p 30
		45	p 42
Leyland / DAF		T 45	p 146

JURID / All rights reserved 2005

JURID by Honeywell





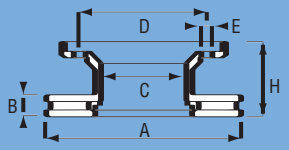

		A	B	B min	H	C	D	E1	E2	E3
567124J		290	25	22	160,5	120	205	6xM18x1.5	6x12.5	

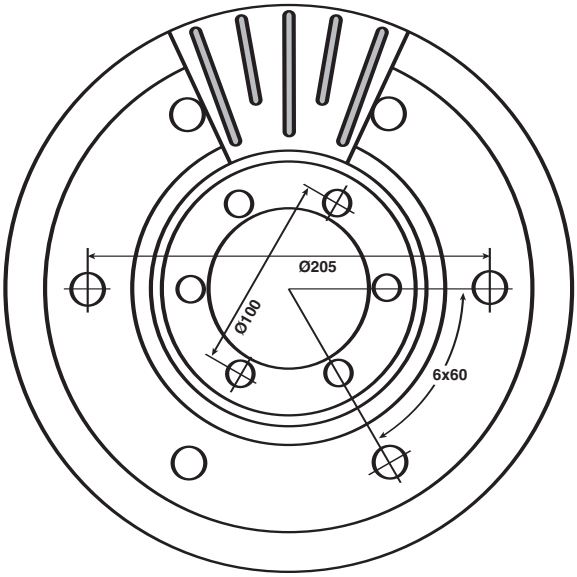

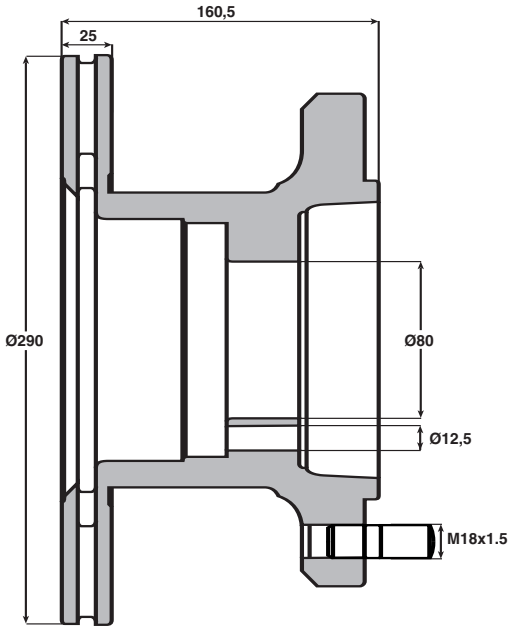

Iveco  Daily p 86

567125J		370	45	37	150	215	275	8x20.15	2xM10	

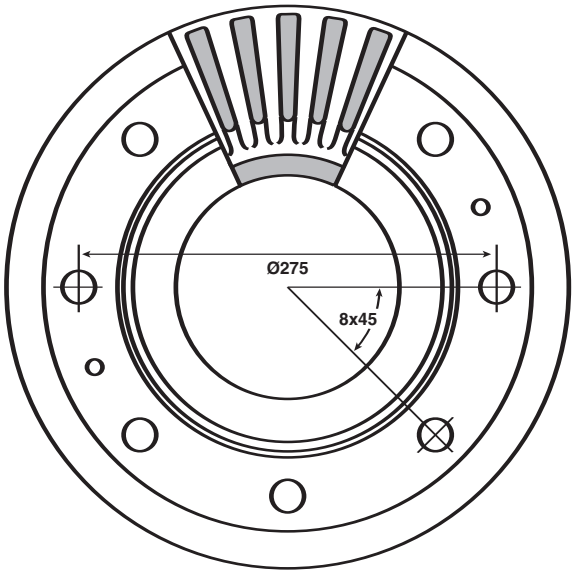

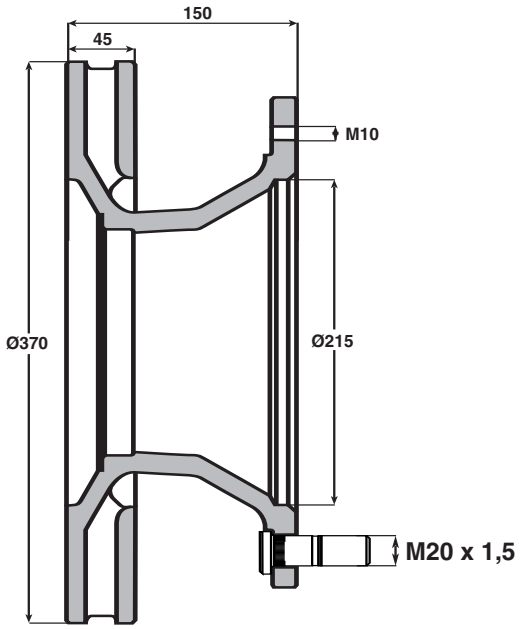

Iveco  Eurocargo p 90
p 112

JURID by Honeywell

© JURID / All rights reserved 2005





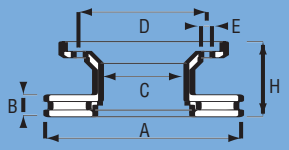

		A	B	B min	H	C	D	E1	E2	E3
567126J		370	45	37	181,5	215	275	8x22.15	2xM10	

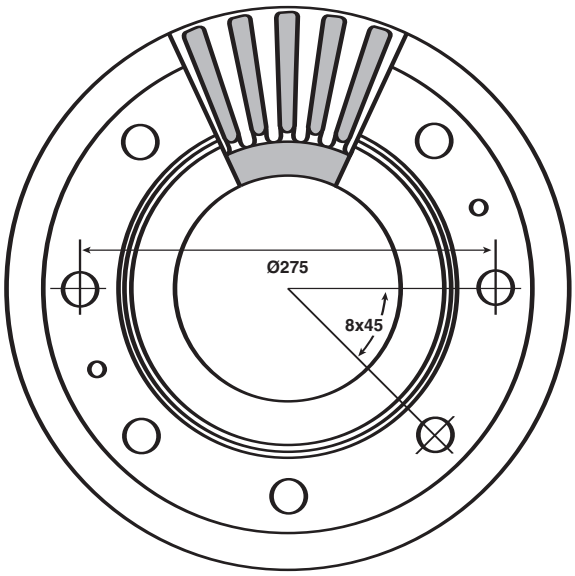

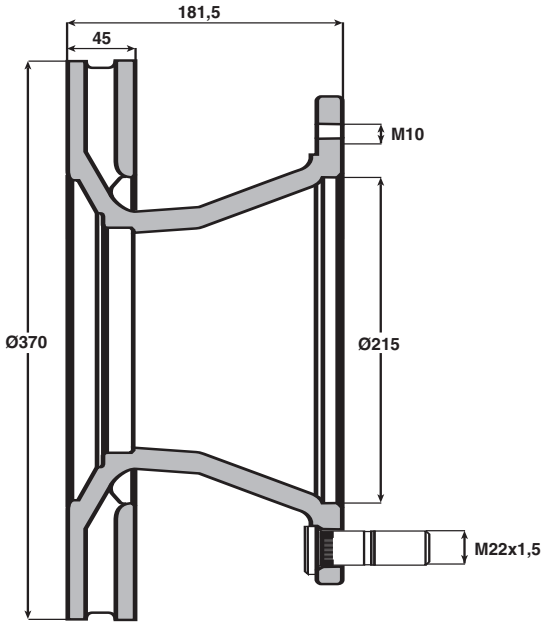

Iveco  Eurocargo p 90

567127J		304	30	27,5	128,5	165	205	6x18.15	2xM10	

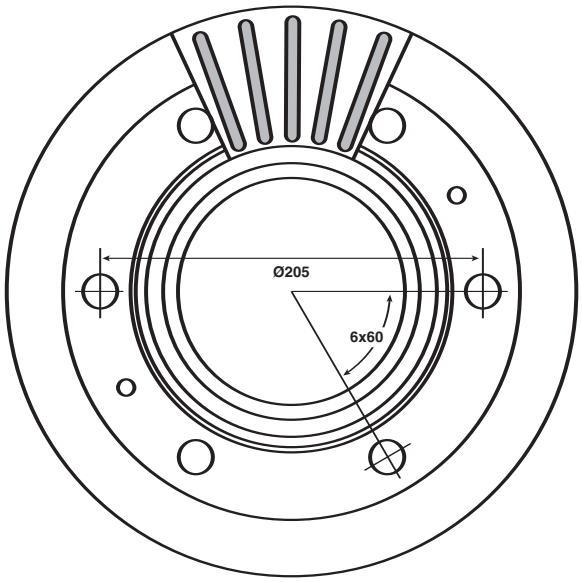

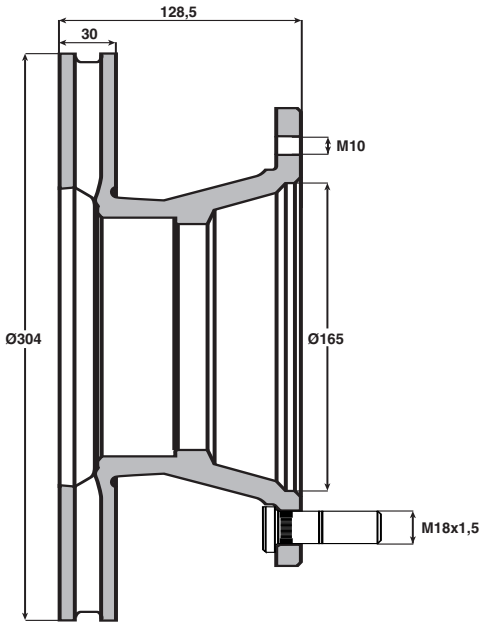

Iveco  Eurocargo p 90

JURID / All rights reserved 2005

JURID by Honeywell



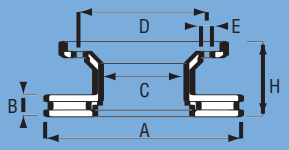

	A	B	B min	H	C	D	E1	E2	E3
567128J	289	22	20	84,5	84	108	8x10.5		

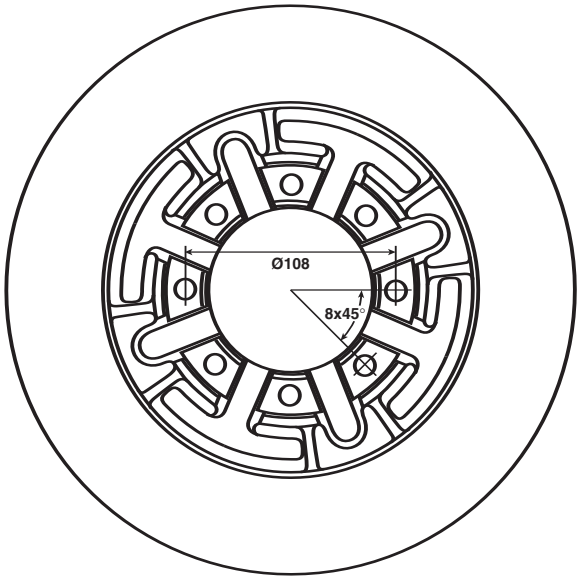

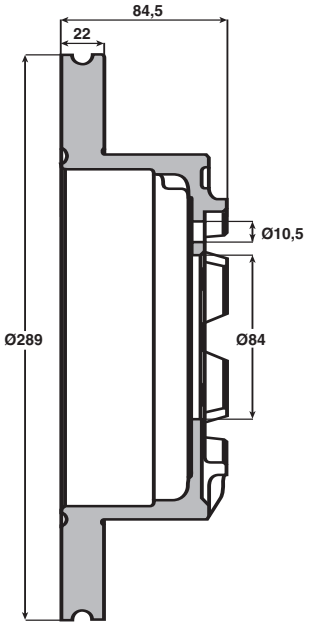

Iveco

Daily p 86
Daily II p 88

	A	B	B min	H	C	D	E1	E2	E3
567130J	425	45	38	170,5	285	335	10x22.15	2xM10	

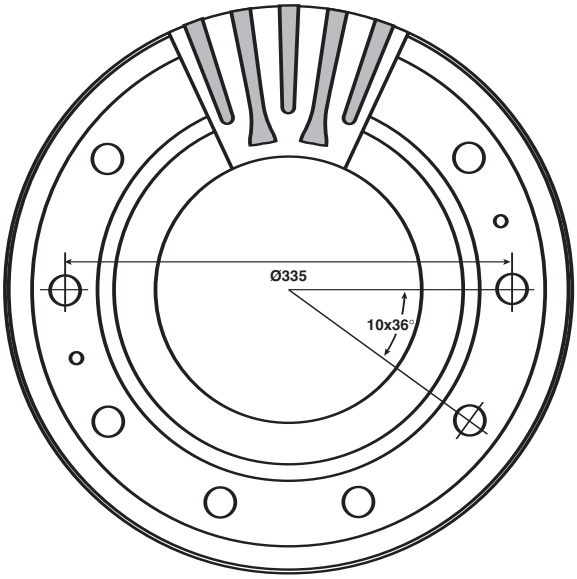

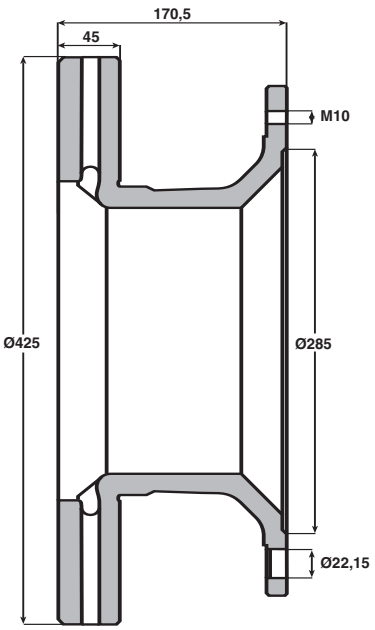

Iveco

p 110

JURID by Honeywell

JURID / All rights reserved 2005





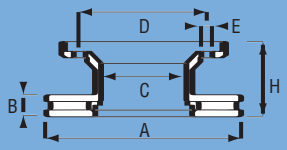

	A	B	B min	H	C	D	E1	E2	E3
567131J	425	45	41	165,5	215	255	10xM16		

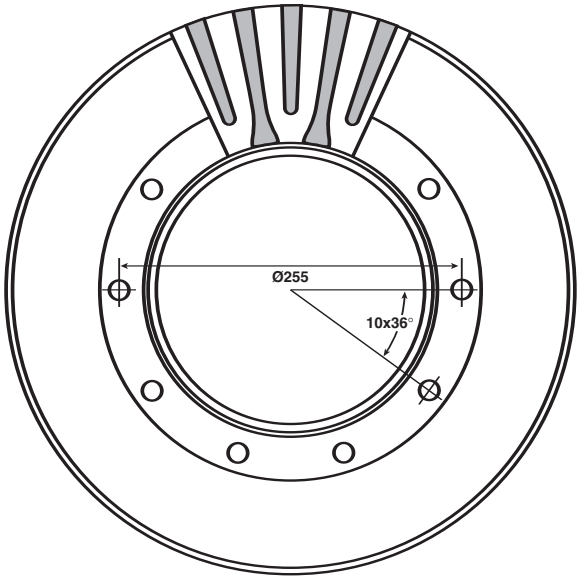

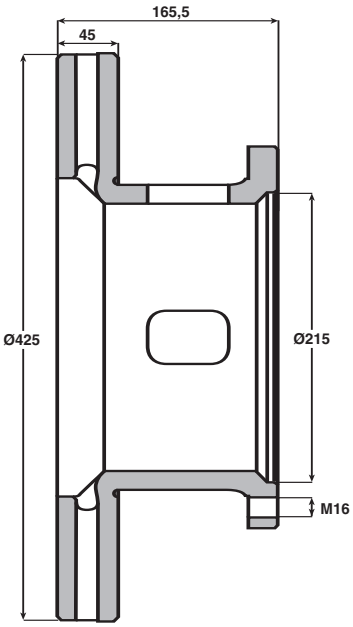

Iveco  p 110

	A	B	B min	H	C	D	E1	E2	E3
567134J	417	28	25,5	67	159	186	10x18.5		

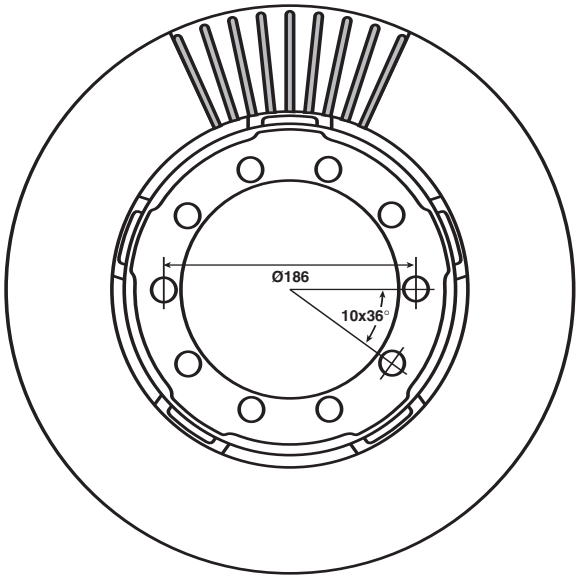

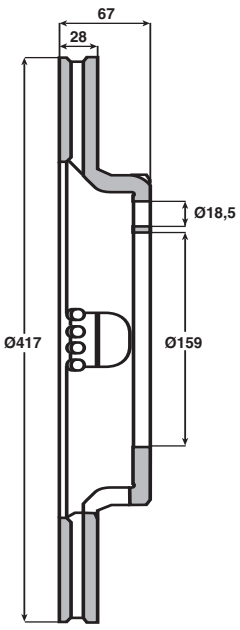

Iveco  p 112

JURID / All rights reserved 2005

JURID by Honeywell

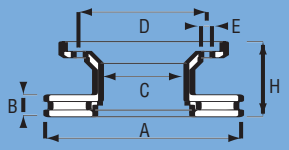

		A	B	B min	H	C	D	E1	E2	E3
567135J		436	45	37	138,5	210	240	12xM16		

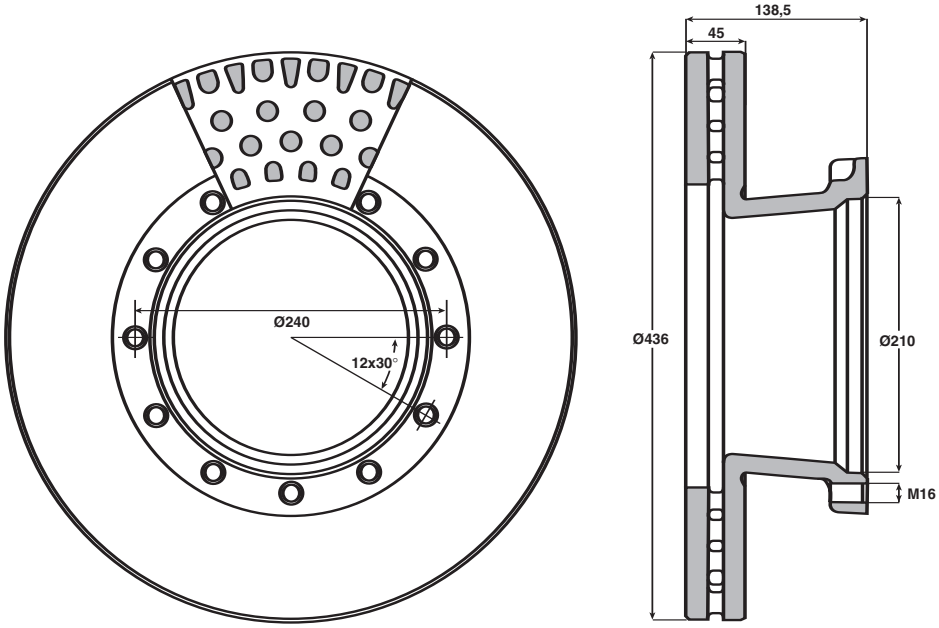

Iveco		Eurostar	p 94
		Eurotech	p 94, 98, 100

		A	B	B min	H	C	D	E1	E2	E3
567140J		380	30	26	68	145	180	8xM18x1.5		

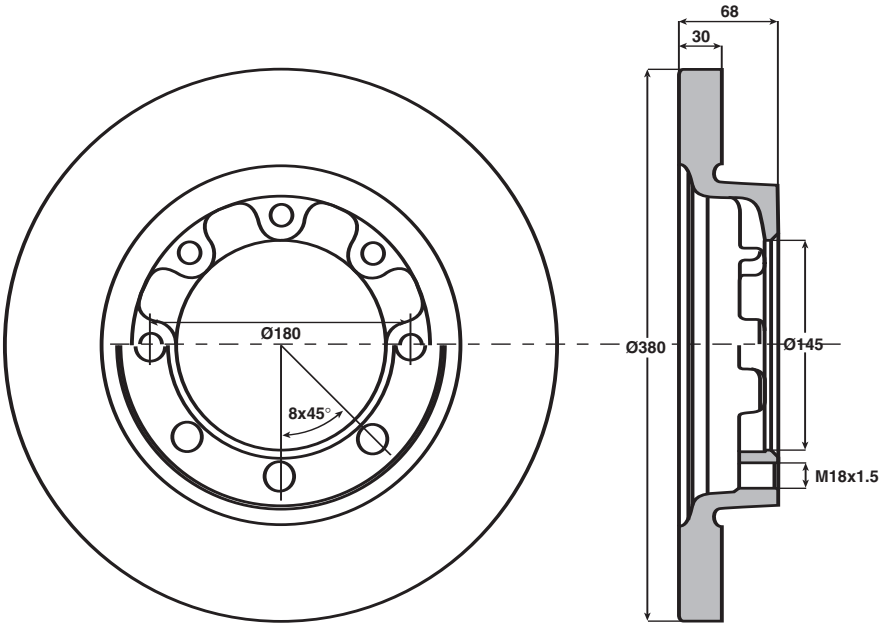

Mercedes Benz		Unimog	p 274

JURID by Honeywell

© JURID / All rights reserved 2005





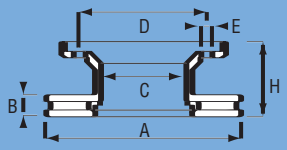

	A	B	B min	H	C	D	E1	E2	E3
567141J	374	22	20,5	22	80,25	108	10x16.5		

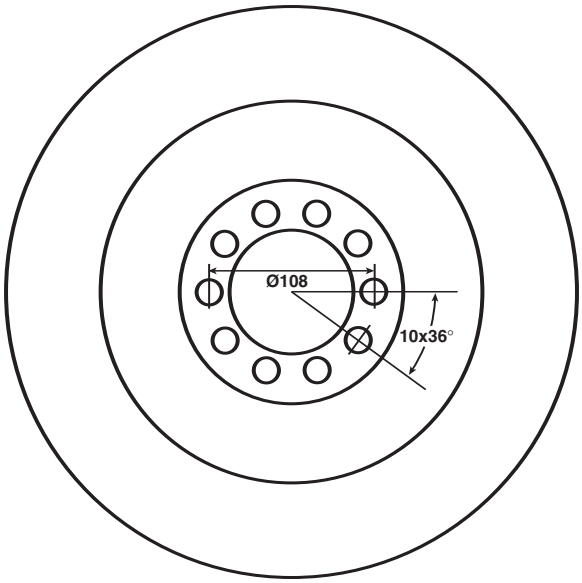

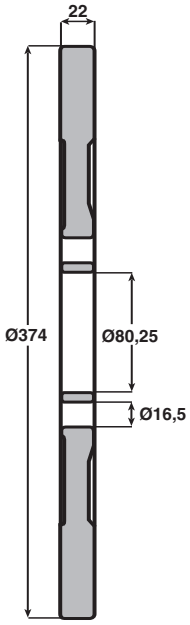

Mercedes Benz  Unimog p 274

	A	B	B min	H	C	D	E1	E2	E3
567142J	374	22	20,5	22	60,1	108	10x16.5		

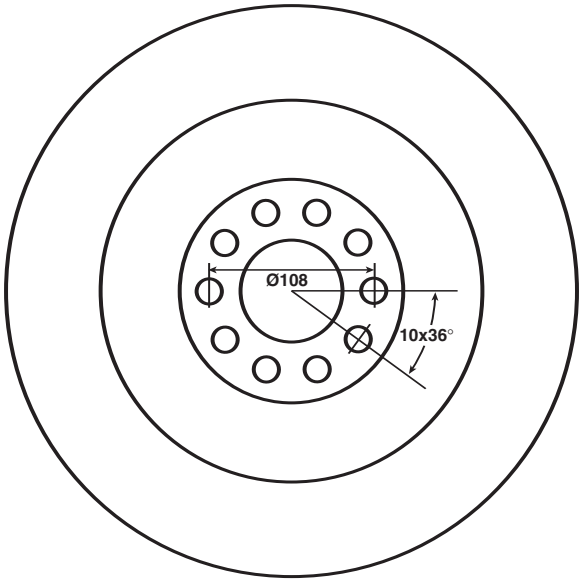

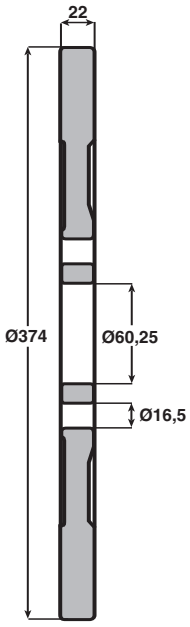

Mercedes Benz  Unimog p 274, 276

JURID / All rights reserved 2005



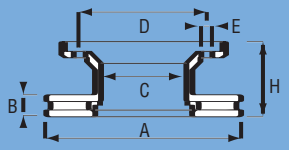

	A	B	B min	H	C	D	E1	E2	E3
567143J	386	22	20,5	71	145	180	8xM18x1.5		

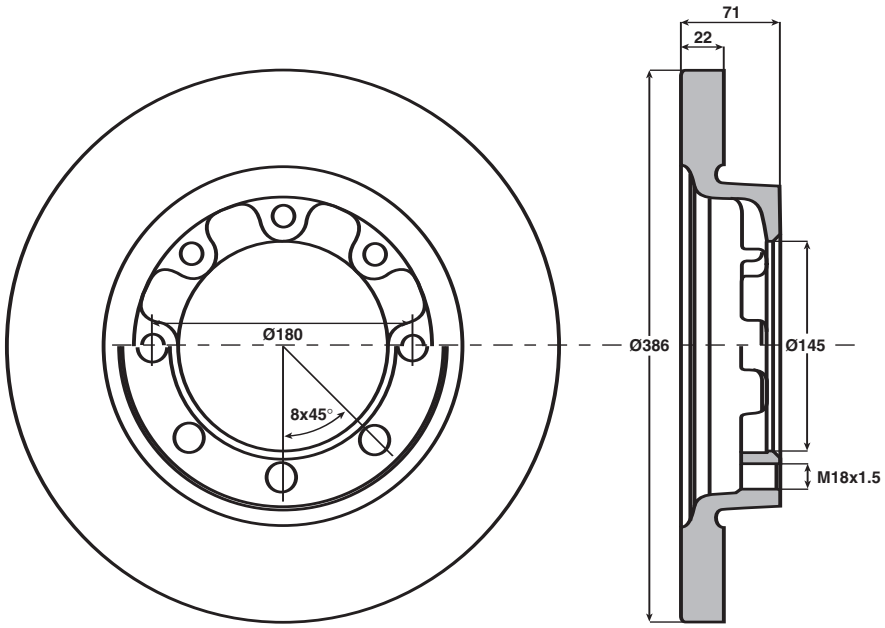

Mercedes Benz Unimog p 274, 276

	A	B	B min	H	C	D	E1	E2	E3
567144J	421	22	20,5	62	145	180	8xM18x1.5		

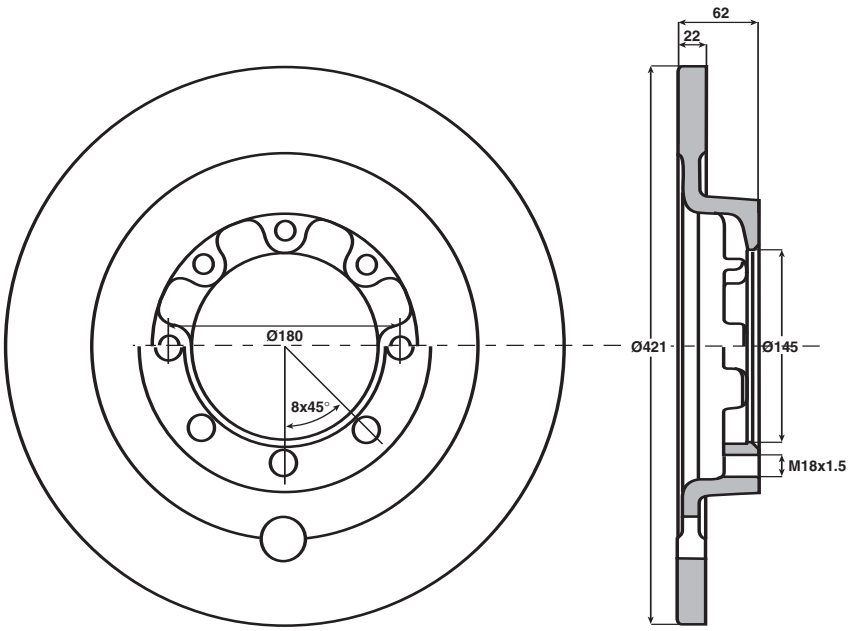

Mercedes Benz MB Trac p 274

JURID by Honeywell

© JURID / All rights reserved 2005





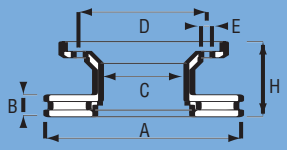

	A	B	B min	H	C	D	E1	E2	E3
567145J	263	24	22	82	102	140	5xM14x1.5		

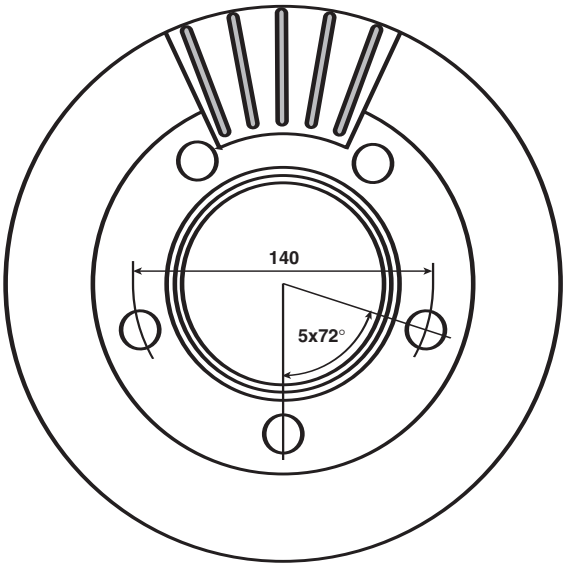

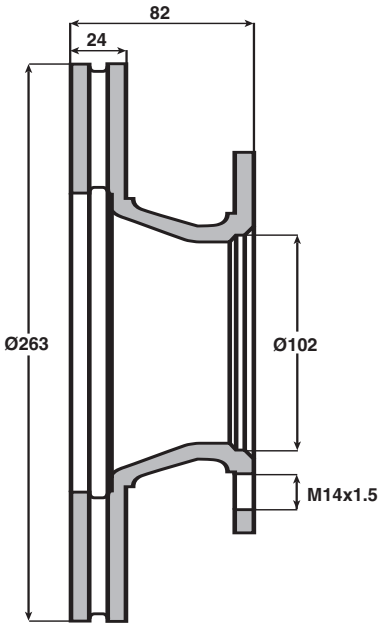

Mercedes Benz		MB	p 196
		MB	p 276

567150J	322	30	28	115	164	190	6xM12		

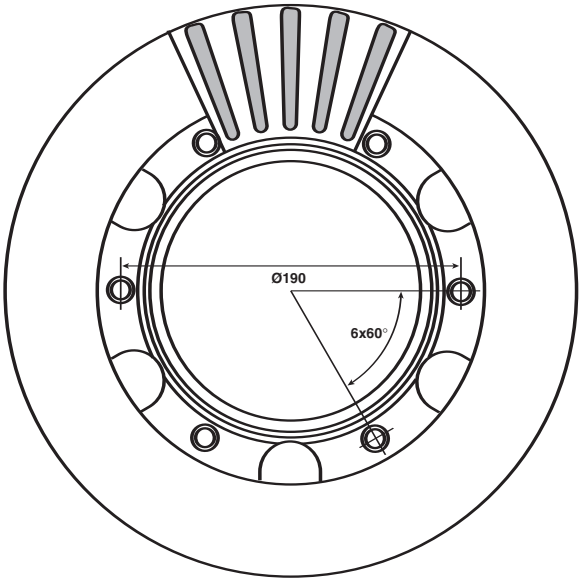

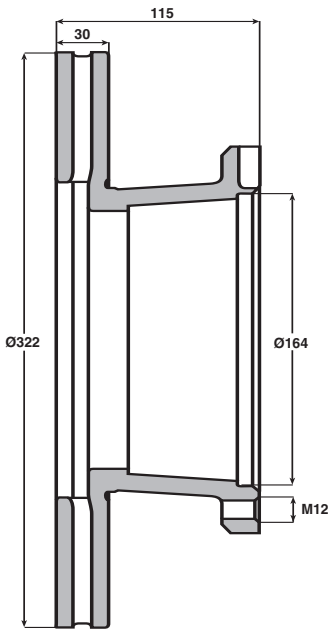

Volvo		FL4	p 430

JURID / All rights reserved 2005

JURID by Honeywell





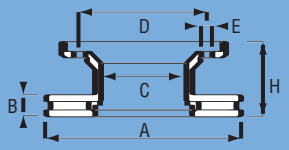

		A	B	B min	H	C	D	E1	E2	E3
567151J		322	30	27	138	216	275	8xM12		

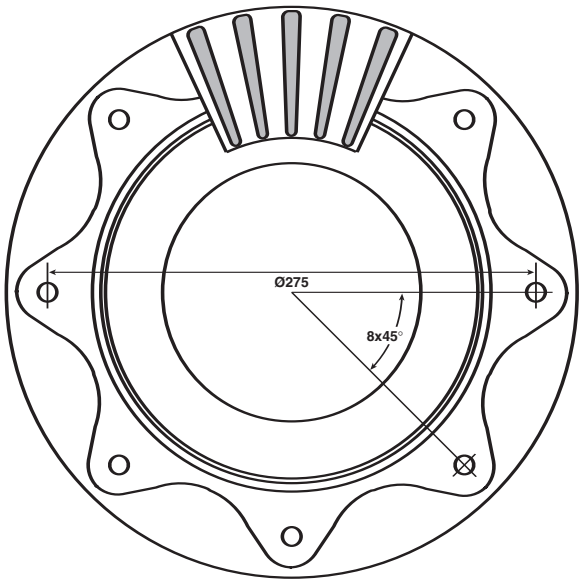

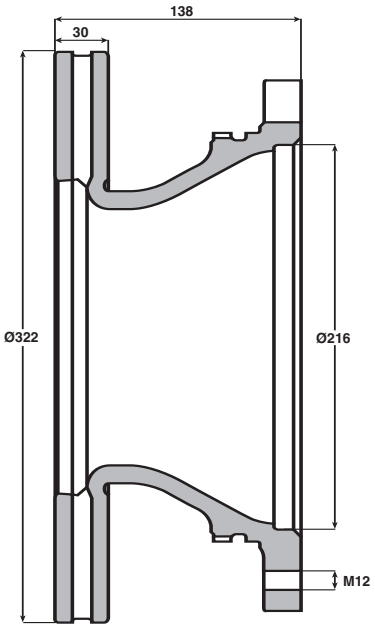

Volvo  FL6 p 430

		A	B	B min	H	C	D	E1	E2	E3
567152J		438	45	37	127,1	195	235	10xM16x1.5		

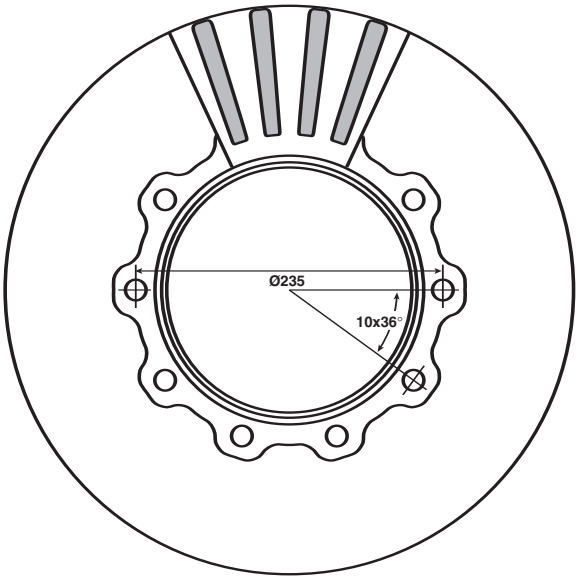

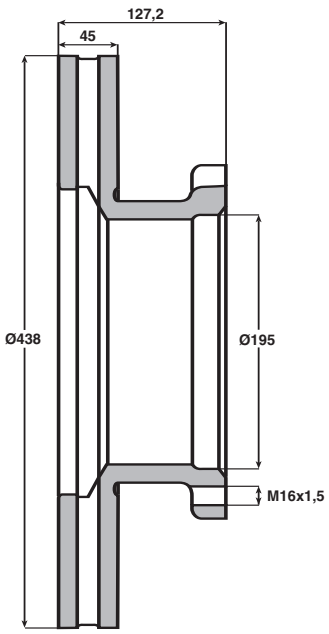

Volvo  p 436

JURID by Honeywell

© JURID / All rights reserved 2005





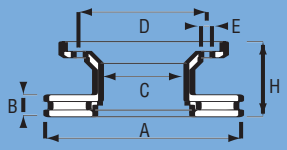

	A	B	B min	H	C	D	E1	E2	E3
567400J	438	45	35	135	200	235	10xM16x1.5		

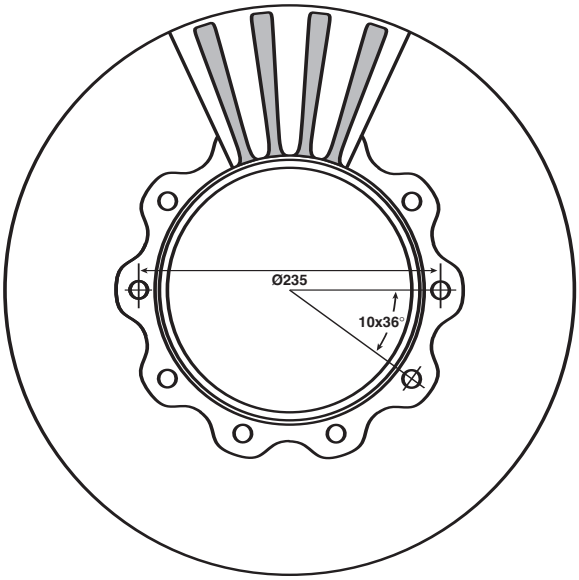

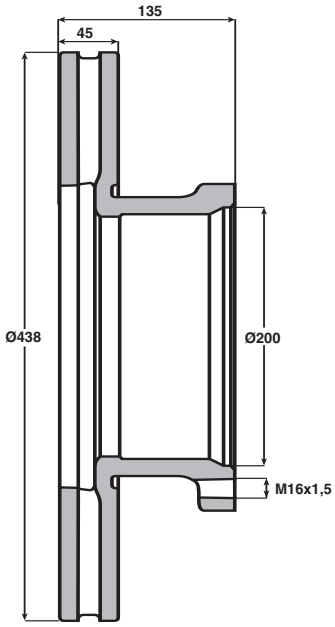

MAN		F 2000	p 162
		F 90	p 170
			p 190, 192

	A	B	B min	H	C	D	E1	E2	E3
567401J	325	30	24	102	135	158	10xM14x1.5		

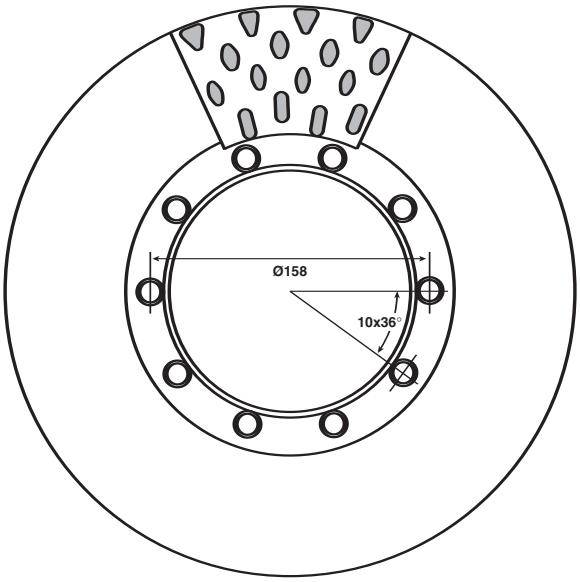

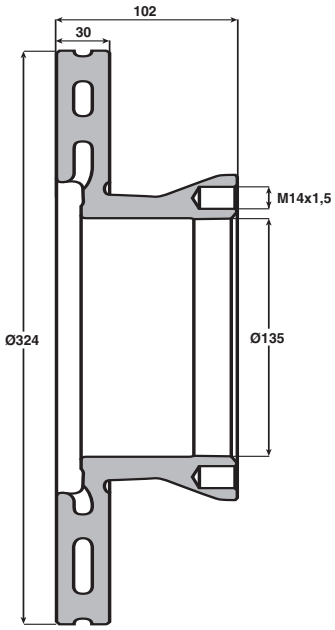

MAN		L 2000	p 178
			p 192, 194

JURID / All rights reserved 2005

JURID by Honeywell





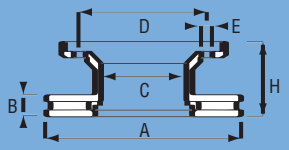

	A	B	B min	H	C	D	E1	E2	E3
567402J	330	34	26	104	135	158	10xM14x1.5		

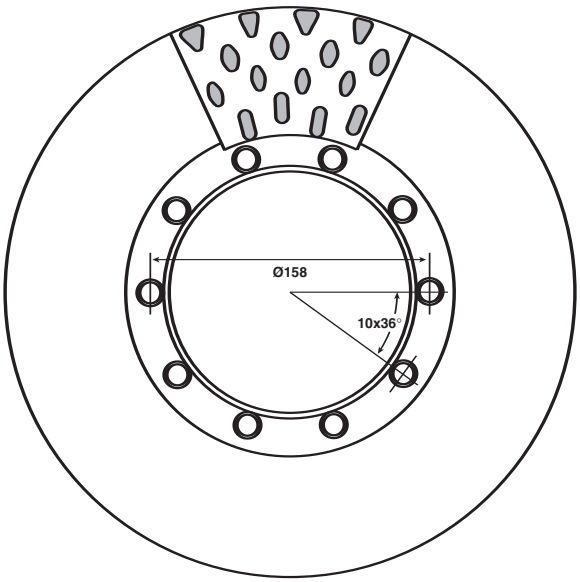

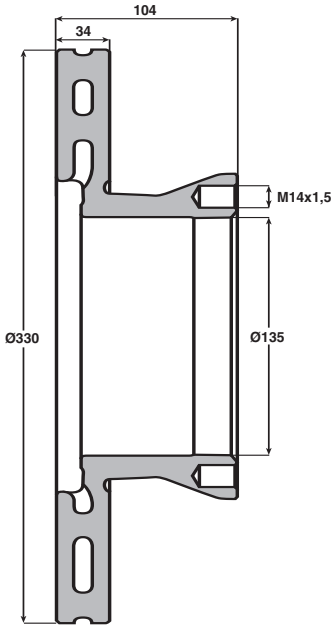

MAN  L 2000 p 178 p 192, 194

	A	B	B min	H	C	D	E1	E2	E3
567403J	377	45	37	128	162	195	10xM14x1.5		

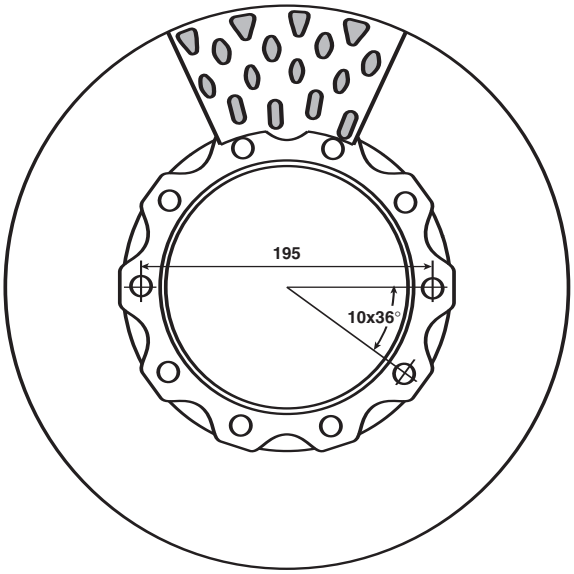

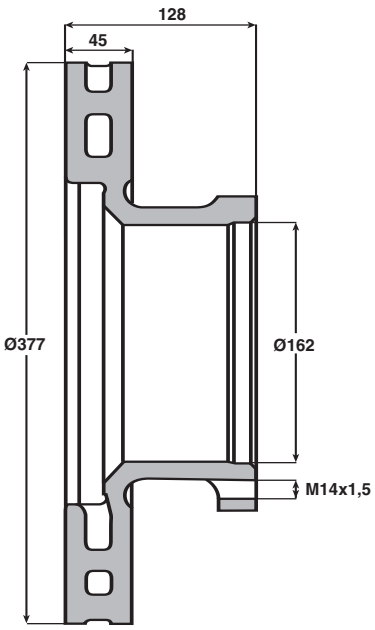

MAN  M 2000 p 180

JURID by Honeywell

©JURID / All rights reserved 2005





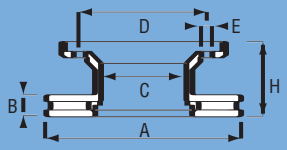

	A	B	B min	H	C	D	E1	E2	E3
567405J	330	34	26	124	157	180	12xM12x1.5		

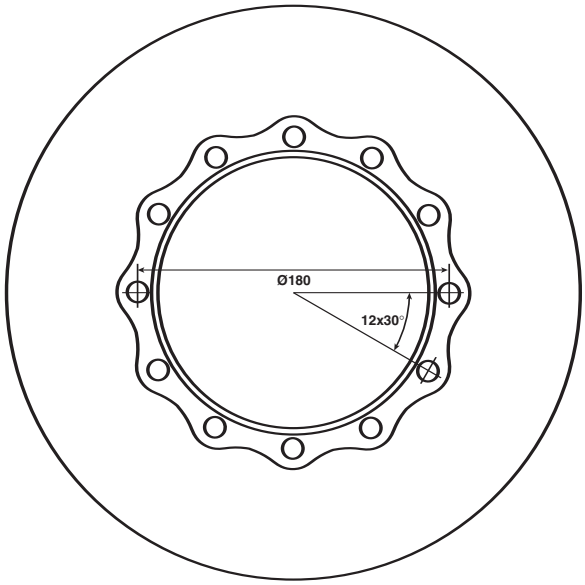

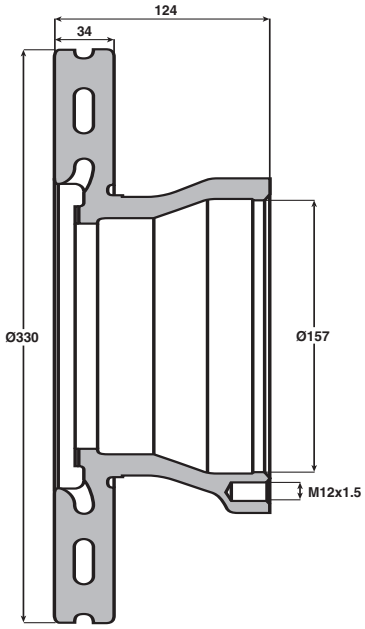

MAN		L 2000	p 178
		M 2000	p 180
			p 194

	A	B	B min	H	C	D	E1	E2	E3
567406J	432	45	35	135	208	235	10xM16x1.5		

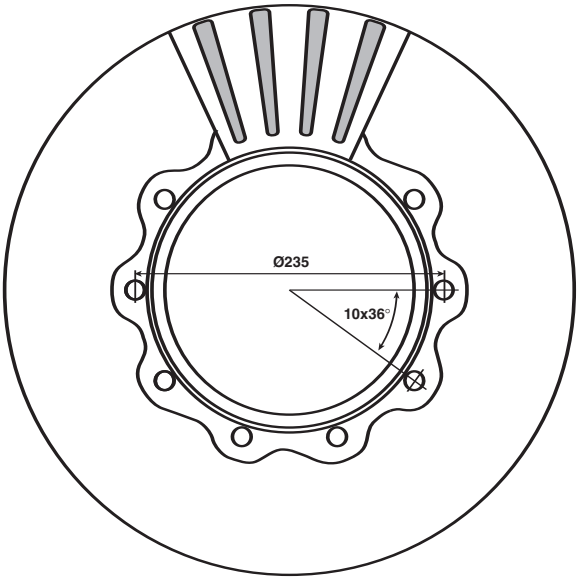

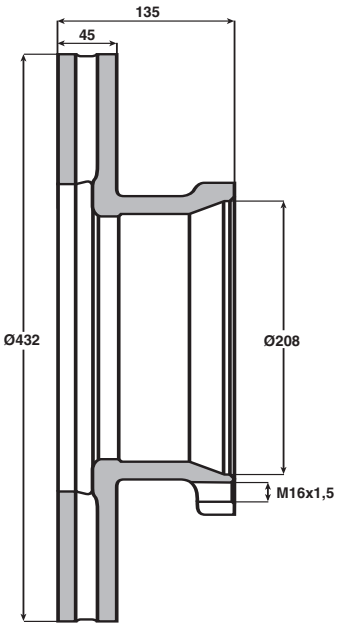

MAN		F 90	p 170, 172
		TG-A	p 188
			p 190, 192

JURID / All rights reserved 2005

JURID by Honeywell





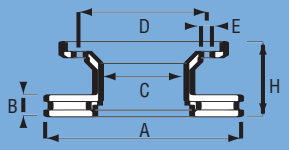

	A	B	B min	H	C	D	E1	E2	E3
567407J	432	45	35	135	208	235	10xM16x1.5		

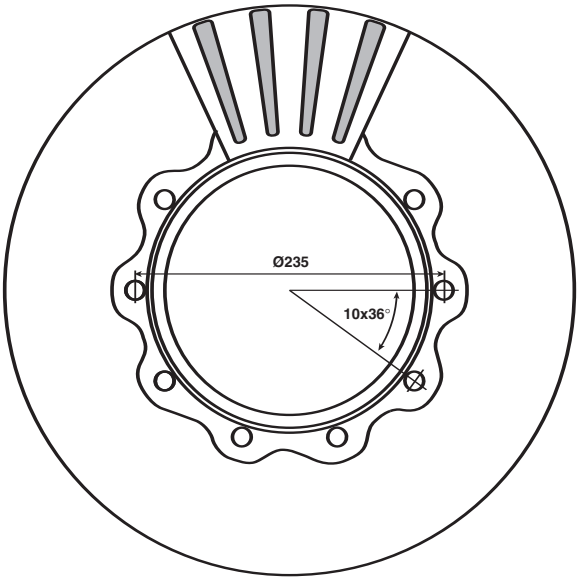

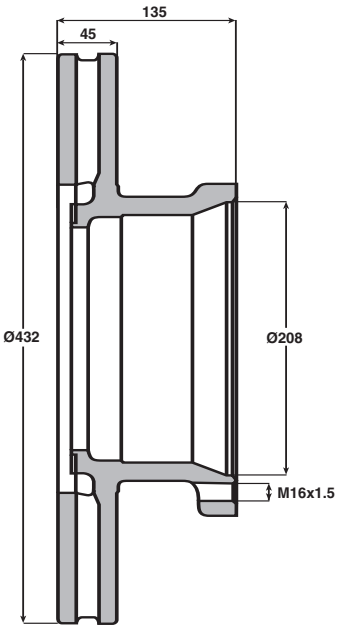

MAN

F 90	p 172
TG-A	p 188
	p 190, 192

	A	B	B min	H	C	D	E1	E2	E3
567408J	432	45	37	130	131	168	12x19	3xM12x1.5	

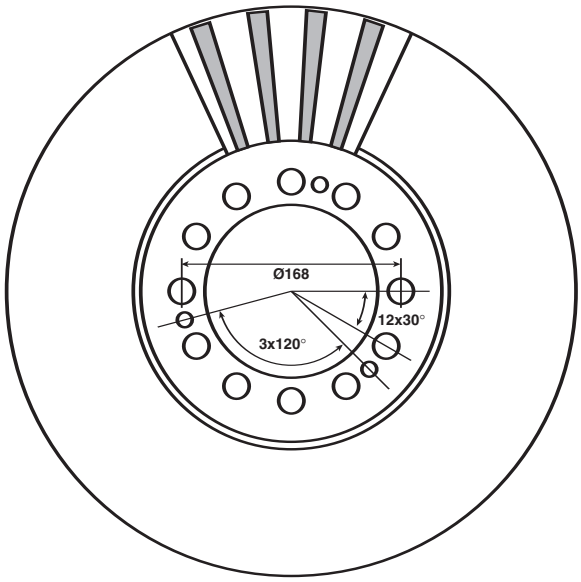

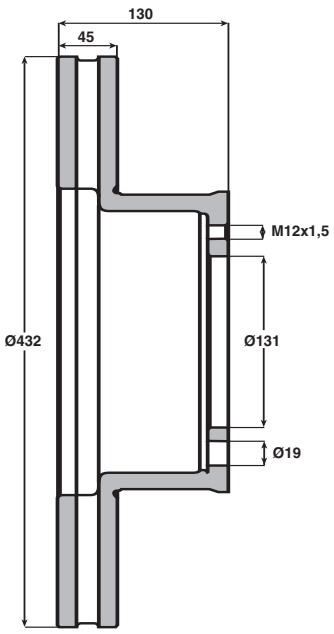

MAN

F 2000	p 164
F 90	p 170, 172
M 2000	p 180
TG-A	p 188
	p 190, 192

JURID by Honeywell

JURID / All rights reserved 2005





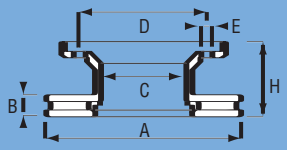

	A	B	B min	H	C	D	E1	E2	E3
567410J	432	45	35	135	208	235	10xM16x1.5		

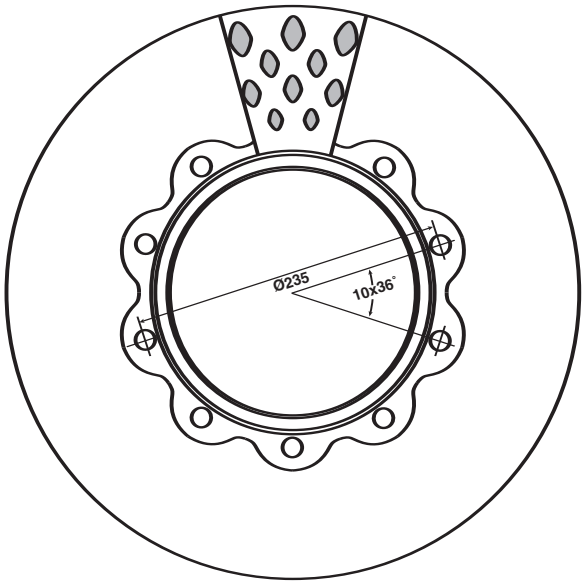

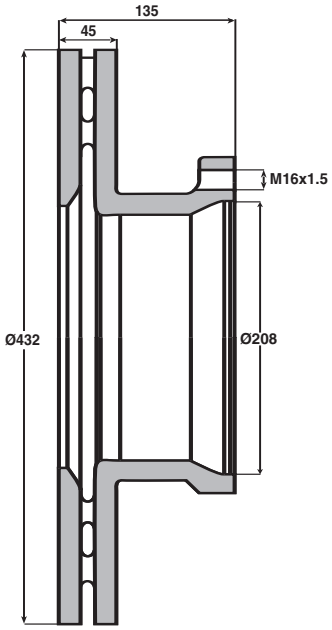

MAN



F 2000 p 164

	A	B	B min	H	C	D	E1	E2	E3
567500J	430	45	37	131	208	237	10xM16x1.5		

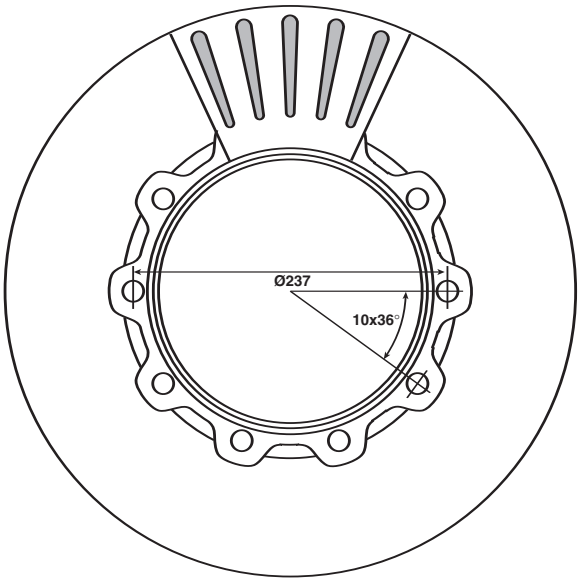

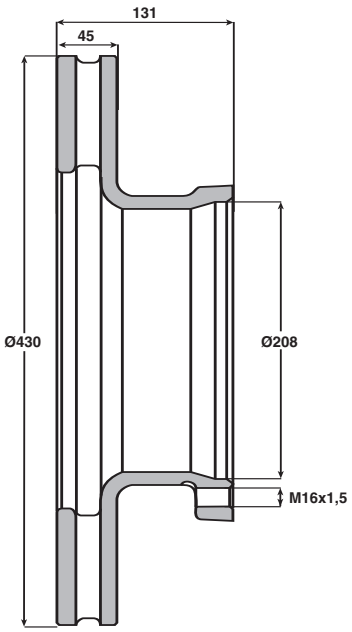

Scania



L p 382



S 4 P p 388



S 4 R p 390

S 4 T p 390



p 392

JURID / All rights reserved 2005

JURID by Honeywell





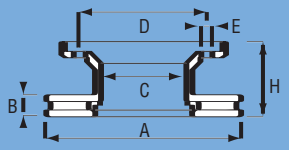

	A	B	B min	H	C	D	E1	E2	E3
567555J	438	45	37	135	195	235	10xM14x1.5		

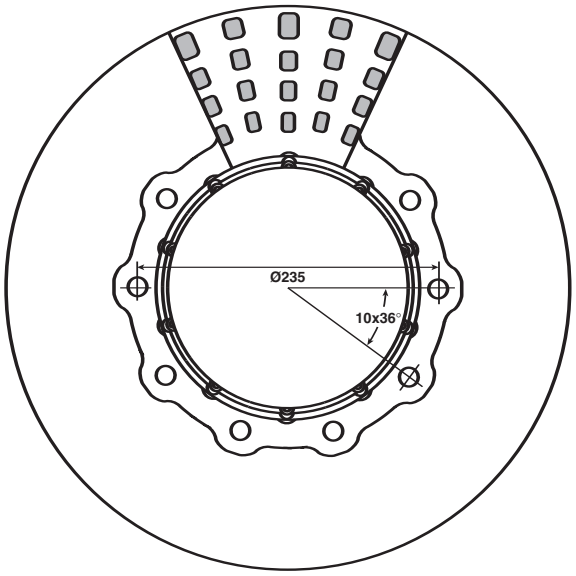

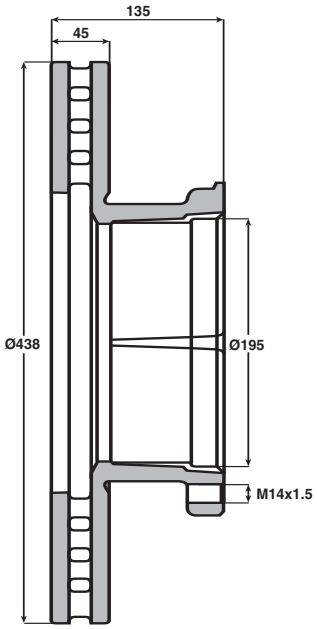

Mercedes Benz / Evobus



0350	p 282
0403	p 282
0404	p 282

	A	B	B min	H	C	D	E1	E2	E3
567560J	322	30	28	110	166	215	12xM12x1.75		

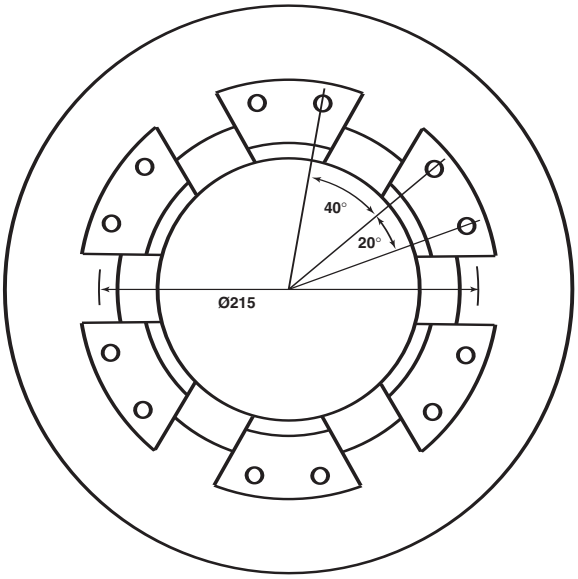

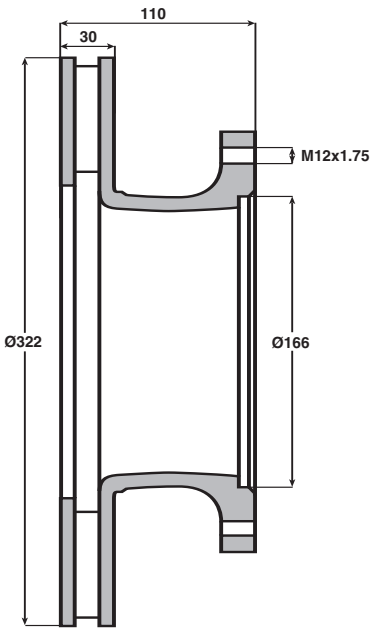

Metro Cammel Weymann p 292

JURID by Honeywell

© JURID / All rights reserved 2005





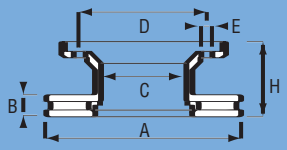

		A	B	B min	H	C	D	E1	E2	E3
567575J		378	45	42	150	225	275	8x24.25	2xM12x1.75	

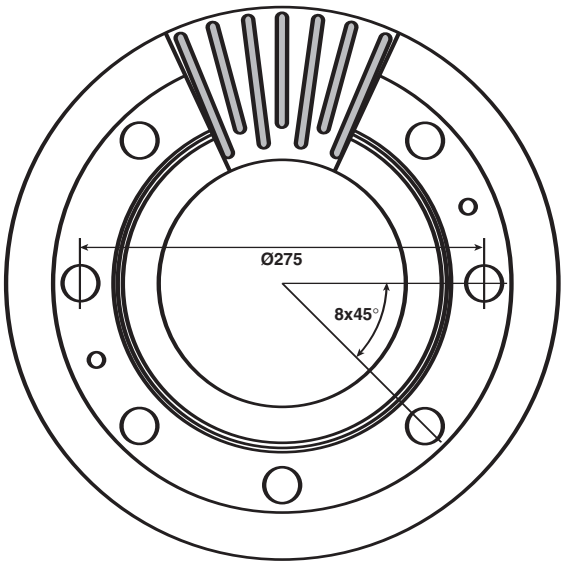

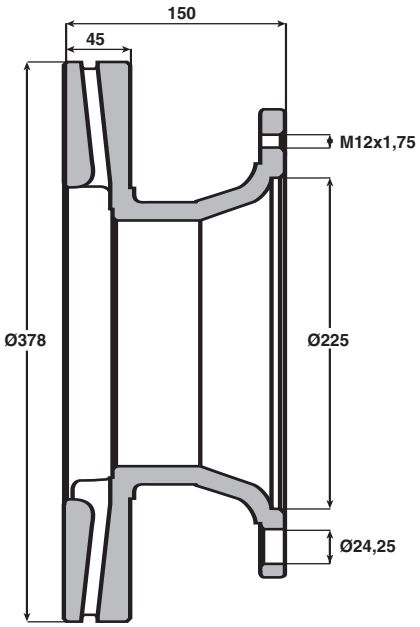

Meritor / ROR  p 292

		A	B	B min	H	C	D	E1	E2	E3
567751J		430	45	37	132,5	211	238	10xM14x1.5		

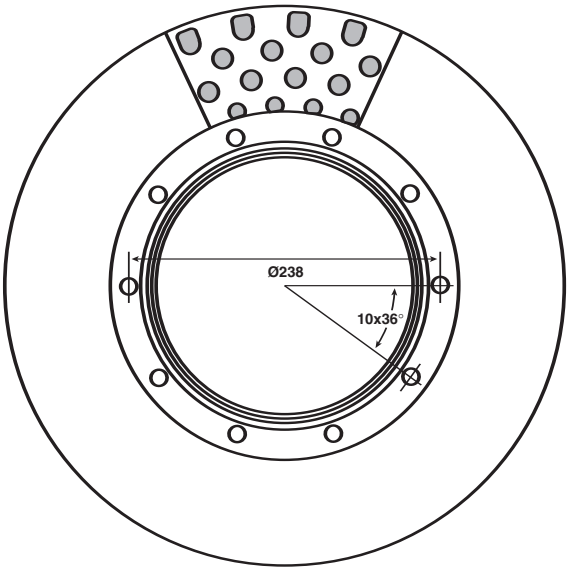

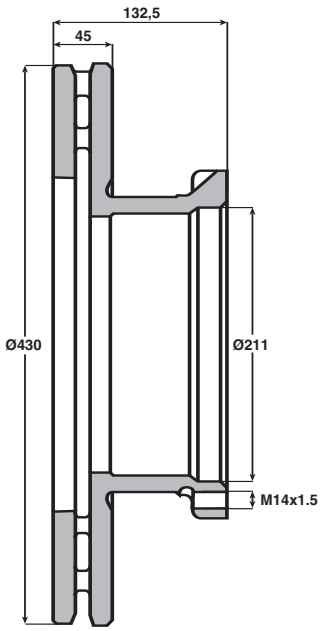

Hendrickson			p 80
Mercedes Benz		Actros	p 202, 204
		Atego	p 206
		Axor	p 208
Mercedes Benz / Evobus		O100	p 276
		O520/O530/O550/O580	p 284, 286

JURID / All rights reserved 2005

JURID by Honeywell



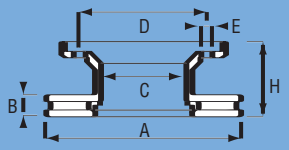

	A	B	B min	H	C	D	E1	E2	E3
567760J	276	22	19	76	85	130	5x15	1x9/17	

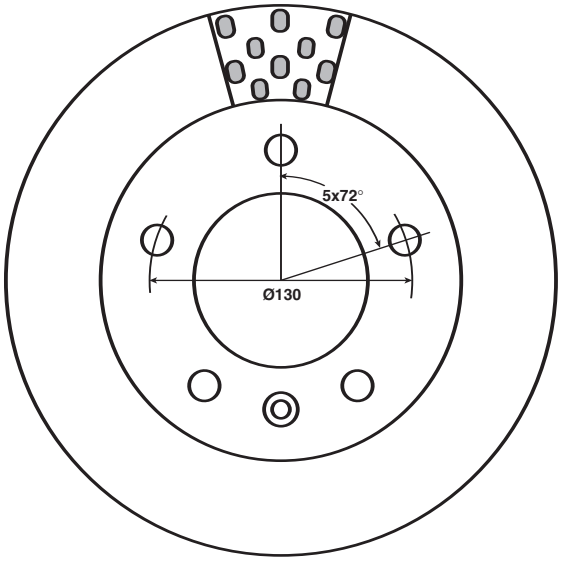

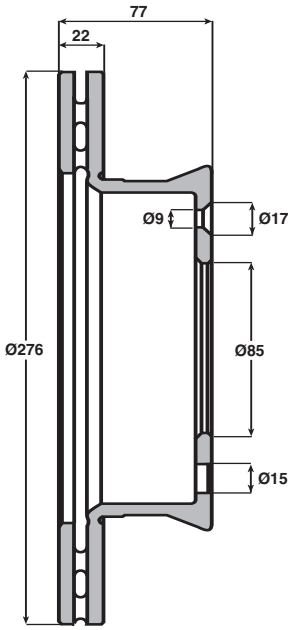

Mercedes Benz		Sprinter	p 196, 198
Volkswagen		LT	p 414

	A	B	B min	H	C	D	E1	E2	E3
567761J	272	16	14	96	85	130	5x15	1x9/17	

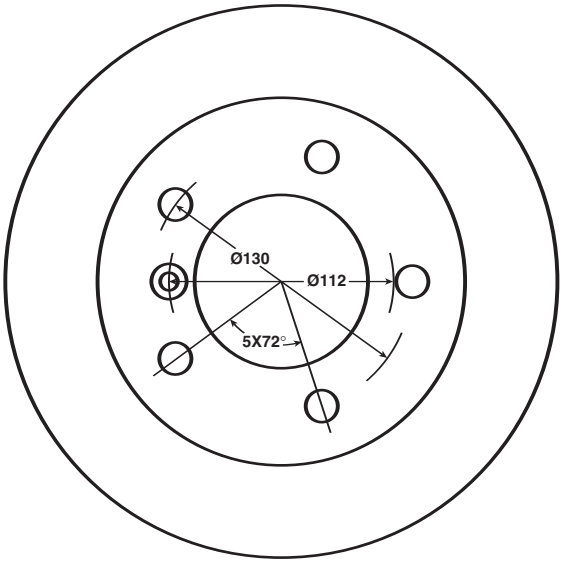

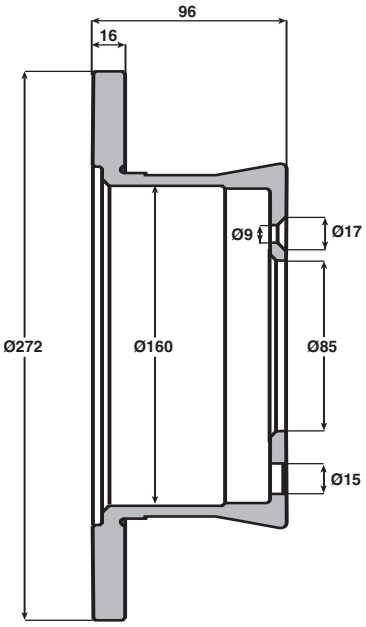

Mercedes Benz		Sprinter	p 198
Volkswagen		LT	p 414

JURID by Honeywell

JURID / All rights reserved 2005





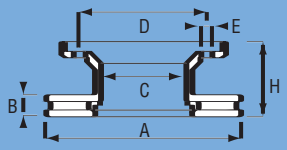

	A	B	B min	H	C	D	E1	E2	E3

567762J



324	30	26	91	118	140	6xM12x1.5

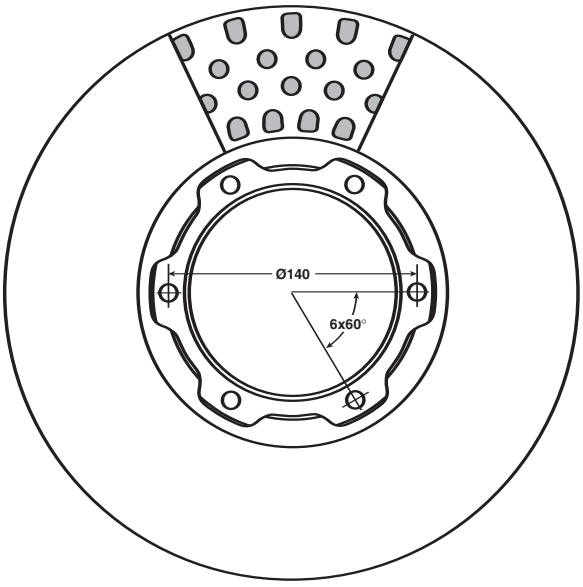

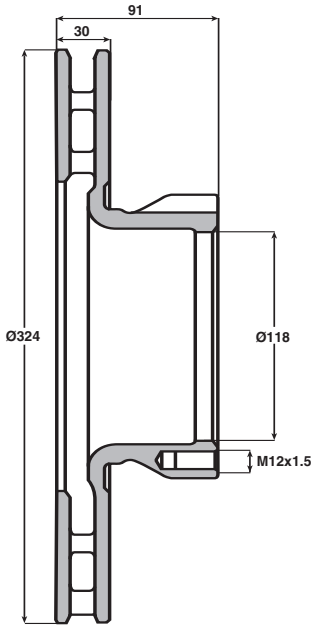

Mercedes Benz		Vario Plus	p 200
Mercedes Benz / Evobus		O812	p 286
		O814	p 286

567763J



324	30	26	120,5	108	192	6xM12x1.5

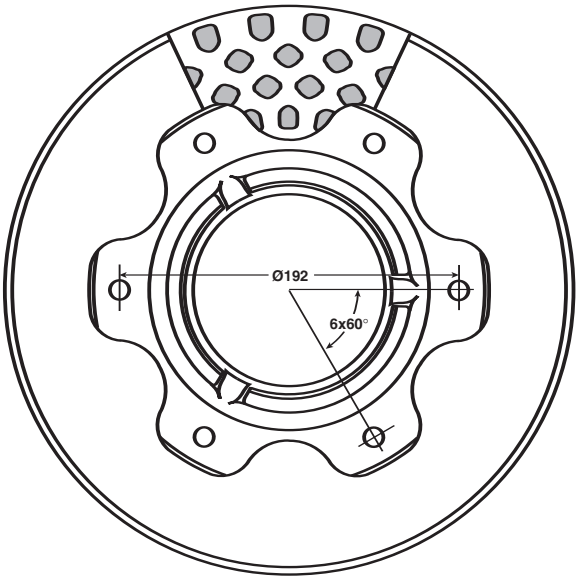

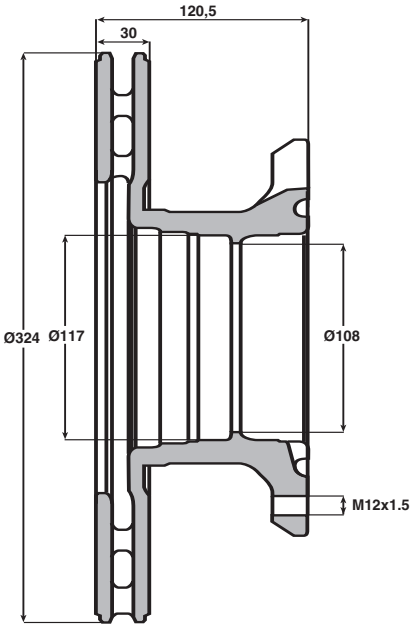

Mercedes Benz		Vario Plus	p 200
Mercedes Benz / Evobus		O812	p 286
		O814	p 286

JURID / All rights reserved 2005

JURID by Honeywell

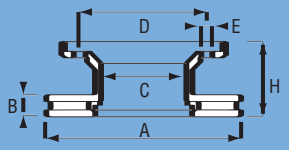

	A	B	B min	H	C	D	E1	E2	E3
567764J	335	34	28	102,5	91,5	120	10x14.5		

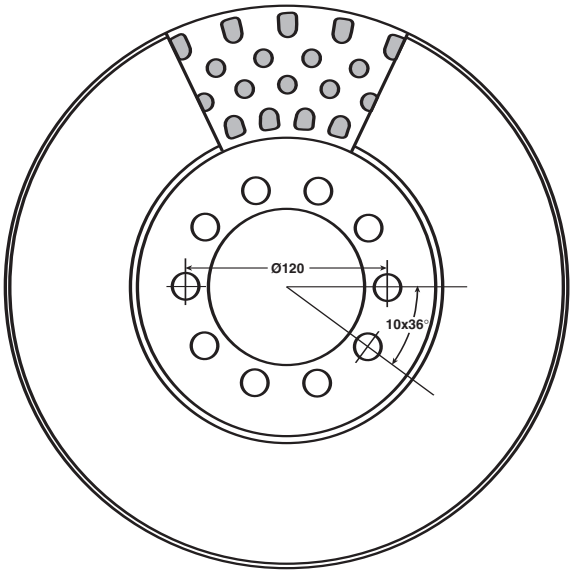

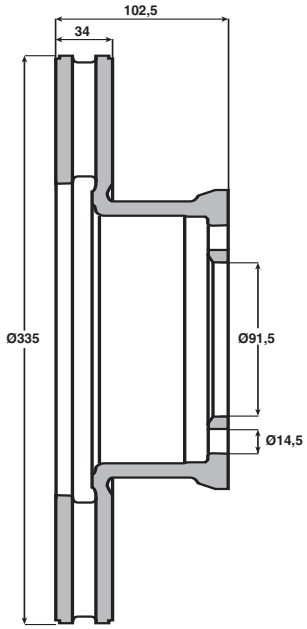

Mercedes Benz Atego p 206

	A	B	B min	H	C	D	E1	E2	E3
567765J	377	45	37	138,5	176	201	8xM14x1.5		

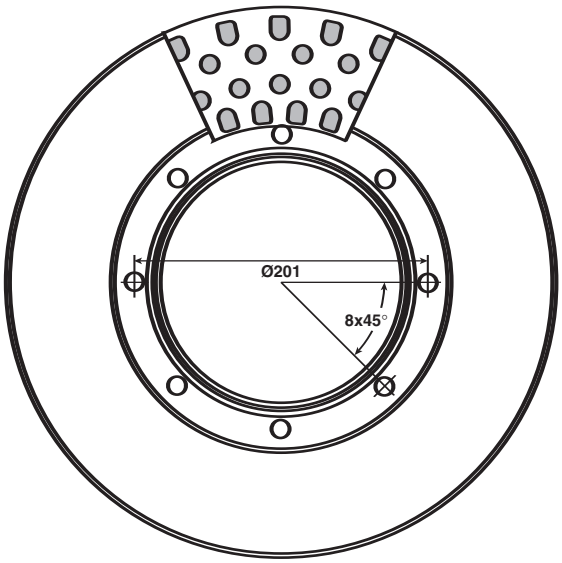

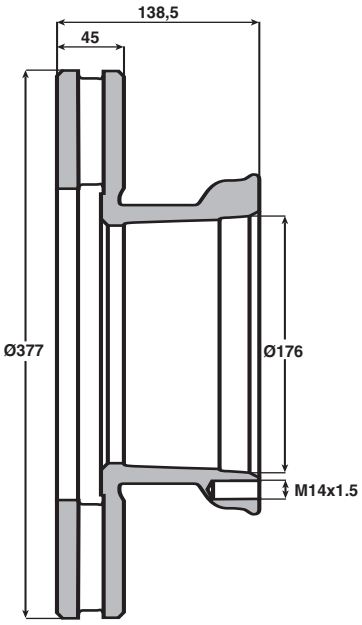

Mercedes Benz Atego p 206

JURID by Honeywell

© JURID / All rights reserved 2005





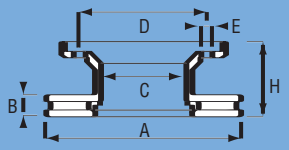

		A	B	B min	H	C	D	E1	E2	E3
567766J		377	45	37	134	105,6	138	14x14.5		

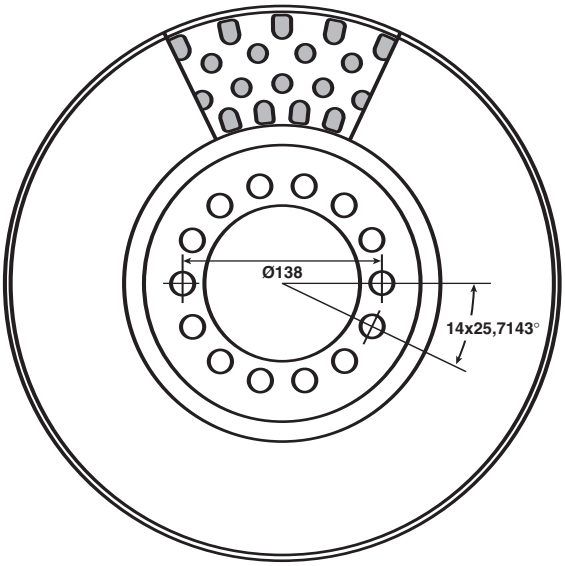

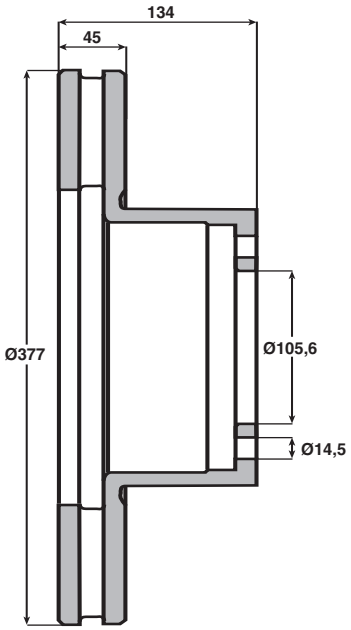

Mercedes Benz  Atego p 204

567767J		335	34	28	111	152	177	8xM12x1.5		

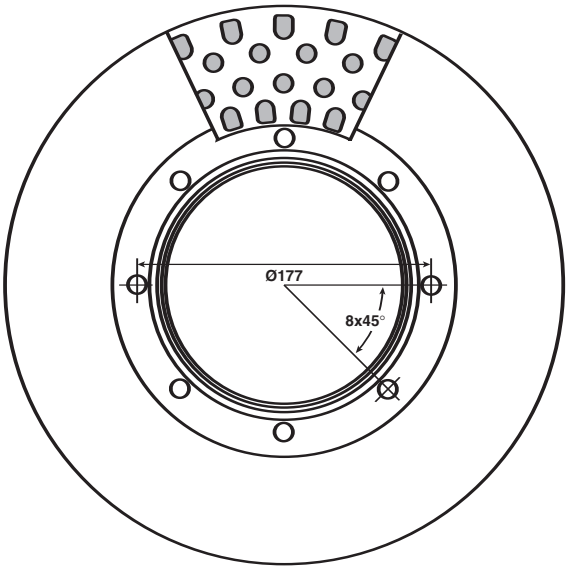

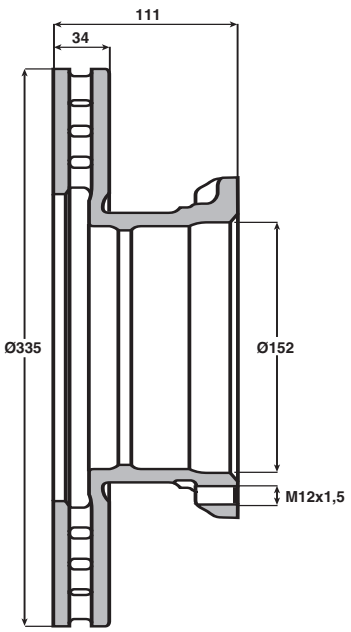

Mercedes Benz  Atego p 206

JURID / All rights reserved 2005

JURID by Honeywell





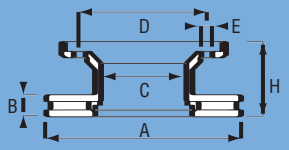

		A	B	B min	H	C	D	E1	E2	E3
567768J		335	34	28	111	145	177	8xM12x1.5		

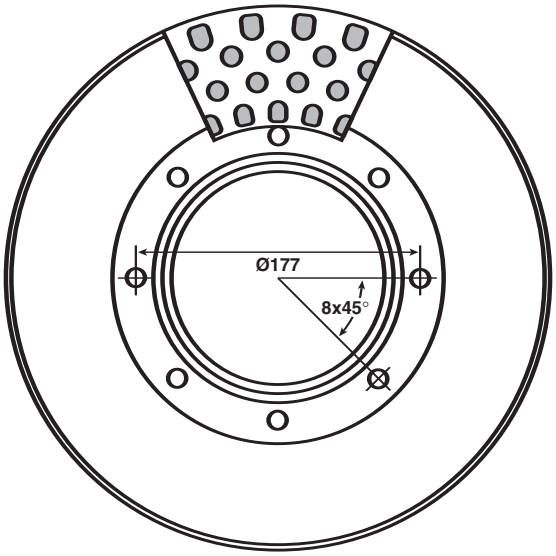

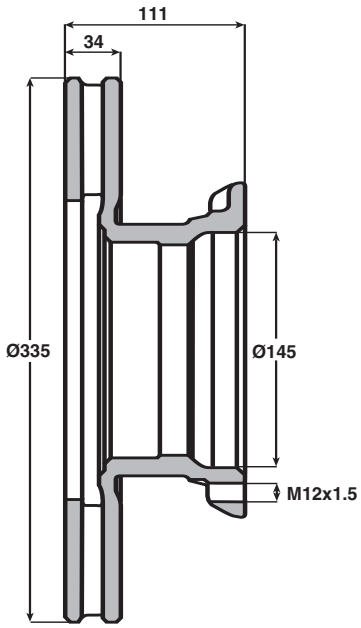

Mercedes Benz		Atego	p 206

		A	B	B min	H	C	D	E1	E2	E3
567769J		304	30	26	120	157	192	6xM12x1.5		

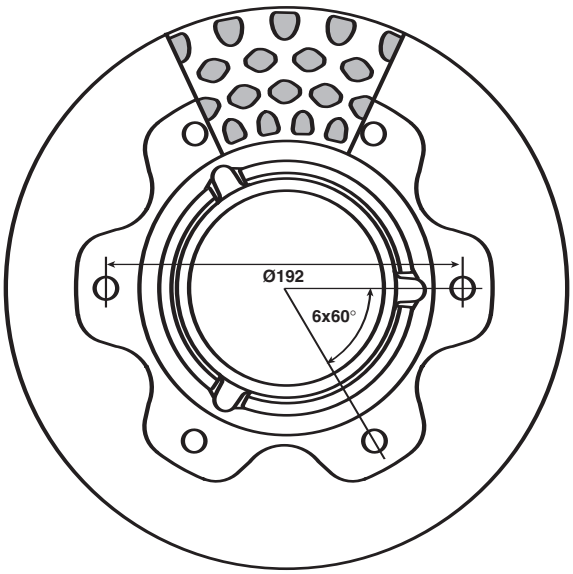

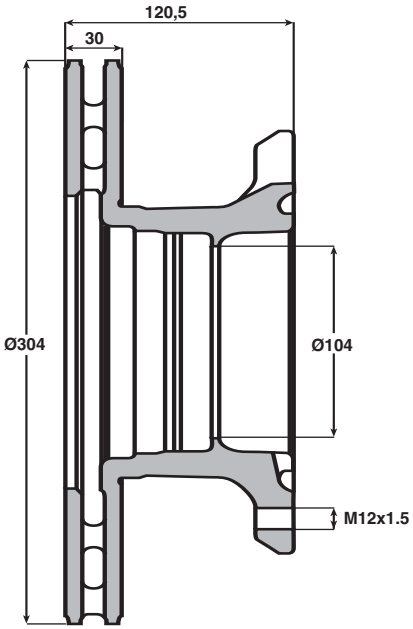

Mercedes Benz		Vario Plus	p 200
Mercedes Benz / Evobus		O812	p 286
		O814	p 286

JURID / All rights reserved 2005

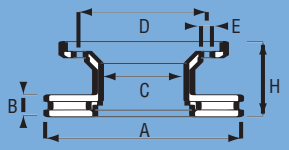

	A	B	B min	H	C	D	E1	E2	E3
567770J	304	30	26	91	118	140	6xM12x1.5		

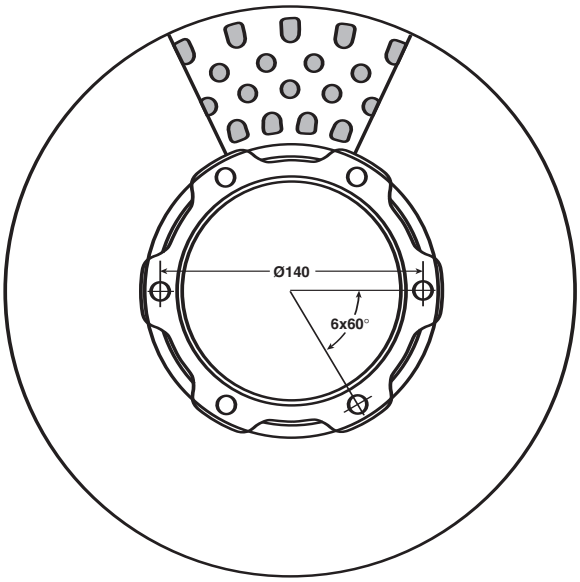

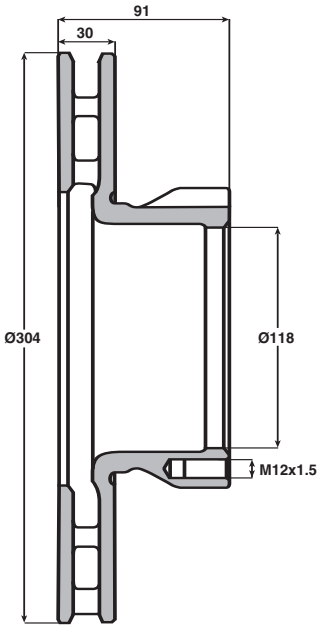

Mercedes Benz	Vario Plus	p 200

	A	B	B min	H	C	D	E1	E2	E3
567771J	258	12	10	96	85	130	5x15	1x9/17	

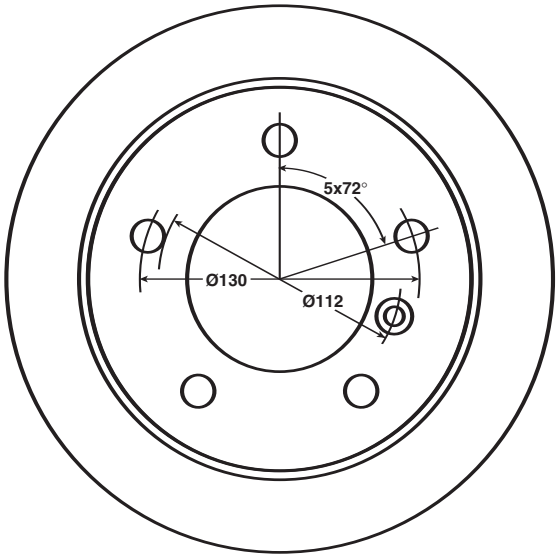

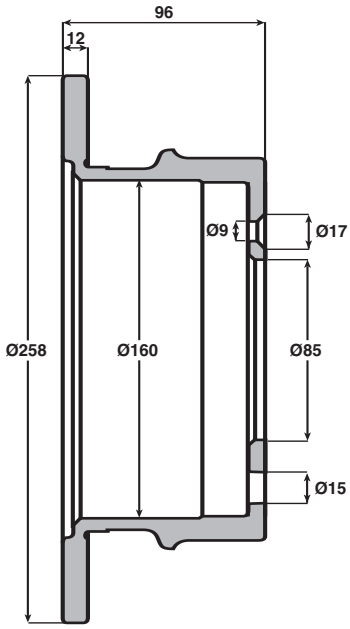

Mercedes Benz	Sprinter	p 196, 198
Volkswagen	LT	p 414

JURID / All rights reserved 2005

JURID by Honeywell

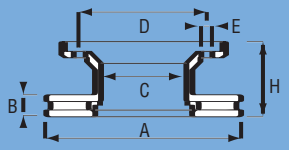

	A	B	B min	H	C	D	E1	E2	E3
567776J	324	30	26	111,5	184	205	6xM12x1.5		

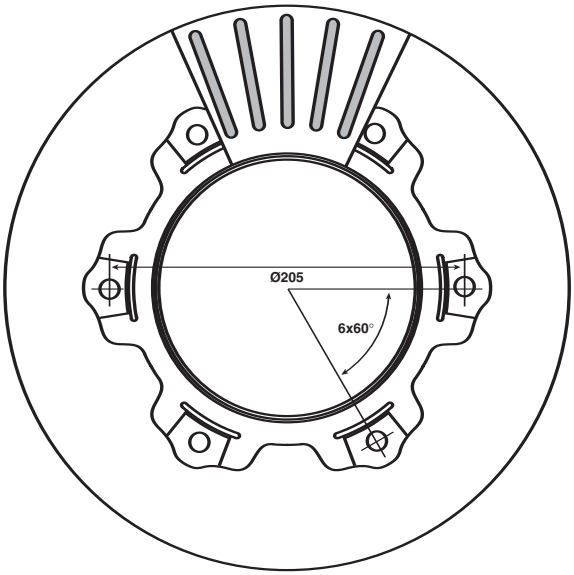

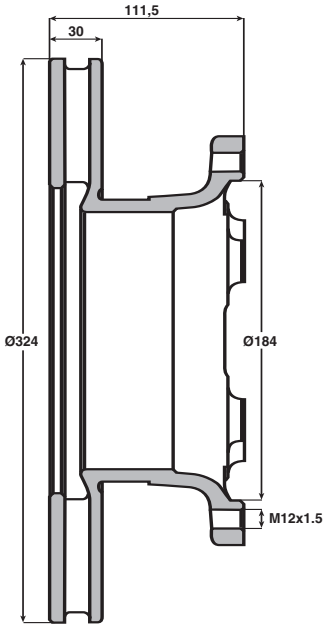

Mercedes Benz

Vario Plus	p 200
T 2	p 272

	A	B	B min	H	C	D	E1	E2	E3
567800J	430	45	37	130,5	200	235	10xM16x1.5		

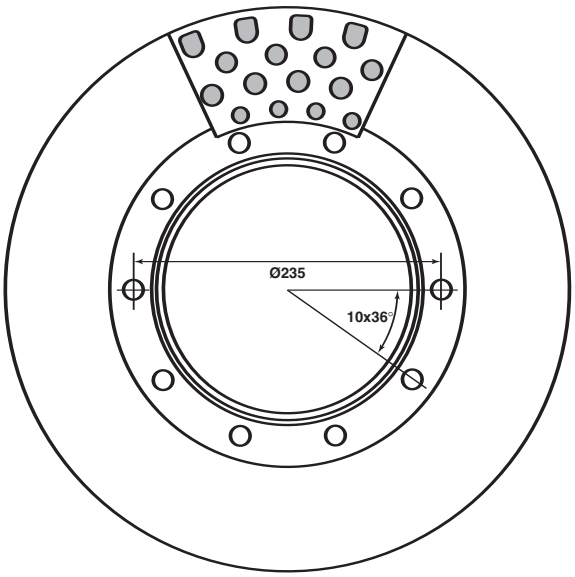

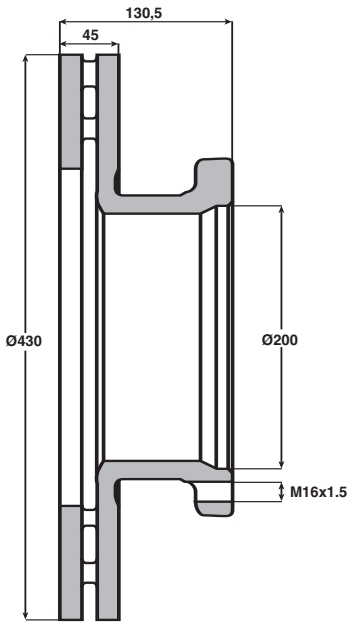

Bova

Futura	p 18

Neoplan

Cityliner	p 296
Jetliner	p 296
Spaceliner	p 300
Transliner	p 300

JURID by Honeywell

© JURID / All rights reserved 2005





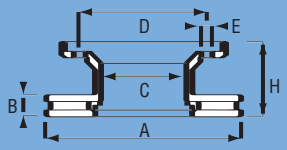

	A	B	B min	H	C	D	E1	E2	E3
567801J	430	45	37	131	203	235	10xM16x1.5		

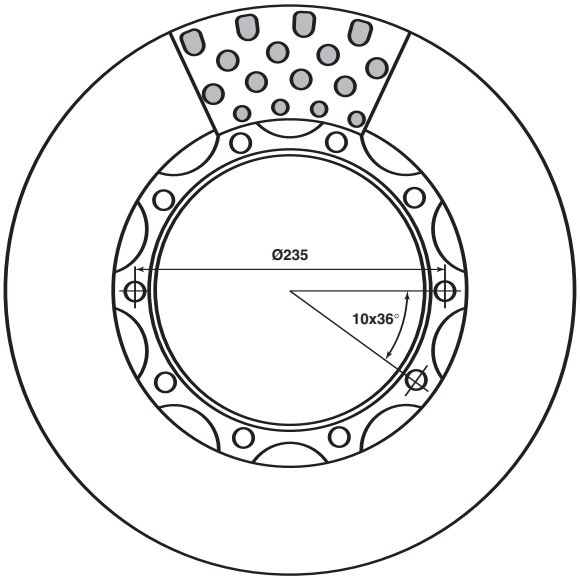

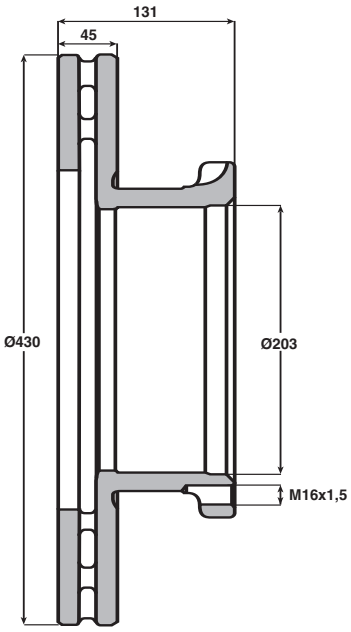

Bova	Futura		p 18
Kassbohrer / Setra			p 134
Mercedes Benz / Evobus	Niederflur		p 276
Neoplan	Niederflurbusse		p 298
	Skyliner		p 300
ZF			p 448

	A	B	B min	H	C	D	E1	E2	E3
567802J	410	48	38	120	162	185	12xM16x1.5		

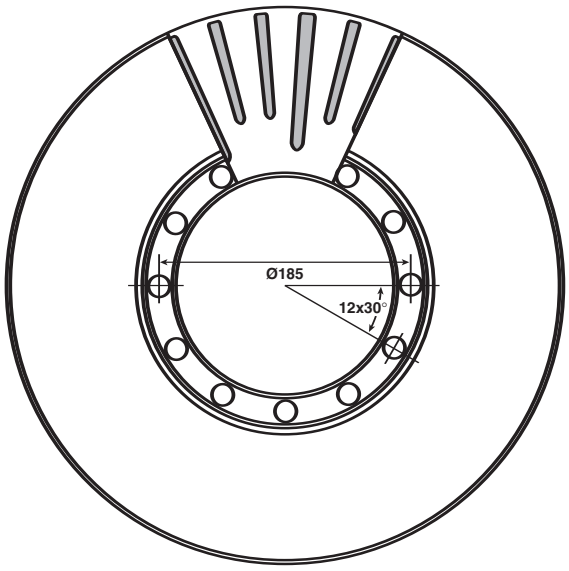

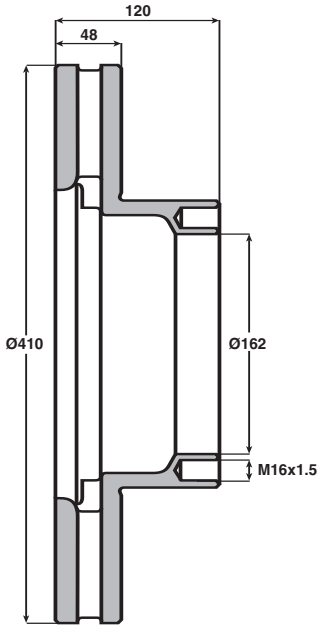

Van Hool		p 410

JURID / All rights reserved 2005

JURID by Honeywell





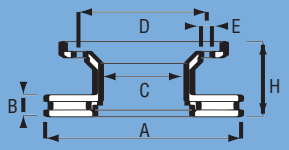

	A	B	B min	H	C	D	E1	E2	E3
567803J	315	35	26	148,5	170	245	6x18.45	2xM10	

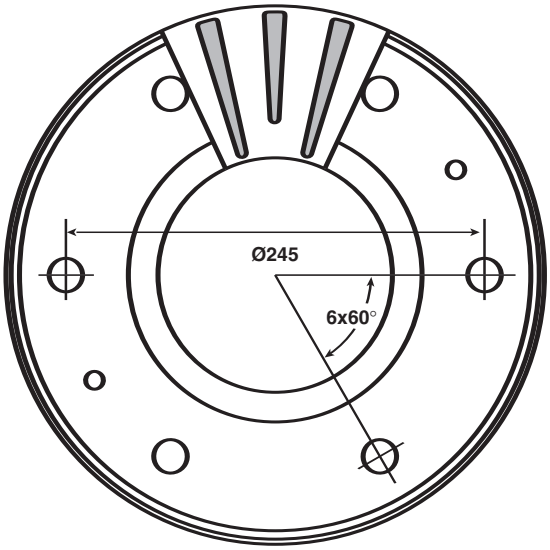

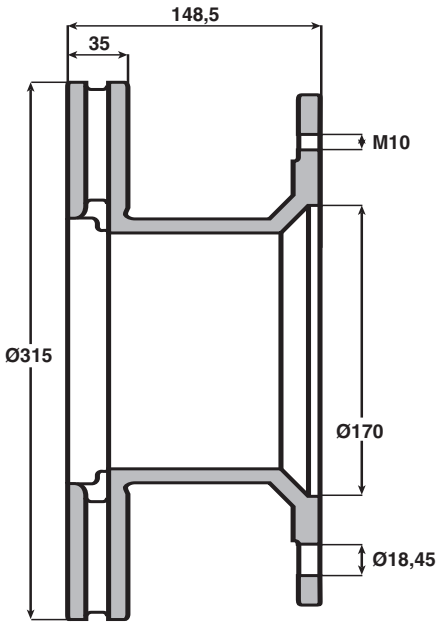

Neoplan  Jetliner p 298

	A	B	B min	H	C	D	E1	E2	E3
567805J	374	22	20,5	22	60,1	108	10x16.5		

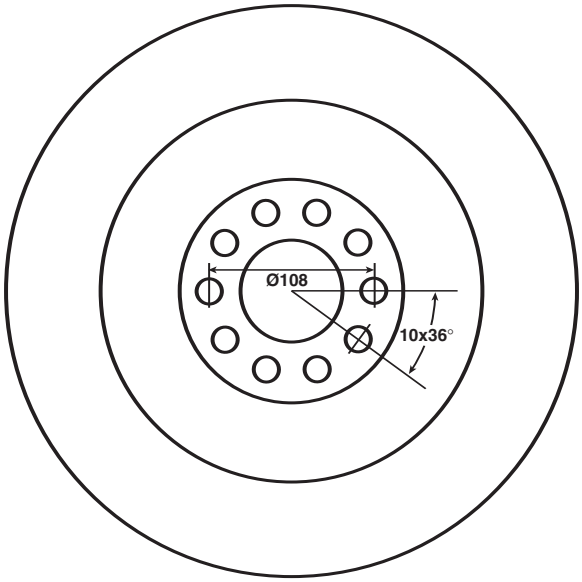

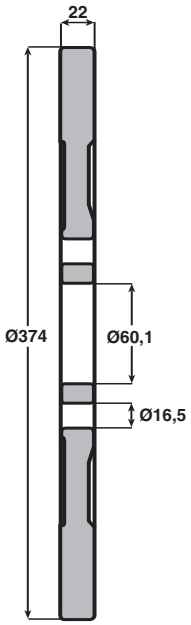

Mercedes Benz  Unimog p 274

JURID by Honeywell

© JURID / All rights reserved 2005

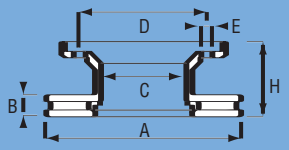

		A	B	B min	H	C	D	E1	E2	E3
567806J		380	30	25	64	148	180	8xM16x1.5		

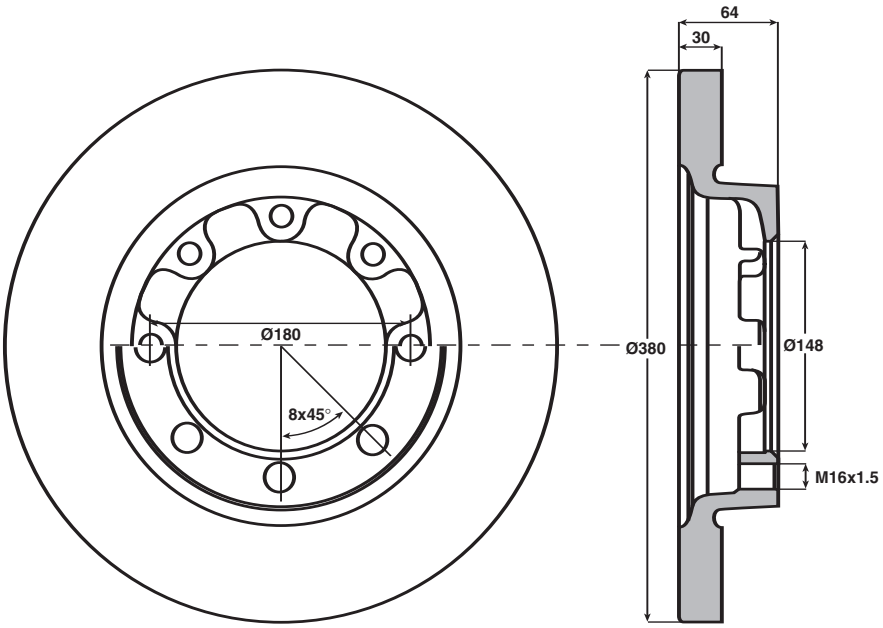

Mercedes Benz		Unimog	p 274

		A	B	B min	H	C	D	E1	E2	E3
567810J		285	22	19	93	120	145	6x15		

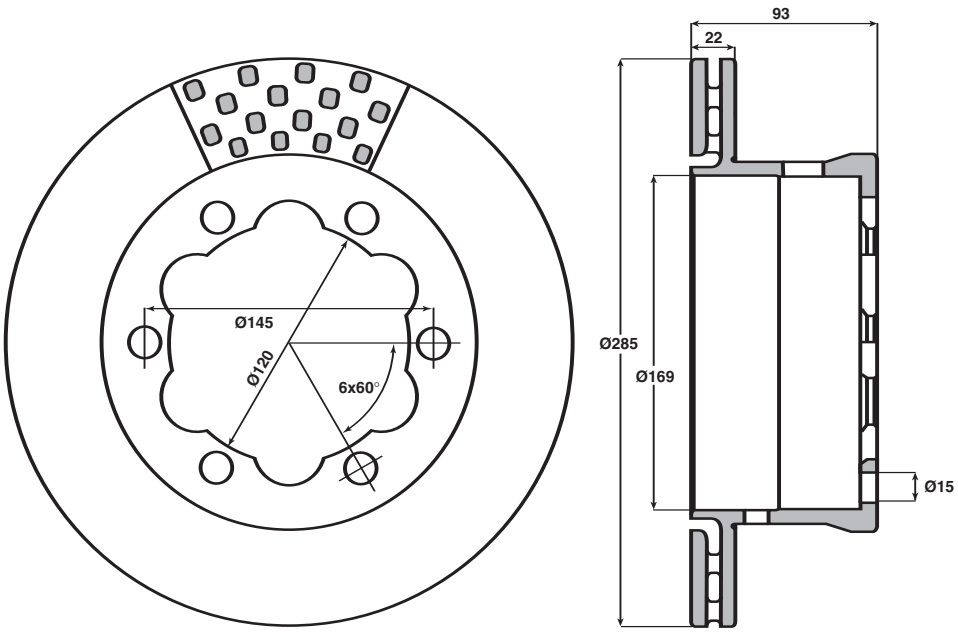

Mercedes Benz		Sprinter	p 198
		Vario Plus	p 200

JURID / All rights reserved 2005





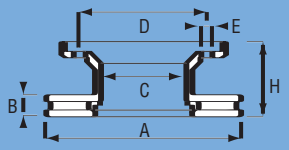

	A	B	B min	H	C	D	E1	E2	E3
567812J	375	44	40	128	155	185	10xM14		

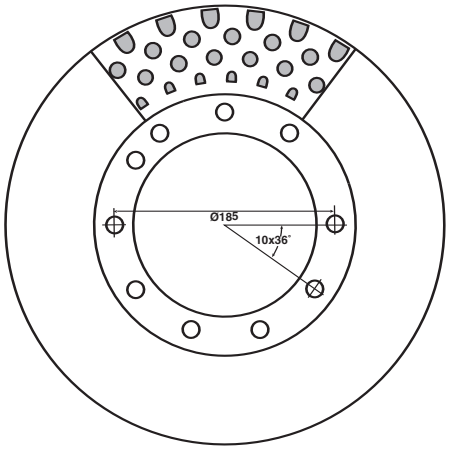

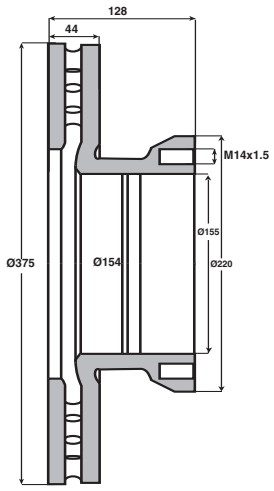

Daf		55	p 42
Leyland / DAF		FA55	p 144

567948J	276	24	22	44	95	114	10x10.5		

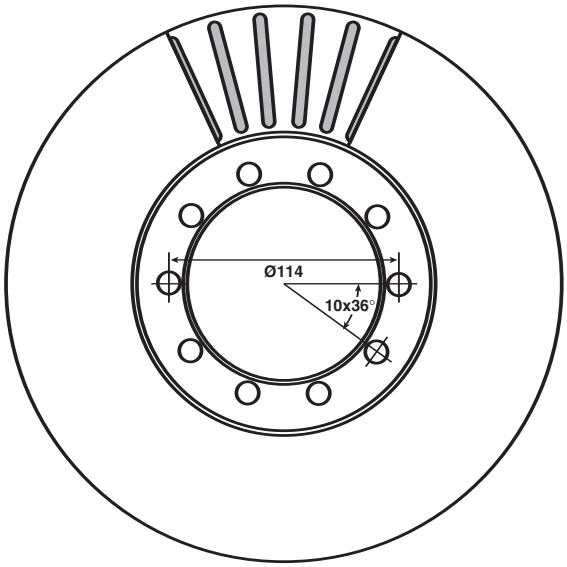

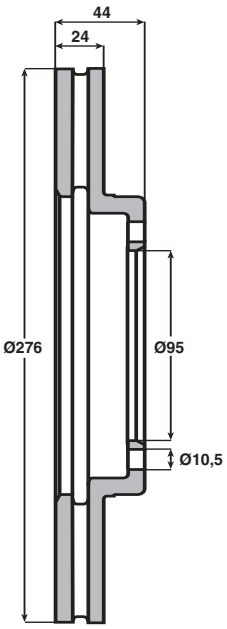

Renault Trucks (Renault VI)		Messenger / B	p 340

JURID by Honeywell

© JURID / All rights reserved 2005





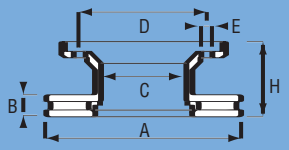

	A	B	B min	H	C	D	E1	E2	E3
567949J	354	30	26	82	128	151	10x12.2		

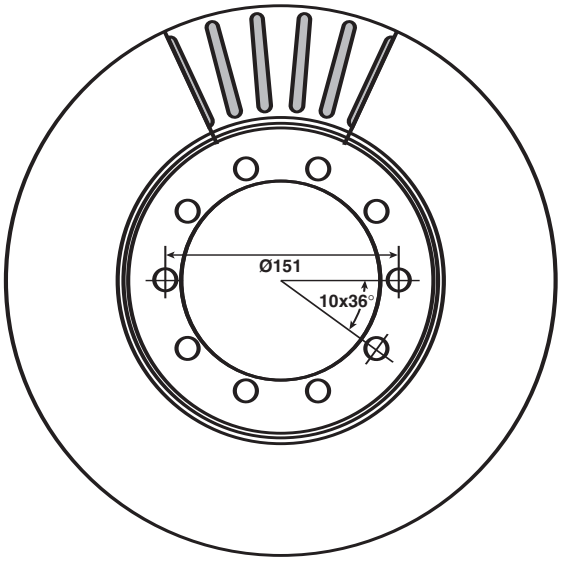

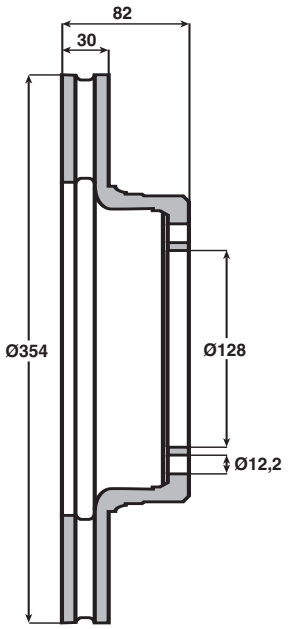

Renault Trucks (Renault VI)



Maxter / G	p 354
Midliner / M	p 354, 356
Midliner / S	p 356, 358

	A	B	B min	H	C	D	E1	E2	E3
567950J	350	30	26	73	145	165	16x12.5		

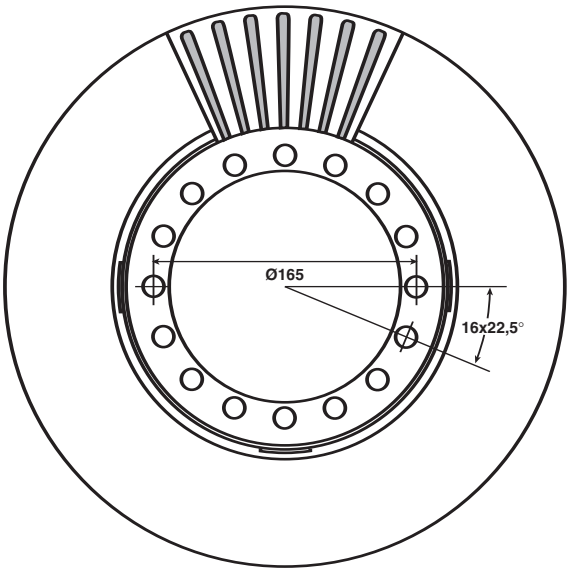

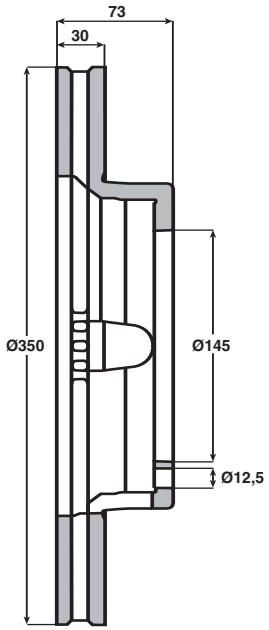

Menarini p 196

Renault Trucks (Renault VI) p 363

JURID / All rights reserved 2005

JURID by Honeywell

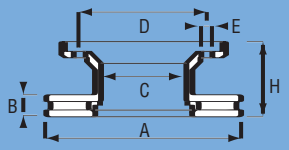

	A	B	B min	H	C	D	E1	E2	E3
567951J	400	42	39	90	175	197	12x12.5		

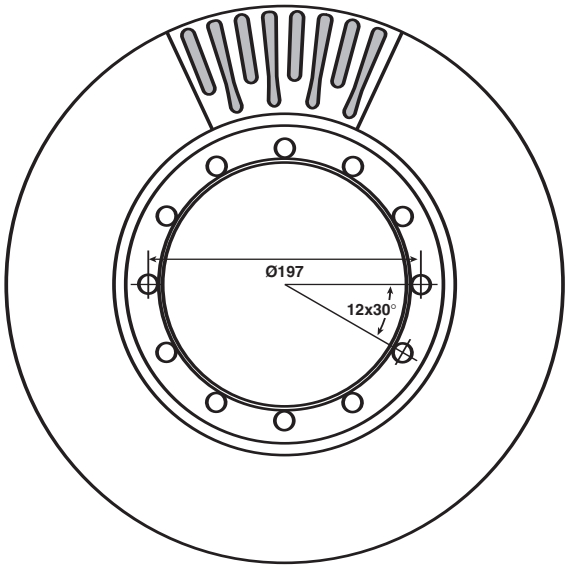

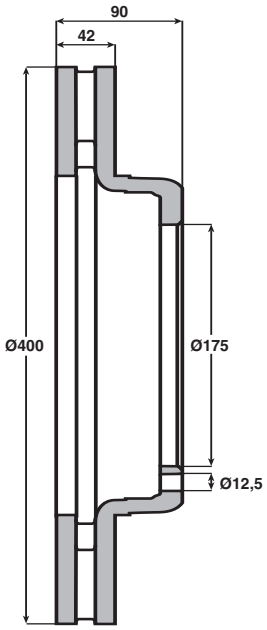

Renault Trucks (Renault VI) p 363

	E2	E3
567952J	440	45	35	100	131	165	10x17	2xM14x2

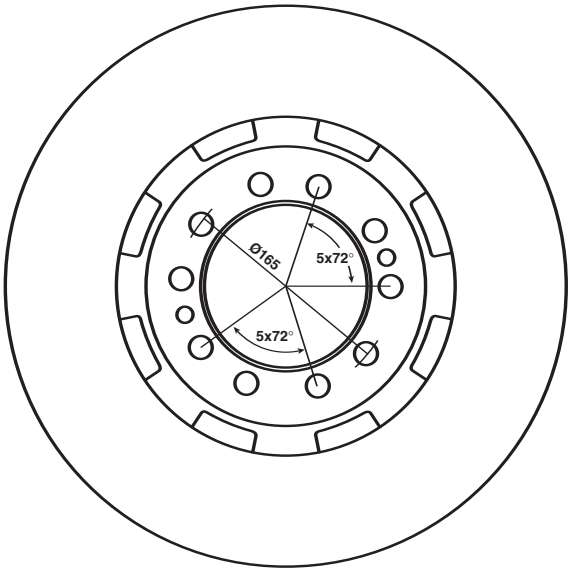

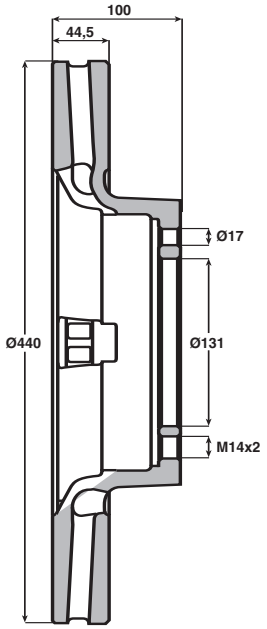

Dennis p 54
Renault Trucks (Renault VI)
Magnum / AE p 342, 344
Major / R p 346, 348, 350
Manager / G p 352

JURID by Honeywell

© JURID / All rights reserved 2005





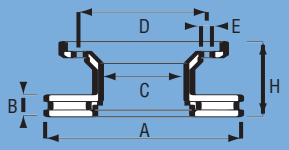

	A	B	B min	H	C	D	E1	E2	E3
567953J	438	45	35	97	131	165	10x17	2xM14x2	

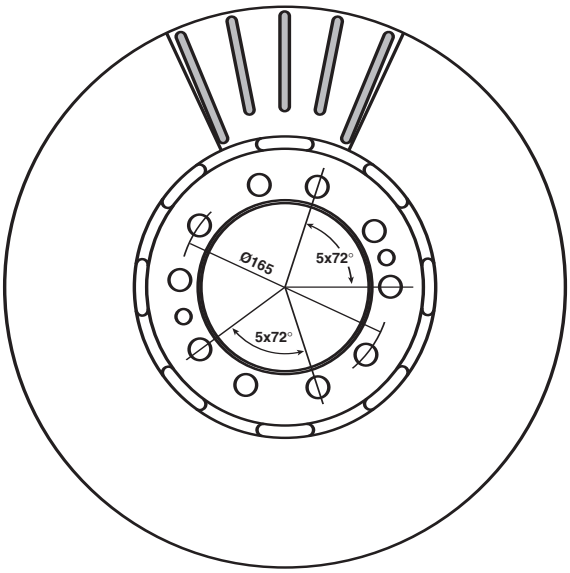

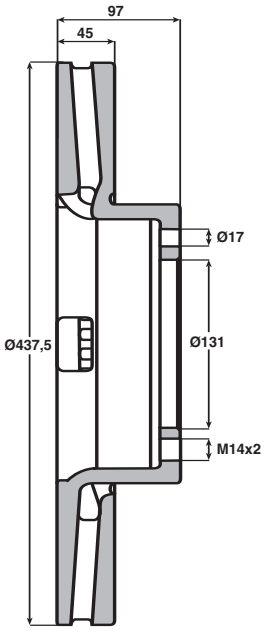

Heuliez			p 80
Renault Trucks (Renault VI)		Magnum / AE	p 342, 344
		Major / R	p 348
		Manager / G	p 352, 354
		Midlum / Premium	p 360, 362
			p 363

	A	B	B min	H	C	D	E1	E2	E3
567954J	276	24	22	44	102	120	10x10.5		

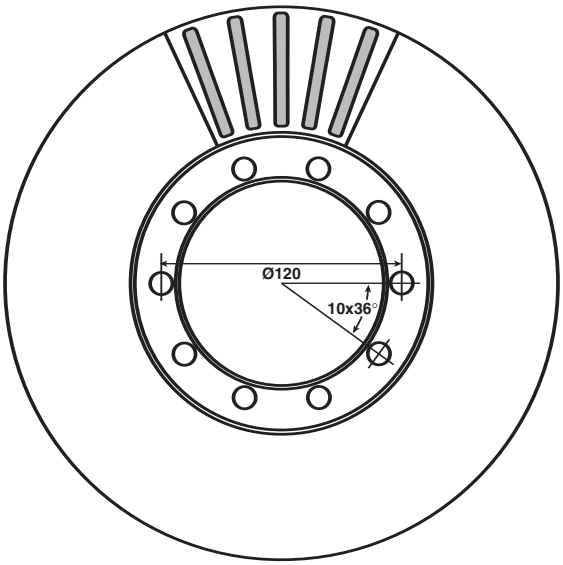

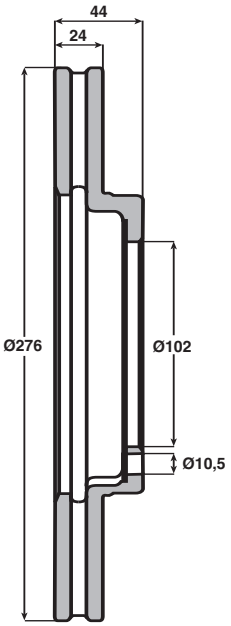

Renault Trucks (Renault VI)		Messenger / B	p 340

JURID / All rights reserved 2005

JURID by Honeywell





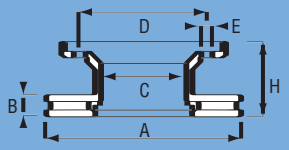

	A	B	B min	H	C	D	E1	E2	E3
567955J	304	30	26	134,75	250	205	6x21		

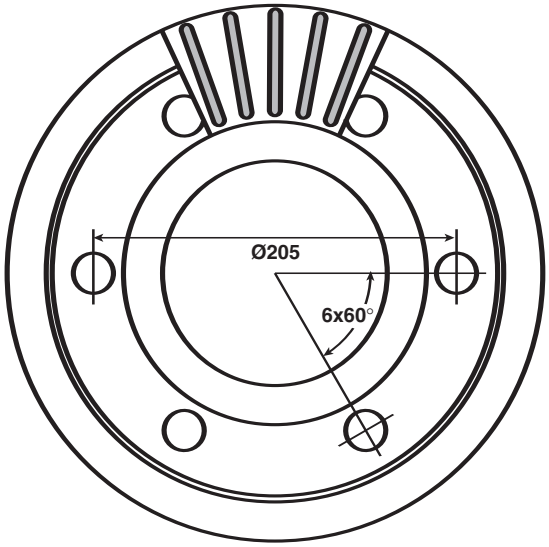

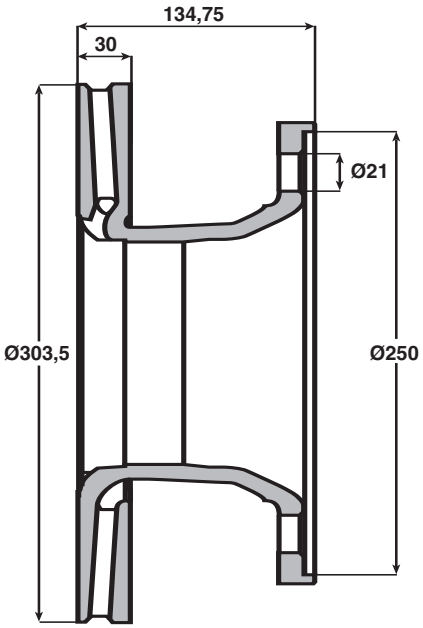

Renault Trucks (Renault VI)  Midliner / S p 356, 358

	A	B	B min	H	C	D	E1	E2	E3
567956J	322	30	27	140	290	245	6x21		

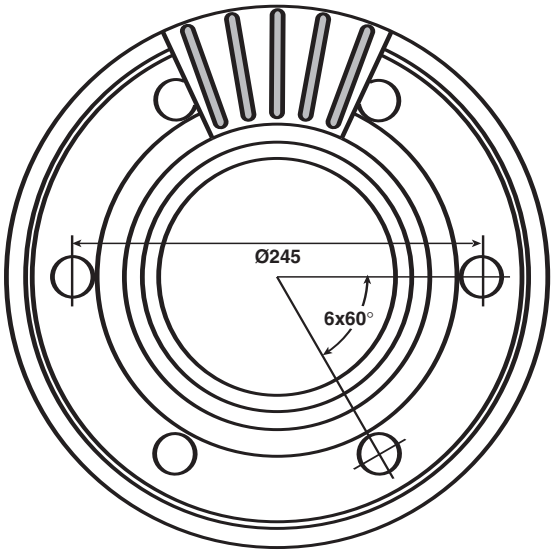

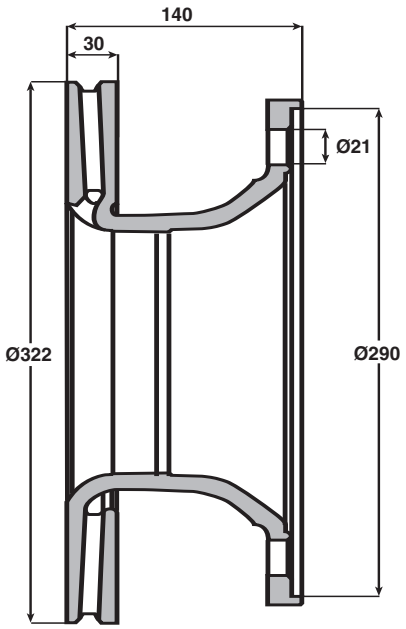

Renault Trucks (Renault VI)  Midliner / S p 358

JURID by Honeywell

JURID / All rights reserved 2005



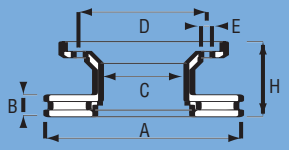

		A	B	B min	H	C	D	E1	E2	E3
567957J		378	45	42	150	222	250	10xM16		

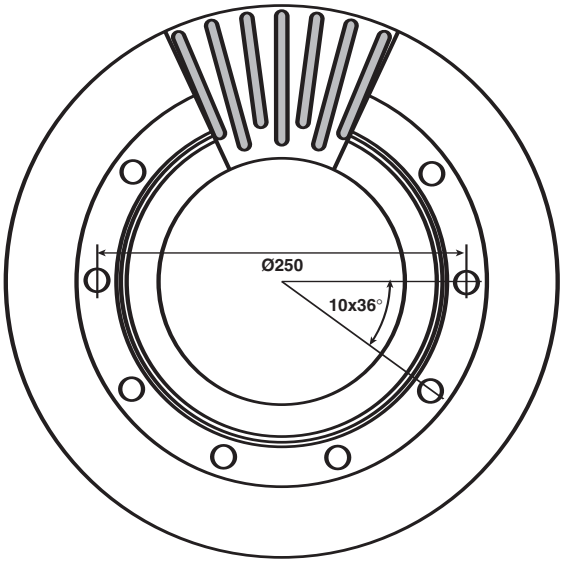

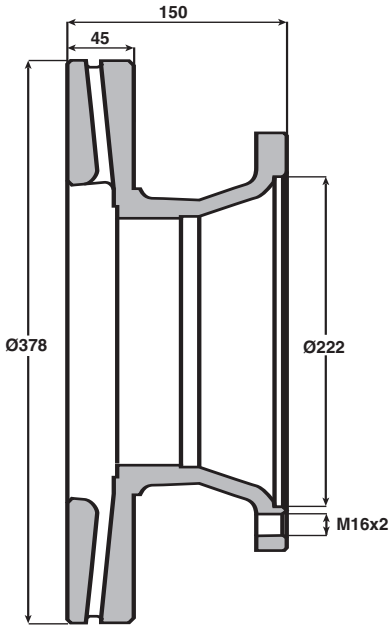

Meritor / ROR  p 290

		A	B	B min	H	C	D	E1	E2	E3
567958J		380	44	40	85	117	144	10xM14		

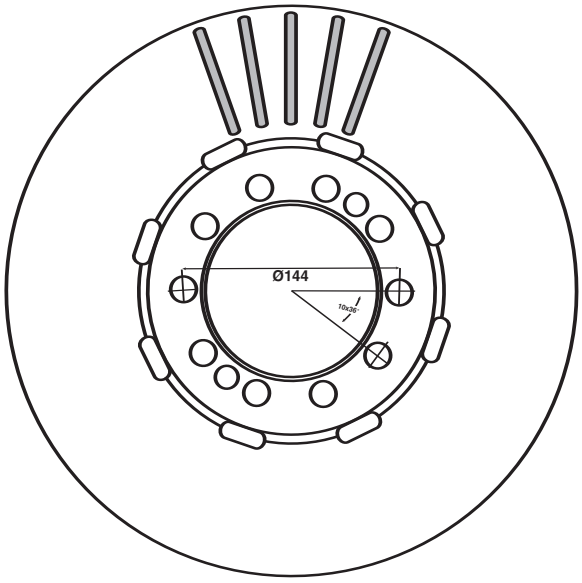

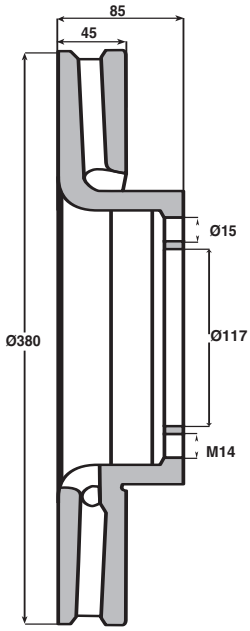

Renault Trucks (Renault VI)  Midliner / M p 356

JURID / All rights reserved 2005





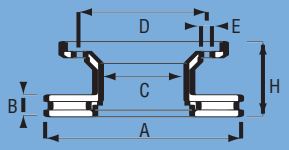

	A	B	B min	H	C	D	E1	E2	E3
569000J	430	45	37	161	190	335	10x22.75		

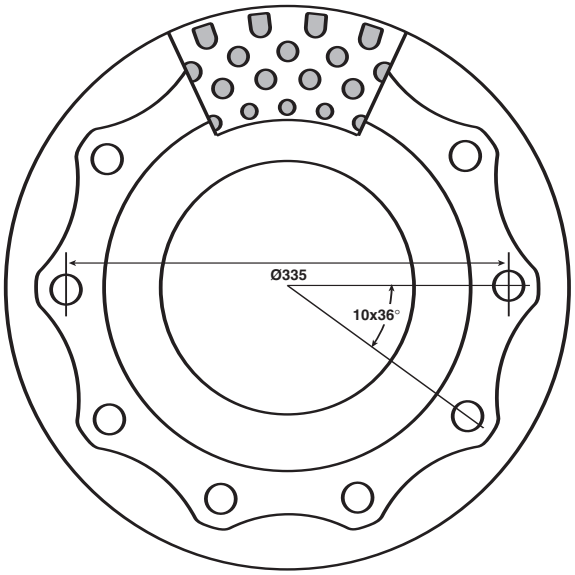

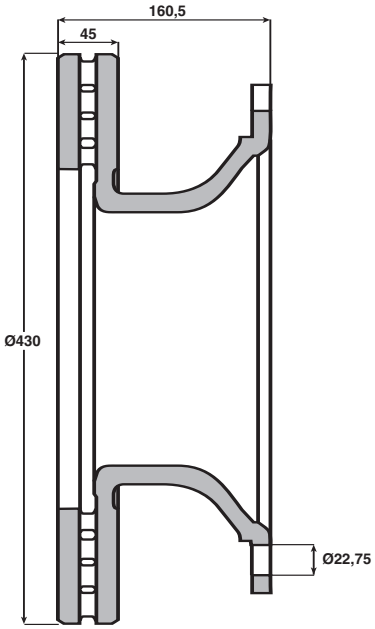

SAF Sauer p 376

569001J	430	45	37	130	131	168	12x19	3xM12x1.5	

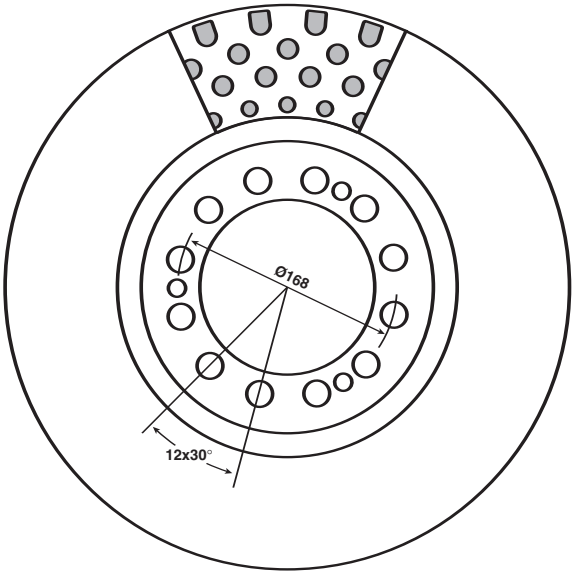

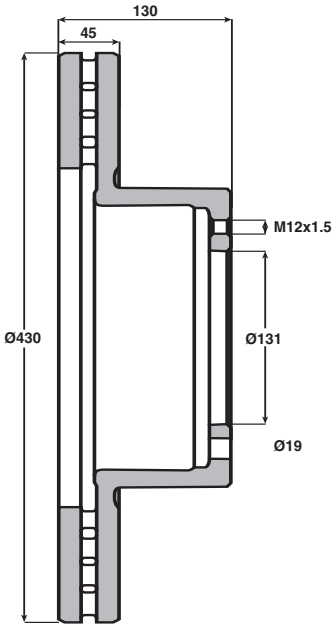

SAF Sauer p 376

JURID by Honeywell

JURID / All rights reserved 2005





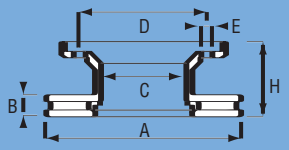

	A	B	B min	H	C	D	E1	E2	E3
569002J	377	45	37	157,5	169	275	8x23		

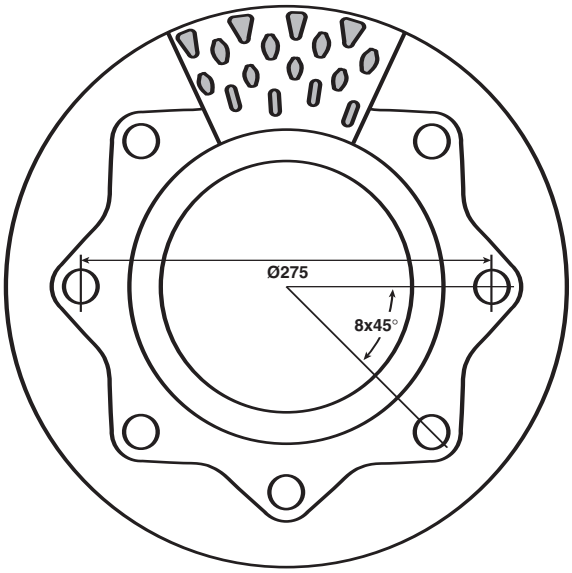

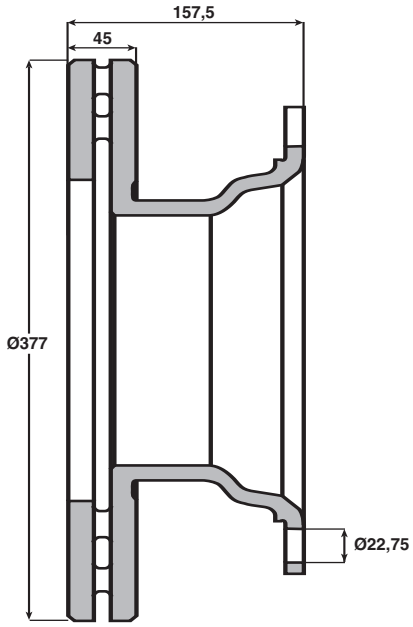

SAF Sauer p 376

569020J	430	45	37	160	290	335	10x23		

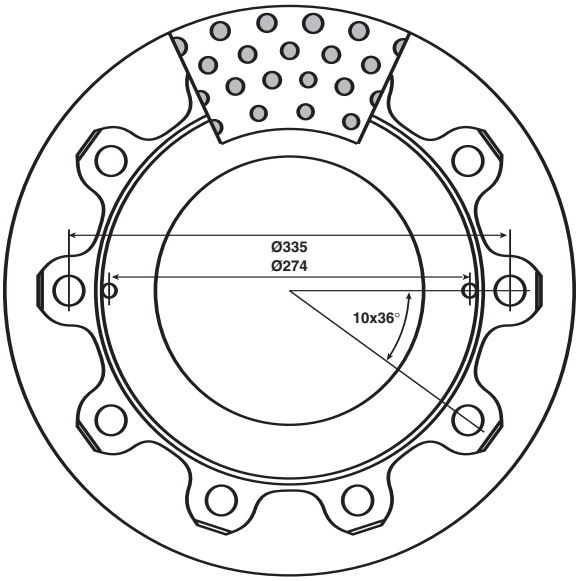

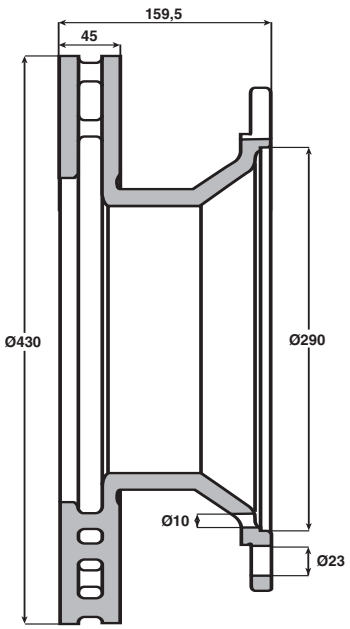

BPW p 20

JURID / All rights reserved 2005





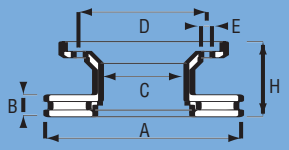

	A	B	B min	H	C	D	E1	E2	E3
569021J	430	45	37	160	290	335	10x23		

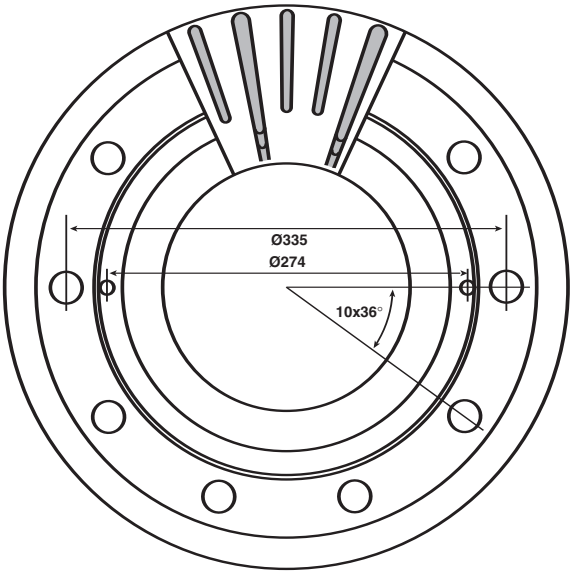

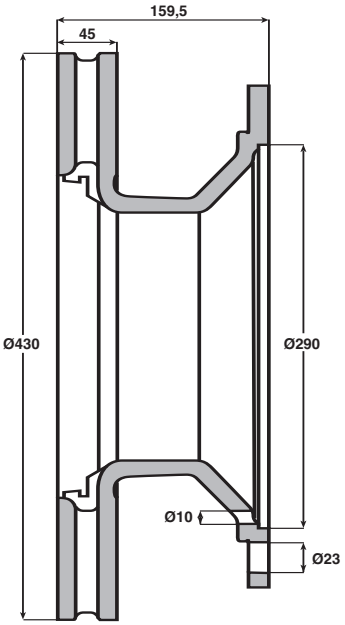

BPW p 20

	A	B	B min	H	C	D	E1	E2	E3
569022J	377	45	37	159,5	290	335	10x23		

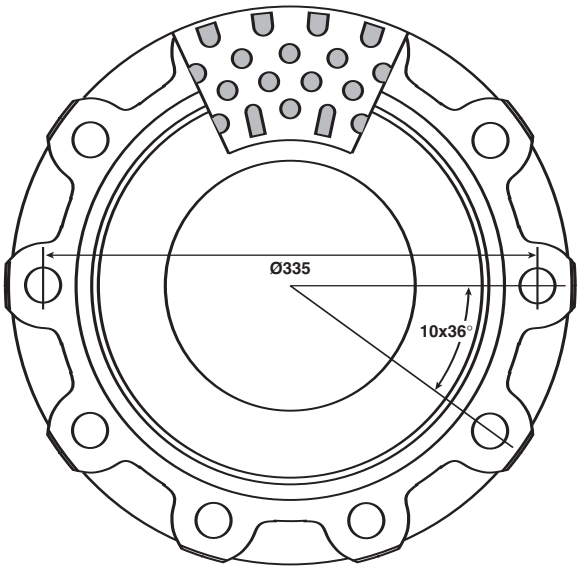

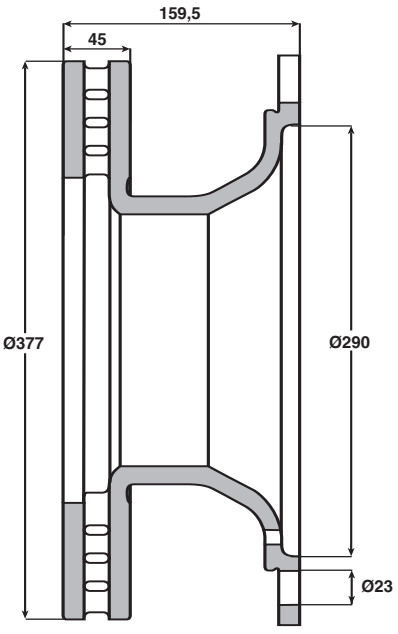

BPW p 20

JURID / All rights reserved 2005





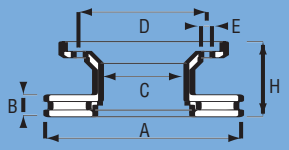

	A	B	B min	H	C	D	E1	E2	E3
569100J	430	45	37	155	280	335	10x26		

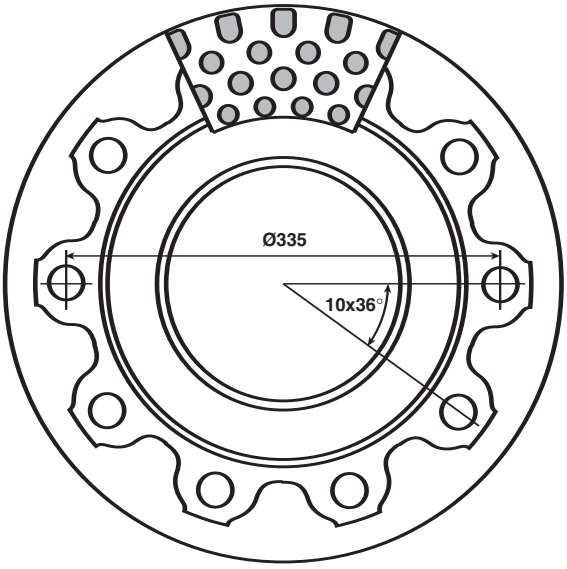

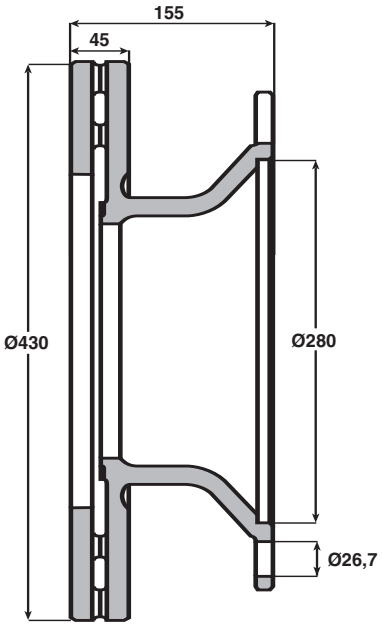

Crane Fruehauf		p 30
Fruehauf		p 76
SMB		p 396
Trailor		p 406

	A	B	B min	H	C	D	E1	E2	E3
569101J	290	22	19	42,5	102	120	10x10.8		

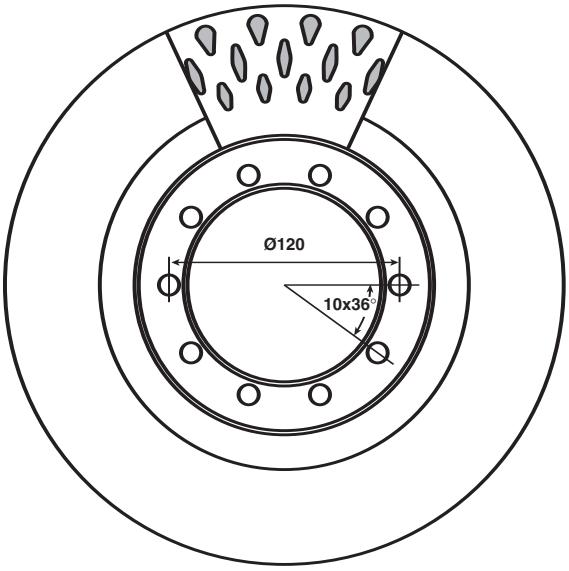

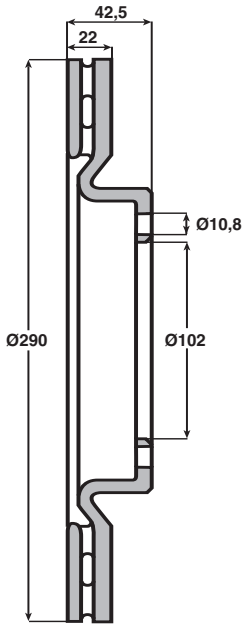

Renault Trucks (Renault VI)		Mascott	p 338

JURID / All rights reserved 2005

JURID by Honeywell





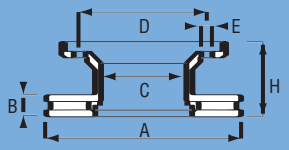

	A	B	B min	H	C	D	E1	E2	E3
569102J	290	26	23	42,5	102	120	10x10.8		

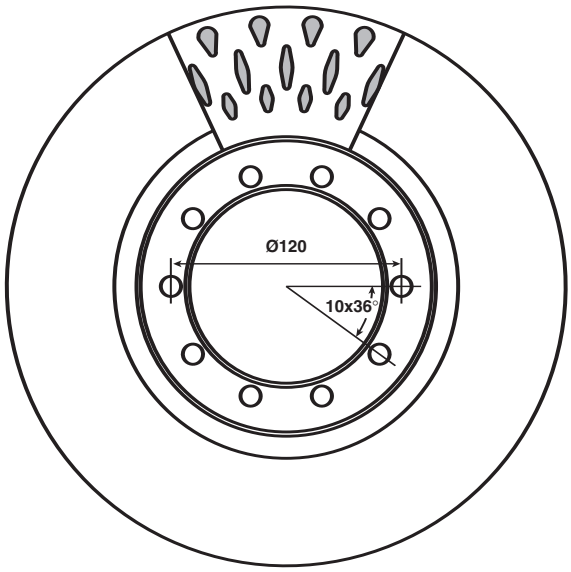

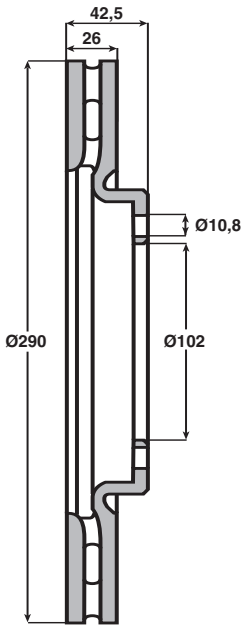

Renault Trucks (Renault VI) Mascott p 338

	A	B	B min	H	C	D	E1	E2	E3
569103J	290	22	19	78	115	132	8x10.8		

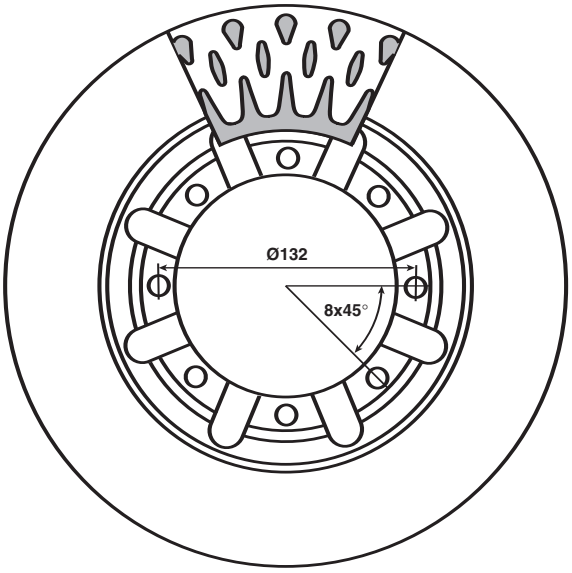

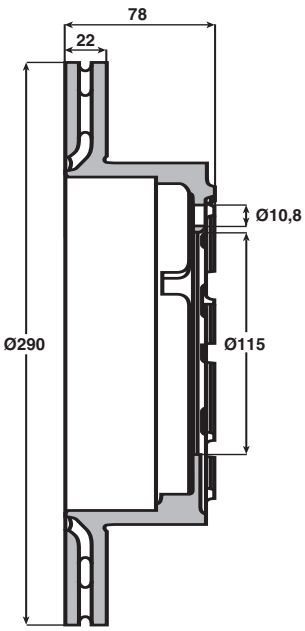

Renault Trucks (Renault VI) Mascott p 340

JURID by Honeywell

© JURID / All rights reserved 2005



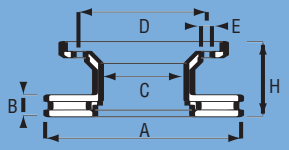

		A	B	B min	H	C	D	E1	E2	E3
569104J		276	22	19	72,5	73	118	5x15.5	2x8.7	

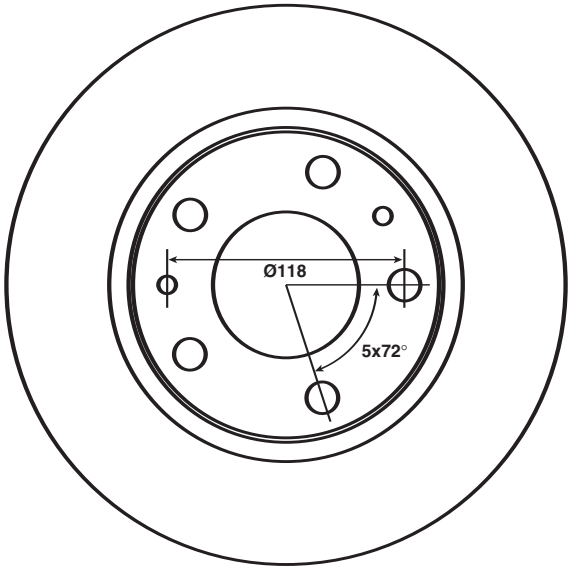

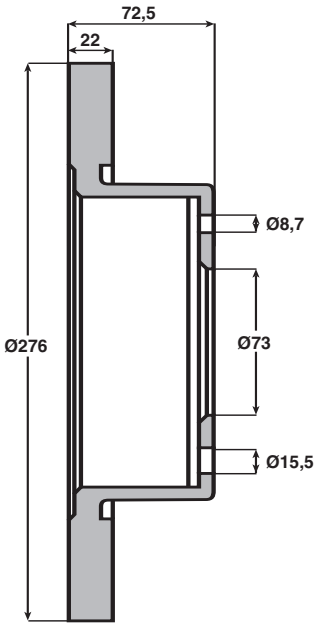

Iveco  Daily II p 88

569105J

		A	B	B min	H	C	D	E1	E2	E3
		276	16	13	69,5	73	118	5x15.5	2x8.7	

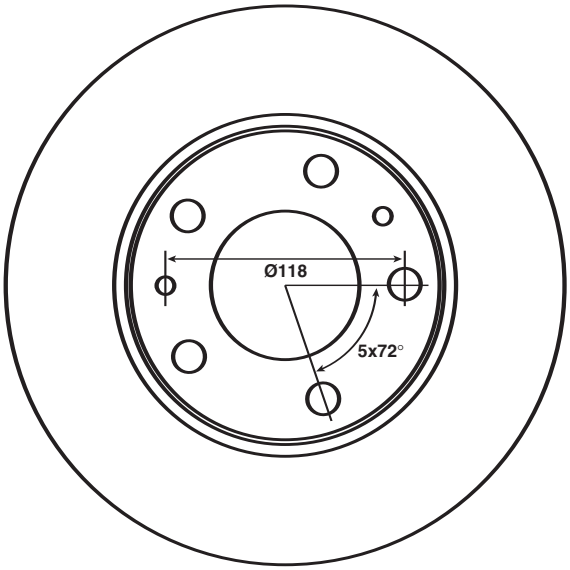

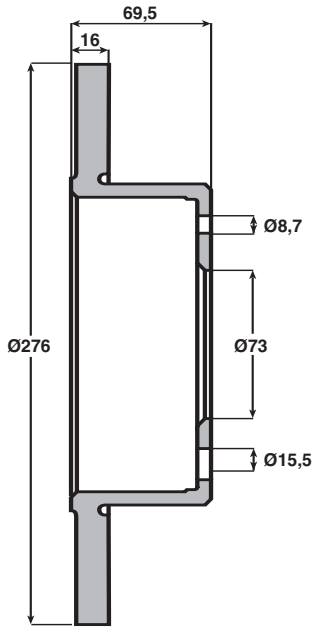

Iveco  Daily II p 88

JURID / All rights reserved 2005





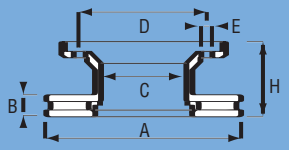

		A	B	B min	H	C	D	E1	E2	E3
569106J		276	16	13	69,5	73	118	5x15.5	2x8.7	

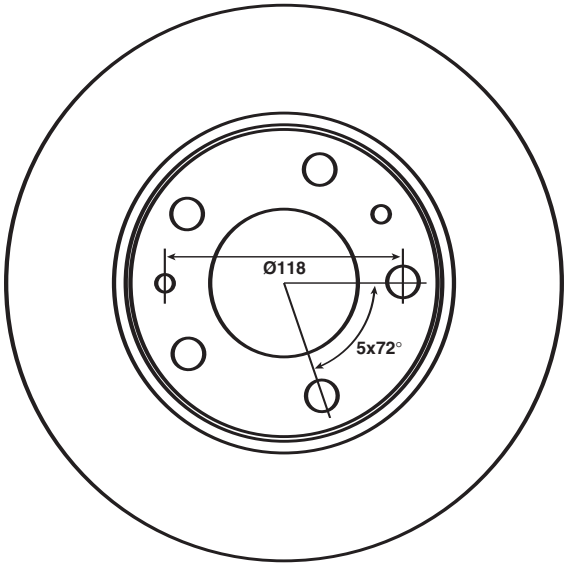

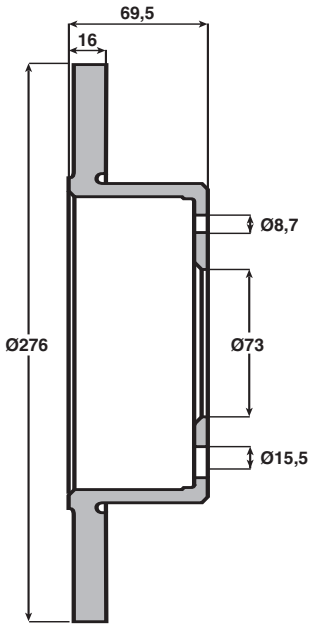

Iveco  Daily II p 88

		A	B	B min	H	C	D	E1	E2	E3
569108J		330	34	36	129,5	118	177	8xM12x1.5		

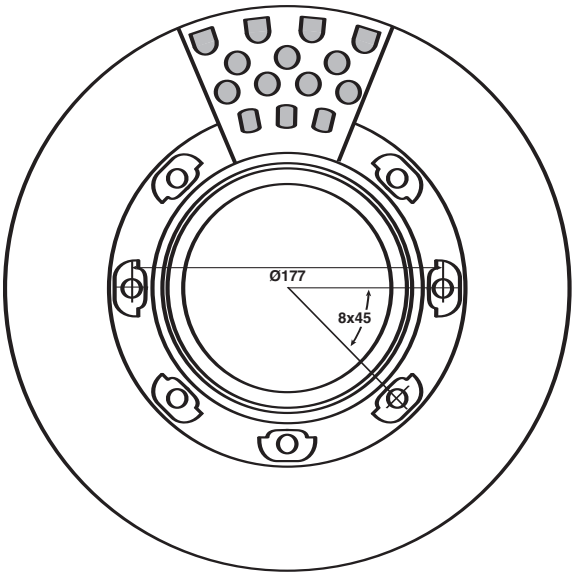

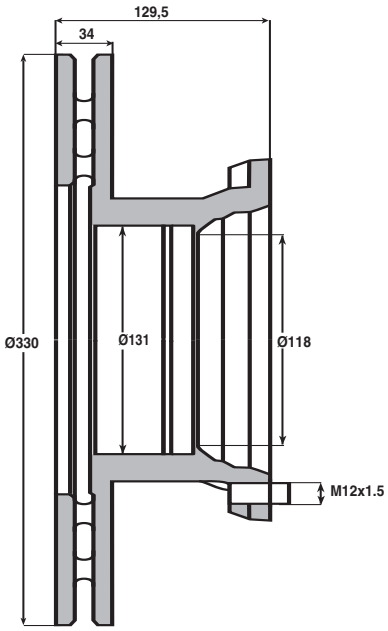

Mercedes Benz  Atego p 206

JURID by Honeywell

JURID / All rights reserved 2005





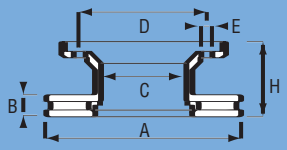

		A	B	B min	H	C	D	E1	E2	E3
569109J		375	45	37	139,5	131	168	12x19	3xM12x1.5	

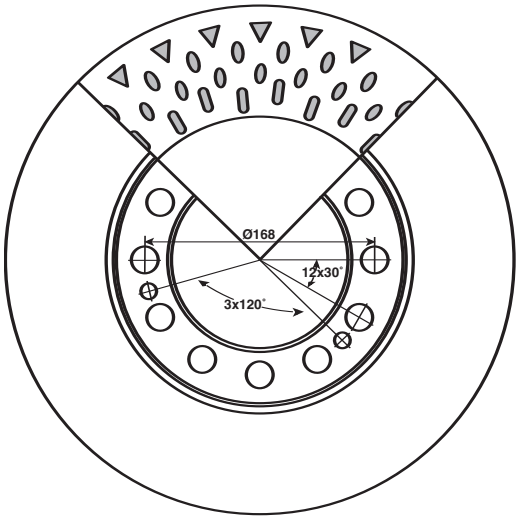

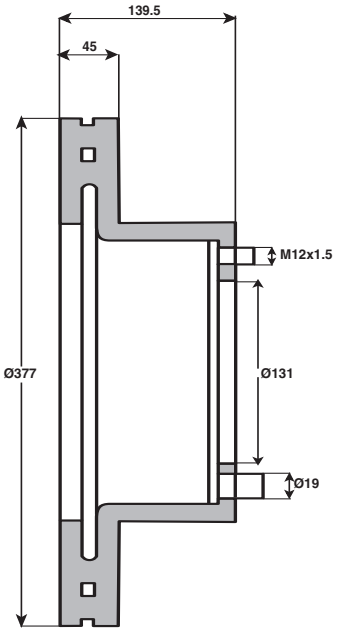

SAF Sauer p 376

		A	B	B min	H	C	D	E1	E2	E3
569110J		377	45	37	138,5	169	196	8xM14x1.5		

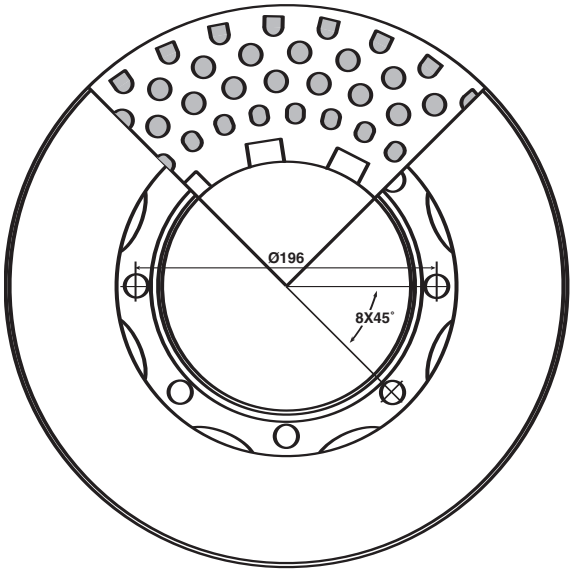

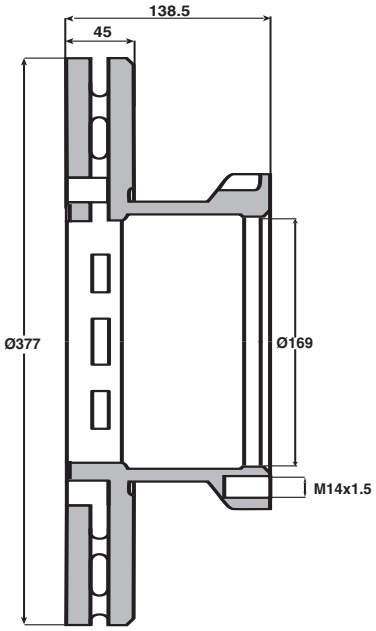

SMB p 396

JURID / All rights reserved 2005

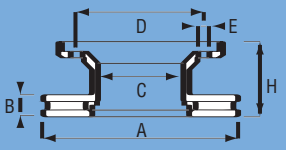

		A	B	B min	H	C	D	E1	E2	E3
569112J		324	30	26	120,5	157	192	6xM12x1.5		

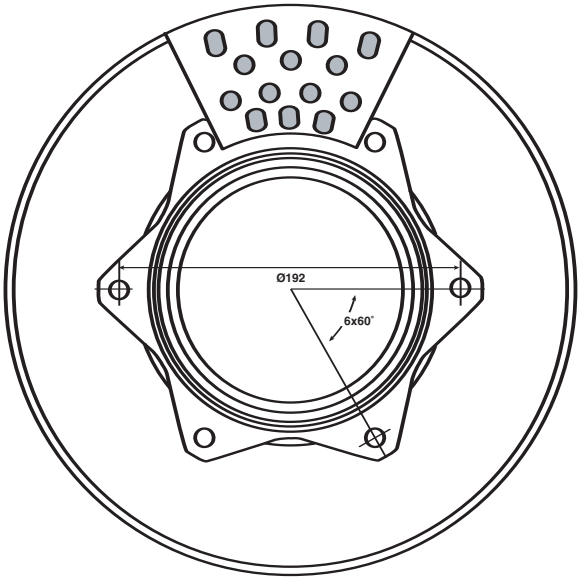

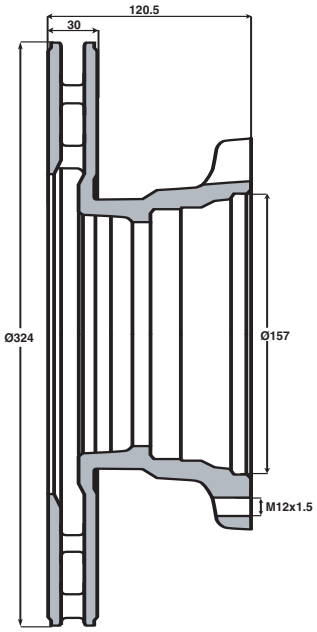

Mercedes Benz Vario Plus p 200

		A	B	B min	H	C	D	E1	E2	E3
569113J		434	45	41	96,7	131	165	10x17	2xM14x2	

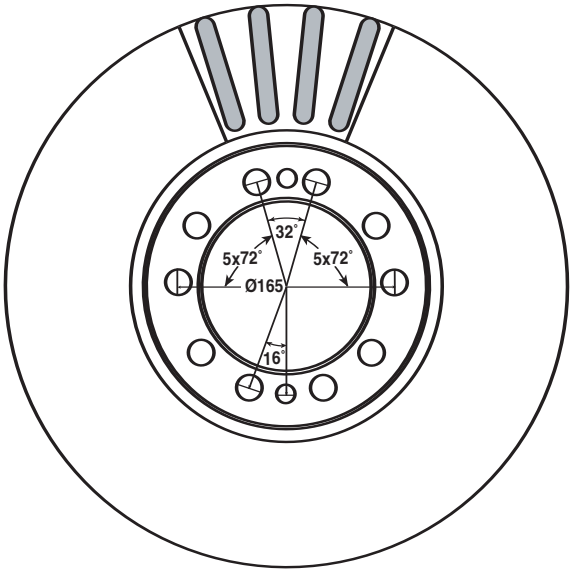

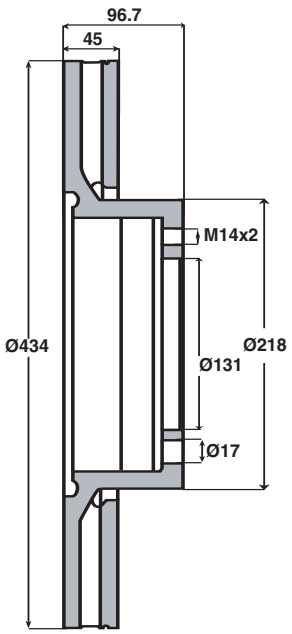

Renault Trucks (Renault VI) Magnum E. Tech p 346

JURID by Honeywell

© JURID / All rights reserved 2005



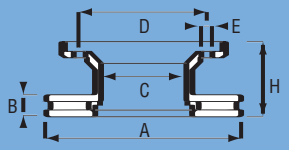

	A	B	B min	H	C	D	E1	E2	E3
569114J	434	45	40	160	224	256	12xM14x1.5		

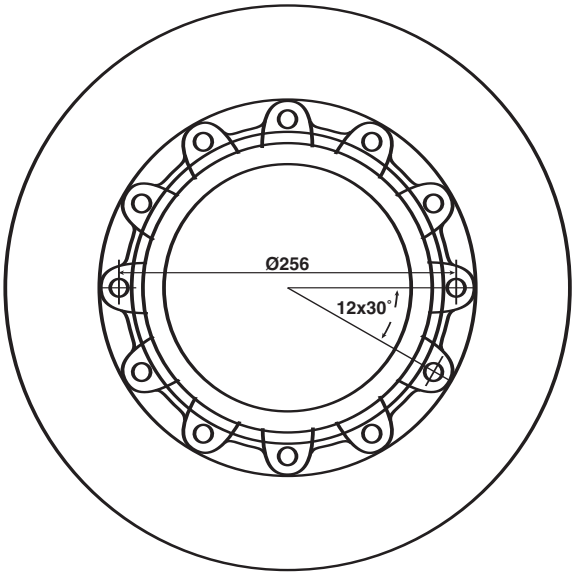

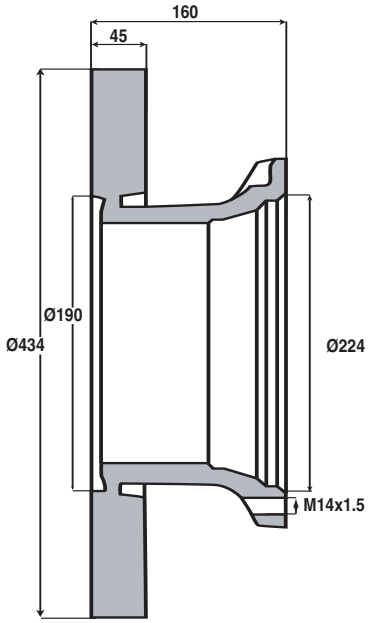

Renault Trucks (Renault VI)  Magnum E. Tech p 346

	A	B	B min	H	C	D	E1	E2	E3
569115J	330	34	28	80	95	118	10x15	2xM12	

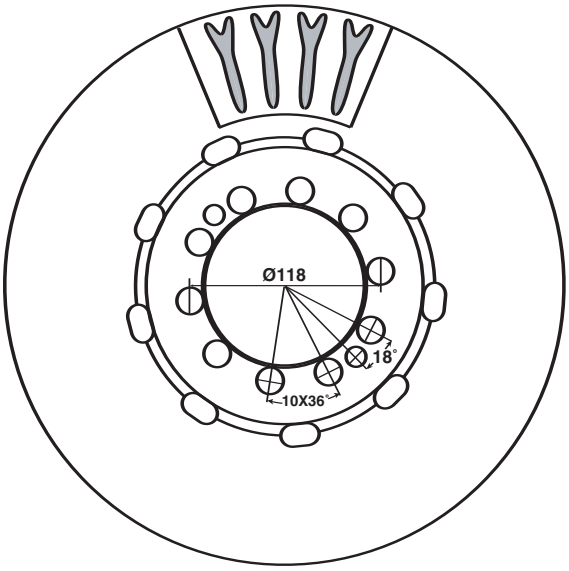

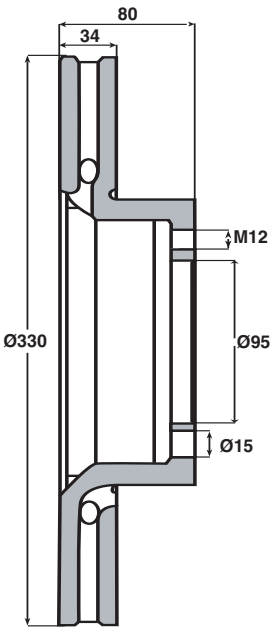

Renault Trucks (Renault VI)  Midlum p 358

JURID / All rights reserved 2005

JURID by Honeywell



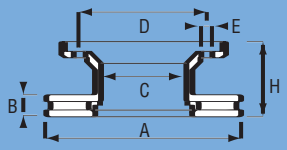

	A	B	B min	H	C	D	E1	E2	E3
569116J	330	34	28	137	194	245	6x21		

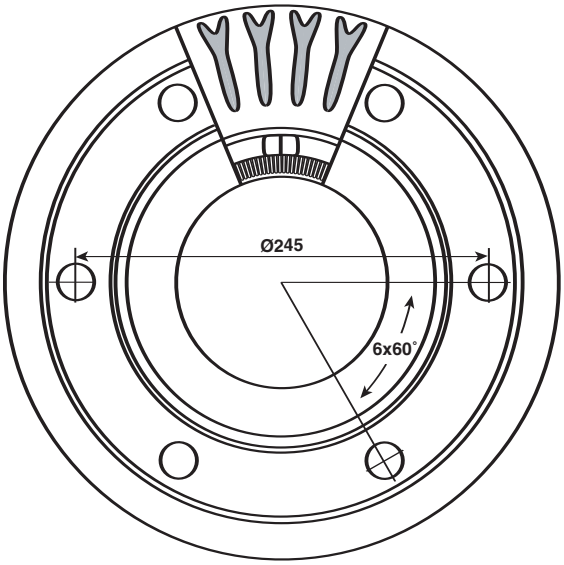

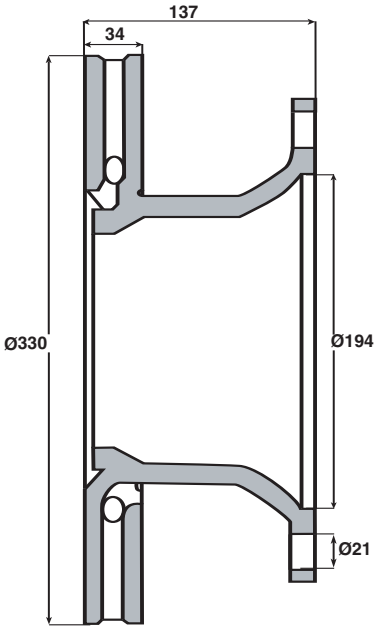

Renault Trucks (Renault VI)  Midlum p 358

569117J	375	45	38	166,5	222	275	8x22.5		

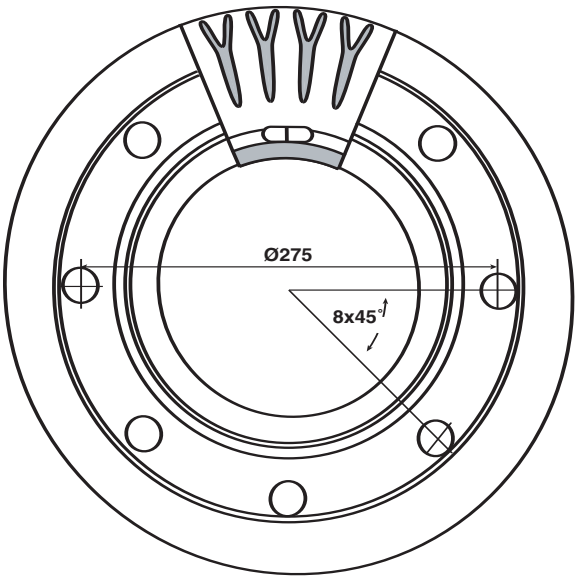

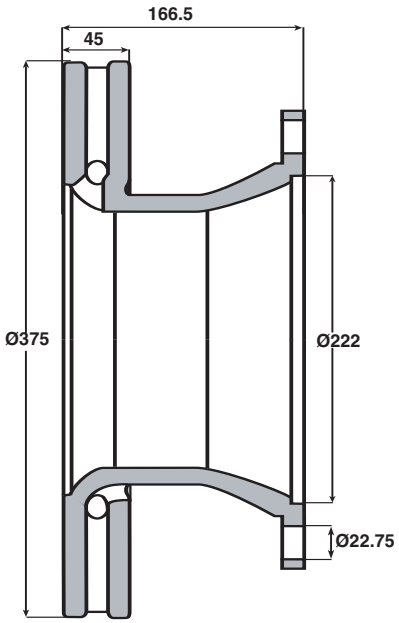

Renault Trucks (Renault VI)  Midlum p 360

JURID by Honeywell

© JURID / All rights reserved 2005





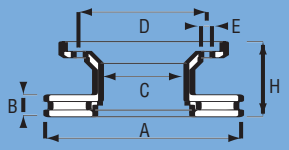

	A	B	B min	H	C	D	E1	E2	E3
569118J	375	45	38	166,5	262	335	10x22.5		

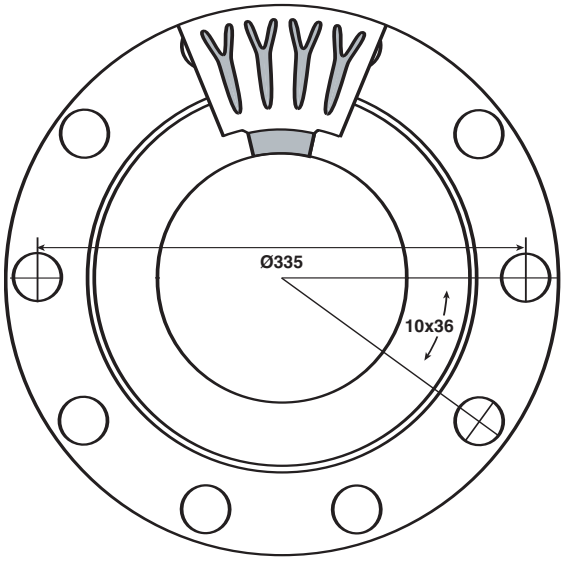

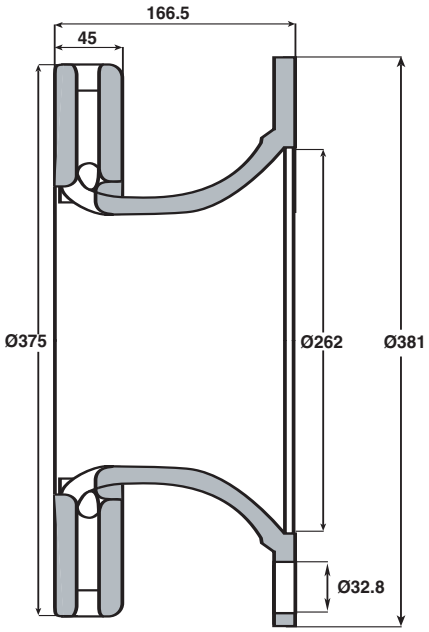

Renault Trucks (Renault VI)  Midlum p 360

569119J	375	45	38	99	117	144	10x15	2xM14	

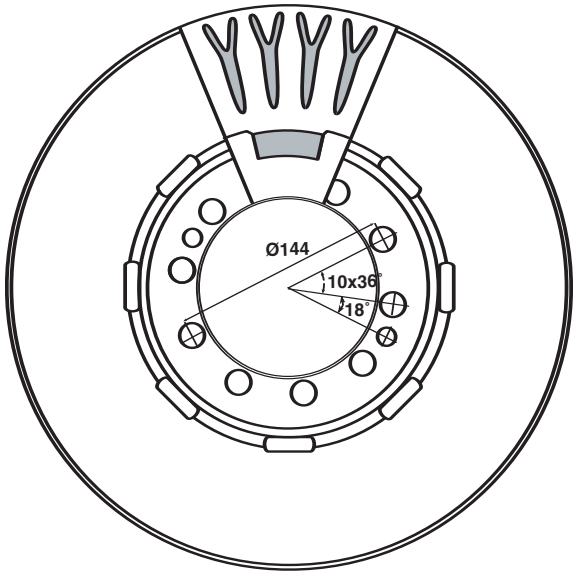

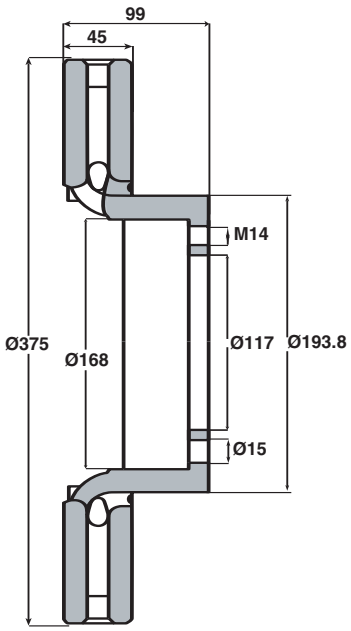

Renault Trucks (Renault VI)  Midlum p 360

JURID / All rights reserved 2005

JURID by Honeywell

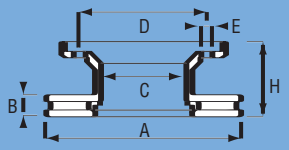

	A	B	B min	H	C	D	E1	E2	E3
569120J	258	12	10	96	85	130	5x15	1x16/23	

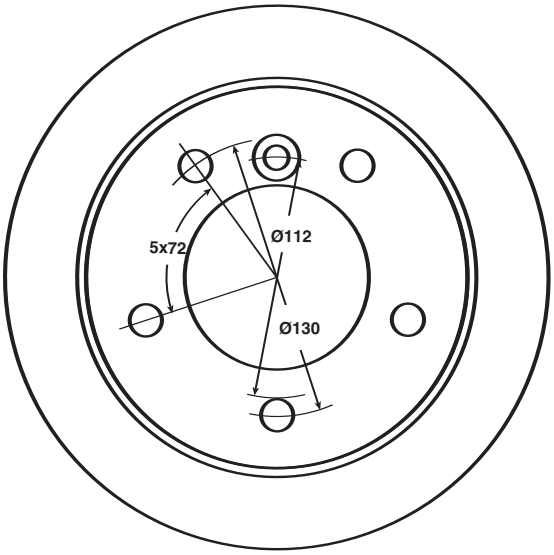

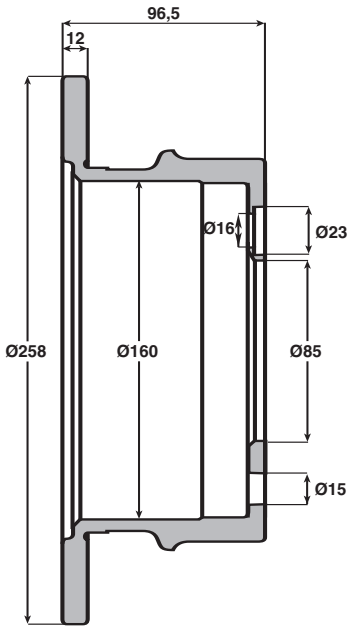

Mercedes Benz		Sprinter	p 198
Volkswagen		LT	p 414

	A	B	B min	H	C	D	E1	E2	E3
569121J	272	16	14	96	85	130	5x15	1x16/23	

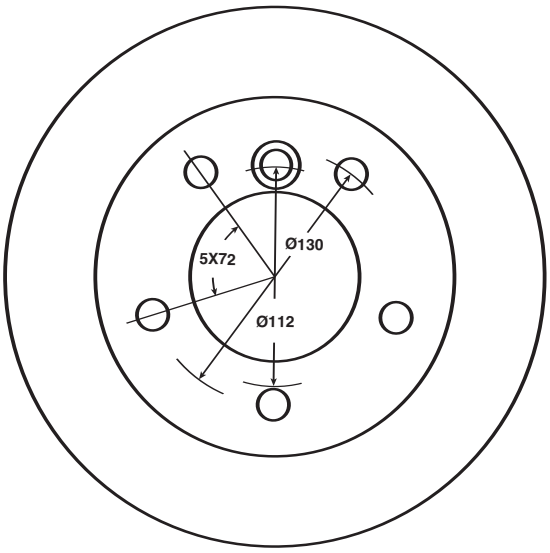

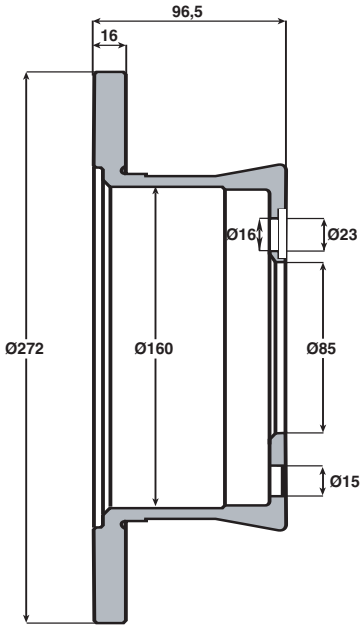

Mercedes Benz		Sprinter	p 198
Volkswagen		LT	p 414

JURID by Honeywell

© JURID / All rights reserved 2005



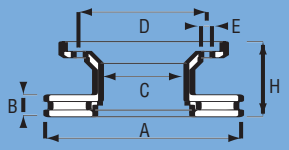

	A	B	B min	H	C	D	E1	E2	E3
569122J	276	22	19	77	85	130	5x15	1x16/23	

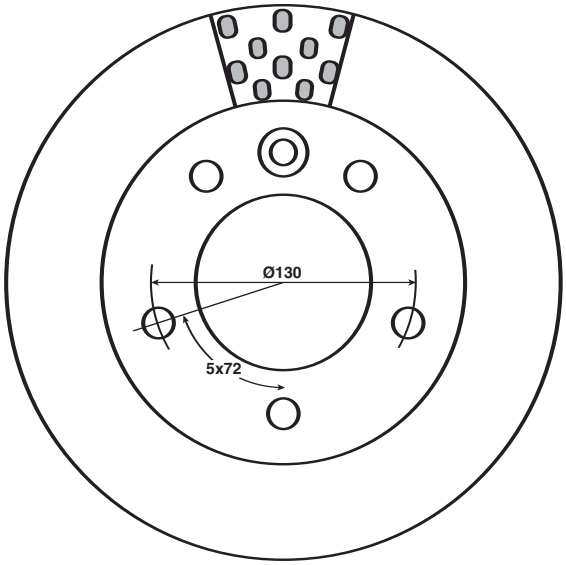

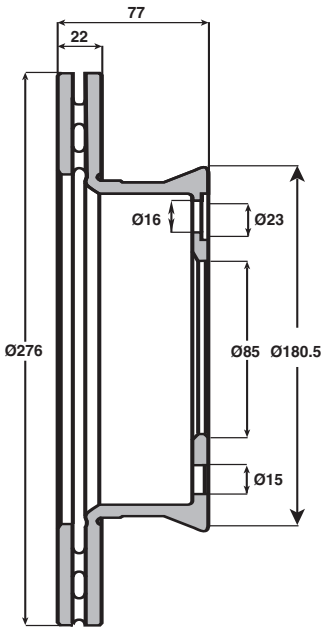

Mercedes Benz		Sprinter	p 198
Volkswagen		LT	p 414

	A	B	B min	H	C	D	E1	E2	E3
569123J	377	45	37	159,5	230	275	8x23	2x10.2	5xM6

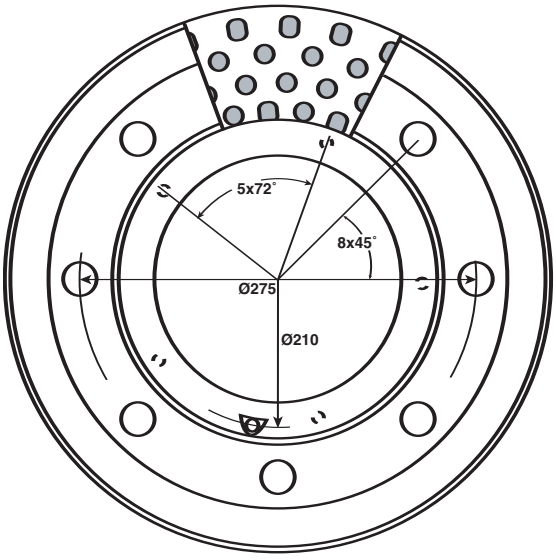

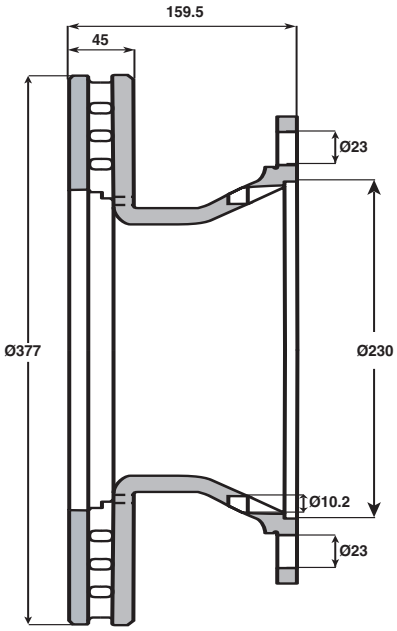

BPW			p 20

JURID / All rights reserved 2005

JURID by Honeywell





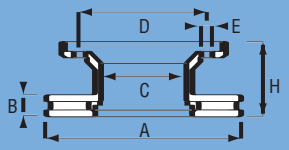

		A	B	B min	H	C	D	E1	E2	E3
569124J		315	26	23	118,5	160	205	6xM18x1.5	2xM10	

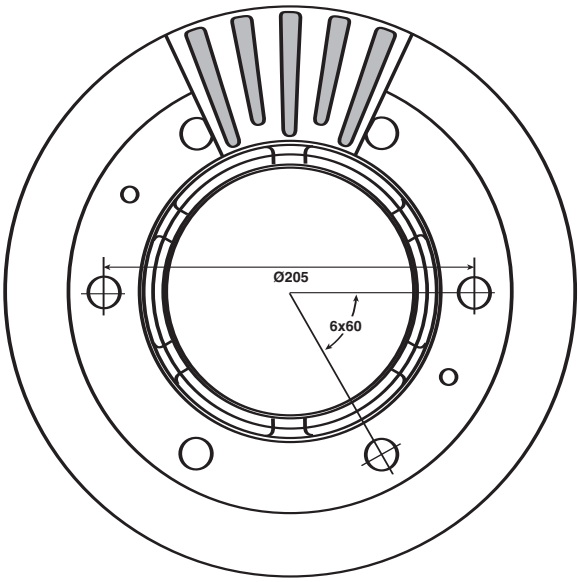

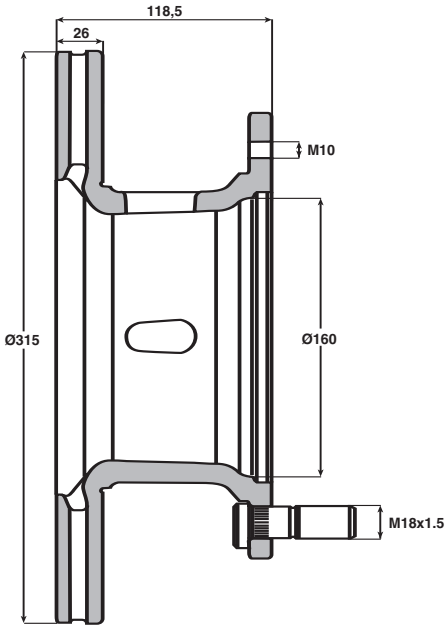

Iveco  Z p 106, 108

JURID by Honeywell

JURID / All rights reserved 2005



JURID / All rights reserved 2005



JURID
by Honeywell

JURID / All rights reserved 2005

		OE	WVA
581306J			
	**Mercedes Benz** T 1 **Mercedes Benz / Evobus** Buses **Perrot**	123 540 017 / 00 540 0217	20784
90 mm x4			
587000J			
	**Iveco (Fiat/Magirus/OM/Unic)** Buses, Eurocargo, Eurostar, Eurotech	190 79 56	29011, 29032
300 mm x2			
587001J			
	**Iveco (Fiat/Magirus/OM/Unic)** Buses, Eurocargo, Eurostar, Eurotech	190 82 31	29011, 29032
150 mm x2			
587002J			
	**Iveco (Fiat/Magirus/OM/Unic)** Eurocargo	190 79 42	29065, 29067
495 mm x2			
587003J			
	**Dennis** Buses **Karosa** **Kässbohrer / Setra** Buses **MAN** Buses, F 2000, F 90, M 2000, TG-A	81 508 110 004 / 82 823 884 510	29030, 29053
335 mm x2			
587004J			
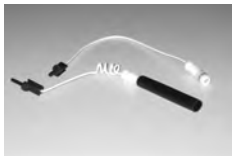	**Mercedes Benz** T 2, Vario Plus **Mercedes Benz / Evobus** Buses	669 540 06 17	29835
238 mm x4			
587005J			
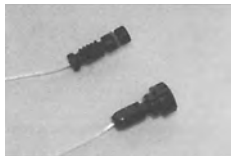	**Mercedes Benz** LN 2 / Cityliner, T 2 **Mercedes Benz / Evobus** Buses **Optare**		15869, 17973, 17975
267 mm x4			

JURID / All rights reserved 2005

		OE	WVA

587006J

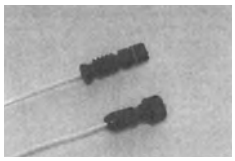

198 mm x4

Hanomag / Henschel	
Iveco (Fiat/Magirus/OM/Unic)	Daily
Mercedes Benz	T 1, T 2
Mercedes Benz / Evobus	Buses
Perrot	
Steyr-Daimler-Puch	

11582, 13532, 15742

587007J



155 mm x2

Mercedes Benz / Evobus Buses

356 540 0017

29030, 29053

587008J



195 mm x4

Mercedes Benz	Actros, Atego, LK, LN 2 / Cityliner, MK / SK, Powerliner, TP Liner
Mercedes Benz / Evobus	Buses
Metro Cammel Weymann	

A6775400817

15162, 17238, 17278, 17280, 17287, 17290, 1907820, 19494, 19495, 19496, 19506, 1950616

587009J



193 mm x4

Mercedes Benz	Actros, Atego, LK, LN 2 / Cityliner, MK / SK, Powerliner, TP Liner
Mercedes Benz / Evobus	Buses
Metro Cammel Weymann	

A6775700717

17238, 17278, 17280, 17287, 17290, 19494, 19495, 19496

587010J



210 mm x2

Mercedes Benz	Sprinter, Vito
Perrot	
Volkswagen	LT

901 540 0017 / 901 540 0117 / 2D0 919 351

21576, 21592, 21621, 29076

587011J



300 mm x4

Mercedes Benz MB Trac, Unimog

435 542 0017

20392, 29554

587012J



580 mm x2

Renault VI Magnum / AE, Major / R

68320654

29043

JURID by Honeywell

© JURID / All rights reserved 2005

		OE	WVA
587013J			
	**Renault VI**	Magnum / AE, Major / R	5001822987 / 68310622 / 68320902	29030
370 mm x2				
587014J			
	**Renault VI**	Maxter / G, Midliner / M, Midliner / S	1235400017/005400217	29013
260 mm x2				
587015J			
	**Renault VI**	Midliner	5001829545	29065, 29067
980 mm x2				
587016J			
	**Renault VI**	Midliner / S	68310622 / 68320874 / 68320909	29065, 29067
880 mm x2				
587017J			
	**MAN**	Buses, F & H, F 2000, F 90, M, M 2000, M 90, TG-A, U 90 (Unterflur)	81259370026 / 81259376011	17238, 19494, 19495, 19496
	Renault VI	Saviem		
175 mm x2				
587018J			
	**MAN**	Buses, F & H, F 2000, F 90, M, M 2000, M 90, TG-A, U 90 (Unterflur)	81259370022 / 81259376012	17238, 19494, 19495, 19496
	Renault VI	Saviem		
176 mm x2				
587019J			
	**MAN**		68323004 / 812508226011 / 81508226016	29030
350 mm x2				

JURID / All rights reserved 2005

		OE	WVA
587020J			
	**MAN**	M 2000	29093
380 mm x2			
587021J			
	**MAN**	68323117 / 81508226012	29030, 29053
377 mm x2			
587022J			
	**MAN**	Buses, L 2000, M 2000	33 48 00 87 / 81508226014	29088, 29091
278 mm x2			
587023J			
	**MAN**	Buses, F 2000, F 90, M 2000, TG-A	68 323 118 / 81508226013	29030, 29053
257 mm x2			
587024J			
	**Iveco (Fiat/Magirus/OM/Unic)**	Daily	190 84 07	29121, 29357
300 mm x2			
587025J			
	**Iveco (Fiat/Magirus/OM/Unic)**	Eurocargo	190 88 25	29122, 29374
475 mm x2			
587026J			
	**Heuliez**		
	Renault VI	Buses, Magnum / AE, Manager / G, Premium	5001834075	29030, 29090
	Volvo	Buses	
350 mm x2			

JURID by Honeywell

© JURID / All rights reserved 2005

587027J



250 mm x2

		OE	WVA
Heuliez			
Renault VI	Premium	5001831161	29090

587028J



292 mm x2

		OE	WVA
Iveco	Eurotech	190 36 51	29108

587029J



205 mm x2

		OE	WVA
Foden	Fleetmaster, Haulmaster		
Fruehauf			
Heuliez			
Iveco (Fiat/Magirus/OM/Unic)	Buses, Eurocargo, Eurotech, M, Magirus, Magirus Buses, OM, T, Turbostar/Turbotech		19384
Mack			
Meritor / ROR			
Seddon-Atkinson	Buses		
Telma Soma Rockwell			
Van Hool			
Volvo	Buses, F 6, FL 6		

587030J



131 mm x2

		OE	WVA
Iveco (Fiat/Magirus/OM/Unic)	Eurostar, Eurotech, Eurotrakker		19091, 19262, 19263
Perrot			

587031J



131 mm x2

		OE	WVA
ERF	E		
Iveco (Fiat/Magirus/OM/Unic)	Eurostar, Eurotech, Eurotrakker		19553, 19555, 19556
Meritor / ROR			

587032J

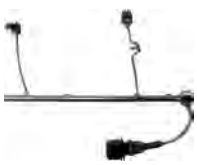

277/342 mm x2

		OE	WVA
RVI	Premiumı		29131

JURID / All rights reserved 2005

		OE	WVA
587033J			
	**RVI**	Midlum 7,5 - 12 T	29088
190/248 mm x2			
587034J			
	**RVI**	Midlum 12 - 16 T	29100
310/399 mm x2			
587035J			
	**BPW**	19,5»	29093
294 mm x2			
587036J			
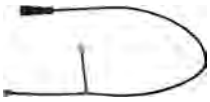	**BPW**	22,5»	29108
	SMB	22,5»	
682 mm x2			
587037J			
	**SAF/SAUER**	19,5»	29126
	SMB	19,5»	
705 mm x2			

JURID / All rights reserved 2005



JURID / All rights reserved 2005

JURID by Honeywell

© JURID / All rights reserved 2005

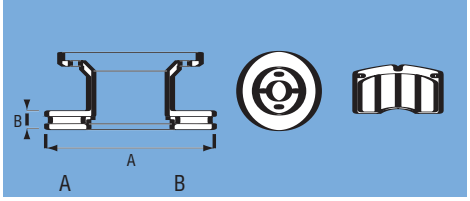

A	B		
238,5	16	561577J	573108
238,5	16	561577J	571521J
252	24	561171J	571246J
252	24	561171J	571306J
252	24	561171J	571368J
252	20	561222	572360
252	20	561222	572361
254	14,3	561378J	571336J
254	24,5	561624J	571745J
256	13	561159J	571304J
256	16	561321J	571304J
256	16	561321J	571325J
256	16	561321J	571393J
257	20	562033J	571843J
258	16	561437J	571380J
258	15	561493J	571380J
258	12	567771J	2907604530
258	12	567771J	2907609560
258	12	567771J	571846J
258	12	567771J	571910J
258	12	567771J	571950J
258	12	569120J	2907604530
258	12	569120J	2907609560
258	12	569120J	571846J
258	12	569120J	571910J
258	12	569120J	571950J
260	16	561609J	571460J
263	24	561708	2343005390
263	24	561708B	2998404612
263	24	561998B	2910009560
263	24	561998B	2998404612
263	24	567145J	2998404611
263	24	567145J	571368J
263	24	567145J	571521J
267	14,2	561127J	571250J
267	14,2	561127J	571325J
267	14,2	561127J	571379J
267	14,2	561127J	571442J
267	14,2	561127J	571446J
267	14,2	561127J	571447J
267	14,2	561612B	571422J
267	14,2	561612J	571379J
267	14,2	561612J	571416J
270	14,3	561121J	571233J
270	14,3	561121J	571250J
270	14,3	561121J	571379J
270	14,3	561121J	571822J
270	24	561282J	571379J
270	24,5	561625J	571745J
270	24,5	561625J	571746J
272	16	567761J	2907604530
272	16	567761J	2907609560
272	16	567761J	571846J
272	16	567761J	571910J
272	16	567761J	571950J
272	16	569121J	2907604530
272	16	569121J	2907609560
272	16	569121J	571846J
272	16	569121J	571910J

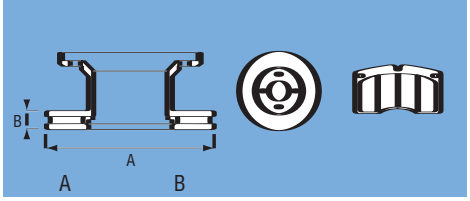

A	B		
272	16	569121J	571950J
275	24	561504B	571822J
276	14,4	561350B	571233J
276	14,4	561350B	571250J
276	22	562054J	571844J
276	22	562054J	571946J
276	22	567760J	2907604530
276	22	567760J	2907609560
276	22	567760J	571844J
276	24	567948J	571368J
276	24	567954J	2998404611
276	24	567954J	571368J
276	22	569104J	2912114530
276	16	569105J	2912104531
276	16	569105J	2935709560
276	16	569106J	2912104531
276	16	569106J	2935709560
276	22	569122J	2907604530
276	22	569122J	2907609560
276	22	569122J	571844J
277	24	562141	
278	13	561252J	571236J
278	24	561254J	571321J
278	24	561254J	571932J
280	14	561099J	571217J
280	14	561099J	571340J
280	16	561135J	571272J
280	16	561360J	571419J
280	16	561360J	571446J
280	24	561610J	571458J
280	22	561854J	571272J
280	24	561984J	573060
280	24	561984J	571839J
280	18	561992J	571839J
280	10	562065J	571845J
280	10	562065J	571947J
280	24	562080	571458J
280	24	562080	571934J
280	12	562081J	
280	24	562105	573107
280	24	562105	571932J
280	12	562211	573059
280	16	562215	
281	20	561308J	571255J
282	18	561857J	571847J
282	18	562079	571458J
282	18	562079	571934J
285	22	567810J	2907604530
285	22	567810J	2907609560
285	22	567810J	2983505440
285	22	567810J	2983509560
289	22	567128J	2912104531
289	22	567128J	2935709560
290	16	561339J	571325J
290	16	561339J	571393J
290	22	567118J	2912104531
290	22	567118J	2935709560
290	25	567124J	2900109561
290	25	567124J	2912104531

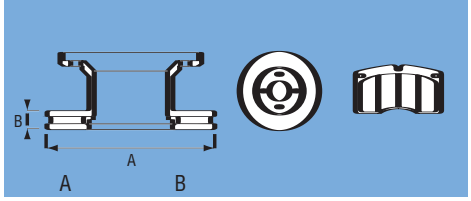

A	B		
290	25	567124J	2935709560
290	22	569101J	2912104530
290	26	569102J	2916009560
290	22	569103J	2912104530
294	26	562140	573015
294	26	562140	573110
300	24	561969J	573061
300	24	561969J	571840J
300	26	562198	
304	30	561639J	2983505440
304	30	561639J	2983509560
304	30	567127J	2906509560
304	30	567127J	2937409560
304	30	567769J	2983505440
304	30	567769J	2983509560
304	30	567770J	2983505440
304	30	567770J	2983509560
304	30	567955J	2906503341
304	30	567955J	2906509560
304	30	567955J	2906703341
304	30	567955J	2906709560
305	12	562164	573055
305	28	562190	
312	30	567123J	2901709560
312	30	567123J	2902409561
315	35	567109J	2968805440
315	35	567109J	2978205440
315	35	567119J	2968805440
315	35	567119J	2978205440
315	26	567122J	2901709560
315	26	567122J	2902409561
315	35	567803J	2968805440
315	35	567803J	2978205440
315	26	569124J	2901709560
315	26	569124J	2902409561
322	30	561919J	2906703342
322	30	561919J	2906709560
322	30	561920J	2906703342
322	30	561920J	2906709560
322	30	567114J	2906703342
322	30	567114J	2906709560
322	30	567116J	2906709560
322	30	567121J	2930209560
322	30	567150J	2906703342
322	30	567150J	2906709560
322	30	567151J	2906703342
322	30	567151J	2906709560
322	30	567560J	2930209560
322	30	567956J	2906503341
322	30	567956J	2906509560
322	30	567956J	2906703341
322	30	567956J	2906709560
324	30	561754J	2983505440
324	30	561754J	2983509560
324	30	567762J	2983505440
324	30	567762J	2983509560
324	30	567763J	2983505440
324	30	567763J	2983509560
324	30	567776J	2983505440

Ø mm

JURID / All rights reserved 2005

JURID by Honeywell

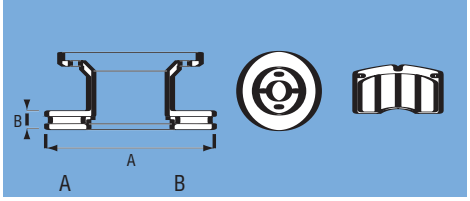

A	B		
324	30	567776J	2983509560
324	30	569112J	2983505440
324	30	569112J	2983509560
325	30	567401J	2905503010
325	30	567401J	2905509560
325	30	567401J	2905603010
330	34	567402J	2908809560
330	34	567402J	2909103010
330	34	567405J	2908809560
330	34	567405J	2909103010
330	34	569108J	
330	34	569115J	2908809560
330	34	569116J	2908809560
335	34	567764J	2911509100
335	34	567767J	2911509100
335	34	567768J	2911509100
350	30	567950J	2907203341
350	30	567950J	2907209561
354	30	567949J	2901303371
354	30	567949J	2901303372
354	30	567949J	2901309561
354	30	567949J	2906503341
354	30	567949J	2906509560
354	30	567949J	2906703341
354	30	567949J	2906709560
370	45	567125J	2903204240
370	45	567125J	2903209560
370	45	567126J	2903204240
370	45	567126J	2903209560
374	22	567141J	2955405880
374	22	567142J	2955415880
374	22	567805J	
375	44	567812J	2907705390
375	44	567812J	2907709561
375	45	569109J	2912605399
375	45	569109J	2915905399
375	45	569117J	2914209569
375	45	569118J	2914209569
375	45	569119J	2914209569
377	45	567403J	2909305390
377	45	567765J	2909305390
377	45	567766J	2909305390
377	45	569002J	2912605399
377	45	569002J	2915905399
377	45	569022J	2909305390
377	45	569110J	
377	45	569123J	2909305390
378	45	567575J	
378	45	567957J	2912409560
380	30	567140J	
380	30	567806J	
380	44	567958J	2910009560
386	25	567143J	2955415880
392	48	567111J	2900805440
392	48	567111J	2901505440
392	48	567111J	2958205440
392	48	567111J	2958209560
396	48	567112J	2949805440
396	48	567112J	2949809560

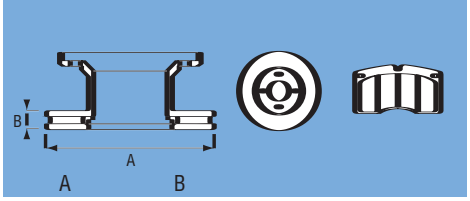

A	B		
396	48	567112J	2958205440
396	48	567112J	2958209560
400	42	567951J	2904403331
400	42	567951J	2904409561
406	48	567113J	2974705440
406	48	567113J	2974709560
406	48	567113J	2996905440
410	48	567802J	2974705440
410	48	567802J	2974709560
410	48	567802J	2996905440
417	30	567120J	2907503341
417	30	567120J	2907509561
417	28	567134J	2907503341
417	28	567134J	2907509561
421	22	567144J	2955415880
425	45	567130J	2901605441
425	45	567130J	2901609561
425	45	567131J	2901605440
430	45	567108J	2949805440
430	45	567108J	2949809560
430	45	567108J	2958205440
430	45	567108J	2958209560
430	50	567117J	2901104240
430	50	567117J	2901109560
430	50	567117J	2910815390
430	45	567500J	2910815390
430	45	567751J	2910815390
430	45	567800J	2910815390
430	45	567801J	2910815390
430	45	569000J	2912009560
430	45	569000J	2914305390
430	45	569001J	2912009560
430	45	569001J	2914305390
430	45	569020J	2910815390
430	45	569021J	2910815390
430	45	569100J	2910815390
432	45	567110J	2903005390
432	45	567110J	2903009560
432	45	567110J	2905305390
432	45	567406J	2903004230
432	45	567406J	2903009560
432	45	567406J	2905304230
432	45	567407J	2903004230
432	45	567407J	2903009560
432	45	567407J	2905304230
432	45	567408J	2903004230
432	45	567408J	2903009560
432	45	567408J	2905304230
432	45	567408J	2910815390
432	45	567410J	2910815390
434	45	569113J	2913109560
434	45	569114J	2913109560
436	45	567135J	2910815390
438	45	567152J	2909005391
438	45	567152J	2909009560
438	45	567400J	2903004230
438	45	567400J	2903009560
438	45	567400J	2905304230
438	45	567400J	2974705440

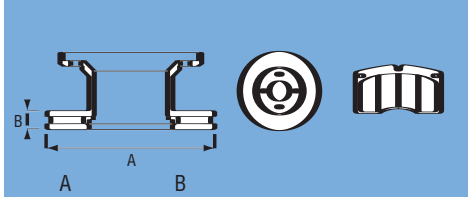

A	B		
438	45	567400J	2974709560
438	45	567555J	2903005390
438	45	567555J	2903009560
438	45	567555J	2905305390
438	45	567953J	2903005391
438	45	567953J	2903005392
438	45	567953J	2903009560
438	45	567953J	2909005390
438	45	567953J	2909005391
438	45	567953J	2909005392
438	45	567953J	2909009560
438	45	567953J	2913109560
440	45	567952J	2904303381
440	45	567952J	2904303382
440	45	567952J	2904309560
460	48	567115J	2974705440
460	48	567115J	2974709560
460	48	567115J	2996905440

Ø mm

JURID by Honeywell

© JURID / All rights reserved 2005

OE/JURID

JURID / All rights reserved 2005

JURID by Honeywell

© JURID / All rights reserved 2005



OE	JURID	
0004210710	**2909305390**	Mercedes
0024200820	**2903005390**	Setra
0024204920	**2910815390**	MB
0024204920-10	**2910815390**	MB
0024205520	**2903005390**	Mercedes
0024207820	**2909305390**	Mercedes
0024207920	**2909305390**	Mercedes
0034201720	**2907604530**	Mercedes
0034202020	**2910815390**	MB
0034202220	**2910815390**	MB
0034202220-10	**2910815390**	MB
0034206620	**2911509100**	Mercedes
0034207320	**2911509100**	Mercedes
0345-065	**1949515050**	FAUN
0683274	**1901005700**	DAF
0683278	**1906305700**	DAF
0980106440	**29171**	BPW
0980106450	**29167**	BPW
0980106950	**29171**	BPW
0980106960	**29167**	BPW
10568483	**2996905440**	Van Hool
1057001000		SAF / Sauer
1057001010		SAF / Sauer
1057001020		SAF / Sauer
1057001200	**1903204040**	SAF / Sauer
1057001210	**1903214040**	SAF / Sauer
1057001220	**1903224040**	SAF / Sauer
1057001300	**1909404040**	SAF / Sauer
1057001310	**1909414040**	SAF / Sauer
1057001320	**1909424040**	SAF / Sauer
1057002200	**1575114040**	SAF / Sauer
1057002210	**1575124040**	SAF / Sauer
1057002220	**157513**	SAF / Sauer
1057002400	**1951504040**	SAF / Sauer
1057002410	**1951524040**	SAF / Sauer
1057002420	**1951524040**	SAF / Sauer
1057002500	**1951504040**	SAF / Sauer
1057002510	**1951514040**	SAF / Sauer
1057002520	**1951514040**	SAF / Sauer
1057003300	**1951704040**	SAF / Sauer
1057003310	**1951714040**	SAF / Sauer
1057003320	**195172**	SAF / Sauer
1057003400	**1951704040**	SAF / Sauer
1057003410	**1951714040**	SAF / Sauer
1057003420	**195172**	SAF / Sauer
1057004300	**1989204040**	SAF / Sauer
1057004310	**1989224040**	SAF / Sauer
1057004320	**1989224040**	SAF / Sauer
1057004400	**2903005390**	SAF / Sauer
1057004410	**1989204040**	SAF / Sauer
1057004420	**1989214040**	SAF / Sauer
1057004800	**1991203290**	SAF / Sauer
1057004810	**1991213290**	SAF / Sauer
1057004820	**199122**	SAF / Sauer
1057004900	**1991203290**	SAF / Sauer
1057004910	**1991213290**	SAF / Sauer
1057004920	**199122**	SAF / Sauer
1057005400	**190890**	SAF / Sauer
1057005500	**190880**	SAF / Sauer
1057005800		SAF / Sauer
1057005810		SAF / Sauer
1057005820		SAF / Sauer
1057006000	**1928304040**	SAF / Sauer
1057006010	**1928314040**	SAF / Sauer
1057006020	**192832**	SAF / Sauer
1057006100		SAF / Sauer
1057006110		SAF / Sauer



OE	JURID	
1057006120		SAF / Sauer
1057006200	**194180**	SAF / Sauer
1057006210	**194181**	SAF / Sauer
1057006220	**194182**	SAF / Sauer
1057006300	**194220**	SAF / Sauer
1057006310	**194221**	SAF / Sauer
1057006320	**194222**	SAF / Sauer
1057006600	**1947703290**	SAF / Sauer
1057006610	**1947713290**	SAF / Sauer
1057006620	**1947723290**	SAF / Sauer
1057006700	**1947703290**	SAF / Sauer
1057006710	**1947713290**	SAF / Sauer
1057006720	**1947723290**	SAF / Sauer
1057006800	**1947903290**	SAF / Sauer
1057006810	**1947913290**	SAF / Sauer
1057006820	**1947923290**	SAF / Sauer
1057006900	**1947903290**	SAF / Sauer
1057006910	**1947913290**	SAF / Sauer
1057006920	**1947923290**	SAF / Sauer
1057051800	**1936504040**	SAF / Sauer
1057051800	**1936501230**	SAF / Sauer
1057051900	**1936514040**	SAF / Sauer
10572843005	**1989204040**	SAF / Sauer
1057301200	**1903214040**	SAF / Sauer
1057301210	**1903224040**	SAF / Sauer
1057301220	**1903234040**	SAF / Sauer
1057301300	**1909414040**	SAF / Sauer
1057301310	**1909424040**	SAF / Sauer
1057301320	**1909434040**	SAF / Sauer
1057306000	**1928314040**	SAF / Sauer
1057306010	**192832**	SAF / Sauer
1057306020	**192833**	SAF / Sauer
1057306100	**1928314040**	SAF / Sauer
1057306110	**192832**	SAF / Sauer
1057306120	**192833**	SAF / Sauer
1057312500	**1951504040**	SAF / Sauer
1057312500	**1951504040**	SAF / Sauer
1057312510	**1951514040**	SAF / Sauer
1057312510	**1951514040**	SAF / Sauer
1057312520	**1951524040**	SAF / Sauer
1057312520	**1951524040**	SAF / Sauer
1057313300	**1951704040**	SAF / Sauer
1057313310	**1951714040**	SAF / Sauer
1057313320	**195172**	SAF / Sauer
1057313400	**1951704040**	SAF / Sauer
1057313410	**1951714040**	SAF / Sauer
1057313420	**195172**	SAF / Sauer
1057314300	**1989214040**	SAF / Sauer
1057314310	**1989224040**	SAF / Sauer
1057314400	**1989214040**	SAF / Sauer
1057314410	**1989224040**	SAF / Sauer
1078439	**2912509560**	Volvo
1104230210	**151090**	Mercedes
1104230310	**151091**	Mercedes
1104230410	**151092**	Mercedes
1105060004	**1705005380**	MAN
1105060204	**1705025380**	MAN
1105060304	**1705005380**	MAN
1105060504	**1705025380**	MAN
1117991	**1903604040**	Fruehauf
115753	**1726305700**	DAF
115754	**1726305700**	DAF
115755	**1925605700**	DAF
115756	**1925605700**	DAF
116252211107	**191360**	Kassbohrer
116252211207	**191370**	Kassbohrer
116252221107	**191362**	Kassbohrer



OE	JURID	
116252221207	**191372**	Kassbohrer
116691	**172610**	DAF
116692	**172620**	DAF
116693	**1915005700**	DAF
116694	**1915005700**	DAF
117112	**172611**	DAF
117113	**172621**	DAF
117114	**1726315700**	DAF
117115	**1726315700**	DAF
117116	**1915015700**	DAF
117117	**1915015700**	DAF
117118	**1925615700**	DAF
117119	**1925615700**	DAF
11792411123310	**2996905440**	Kassbohrer
1179-2411123-310	**2996905440**	Kassbohrer
118105-52142	**2983505440**	A Teves
11810791682	**2951009560**	Kassbohrer
118107-91692	**2951009560**	A Teves
1204210110	**132430**	Mercedes
1204210210	**132430**	Mercedes
1204210310	**132430**	Mercedes
1204210610	**132430**	Mercedes
1204210810	**130550**	Mercedes
12182091	**2905405590**	Perrot
12182121	**2904905590**	Perrot
12182133	**2907705390**	Perrot
12182192	**2912605390**	SAF / Sauer
12182192	**2912605399**	SAF / Sauer
1267309	**1530404210**	Magirus
1267312	**1521505380**	Magirus
1267386	**1724805380**	Magirus
1267387E	**1727505380**	Magirus
1267399	**1724815380**	Magirus
1267403	**1726905380**	Magirus
1267408EY 8751-12	**1727505380**	Magirus
1267440	**1709413320**	Magirus
1267446	**1724815380**	Magirus
1267447	**1727515380**	Magirus
1269318K875118	**1705005380**	Magirus
1269319K875118	**1705005380**	Magirus
1269417	**1709205380**	Magirus
1269418	**1709205380**	Magirus
1269504	**1726905380**	Magirus
1269505	**1726905380**	Magirus
1269528	**1726905380**	Magirus
1269583	**1726905380**	Magirus
1269616	**1705005380**	Magirus
1269621	**1705025380**	Magirus
1269640	**1705015380**	Magirus
1269641	**1726915380**	Magirus
1269642	**1726915380**	Magirus
1269643	**1705015380**	Magirus
1269651	**1915313270**	Magirus
1278391	**170942**	Magirus
1278394	**1709403320**	Magirus
1278395E875112	**1724815380**	Magirus
12999546	**2907705390**	Perrot
12999737	**2912605390**	Wabco
12999737	**2912605399**	Wabco
13046044012	**571272J**	ATE
13046144122	**571272J**	ATE
13046144152	**571272J**	ATE
13057002	**1900415380**	Perrot
13057003	**1900415380**	Perrot
13057004	**1530405360**	Perrot
13057005	**1530405360**	Perrot
13057021	**1969915380**	Perrot

JURID / All rights reserved 2005

OE	JURID	
13057024	**1907415380**	Perrot
13057035	**171670**	Perrot
13057036	**171660**	Perrot
13057039	**1530415360**	Perrot
13057042	**1900425380**	Perrot
13057043	**1900425380**	Perrot
13057045	**1900435380**	Perrot
13057048	**1907415450**	Perrot
13057049	**1907415450**	Perrot
13057050	**1969915450**	Perrot
13057051	**1969915450**	Perrot
13057053	**1128905360**	Perrot
13057071	**1928314040**	Perrot
13057074	**1101915460**	Perrot
13057075	**1101915460**	Perrot
13057076	**1302015460**	Perrot
13057077	**1302015460**	Perrot
13057078	**1503015460**	Perrot
13057079	**1503015460**	Perrot
13057096	**1726915380**	Perrot
13057097	**1101925460**	Perrot
13057098	**1101925460**	Perrot
13057099	**1101935460**	Perrot
13057100	**1101935460**	Perrot
13057109	**1302025460**	Perrot
13057110	**1302025460**	Perrot
13057111	**1302035460**	Perrot
13057112	**1302035460**	Perrot
13057119	**1503025460**	Perrot
13057120	**1503025460**	Perrot
13057121	**1503025460**	Perrot
13057122	**1503025460**	Perrot
13057128	**1972315460**	Perrot
13057142	**197300**	Perrot
13057170	**1982305380**	Perrot
13057177	**1713515460**	Perrot
13057181	**191700**	Perrot
13057187	**1530304210**	Perrot
13057190	**1982305380**	Perrot
13057191	**1983805380**	Perrot
13057192	**1982403320**	Perrot
13057194	**157430**	Perrot
13057198	**1982109580**	Perrot
13057199	**192240**	Perrot
13057200	**170981**	Perrot
13057201	**1792403320**	Perrot
13057202	**1792403320**	Perrot
13057203	**1972315460**	Perrot
13057206	**176880**	Perrot
13057216	**1983815380**	Perrot
13057217	**1982413320**	Perrot
13057220	**1982315380**	Perrot
13057221	**1982315380**	Perrot
13057225	**1991803320**	Perrot
13057227	**1713515460**	Perrot
13057230	**1969015460**	Perrot
13057231	**1968715460**	Perrot
13057232	**130130**	Perrot
13057237	**1320305460**	Perrot
13057242	**158390**	Perrot
13057255	**1911405380**	Perrot
13057256	**1911405380**	Perrot
13057257	**1994605450**	Perrot
13057259	**1994605380**	Perrot
13057265	**1991813320**	Perrot
13057266	**1991829530**	Perrot
13057292	**1734005380**	Perrot

OE	JURID	
13057298	**1128905360**	Perrot
13057300	**1727505380**	Perrot
13057301	**1726905380**	Perrot
13057302	**1726905380**	Perrot
13057303	**1709205380**	Perrot
13057304	**1709205380**	Perrot
13057305	**1705005380**	Perrot
13057306	**1705005380**	Perrot
13057307	**195920**	Perrot
13057308	**1541905380**	Perrot
13057312	**195862**	Perrot
13057317	**1726915380**	Perrot
13057318	**1726915380**	Perrot
13057336	**1788105050**	Perrot
13057337	**1572805460**	Perrot
13057338	**112903**	Perrot
13057347	**1519205300**	Perrot
13057349	**1907615380**	Perrot
13057350	**1982305380**	Perrot
13057352	**1530615460**	Perrot
13057358	**1788205380**	Perrot
13057361	**1530504210**	Perrot
13057364	**1129005380**	Perrot
13057379	**1128505350**	Perrot
13057383	**1574005910**	Perrot
13057406	**1734015380**	Perrot
13057412	**1994605380**	Perrot
13057431	**1901915380**	Perrot
13057437	**1101915460**	Perrot
13057438	**1101915460**	Perrot
13057441	**1302015460**	Perrot
13057442	**1302015460**	Perrot
13057445	**1709403320**	Perrot
13057448	**1907615380**	Perrot
13057451	**176881**	Perrot
13057453	**170982**	Perrot
13057455	**1982119580**	Perrot
13057457	**192241**	Perrot
13057460	**1705015380**	Perrot
13057461	**1705025380**	Perrot
13057469	**1530415360**	Perrot
13057475	**1969915380**	Perrot
13057497	**1788115050**	Perrot
13057502	**1709603270**	Perrot
13057503	**1709603270**	Perrot
13057517	**1926305380**	Perrot
13057518	**1926305380**	Perrot
13057519	**1926205380**	Perrot
13057520	**1926205380**	Perrot
13057522	**1950313320**	Perrot
13057547	**1713515460**	Perrot
13057550	**110270**	Perrot
13057589	**1969025460**	Perrot
13057594	**1958635460**	Perrot
13057595	**1917035460**	Perrot
13057624	**1950303320**	Perrot
13057629	**1969915450**	Perrot
13057630	**1969915450**	Perrot
13057656	**1969915450**	Perrot
13057661	**1926205380**	Perrot
13057662	**1926205380**	Perrot
13057665	**1926305380**	Perrot
13057666	**1926305380**	Perrot
13057684	**1994605450**	Perrot
13057685	**1908415380**	Perrot
13057687	**1530404210**	Perrot
13057692	**1926205380**	Perrot

OE	JURID	
13057693	**1926205380**	Perrot
13057694	**1926305380**	Perrot
13057695	**1926305380**	Perrot
13057696	**1926215380**	Perrot
13057697		Perrot
13057698		Perrot
13057699		Perrot
13057700	**1926305380**	Perrot
13057701		Perrot
13057702		Perrot
13057703		Perrot
13057740		Perrot
13057741		Perrot
13057742		Perrot
13057743		Perrot
13057744		Perrot
13057745		Perrot
13057746		Perrot
13057747		Perrot
13057748		Perrot
13057749		Perrot
13057750		Perrot
13057751		Perrot
13057838	**1926305380**	Wabco
13057839	**1926305380**	Wabco
13075491	**1900435380**	Perrot
13075492	**1900435380**	Perrot
13075493	**1530404210**	Perrot
131157530	**1774215380**	Kassbohrer
131157531	**1774215380**	Kassbohrer
13157002	**1726905380**	Perrot
13157003	**1726905380**	Perrot
13157004	**153040**	Perrot
13157005	**1726905380**	Perrot
13157006	**1726905380**	Perrot
13157007	**1726905380**	Perrot
13157008	**1726905380**	Perrot
13157011	**1709205460**	Perrot
13157012	**1709205460**	Perrot
13157013	**1709205460**	Perrot
13157020	**1705005380**	Perrot
13157021	**1705005380**	Perrot
13157022	**1705005380**	Perrot
13157023	**1705005380**	Perrot
13157024	**151640**	Perrot
13157025	**151650**	Perrot
13157026	**1516305460**	Perrot
13157027	**1516305460**	Perrot
13157028	**1530615460**	Perrot
13157029	**1530605460**	Perrot
13157030	**156500**	Perrot
13157031	**153010**	Perrot
13157032	**1521505380**	Perrot
13157037	**1727505380**	Perrot
13157038	**1727505380**	Perrot
13157040	**1724805380**	Perrot
13157041	**1724805380**	Perrot
13157047	**150990**	Perrot
13157048	**150980**	Perrot
13157051	**1727205460**	Perrot
13157053	**191350**	Perrot
13157054	**191340**	Perrot
13157059	**191640**	Perrot
13157060	**191630**	Perrot
13157061	**173000**	Perrot
13157062	**191350**	Perrot
13157063	**191340**	Perrot

JURID / All rights reserved 2005



OE	JURID	
13157064	**1901905380**	Perrot
13157067	**170800**	Perrot
13157072	**1727505380**	Perrot
13157073	**1734005380**	Perrot
13157082	**1128405360**	Perrot
13157091	**178470**	Perrot
13157092	**178471**	Perrot
13157100	**171352**	Perrot
13157109	**151990**	Perrot
13157110	**151990**	Perrot
13157111	**1530504210**	Perrot
13157112	**1530504210**	Perrot
13157117	**1530304210**	Perrot
13157120	**1534004210**	Perrot
13157121	**1530304210**	Perrot
13157123	**1515005380**	Perrot
13157125	**1517405380**	Perrot
13157132	**131041**	Perrot
13157136	**1320501160**	Perrot
13157137	**1320501160**	Perrot
13157140	**1320305460**	Perrot
13157141	**1320305460**	Perrot
13157142	**1320305460**	Perrot
13157146	**112830**	Perrot
13157147	**1128405360**	Perrot
13157148	**1128405360**	Perrot
13157152	**1129005380**	Perrot
13157156	**1128405360**	Perrot
13157157	**1128405360**	Perrot
13157160	**112830**	Perrot
13157161	**112830**	Perrot
13157163	**1128604210**	Perrot
13157164	**1128604210**	Perrot
13157167	**1128205300**	Perrot
13157168	**1128205300**	Perrot
13157174	**111060**	Perrot
13157179	**1128505350**	Perrot
13157180	**112851**	Perrot
13157181	**1128505350**	Perrot
13157198	**1128405360**	Perrot
13157199	**1128405360**	Perrot
13157201	**1709205460**	Perrot
13157203	**1709403320**	Perrot
13157211	**1517405380**	Perrot
13157227	**1515005380**	Perrot
13157228	**1515005380**	Perrot
13157229	**1517405380**	Perrot
13157230	**1517405380**	Perrot
13157234	**1724805380**	Perrot
13157235	**192980**	Perrot
13157236	**191340**	Perrot
13157237	**1709403320**	Perrot
13157238	**131040**	Perrot
13157239	**131040**	Perrot
13157244	**1129005380**	Perrot
13157245	**1727505380**	Perrot
13157254	**1726905380**	Perrot
13157255	**1726905380**	Perrot
13157267	**191650**	Perrot
13157275	**170800**	Perrot
13157276	**170801**	Perrot
13157277	**170802**	Perrot
13157282	**1738903270**	Kassbohrer
13157282	**1738903270**	Perrot
13157294	**170800**	Perrot
13157295	**170809**	Perrot
13157296	**170809**	Perrot



OE	JURID	
13157297	**191631**	Perrot
13157298	**191632**	Perrot
13157299	**191633**	Perrot
13157312	**1128405360**	Perrot
13157313	**197300**	Perrot
13157343	**192980**	Perrot
13157357	**1530615460**	Perrot
13157363	**1727205460**	Perrot
13157365	**1740805380**	Perrot
13157370	**1530605460**	Perrot
13157383	**1733903320**	Perrot
13157384	**1901915380**	Perrot
13157390	**1763503320**	Perrot
13157391	**1763503320**	Perrot
13157393	**1129005380**	Perrot
13157395	**1128405360**	Perrot
13157396	**1128405360**	Perrot
13157397	**112821**	Perrot
13157398	**1128205300**	Perrot
13157401	**173390**	Perrot
13157404	**1129005380**	Perrot
13157406	**170800**	Perrot
13157408	**173000**	Perrot
13157411	**1727505380**	Perrot
13157415	**1901915380**	Perrot
13157426	**1713505460**	Perrot
13157427	**1713505460**	Perrot
13157431	**1901905380**	Perrot
13157437	**1129005380**	Perrot
13157443	**1775903270**	Perrot
13157456	**1517405380**	Perrot
13157457	**1530605460**	Perrot
13157458	**191341**	Perrot
13157459	**1727205460**	Perrot
13157470	**1734005380**	Perrot
13157472	**1129005380**	Perrot
13157474	**1709205460**	Perrot
13157483	**1128905360**	Perrot
13157490	**1516305460**	Perrot
13157491	**1530615460**	Perrot
13157492	**1503015460**	Perrot
13157493	**1503015460**	Perrot
13157494	**1503015460**	Perrot
13157495	**1503015460**	Perrot
13157496	**1503025460**	Perrot
13157497	**1503025460**	Perrot
13157499	**1734005380**	Perrot
13157500	**173000**	Perrot
13157511	**1727505380**	Perrot
13157518	**1726905380**	Perrot
13157519	**1726905380**	Perrot
13157520	**1709205460**	Perrot
13157521	**1709205460**	Perrot
13157524	**157521**	Perrot
13157525	**157520**	Perrot
13157526	**157520**	Perrot
13157529	**157270**	Perrot
13157530	**1774215380**	Perrot
13157531	**1774215380**	Perrot
13157538	**191650**	Perrot
13157540	**1724805380**	Perrot
13157541	**1705005380**	Perrot
13157542	**1705005380**	Perrot
13157545	**1907615380**	Perrot
13157546	**1907615380**	Perrot
13157548	**170310**	Perrot
13157551	**191341**	Perrot



OE	JURID	
13157571	**1734005380**	Perrot
13157573	**1534004210**	Perrot
13157574	**1530304210**	Perrot
13157579	**1517405380**	Perrot
13157599	**1774205380**	Perrot
13157600	**1774205380**	Perrot
13157601	**1907605380**	Perrot
13157602	**1907605380**	Perrot
13157604	**1726915380**	Perrot
13157605	**1907615380**	Perrot
13157606	**1907615380**	Perrot
13157607	**1774215380**	Perrot
13157608	**1774215380**	Perrot
13157610	**1724805380**	Perrot
13157611		Perrot
13157612	**1972315460**	Perrot
13157614	**170310**	Perrot
13157625	**1302015460**	Perrot
13157626	**1302015460**	Perrot
13157627	**1101915160**	Perrot
13157628	**1101915160**	Perrot
13157638	**1530615460**	Perrot
13157641	**1789703290**	Perrot
13157642	**1789703290**	Perrot
13157644	**1101915160**	Perrot
13157645	**1101915160**	Perrot
13157646	**1101925460**	Perrot
13157647	**1101925460**	Perrot
13157648	**1101935460**	Perrot
13157649	**1101935460**	Perrot
13157650	**1302015460**	Perrot
13157651	**1302015460**	Perrot
13157652	**1302025460**	Perrot
13157653	**1302025460**	Perrot
13157654	**1302035460**	Perrot
13157655	**1302035460**	Perrot
13157657	**1101925460**	Perrot
13157658	**1101925460**	Perrot
13157659	**1101935460**	Perrot
13157660	**1101935460**	Perrot
13157661	**1302025460**	Perrot
13157662	**1302025460**	Perrot
13157663	**1302035460**	Perrot
13157664	**1302035460**	Perrot
13157666	**157461**	Perrot
13157667	**157461**	Perrot
13157671	**1969005460**	Perrot
13157673	**1503015460**	Perrot
13157674	**1503015460**	Perrot
13157675	**1503025460**	Perrot
13157676	**1503025460**	Perrot
13157677	**1503025460**	Perrot
13157678	**1503025460**	Perrot
13157679	**1519305300**	Perrot
13157680	**1503015460**	Perrot
13157681	**1503015460**	Perrot
13157682	**1503025460**	Perrot
13157683	**1503025460**	Perrot
13157684	**1503025460**	Perrot
13157685	**1503025460**	Perrot
13157687	**1709403320**	Perrot
13157695	**1763503320**	Perrot
13157696	**1763503320**	Perrot
13157713	**1516305460**	Perrot
13157714	**1530615460**	Perrot
13157739	**190193**	Perrot
13157742	**1581703320**	Perrot

JURID / All rights reserved 2005

OE	JURID	
13157743	**1581703320**	Perrot
13157744	**1790003270**	Perrot
13157745	**1790003270**	Perrot
13157753	**173390**	Perrot
13157766	**1740835380**	Perrot
13157770	**112903**	Perrot
13157779	**1515005380**	Perrot
13157781	**172752**	Perrot
13157782	**1779223320**	Perrot
13157783	**1779223320**	Perrot
13157814	**1774215380**	Perrot
13157815	**1774215380**	Perrot
13157816	**1907615380**	Perrot
13157826	**1900415380**	Perrot
13157835	**1983805380**	Perrot
13157888	**1519205300**	Perrot
13157908	**1907415380**	Perrot
13157909	**1907415380**	Perrot
13157910	**1969915380**	Perrot
13157911	**1969915380**	Perrot
13157941	**1963415380**	Perrot
13157961	**1972315460**	Perrot
13157988	**1774215380**	Perrot
13157989	**1774215380**	Perrot
13157990	**1908415380**	Perrot
13157991	**1908415380**	Perrot
133459	**151850**	Scania
133460	**1716101820**	Scania
13792	**1936504040**	Trailor
13792	**1936501230**	Trailor
13793	**1936514040**	Trailor
1390428	**2910815390**	Scania
14201420	**571272J**	Mercedes
14201620	**1101915460**	Mercedes
1424290301	**1128504210**	Magirus
1424300302	**1320301030**	Magirus
1424-30-0302	**1320301030**	Magirus
1439324	**2910815390**	DAF
1504634	**1766401820**	Volvo
1504635	**1766401820**	Volvo
1504636	**1766401820**	Volvo
1504637	**1766401820**	Volvo
1504643	**1956011820**	Volvo
1504644	**1956011820**	Volvo
1504645	**1956011820**	Volvo
1504646	**1956021820**	Volvo
1504652	**1946701820**	Volvo
1504653	**1946701820**	Volvo
1504661	**1956211820**	Volvo
1504662	**1956211820**	Volvo
1507997000	**1949003290**	SAF / Sauer
1507997010	**1949013290**	SAF / Sauer
1507997020	**194902**	SAF / Sauer
1507997100	**1949003290**	SAF / Sauer
1507997110	**1949013290**	SAF / Sauer
1507997120	**194902**	SAF / Sauer
15227419T	**2913109560**	Rockwell
1527633	**2910815390**	Scania
15524835A	**2912409560**	ROR
1617343	**2910815390**	DAF
162868	**151850**	Scania
162869	**1907501820**	Scania
162978	**1716101820**	Scania
163471	**155100**	Scania
163472	**175120**	Scania
170571	**172611**	DAF
170572	**172621**	DAF

OE	JURID	
170573	**1726325700**	DAF
170574	**1726325700**	DAF
170575	**1915015700**	DAF
170576	**1915015700**	DAF
17157601	**1907605380**	Perrot
179-2411121-31D	**2974705440**	Kassbohrer
179241112331	**2996905440**	Evobus
1792411123310	**2996905440**	Kassbohrer
179-2411123-310	**2996905440**	Kassbohrer
179-2411123-310	**2996905440**	Kassbohrer
179-2411123-310	**2996905440**	Kassbohrer
179241112431D	**2996905440**	Kassbohrer
18021	**2910815390**	Knorr
18023	**2910815390**	Knorr
1804200510	**153730**	Mercedes
1804200710	**153730**	Mercedes
1804210110	**153730**	Mercedes
1804210210	**153730**	Mercedes
1804210610	**153730**	Mercedes
1804210710	**153730**	Mercedes
1804211010	**151091**	Mercedes
181814	**1939301820**	Scania
181814	**1939301230**	Scania
1834210010	**110310**	Mercedes
1874210610	**110311**	Mercedes
1874210710	**110312**	Mercedes
187593	**172310**	DAF
1884210010	**152691**	Mercedes
1884210310	**152691**	Mercedes
1902185	**1938405380**	Iveco
1902185	**1938405380**	Iveco
1902186	**1938415380**	Iveco
1902186	**1938415380**	Iveco
1902187	**1938425380**	Iveco
1902187	**1938425380**	Iveco
1903257	**1740805380**	Iveco
1903258	**1740815380**	Iveco
1903284	**170980**	Iveco
1903286	**170981**	Iveco
1903288	**192240**	Iveco
1903289	**192241**	Iveco
1903306	**177690**	Iveco
1903347	**178272**	Iveco
1903480	**1938405380**	Iveco
1903481	**1938415380**	Iveco
1903481	**1938415380**	Iveco
1903482	**1938425380**	Iveco
1903482	**1938425380**	Iveco
1903490	**1763503320**	Iveco
1903491	**192240**	Iveco
190440707	**1515005380**	Steyr
190440708	**1517405380**	Steyr
1906000	**1991803320**	Iveco
1906027	**1503005460**	Iveco
1906028	**1503015460**	Iveco
1906029	**1503025460**	Iveco
1906035	**1991813320**	Iveco
1906036	**1991823320**	Iveco
1906047	**170981**	Iveco
1906055	**1792403320**	Iveco
1906065	**1503005460**	Iveco
1906066	**1503015460**	Iveco
1906067	**1503025460**	Iveco
1906068	**1792413320**	Iveco
1906069	**1792423320**	Iveco
1906076	**1763513320**	Iveco
1906077	**1763523320**	Iveco

OE	JURID	
1906083	**1709205380**	Iveco
1906085	**1727505380**	Iveco
1906087	**197860**	Iveco
1906088	**197861**	Iveco
1906091	**1778105380**	Iveco
1906092	**1778115380**	Iveco
1906093	**1778125380**	Iveco
1906097	**1734005380**	Iveco
1906098	**1727515380**	Iveco
1906099	**172752**	Iveco
1906100	**1962203320**	Iveco
1906101	**1962213320**	Iveco
1906103	**1726905380**	Iveco
1906105	**1982403320**	Iveco
1906113	**1705005380**	Magirus
1906113	**1962005380**	Iveco
1906115	**1962005380**	Iveco
1906117	**1782705380**	Iveco
1906121	**1788105050**	Iveco
1906123	**1788205380**	Iveco
1906124	**1726915380**	Iveco
1906125	**172692**	Iveco
1906126	**1734015380**	Iveco
1906127	**173402**	Iveco
1906129	**1788215380**	Iveco
1906132	**176880**	Iveco
1906134	**1782915380**	Iveco
1906136	**1783105380**	Iveco
1906137	**1783115380**	Iveco
1906138	**170983**	Iveco
1906139	**170984**	Iveco
1906140	**192241**	Iveco
1906141	**192242**	Iveco
1906142	**1705025380**	Magirus
1906142	**1962015380**	Iveco
1906143	**1962025380**	Iveco
1906149	**1782715380**	Iveco
1906150	**1962015380**	Iveco
1906161	**179930**	Iveco
1906162	**179931**	Iveco
1906163	**179932**	Iveco
1906164	**192200**	Iveco
1906165	**192201**	Iveco
1906166	**192202**	Iveco
1906167	**1788115050**	Iveco
1906170	**2903204240**	Iveco
1906176	**1938405380**	Iveco
1906177	**1938415380**	Iveco
1906178	**1938425380**	Iveco
1906191	**2901104240**	Iveco
1906197	**1709603270**	Iveco
1906198	**1709613270**	Iveco
1906199	**170962**	Iveco
1906200	**1938505380**	Iveco
1906201	**1926205380**	Iveco
1906202	**1926305380**	Iveco
1906221	**1950303320**	Iveco
1906222	**1950313320**	Iveco
1906223	**195032**	Iveco
1906230	**1573205380**	Iveco
1906231	**1573215380**	Iveco
1906232	**1573225380**	Iveco
1906233	**1740805380**	Iveco
1906234	**1740815380**	Iveco
1906236	**1792403320**	Iveco
1906237	**1763503320**	Iveco
1906241	**1938415380**	Iveco

JURID / All rights reserved 2005

OE	JURID	
1906242	**1938425380**	Iveco
1906244	**1982305380**	Iveco
1906245	**1982315380**	Iveco
1906246	**1982325380**	Iveco
1906247	**1982403320**	Iveco
1906248	**1982413320**	Iveco
1906249	**198242**	Iveco
1906257	**1926205380**	Iveco
1906258	**1926205380**	Iveco
1906259	**1926215380**	Iveco
1906260	**1926215380**	Iveco
1906265	**1792413320**	Iveco
1906267	**1763513320**	Iveco
1906268	**1763523320**	Iveco
1906273	**1982119580**	Iveco
1906297	**2906709560**	Iveco
1906298	**2912104531**	Iveco
19062981	**2912104531**	Iveco
1906301	**1709403320**	Iveco
1906302	**1709413320**	Iveco
1906303	**170942**	Iveco
1906307	**1907605380**	Iveco
1906308	**1907615380**	Iveco
1906309	**1748109530**	Iveco
1906310	**1748119530**	Iveco
1906311	**1520709580**	Iveco
1906316	**1786909530**	Iveco
1906317	**1786919530**	Iveco
1906318	**1969403320**	Iveco
1906319	**1969413320**	Iveco
1906322	**1748203320**	Iveco
1906323	**1748213320**	Iveco
1906324	**1549409530**	Iveco
1906325	**1549419530**	Iveco
1906326	**1769209530**	Iveco
1906327	**1769219530**	Iveco
1906345	**2902409561**	Iveco
1906359	**170980**	Iveco
1906374	**1955303270**	Iveco
1906375		Iveco
1906376		Iveco
1906377	**1503005460**	Iveco
1906401	**2912104531**	Iveco
1906407	**1955303270**	Iveco
1906413	**1955303270**	Iveco
1906414	**1955603270**	Iveco
1906416	**2937409560**	Iveco
1906435	**1900415380**	Iveco
1906436	**1900425380**	Iveco
1906437	**1900435380**	Iveco
1906439	**2910815390**	Iveco
1906467	**2910815390**	IVECO
19225141004	**1991803320**	TEXTAR
19225141004	**1991809530**	TEXTAR
19712/18,10	**1900405380**	Beral
19712/18,10	**1900405450**	Beral
19712/18,10	**1974305380**	Beral
19712/18,10	**1974305450**	Beral
19786178008	**1982303320**	TEXTAR
19786178008	**1982305380**	TEXTAR
204552	**2910815390**	BOVA
205746	**172010**	DAF
207841800404	**571272J**	Ferodo
2096934008	**2996905440**	TEXTAR
21006603	**1903604042**	ROR
21006604	**1903614042**	ROR
21010751	**1936904040**	ROR

OE	JURID	
21010752	**1936914040**	ROR
21010776	**1960403290**	ROR
21020777	**1960413290**	ROR
21200780D	**1960413290**	ROR
21200781D	**1960421230**	ROR
21200790D	**1903604042**	ROR
21200791D	**1903614042**	ROR
21200792D	**1936504042**	ROR
21200793	**1936504042**	ROR
21200794D	**1936904040**	ROR
21200795D	**1936914040**	ROR
2120776	**1960403290**	ROR
21209710	**1990803290**	ROR
21209711	**1990803290**	ROR
21222416		ROR
21222417		ROR
21222418		ROR
21222419		ROR
21222420		ROR
21222421		ROR
21222422		ROR
21222423		ROR
2305253	**1128504210**	Magirus
230-5253	**1128504210**	Magirus
24204120	**2907603010**	Mercedes
24204920	**2910815390**	Mercedes
24207828	**2909305390**	Mercedes
2424523	**1521505380**	Magirus
24475	**1969015460**	Knott
2474523	**1521505380**	Magirus
2474523EO5055-12	**1521505380**	Magirus
2475800EO501896	**1709205380**	Magirus
2475801EO501896	**1709205380**	Magirus
2476254EO505518	**1915303270**	Magirus
2476273EO505518	**1915303270**	Magirus
2530121927463	**1705025380**	FAUN
2530121927464	**1705025380**	FAUN
25540	**1968715460**	Knott
2554001	**1968715460**	Knott
2560503E510712	**1740805380**	Magirus
260808	**1732405700**	DAF
260809	**1732405700**	DAF
270524	**1799201820**	Volvo
270536-6	**1766401820**	Volvo
270537-4	**1766411820**	Volvo
270538-2	**1956001820**	Volvo
270539-0	**1956021820**	Volvo
270540-8	**1946701820**	Volvo
270541-6	**1946711820**	Volvo
270542-4	**1956201820**	Volvo
270542-4	**1956201230**	Volvo
270543-2	**1956221820**	Volvo
270544-0	**179990**	Volvo
270545-7	**179991**	Volvo
270696-8	**190170145327**	Volvo
270696-8	**190170155327**	Volvo
270830-3	**1799201820**	Volvo
270831-1	**1799211820**	Volvo
270832-9	**1994101820**	Volvo
270833-7	**1994111820**	Volvo
270834-5	**1993801820**	Volvo
270835-3	**1993811820**	Volvo
270836-1	**1993901820**	Volvo
270837-8	**1993911820**	Volvo
270838-6	**1994001820**	Volvo
270839-4	**1994011820**	Volvo
270936-8	**1799201820**	Volvo

OE	JURID	
270937-6	**1799211820**	Volvo
270938-4	**1994101820**	Volvo
270939-2	**1994111820**	Volvo
270940-0	**1993801820**	Volvo
270941-8	**1993811820**	Volvo
270942-6	**1993901820**	Volvo
270943-4	**1993911820**	Volvo
270944-2	**1994001820**	Volvo
270945-9	**1994011820**	Volvo
270972-3	**1994101820**	Volvo
270973-1	**1994111820**	Volvo
270974-9	**1993801820**	Volvo
270975-7	**1993811820**	Volvo
270976-5	**1993901820**	Volvo
270977-3	**1993911820**	Volvo
270978-1	**1994001820**	Volvo
270979-8	**1994011820**	Volvo
271102-6		Volvo
271103-4		Volvo
271138-0	**1988509530**	Volvo
271139-8	**1988519530**	Volvo
271249-5		Volvo
271250-3		Volvo
272515-0	**1766401820**	Volvo
272515-8	**191200**	Volvo
272516-6	**1946701820**	Volvo
272522-4	**1956011820**	Volvo
272528-1	**1956011820**	Volvo
272529-9	**1956211820**	Volvo
272545-5	**1766401820**	Volvo
272546-3	**1766411820**	Volvo
272547-1	**1946701820**	Volvo
272548-9	**1946711820**	Volvo
272549-7	**1956011820**	Volvo
272550-5	**1956021820**	Volvo
272551	**1956211820**	Volvo
272552	**1956221820**	Volvo
272563-3	**171030**	Volvo
272564-6	**1766401820**	Volvo
272565-3	**1946711820**	Volvo
272584-4	**1956021820**	Volvo
272585-1	**1956221820**	Volvo
272614	**1782715380**	Volvo
272614-9	**1782705380**	Volvo
272615	**1782705380**	Volvo
272621	**1962005380**	Volvo
272621-4	**1962015380**	Volvo
272622	**1962015380**	Volvo
272649-5	**1782905380**	Volvo
272650	**1782905380**	Volvo
272651-1	**1783105380**	Volvo
272652	**1783105380**	Volvo
272672-7	**1956021820**	Volvo
272693-3	**1766401820**	Volvo
272694-1	**1956011820**	Volvo
272695	**1946701820**	Volvo
272696	**1956211820**	Volvo
272710-5	**1979905450**	Volvo
272711-3	**1979915450**	Volvo
272714-7	**1780401820**	Volvo
272715-5	**1780411820**	Volvo
272716-3	**1962203320**	Volvo
272717-0	**1962213320**	Volvo
272724-6	**1938505380**	Volvo
272734-5	**1946701820**	Volvo
272735-2	**1946711820**	Volvo
272736-0	**1956201820**	Volvo

JURID / All rights reserved 2005

OE	JURID	
272736-0	**1956201230**	Volvo
272737-8	**1956221820**	Volvo
272742-8	**1766411820**	Volvo
272743-6	**1956021820**	Volvo
272744-4	**1946701820**	Volvo
272745-1	**1946711820**	Volvo
272746-9	**1956211820**	Volvo
272747-7	**1956221820**	Volvo
272748-5	**179990**	Volvo
272749-3	**179991**	Volvo
272754-3		Volvo
272785-7	**1766401820**	Volvo
272786-5	**1766411820**	Volvo
272787-3	**1946701820**	Volvo
272788-1	**1946711820**	Volvo
272806-1	**1988509530**	Volvo
272807-9	**1988519530**	Volvo
272849-1		Volvo
272850-9		Volvo
272886-3	**1988509530**	Volvo
272887-1	**1988519530**	Volvo
272888-9	**1956001820**	Volvo
272889-7	**1956011820**	Volvo
272890-5	**1946701820**	Volvo
272891-3	**1946711820**	Volvo
272892-1	**1956201820**	Volvo
272892-1	**1956201230**	Volvo
272893-9	**1956211820**	Volvo
272894-7	**179990**	Volvo
272895-4	**179991**	Volvo
275794-6	**190170145327**	Volvo
275795-4	**190170155327**	Volvo
275820	**132130**	Volvo
275829	**152160**	Volvo
275859	**173800**	Volvo
275860	**173810**	Volvo
275866	**172790**	Volvo
275867	**172770**	Volvo
275868	**191550**	Volvo
275870	**171030**	Volvo
275871	**191200**	Volvo
275873-8	**152160**	Volvo
275881-1	**173810**	Volvo
275882	**171030**	Volvo
275883	**191200**	Volvo
275889	**172770**	Volvo
275890	**191550**	Volvo
275892	**171030**	Volvo
275893	**191200**	Volvo
275971-0		Volvo
275972-8		Volvo
275973-6		Volvo
275974-4		Volvo
275990-0	**1799201820**	Volvo
275991-8	**1799211820**	Volvo
275992-6	**1994101820**	Volvo
275993-4	**1994111820**	Volvo
275994-2	**1993801820**	Volvo
275995-9	**1993811820**	Volvo
275996-7	**1993901820**	Volvo
275997-5	**1993911820**	Volvo
275998-3	**1994001820**	Volvo
275999-1	**1994011820**	Volvo
276040-3	**1766401820**	Volvo
276041-1	**1766411820**	Volvo
276042-9	**1956001820**	Volvo
276043-7	**1956011820**	Volvo

OE	JURID	
276044-5	**1946701820**	Volvo
276045-2	**1946711820**	Volvo
276046-0	**1956201820**	Volvo
276046-0	**1956201230**	Volvo
276047-8	**1956211820**	Volvo
276048-6	**179990**	Volvo
276049-4	**179991**	Volvo
276050-2	**1988509530**	Volvo
276051-0	**1988519530**	Volvo
276104-7	**190170145327**	Volvo
276105-4	**190170155327**	Volvo
27743	**1956021820**	Volvo
280340728	**1530605460**	Steyr
285191230	**1774215380**	Kassbohrer
286851	**1989015700**	DAF
286852	**1989005700**	DAF
287718	**1915005700**	DAF
287719	**1915005700**	DAF
287721	**1961705700**	DAF
2887063M1	**1128404210**	HANDAMG
290045	**1925605700**	DAF
290046	**1925605700**	DAF
2903718305	**571416J**	Textar
2907520005	**2907503341**	Textar
2907520005	**2907509561**	Textar
2909530014	**2909305390**	TEXTAR
2912427004	**2912405390**	Textar
2912529214	**2912509560**	Textar
291698151A	**571272J**	VW
291698151B	**571272J**	VW
2964269E510712	**1515005380**	Magirus
2964721E501412	**1724805380**	Magirus
2965182E501412	**1724815380**	Magirus
2966443	**1915313270**	Magirus
2966445	**1915313270**	Magirus
2966507E510718	**1515025380**	Magirus
2966629F500218	**1763503320**	Magirus
2966630E500218	**1763503320**	Magirus
2966745E510712	**1740815380**	Magirus
2966939	**1726905380**	Magirus
2966941	**1726905380**	Magirus
2967383E500218	**1763503320**	Magirus
2967384E500218	**1763513320**	Magirus
2969241E505512	**1734005380**	Magirus
2969241K501412	**1734005380**	Magirus
2969250E501412	**1734015380**	Magirus
2969250K501412	**1734015380**	Magirus
2969321EY505512	**1734005380**	Magirus
2969341EY505512	**1734015380**	Magirus
2969360EY505518	**1915313270**	Magirus
2969433EY505512	**1726905380**	Magirus
2969436EY505512	**1726915380**	Magirus
2969438EY505518	**1726905380**	Magirus
2969439EY505518	**1726915380**	Magirus
2969441EY505518	**1726905380**	Magirus
2969442EY505518	**1726915380**	Magirus
2969604EY505512	**1727505380**	Magirus
2969605EY505512	**1727515380**	Magirus
2969701E505518	**1763523320**	Magirus
2969702E505518	**1763523320**	Magirus
2969805EY505512	**1727515380**	Magirus
2974732508	**2910815390**	TEXTAR
2980086EY505518	**1705005380**	Magirus
2980087EY505518	**1705015380**	Magirus
2980088EY505518	**1705025380**	Magirus
2980089EY505518	**1705005380**	Magirus
2980090EY505518	**1705015380**	Magirus

OE	JURID	
2980091EY505518	**1705025380**	Magirus
2980095EY505512	**1726905380**	Magirus
2980096EY505512	**1726915380**	Magirus
2980105E505518	**1775903270**	Magirus
2980106E505518	**1775913270**	Magirus
2980109E505512	**1775803270**	Magirus
2980110E505512	**1775813270**	Magirus
2980833EY505518	**1938405380**	Magirus
2980834EY505518	**1938415380**	Magirus
2980835EY505518	**1938425380**	Magirus
2983257	**1782705380**	Magirus
2983260	**1782705380**	Magirus
2983263EY505512	**1780411820**	Magirus
2983264EY505512	**1780411820**	Magirus
2983266EY505518	**1962005380**	Magirus
2983267EY505518	**1962015380**	Magirus
2983269EY505518	**1962005380**	Magirus
2983270EY505518	**1962015380**	Magirus
2983272EY505518	**1962213320**	Magirus
2983273	**1962213320**	Magirus
2983273EY505518	**1962213320**	Magirus
2983274EY505518	**1962203320**	Magirus
2992336	**2909305390**	Iveco
2C54854	**2910815390**	Knorr
2C69823	**2910815390**	Knorr
2DO698151A	**2907603010**	VW
2DO698451B	**571950J-AS**	VW
2G35001/0302	**2900805440**	Knorr
2GSK35428	**2901505440**	Kassbohrer
3014210810	**1912505450**	Mercedes
3014211210	**1970605370**	Mercedes
3014211310	**1970615370**	Mercedes
3014211410	**1970625370**	Mercedes
3014211510	**1970605370**	Mercedes
3014211610	**1970615370**	Mercedes
3014211710	**1970625370**	Mercedes
3014211810	**1779505380**	Mercedes
3014211910	**1779515380**	Mercedes
3014212010	**177952**	Mercedes
3014212110	**1779505380**	Mercedes
3014212210	**1779515380**	Mercedes
3014212310	**177952**	Mercedes
3014212510	**1779515380**	Mercedes
3014212610	**177952**	Mercedes
3014212710	**177953**	Mercedes
3014212810	**1779515380**	Mercedes
3014212910	**177952**	Mercedes
3014213010	**1963205450**	Mercedes
3014213110	**196321**	Mercedes
3014213210	**196322**	Mercedes
3014213310	**1963205450**	Mercedes
3014213410	**196321**	Mercedes
3014213510	**196322**	Mercedes
3014213610	**178140**	Mercedes
3014213710	**178141**	Mercedes
3014213810	**178142**	Mercedes
3014213910	**178140**	Mercedes
3014214010	**178141**	Mercedes
3014214110	**178142**	Mercedes
3014214210	**177953**	Mercedes
3014215510	**1779505380**	Mercedes
3014215610	**1779515380**	Mercedes
3014215710	**177952**	Mercedes
3014215810	**1779505380**	Mercedes
3014215910	**1779515380**	Mercedes
3014216010	**177952**	Mercedes
3014216110	**1970615370**	Mercedes

JURID by Honeywell

© JURID / All rights reserved 2005


OE

JURID




OE

JURID




OE

JURID



OE	JURID		OE	JURID		OE	JURID	
3014216210	**1970625370**	Mercedes	3024231810	**1912505450**	Mercedes	3074210210	**1970635450**	Mercedes
3014216310	**1970635450**	Mercedes	3024231910	**191251**	Mercedes	3074210310	**1970615370**	Mercedes
3014216410	**1970615370**	Mercedes	3024232010	**191252**	Mercedes	3074210410	**1970625370**	Mercedes
3014216510	**1970625370**	Mercedes	3024232110	**1710505380**	Mercedes	3074210510	**1970625370**	Mercedes
3014216610	**1970635450**	Mercedes	3024232210	**1710515380**	Mercedes	3074210610	**1970615370**	Mercedes
3014230010	**1963205450**	Mercedes	3024232310	**171052**	Mercedes	3074210710	**1970625370**	Mercedes
3014230310	**1963205450**	Mercedes	3024232410	**1918205380**	Mercedes	3074210810	**1970635450**	Mercedes
3014231510	**1949515050**	Mercedes	3024232510	**1918215380**	Mercedes	3074210910	**1970615370**	Mercedes
3014231610	**1949525050**	Mercedes	3024232610	**1918225380**	Mercedes	3074211010	**1970625370**	Mercedes
3014231710	**1949535050**	Mercedes	3024232710	**1946605450**	Mercedes	3074211110	**1970635450**	Mercedes
3014231810	**1949515050**	Mercedes	3024232810	**1946605450**	Mercedes	3074211210	**1779505380**	Mercedes
3014231910	**1949525050**	Mercedes	3024232910	**1946605450**	Mercedes	3074211510	**1779505380**	Mercedes
3014232010	**1949535050**	Mercedes	3024233010	**1768205380**	Mercedes	3074211610	**1779505380**	Mercedes
3014232110	**1970715370**	Mercedes	3024233110	**1768205380**	Mercedes	3074212410	**1970605370**	Mercedes
3014232210	**1970725370**	Mercedes	3024233210	**1768205380**	Mercedes	3074212510	**1970615370**	Mercedes
3014232310	**1970735450**	Mercedes	3024233310	**1918205380**	Mercedes	3074212610	**1970625370**	Mercedes
3014232410	**1970715370**	Mercedes	3024233410	**1918215380**	Mercedes	3074212710	**1970605370**	Mercedes
3014232510	**1970725370**	Mercedes	3024233510	**1918225380**	Mercedes	3074212810	**1970615370**	Mercedes
3014232610	**1970735450**	Mercedes	3024233610	**1710505380**	Mercedes	3074212910	**1970625370**	Mercedes
3014234310	**1779515380**	Mercedes	3024233710	**1710515380**	Mercedes	3074213010	**1970605370**	Mercedes
3014234410	**177952**	Mercedes	3024233810	**171052**	Mercedes	3074213110	**1970615370**	Mercedes
3014234510	**177953**	Mercedes	3024233910	**1918205380**	Mercedes	3074213210	**1970625370**	Mercedes
3014234610	**1779515380**	Mercedes	3024234010	**1918215380**	Mercedes	3074213310	**1970605370**	Mercedes
3014234710	**177952**	Mercedes	3024234110	**1918225380**	Mercedes	3074213410	**1970615370**	Mercedes
3014234810	**177953**	Mercedes	3024234210	**1710505380**	Mercedes	3074213510	**1970625370**	Mercedes
3014234910	**1970615370**	Mercedes	3024234310	**1710515380**	Mercedes	3074213610	**1779505380**	Mercedes
3014235010	**1970625370**	Mercedes	3024234410	**171052**	Mercedes	3074213710	**1779515380**	Mercedes
3014235110	**1970635450**	Mercedes	3024235910	**1918205380**	Mercedes	3074213810	**177952**	Mercedes
3014235210	**1970615370**	Mercedes	3024236010	**1918215380**	Mercedes	3074213910	**1779505380**	Mercedes
3014235310	**1970625370**	Mercedes	3024236110	**1918225380**	Mercedes	3074214010	**1779515380**	Mercedes
3014235410	**1970635450**	Mercedes	3024236210	**1918205380**	Mercedes	3074214110	**177952**	Mercedes
3014235510	**196321**	Mercedes	3034230910	**1728505050**	Mercedes	3074214210	**1970615370**	Mercedes
3014235610	**196322**	Mercedes	303451	**1907501820**	Scania	3074214310	**1970625370**	Mercedes
3014235710	**196323**	Mercedes	303910	**1903204040**	DAF	3074214410	**1970635450**	Mercedes
3014235810	**196321**	Mercedes	3044230110	**191610**	Mercedes	3074214510	**1970615370**	Mercedes
3014235910	**196322**	Mercedes	3044230210	**191611**	Mercedes	3074214610	**1970625370**	Mercedes
3014236010	**196323**	Mercedes	3044230310	**191612**	Mercedes	3074214710	**1970635450**	Mercedes
3014236110	**1970715370**	Mercedes	3044230410	**191613**	Mercedes	3074214810	**1970605370**	Mercedes
3014236210	**1970725370**	Mercedes	3044232510	**1728515050**	Mercedes	3074214910	**1970625370**	Mercedes
3014236310	**1970735450**	Mercedes	305361	**1915015700**	DAF	3074215010	**1970635450**	Mercedes
3014236410	**1970715370**	Mercedes	3054210010	**1949415050**	Mercedes	3074215110	**1970605370**	Mercedes
3014236510	**1970725370**	Mercedes	3054210110	**1949425050**	Mercedes	3074215210	**1970625370**	Mercedes
3014236610	**1970735450**	Mercedes	3054210210	**1949435050**	Mercedes	3074215310	**1970635450**	Mercedes
3014237010	**1970605370**	Mercedes	3054210310	**191251**	Mercedes	3074215410	**1779505380**	Mercedes
3014237110	**1970615370**	Mercedes	3054210410	**191252**	Mercedes	3074215510	**1779515380**	Mercedes
3014237210	**1970625370**	Mercedes	3054210510	**191253**	Mercedes	3074215610	**177952**	Mercedes
3014237910	**1970705370**	Mercedes	3054210610	**1912505450**	Mercedes	3074215710	**1970635450**	Mercedes
3014238010	**1970715370**	Mercedes	3054230310	**1949615050**	Mercedes	3074215810	**1970625370**	Mercedes
3014238110	**1970725370**	Mercedes	3054230410	**1949625050**	Mercedes	3074215910	**1970605370**	Mercedes
3024210010	**1710505380**	Mercedes	3054230510	**1949635380**	Mercedes	3074216010	**1970605370**	Mercedes
3024210310	**1912505450**	Mercedes	3054230610	**1946605450**	Mercedes	3074216110	**1970625370**	Mercedes
3024210410	**1912505450**	Mercedes	3054230710	**194661**	Mercedes	3074216210	**1970635450**	Mercedes
3024210510	**1912505450**	Mercedes	3054230810	**194662**	Mercedes	3074216310	**1970615370**	Mercedes
3024210610	**1912505450**	Mercedes	3054230910	**1949615050**	Mercedes	3074216410	**1970625370**	Mercedes
3024210710	**1912505450**	Mercedes	3054231010	**1949625050**	Mercedes	3074216510	**1970635450**	Mercedes
3024210810	**1912505450**	Mercedes	3054231110	**1949635380**	Mercedes	3074216610	**1970615370**	Mercedes
3024211310	**1710505380**	Mercedes	3054231210	**1946605450**	Mercedes	3074216710	**1970625370**	Mercedes
3024211410	**1710515380**	Mercedes	3054231310	**194661**	Mercedes	3074216810	**1970635450**	Mercedes
3024230010	**1918205380**	Mercedes	3054231410	**194662**	Mercedes	3074216910	**1970605370**	Mercedes
3024230110	**1918215380**	Mercedes	3054231510	**194669**	Mercedes	3074217010	**1970615370**	Mercedes
3024230210	**1918225380**	Mercedes	3057007800	**2909305390**	SAF / Sauer	3074217110	**1970625370**	Mercedes
3024230610	**1710505380**	Mercedes	3057008000	**2915905399**	SAF / Sauer	3074230610	**1970705370**	Mercedes
3024230710	**1710515380**	Mercedes	30570080000	**2912605390**	Sauer	3074230710	**1970715370**	Mercedes
3024230810	**171052**	Mercedes	30570080000	**2912605399**	Sauer	3074230810	**1970725370**	Mercedes
3024230910	**1918205380**	Mercedes	3057317900	**2912005390**	SAF	3074230910	**1970705370**	Mercedes
3024231010	**1918215380**	Mercedes	3074210010	**1970615370**	Mercedes	3074231010	**1970715370**	Mercedes
3024231110	**1918225380**	Mercedes	3074210110	**1970625370**	Mercedes	3074231110	**1970725370**	Mercedes

JURID / All rights reserved 2005

OE	JURID	
3074231810	**1970705370**	Mercedes
3074231910	**1970715370**	Mercedes
3074232010	**1970725370**	Mercedes
3074232110	**1970705370**	Mercedes
3074232210	**1970715370**	Mercedes
3074232310	**1970725370**	Mercedes
3074232410	**1970705370**	Mercedes
3074232510	**1970715370**	Mercedes
3074232610	**1970725370**	Mercedes
3074232710	**1970705370**	Mercedes
3074232810	**1970715370**	Mercedes
3074232910	**1970725370**	Mercedes
3074233010	**1963205450**	Mercedes
3074233110	**196321**	Mercedes
3074233210	**196322**	Mercedes
3074233310	**1963205450**	Mercedes
3074233410	**196321**	Mercedes
3074233510	**196322**	Mercedes
3074234210	**1970715370**	Mercedes
3074234310	**1970725370**	Mercedes
3074234410	**1970735450**	Mercedes
3074234510	**1970715370**	Mercedes
3074234610	**1970725370**	Mercedes
3074234710	**1970735450**	Mercedes
3074234810	**1970715370**	Mercedes
3074234910	**1970725370**	Mercedes
3074235010	**1970735450**	Mercedes
3074235110	**1970715370**	Mercedes
3074235210	**1970725370**	Mercedes
3074235310	**1970735450**	Mercedes
3074235310	**1970735450**	Mercedes
3074235410	**1970715370**	Mercedes
3074235510	**1970725370**	Mercedes
3074235710	**1970715370**	Mercedes
3074235810	**1970725370**	Mercedes
3074235910	**1970735450**	Mercedes
3074236010	**1970715370**	Mercedes
3074236110	**1970725370**	Mercedes
3074236210	**1970735450**	Mercedes
3074236310	**1970715370**	Mercedes
3074236410	**1970725370**	Mercedes
3074236510	**1970735450**	Mercedes
3090044-3		Volvo
3090045-0		Volvo
3090343	**1799201820**	Volvo
3090344	**1799211820**	Volvo
3090345	**1994101820**	Volvo
3090346	**1994111820**	Volvo
3090347	**1993801820**	Volvo
3090348	**1993811820**	Volvo
3090349	**1993901820**	Volvo
3090350	**1993911820**	Volvo
3090351	**1994001820**	Volvo
3090352	**1994011820**	Volvo
3091274	**1766401820**	Volvo
3091276	**1956001820**	Volvo
3091278	**1946701820**	Volvo
3091280	**1956201820**	Volvo
3091280	**1956201230**	Volvo
3091282	**1979905450**	Volvo
3091284	**1988509530**	Volvo
3091452	**1799201820**	Volvo
3091453	**1799211820**	Volvo
3091454	**1994101820**	Volvo
3091455	**1994111820**	Volvo
3091456	**1993801820**	Volvo
3091457	**1993811820**	Volvo

OE	JURID	
3091458-4	**1993901820**	Volvo
3091459	**1993911820**	Volvo
3091460	**1994001820**	Volvo
3091461	**1994011820**	Volvo
309203010	**112801**	BPW
309203040	**112802**	BPW
309204010	**114781**	BPW
309204020	**114780**	BPW
309204050	**114781**	BPW
309204060	**114780**	BPW
309205040	**110841**	BPW
309205060	**1108401160**	BPW
309205070	**110841**	BPW
309205110	**110841**	BPW
309205120	**1108401160**	BPW
309205170	**1108401160**	BPW
309208090	**1155603320**	BPW
309208100	**1155603320**	BPW
309211010	**1500415380**	BPW
309211060	**1500405380**	BPW
309211070	**1500415380**	BPW
309211080	**1500405380**	BPW
309211120	**1500405380**	BPW
309211170	**1500405380**	BPW
309212010	**171830**	BPW
309213010	**1910224040**	BPW
309213020	**1910214040**	BPW
309213030	**1910214040**	BPW
309213040	**193962**	BPW
309213050	**193961**	BPW
309213090	**1957314040**	BPW
309213100	**1957304040**	BPW
309213280	**1957314040**	BPW
309213290	**1957304040**	BPW
309213310	**1957304040**	BPW
309213320	**1957314040**	BPW
309213330	**1957324040**	BPW
309213340	**1957324040**	BPW
309213350	**1957314040**	BPW
309213430	**1957314040**	BPW
309213440	**1957304040**	BPW
309213450	**1957314040**	BPW
309213460	**1957324040**	BPW
309213470	**1957314040**	BPW
309214010	**1910324040**	BPW
309214020	**1910314040**	BPW
309214030	**1910304040**	BPW
309214040	**1939704040**	BPW
309214050	**193972**	BPW
309214080	**1957414040**	BPW
309214100	**1939714040**	BPW
309214110	**193972**	BPW
309214120	**1957404040**	BPW
309214130	**1957414040**	BPW
309214230	**1957404040**	BPW
309214240	**1957424040**	BPW
309214250	**1957414040**	BPW
309214260	**1957414040**	BPW
309214270	**1957404040**	BPW
309214330	**1957404040**	BPW
309214340	**1957414040**	BPW
309214350	**1957424040**	BPW
309214450	**1957404040**	BPW
309214460	**1957414040**	BPW
309214470	**1957424040**	BPW
309219540	**1990204040**	BPW
309219550	**1990204040**	BPW

OE	JURID	
309219560	**1990214040**	BPW
309219570	**1990214040**	BPW
309219620	**1995203290**	BPW
309219630	**1995203290**	BPW
309219640	**199521**	BPW
309219650	**199521**	BPW
309219660	**199522**	BPW
309219670	**199522**	BPW
309219690	**1933803290**	BPW
309220010	**1524705380**	BPW
309220020	**1524715380**	BPW
309220030	**1524715380**	BPW
309220060	**151470**	BPW
309220120	**152570**	BPW
309220150	**1524705380**	BPW
309220170	**1524725380**	BPW
309220180	**1575114040**	BPW
309221010	**171220**	BPW
309221020	**171221**	BPW
309221030	**171222**	BPW
309221050	**171220**	BPW
309222010	**1711504040**	BPW
309222020	**1711504040**	BPW
309222040	**1711514040**	BPW
309222050	**1711504040**	BPW
309222080	**170160**	BPW
309222090	**170161**	BPW
309222100	**170161**	BPW
309222120	**1711514040**	BPW
309222170	**170160**	BPW
309222180	**1711504040**	BPW
309222250	**1711504040**	BPW
309225010	**1920004040**	BPW
309225020	**1920014040**	BPW
309225030	**1920024040**	BPW
309225040	**1920014040**	BPW
309225070	**190930**	BPW
309225080	**190931**	BPW
309225130	**1920014040**	BPW
309225160	**1920014040**	BPW
309225170	**1920004040**	BPW
309225400	**1920004040**	BPW
309225410	**1920014040**	BPW
309225420	**1920024040**	BPW
309225440	**1920004040**	BPW
309225450	**1920014040**	BPW
309225460	**1920024040**	BPW
309225480	**1920004040**	BPW
309225490	**1920014040**	BPW
309225500	**1920024040**	BPW
309226010	**1903204040**	BPW
309226030	**1920014040**	BPW
309226040	**1920024040**	BPW
309226050	**1920024040**	BPW
309226060	**1903204040**	BPW
309226080	**1903214040**	BPW
309226100	**1903204040**	BPW
309226110	**1920024040**	BPW
309226120	**1920024040**	BPW
309226210	**1903204040**	BPW
309226250	**1903204040**	BPW
309226260	**1903204040**	BPW
309226290	**1903214040**	BPW
309226310	**1903214040**	BPW
309226320	**1903204040**	BPW
309226450	**1903204040**	BPW
309226480	**1903204040**	BPW

JURID / All rights reserved 2005



OE	JURID	
309226560	**1903204040**	BPW
309226590	**1903224040**	BPW
309226640	**1903214040**	BPW
309226660	**1903204040**	BPW
309226670	**1903214040**	BPW
309226690	**1903224040**	BPW
309226760	**1903204040**	BPW
309226770	**1903214040**	BPW
309226780	**1903224040**	BPW
309226790	**1903214040**	BPW
309226840	**1903214040**	BPW
309226850	**1903204040**	BPW
309226860	**1903214040**	BPW
309226870	**1903224040**	BPW
309226900	**1903204040**	BPW
309227010	**1909404040**	BPW
309227020	**1909414040**	BPW
309227030	**1909414040**	BPW
309227040	**1909424040**	BPW
309227050	**1909414040**	BPW
309227060	**1909404040**	BPW
309227070	**1909414040**	BPW
309227150	**1909404040**	BPW
309227180	**1909404040**	BPW
309227190	**1909404040**	BPW
309227220	**1909414040**	BPW
309227230	**1909414040**	BPW
309227240	**1909404040**	BPW
309227260	**1909404040**	BPW
309227430	**1909404040**	BPW
309227450	**1909404040**	BPW
309227530	**1909404040**	BPW
309227570	**1909424040**	BPW
309227630	**1909414040**	BPW
309227650	**1909404040**	BPW
309227660	**1909414040**	BPW
309227680	**1909424040**	BPW
309227710	**1909404040**	BPW
309227720	**1909414040**	BPW
309227730	**1909424040**	BPW
309227740	**1909414040**	BPW
309227750	**1909414040**	BPW
309227760	**1909404040**	BPW
309227770	**1909414040**	BPW
309227780	**1909424040**	BPW
309228010	**198251**	BPW
309228020	**1982509550**	BPW
309228080	**198251**	BPW
309228180	**1959114040**	BPW
309228240	**198251**	BPW
309228250	**1959104040**	BPW
309228260	**195912**	BPW
309228280	**1959104040**	BPW
309228290	**1959114040**	BPW
309228300	**195912**	BPW
309228310	**1959114040**	BPW
309228320	**1959104040**	BPW
309228330	**1959114040**	BPW
309228340	**195912**	BPW
309229010	**1737704040**	BPW
309229020	**1737704040**	BPW
309229030	**177730**	BPW
309229080	**1737714040**	BPW
309229090	**177731**	BPW
309229300	**1737714040**	BPW
309229320	**1737724040**	BPW
309229340	**1737704040**	BPW



OE	JURID	
309229400	**1737704040**	BPW
309229430	**1737714040**	BPW
309229440	**1737704040**	BPW
309229450	**1737714040**	BPW
309229460	**1737724040**	BPW
309229480	**1737724040**	BPW
309229490	**1737714040**	BPW
309229500	**1737724040**	BPW
309229520	**1737714040**	BPW
309229530	**1737704040**	BPW
309229540	**1737714040**	BPW
309229550	**1737724040**	BPW
309230000	**190050**	BPW
309230010	**190050**	BPW
309230020	**190051**	BPW
309230030	**190052**	BPW
309234010	**190090**	BPW
309234020	**190091**	BPW
309234030	**190092**	BPW
309234070	**190091**	BPW
309234080	**190092**	BPW
309235080	**195760**	BPW
309235090	**195750**	BPW
309235143	**196020**	BPW
309235153	**196030**	BPW
309235220	**196020**	BPW
309235230	**196030**	BPW
309235240	**196021**	BPW
309235250	**196031**	BPW
309235260	**196022**	BPW
309235270	**196032**	BPW
3093259	**1907101230**	Volvo
3093261	**1906801230**	Volvo
3093263	**1907101230**	Volvo
3093265	**1906801230**	Volvo
3093531	**2913609560**	Volvo
3093532-7	**2913709560**	Volvo
3094104910	**1970615370**	Mercedes
3094202420	**1534905460**	Mercedes
3094202520	**1534905460**	Mercedes
3094202620	**1534905460**	Mercedes
3094204520	**1558005460**	Mercedes
3094204620	**1558005460**	Mercedes
3094204720	**1558005460**	Mercedes
3094205520	**1534915460**	Mercedes
3094205720	**1534905460**	Mercedes
3094205820	**1534915460**	Mercedes
3094206020	**1534905460**	Mercedes
3094210310	**1534905460**	Mercedes
3094210410	**1534915460**	Mercedes
3094210510	**1534925460**	Mercedes
3094210610	**1534905460**	Mercedes
3094210710	**1534915460**	Mercedes
3094210810	**1534925460**	Mercedes
3094210910	**1558005460**	Mercedes
3094211010	**1558015460**	Mercedes
3094211110	**1558025460**	Mercedes
3094211210	**1558005460**	Mercedes
3094211310	**1558015460**	Mercedes
3094211410	**1558025460**	Mercedes
3094211510	**1534905460**	Mercedes
3094211610	**1534915460**	Mercedes
3094211710	**1534925460**	Mercedes
3094211810	**1534905460**	Mercedes
3094211910	**1534915460**	Mercedes
3094212010	**1534925460**	Mercedes
3094212110	**1558005460**	Mercedes



OE	JURID	
3094212210	**1558015460**	Mercedes
3094212310	**1558025460**	Mercedes
3094212410	**1558005460**	Mercedes
3094212510	**1558015460**	Mercedes
3094212610	**1558025460**	Mercedes
3094212710	**1534905460**	Mercedes
3094212810	**1534905460**	Mercedes
3094212910	**1534905460**	Mercedes
3094213010	**1534915460**	Mercedes
3094213110	**1534925460**	Mercedes
3094213810	**1534905460**	Mercedes
3094214110	**1534905460**	A Teves
3094214110	**1534905460**	Mercedes
3094214210	**1534915460**	A Teves
3094214210	**1534915460**	Mercedes
3094214310	**1534925460**	A Teves
3094214310	**1534925460**	Mercedes
3094214510	**1534905460**	A Teves
3094214510	**1534905460**	Mercedes
3094214610	**1534915460**	A Teves
3094214610	**1534915460**	Mercedes
3094214710	**1534925460**	A Teves
3094214710	**1534925460**	Mercedes
3094214810	**1534995460**	A Teves
3094214810	**1534995460**	Mercedes
3094214910	**1534905460**	Mercedes
3094215010	**1534915460**	Mercedes
3094215110	**1534925460**	Mercedes
3094215210	**1558005460**	A Teves
3094215210	**1558005460**	Mercedes
3094215310	**1558015460**	A Teves
3094215310	**1558015460**	Mercedes
3094215410	**1558025460**	A Teves
3094215410	**1558025460**	Mercedes
3094215510	**1558005460**	A Teves
3094215510	**1558005460**	Mercedes
3094215610	**1558015460**	A Teves
3094215610	**1558015460**	Mercedes
3094215710	**1558025460**	A Teves
3094216710	**1534905460**	Mercedes
3094216810	**1534915460**	Mercedes
3094216910	**1534925460**	Mercedes
3095169	**1907101230**	Volvo
3095171	**1906801230**	Volvo
3095396	**2912509560**	Volvo
3097105-5	**1946701820**	Volvo
3097106-3	**1956201820**	Volvo
3097106-3	**1956201230**	Volvo
3097107-1	**179990**	Volvo
3097167	**1946701820**	Volvo
3097168	**1956201820**	Volvo
3097168	**1956201230**	Volvo
3097168	**1979905450**	VOLVO
3097169	**1979905450**	Volvo
3097275-6	**1994001820**	Volvo
3098264	**1909001230**	Volvo
3098268	**1906801230**	Volvo
3099533	**29151**	Volvo
3103251300	**1505705380**	Mercedes
3104210310	**1558035460**	Mercedes
3104210410	**1558045460**	Mercedes
3104210510	**1558055460**	Mercedes
3104210610	**1558035460**	Mercedes
3104210710	**1558035460**	Mercedes
3104210810	**1558055460**	Mercedes
3104210910	**1558005460**	Mercedes
3104211010	**1558015460**	Mercedes

JURID / All rights reserved 2005

OE	JURID	
3104211110	**1558025460**	Mercedes
3104211210	**1558005460**	Mercedes
3104211310	**1558015460**	Mercedes
3104211410	**1558025460**	Mercedes
3104211510	**1558005460**	Mercedes
3104211610	**1558015460**	Mercedes
3104211710	**1558025460**	Mercedes
3104211810	**1558035460**	Mercedes
3104211910	**1558035460**	Mercedes
3104212010	**1558055460**	Mercedes
3104212110	**1558035460**	Mercedes
3104212210	**1558045460**	Mercedes
3104212310	**1558055460**	Mercedes
3104212410	**1558035460**	Mercedes
3104212510	**1558045460**	Mercedes
3104212610	**1558055460**	Mercedes
3104212710	**1558035460**	Mercedes
3104212810	**1558045460**	Mercedes
3104212910	**1558055460**	Mercedes
3104213010	**1558045460**	Mercedes
3104213110	**1558055460**	Mercedes
3104213210	**1558035460**	Mercedes
3104213610	**1558035460**	A Teves
3104213610	**1558035460**	Mercedes
3104213710	**1558045460**	A Teves
3104213710	**1558045460**	Mercedes
3104213810	**1558055460**	A Teves
3104213810	**1558055460**	Mercedes
3104213910	**1558025460**	A Teves
3104214010	**1558035460**	A Teves
3104214010	**1558035460**	Mercedes
3104214110	**1558045460**	A Teves
3104214110	**1558045460**	Mercedes
3104214210	**1558055460**	A Teves
3104214410	**1558035460**	Mercedes
3104214510	**1558045460**	Mercedes
3104214610	**1558045460**	Mercedes
3104215110	**1505705380**	Mercedes
3104215210	**1505715380**	Mercedes
3104215310	**150572**	Mercedes
31135	**1705005380**	Knott
311503	**1530605460**	Knott
3124211010	**150900**	Mercedes
3124211110	**150900**	Mercedes
3124211310	**150901**	Mercedes
3124211410	**150902**	Mercedes
3124231010	**150890**	Mercedes
3124231410	**150890**	Mercedes
3124231510	**150891**	Mercedes
3124231910	**150892**	Mercedes
3124232110	**170590**	Mercedes
3124232210	**170591**	Mercedes
3124232310	**170592**	Mercedes
3124232410	**172580**	Mercedes
3124232510	**172581**	Mercedes
3124232610	**172582**	Mercedes
31320251NDW	**2983505440**	Lucas
3135714	**1517405380**	Knott
3135716	**1517405380**	Knott
31357A	**1517405380**	Knott
31357C	**1517405380**	Knott
313739	**1782905380**	DAF
313740	**1782905380**	DAF
313741	**1783105380**	DAF
313742	**1783105380**	DAF
313743	**1782705380**	DAF
313744	**1782705380**	DAF
313745	**1962015380**	DAF
313746	**1962015380**	DAF
3164210110	**1740995380**	Mercedes
3164210210	**1740905380**	Mercedes
3164210310	**1740915380**	Mercedes
3164210410	**1740995380**	Mercedes
3164210510	**1740905380**	Mercedes
3164210610	**1740915380**	Mercedes
3164211410	**1740995380**	Mercedes
3164211810	**1740905380**	Mercedes
3164212210	**1740995380**	Mercedes
3164212310	**1740905380**	Mercedes
3164212410	**1740915380**	Mercedes
3164212510	**1740915380**	Mercedes
3172311000	**190970**	Mercedes
3174210310	**190810**	Mercedes
3174210410	**190811**	Mercedes
3174210510	**190812**	Mercedes
3174210610	**190810**	Mercedes
3174210710	**190811**	Mercedes
3174210810	**190812**	Mercedes
3174210910	**190810**	Mercedes
3174211010	**190811**	Mercedes
3174211110	**190812**	Mercedes
3174211210	**191251**	Mercedes
3174211310	**191252**	Mercedes
3174211410	**191253**	Mercedes
3174211510	**191251**	Mercedes
3174211610	**191252**	Mercedes
3174211710	**191253**	Mercedes
3174211810	**190810**	Mercedes
3174211910	**190811**	Mercedes
3174212010	**190812**	Mercedes
3174212110	**190819**	Mercedes
3174212510	**1912505450**	Mercedes
3174212610	**191251**	Mercedes
3174212710	**191252**	Mercedes
3174212810	**190810**	Mercedes
3174212910	**190811**	Mercedes
3174213010	**190812**	Mercedes
3174213110	**190819**	Mercedes
3174213510	**191252**	Mercedes
3174213610	**191251**	Mercedes
3174213710	**1912505450**	Mercedes
3174213810	**1912505450**	Mercedes
3174213910	**191251**	Mercedes
3174214010	**191252**	Mercedes
3174214110	**1912505450**	Mercedes
3174214210	**191251**	Mercedes
3174214310	**191252**	Mercedes
3174214410	**1912505450**	Mercedes
3174214510	**1912505450**	Mercedes
3174214610	**191251**	Mercedes
3174214710	**191251**	Mercedes
3174214810	**191252**	Mercedes
3174214910	**191252**	Mercedes
3174215010	**1912505450**	Mercedes
3174215110	**1912505450**	Mercedes
3174215210	**191251**	Mercedes
3174215310	**191251**	Mercedes
3174215410	**191252**	Mercedes
3174215510	**191252**	Mercedes
3174215610	**1912505450**	Mercedes
3174215910	**1912505450**	Mercedes
3174230310	**190970**	Mercedes
3174230410	**190971**	Mercedes
3174230510	**190972**	Mercedes
3174230610	**190970**	Mercedes
3174230710	**190971**	Mercedes
3174230810	**190972**	Mercedes
3174230910	**190970**	Mercedes
3174231010	**190971**	Mercedes
3174231110	**190972**	Mercedes
3174231210	**190970**	Mercedes
3174231310	**190971**	Mercedes
3174231410	**190972**	Mercedes
3174231710	**190970**	Mercedes
3174231810	**190971**	Mercedes
3174231910	**190972**	Mercedes
3174232010	**190979**	Mercedes
3174232510	**1946605450**	Mercedes
3174232610	**194661**	Mercedes
3174232710	**194662**	Mercedes
3174232810	**1946605450**	Mercedes
3174232910	**1946605450**	Mercedes
3174233010	**194661**	Mercedes
3174233110	**194662**	Mercedes
3174233210	**1946605450**	Mercedes
3174233310	**194661**	Mercedes
3174233410	**194662**	Mercedes
3174233510	**1946605450**	Mercedes
3174233610	**194661**	Mercedes
3174233710	**194662**	Mercedes
3174233810	**1946605450**	Mercedes
3174233910	**1946605450**	Mercedes
3174234010	**194661**	Mercedes
3174234110	**194661**	Mercedes
3174234210	**194662**	Mercedes
3174234310	**194662**	Mercedes
3174234410	**1946605450**	Mercedes
3174234510	**1946605450**	Mercedes
3174234610	**194661**	Mercedes
3174234710	**194661**	Mercedes
3174234810	**194662**	Mercedes
3174234910	**194662**	Mercedes
3174235010	**1946605450**	Mercedes
3174235310	**1946605450**	Mercedes
3184210010	**1740945380**	Mercedes
3184210110	**174095**	Mercedes
3184210210	**174096**	Mercedes
3184210310	**1740945380**	Mercedes
3184210410	**174095**	Mercedes
3184210510	**174096**	Mercedes
3184210610	**1740945380**	Mercedes
3184210710	**1740945380**	Mercedes
3184210810	**174095**	Mercedes
3184210910	**174096**	Mercedes
3184212010	**1740945380**	Mercedes
3194210110	**152690**	Mercedes
3194210210	**152691**	Mercedes
3194210310	**152692**	Mercedes
3194210410	**152690**	Mercedes
3194210510	**152691**	Mercedes
3194210610	**152694**	Mercedes
3194210710	**152694**	Mercedes
3194210810	**152693**	Mercedes
3194230010	**170591**	Mercedes
320743	**1504414210**	Knott
320743-0633	**1504414210**	Knott
3214210010	**151230**	Mercedes
3214210110	**151232**	Mercedes
3214210210	**170592**	Mercedes
3214210310	**151230**	Mercedes
3214210410	**151231**	Mercedes

JURID by Honeywell

© JURID / All rights reserved 2005

OE	JURID	
3214210510	**151232**	Mercedes
3214210610	**150900**	Mercedes
3214210710	**150901**	Mercedes
3214210810	**150902**	Mercedes
3214230010	**170591**	Mercedes
3214230110	**170592**	Mercedes
3214230210	**170593**	Mercedes
321463	**1530405360**	Knott
3224210010	**171490**	Mercedes
3224210110	**171491**	Mercedes
3224210210	**171492**	Mercedes
3224210310	**151230**	Mercedes
3224210410	**151231**	Mercedes
3224210510	**151232**	Mercedes
3224211010	**172590**	Mercedes
3224211110	**152890**	Mercedes
3224211610	**152891**	Mercedes
3224211710	**152892**	Mercedes
3224211810	**152900**	Mercedes
3224211910	**152901**	Mercedes
3224212010	**152902**	Mercedes
3224212110	**151230**	Mercedes
3224212210	**151231**	Mercedes
3224212310	**151232**	Mercedes
3224230010	**172580**	Mercedes
3224230110	**172581**	Mercedes
3224230210	**172582**	Mercedes
3224230310	**172580**	Mercedes
3224230410	**172581**	Mercedes
3224230510	**172582**	Mercedes
3224230610	**152922**	Mercedes
3224230910	**172580**	Mercedes
32300	**1903604042**	Fruehauf
32301	**1903614040**	Fruehauf
3234210010	**152890**	Mercedes
3234210110	**152890**	Mercedes
3234210210	**152892**	Mercedes
3234210310	**152890**	Mercedes
3234210410	**152891**	Mercedes
3234210510	**152892**	Mercedes
3234230010	**150890**	Mercedes
3234230110	**150891**	Mercedes
3234230210	**150892**	Mercedes
3234230310	**150890**	Mercedes
3234230410	**152920**	Mercedes
3234230510	**152921**	Mercedes
3234230610	**152922**	Mercedes
3234230710	**152920**	Mercedes
3244210610	**1505705380**	Mercedes
3244210710	**1505715380**	Mercedes
3244210810	**1505725380**	Mercedes
3244211010	**1505705380**	Mercedes
3244211110	**1505715380**	Mercedes
3244211210	**1505725380**	Mercedes
3244211410	**1505705380**	Mercedes
3244212010	**1505725380**	Mercedes
3254211110	**1727605050**	Mercedes
325901	**1517435380**	Knott
3274230010	**171490**	Mercedes
3274230110	**171491**	Mercedes
3274230210	**171492**	Mercedes
3274230310	**172590**	Mercedes
3274230410	**172591**	Mercedes
3274230510	**172592**	Mercedes
328053	**1530425360**	Knott
3294230110	**1728505050**	Mercedes
3294230210	**1728515050**	Mercedes

OE	JURID	
3294230310	**172852**	Mercedes
32982	**1574005910**	Knott
330067	**1732415700**	DAF
330068	**1732415700**	DAF
330069	**1925615700**	DAF
330070	**1925615700**	DAF
33033110	**1521505380**	Magirus
3304230010	**1728505050**	Mercedes
33057336	**1530504210**	Perrot
33118	**1711504040**	Knott
3314210110	**172860**	Mercedes
3314210210	**172860**	Mercedes
3314210310	**172861**	Mercedes
3314210410	**172862**	Mercedes
3314210510	**172863**	Mercedes
3314210610	**172860**	Mercedes
3314210710	**172860**	Mercedes
3314210810	**172861**	Mercedes
3314210910	**172862**	Mercedes
3314211010	**172863**	Mercedes
3314230010	**191610**	Mercedes
3314230110	**191610**	Mercedes
3314230210	**191610**	Mercedes
3314230310	**191611**	Mercedes
3314230410	**191612**	Mercedes
3314230510	**191613**	Mercedes
3314230710	**191610**	Mercedes
3314230810	**191610**	Mercedes
3314230910	**191611**	Mercedes
3314231010	**191612**	Mercedes
3324200310	**1916015050**	Mercedes
3324230010	**1916005050**	Mercedes
3324230110	**1916005050**	Mercedes
3324230210	**1916005050**	Mercedes
3324230310	**1916015050**	Mercedes
3324230410	**1916025050**	Mercedes
333344	**2901104240**	Bendix
3345783	**1521505380**	Magirus
3354200220	**1727605050**	Mercedes
3354200320	**1727615050**	Mercedes
3354202920	**1727605050**	Mercedes
3354204520	**1916005050**	Mercedes
3354210010	**1727605050**	Mercedes
3354210110	**1727605050**	Mercedes
3354210210	**1727615050**	Mercedes
3354210310	**1727621820**	Mercedes
3354210410	**1727605050**	Mercedes
3354210510	**1727605050**	Mercedes
3354210610	**1727615050**	Mercedes
3354210710	**1727621820**	Mercedes
3354211110	**1727605050**	Mercedes
3354211210	**1727615050**	Mercedes
3354211310	**1727621820**	Mercedes
3354211510	**1727605050**	Mercedes
3354211610	**1727615050**	Mercedes
3354211710	**1727621820**	Mercedes
3354211910	**1727605050**	Mercedes
3354212010	**1727615050**	Mercedes
3354212110	**1727621820**	Mercedes
3354212710	**1727605050**	Mercedes
3354212810	**1727615050**	Mercedes
3354230010	**1916005050**	Mercedes
3354230110	**1916005050**	Mercedes
3354230210	**1916005050**	Mercedes
3354230310	**1916015050**	Mercedes
3354230410	**1916025050**	Mercedes
3354230510	**1916025050**	Mercedes

OE	JURID	
3354230610	**1916005050**	Mercedes
3354230710	**1916005050**	Mercedes
3354230810	**1916015050**	Mercedes
3354230910	**1916025050**	Mercedes
3354231010	**191603**	Mercedes
3354231110	**1916005050**	Mercedes
3354231210	**1916015050**	Mercedes
3354231310	**1916025050**	Mercedes
3354231510	**1916005050**	Mercedes
3354231610	**1916015050**	Mercedes
3354231710	**1916025050**	Mercedes
33750-29011	**1353915870**	A Teves
33750-29012	**1353915870**	A Teves
3384230010	**1710505380**	Mercedes
3384230110	**1710515380**	Mercedes
3384230210	**171052**	Mercedes
3384230310	**1710505380**	Mercedes
3384230410	**1710515380**	Mercedes
3392132	**1320301030**	Magirus
3392560	**1530304210**	Magirus
3392561	**1530204210**	Magirus
3394230010	**1728505050**	Mercedes
3394230110	**1728505050**	Mercedes
3394230210	**1728515050**	Mercedes
3394230310	**172852**	Mercedes
3394230410	**172853**	Mercedes
3404230010	**172590**	Mercedes
3404230110	**172591**	Mercedes
3404230210	**172592**	Mercedes
3404230910	**172590**	Mercedes
3404231010	**172591**	Mercedes
3404231110	**172592**	Mercedes
340551	**1129505360**	Knott
3414230010	**1729805380**	Mercedes
3414230110	**1729815380**	Mercedes
3414230210	**1729825380**	Mercedes
3414230310	**1729805380**	Mercedes
3414230810	**1729805380**	Mercedes
3414230910	**1729815380**	Mercedes
3414231010	**1729825380**	Mercedes
3414234110	**172989**	Mercedes
3414234210	**1729805380**	Mercedes
3414234310	**1729815380**	Mercedes
3414234410	**1729825380**	Mercedes
3414234510	**1729805380**	Mercedes
3414234710	**1729825380**	Mercedes
3414367	**1705005380**	Magirus
3414370	**1705005380**	Magirus
3414467	**1705005380**	Magirus
34201020	**2910815390**	Mercedes
34201120	**2911509100**	Mercedes
34201220	**2911509100**	Mercedes
34202020	**2910815390**	Mercedes
34202220	**2910815390**	Mercedes
34205520	**2903005390**	Mercedes
3434210010	**1728505050**	Mercedes
3434210110	**1728515050**	Mercedes
3434210210	**172852**	Mercedes
3434210310	**1728505050**	Mercedes
3434210410	**1728515050**	Mercedes
3434210510	**172852**	Mercedes
3434210610	**1728505050**	Mercedes
3434210710	**1728515050**	Mercedes
3434210810	**172852**	Mercedes
3434210910	**172852**	Mercedes
3434211010	**1728515050**	Mercedes
3434211110	**1916005050**	Mercedes

JURID / All rights reserved 2005

OE	JURID	
3434211210		Mercedes
3434211810	**1728505050**	Mercedes
3434211910	**1728515050**	Mercedes
3434212010	**172852**	Mercedes
3434212110	**1728505050**	Mercedes
3434212210	**1728515050**	Mercedes
3434212310	**172852**	Mercedes
3434230010	**1916005050**	Mercedes
3434230110	**1916015050**	Mercedes
3434230210	**1916025050**	Mercedes
3434230310	**1916005050**	Mercedes
3434230410	**1916015050**	Mercedes
3434230510	**1916025050**	Mercedes
3434230610	**1916005050**	Mercedes
3434230710	**1916015050**	Mercedes
3434230810	**1916025050**	Mercedes
3434230910	**1916025050**	Mercedes
3434231010	**1916015050**	Mercedes
3434231110	**1916005050**	Mercedes
3434231210	**1916005050**	Mercedes
3434231310	**1916015050**	Mercedes
3434231410	**1916025050**	Mercedes
3434231510	**1916005050**	Mercedes
3434231610	**1916015050**	Mercedes
3434231710	**1916025050**	Mercedes
3434237710	**171490**	Mercedes
3434786EO	**1915303270**	Magirus
3434789EO	**1915303270**	Magirus
3434793	**1915303270**	Magirus
3434794EO	**1915303270**	Magirus
3434795	**1915303270**	Magirus
34415/2	**1900425380**	Knott
34415/3	**1900435380**	Knott
344151	**1900415380**	Knott
34416/2	**1900425380**	Knott
34416/3	**1900435380**	Knott
3441605	**1900415380**	Knott
344161	**1900415380**	Knott
3454200110	**1723815050**	Mercedes
3454217910	**1723815050**	Mercedes
3454218210	**1723815050**	Mercedes
3454238110	**1949415050**	Mercedes
3454267610	**1918205380**	Mercedes
3464210010	**1723815050**	Mercedes
3464210110	**1723825050**	Mercedes
3464210210	**172383**	Mercedes
3464230010	**1949515050**	Mercedes
3464230110	**1949525050**	Mercedes
3464230210	**1949535050**	Mercedes
3464230310	**1949415050**	Mercedes
3464230410	**1949425050**	Mercedes
3464230510	**1949435050**	Mercedes
3464230610	**1949515050**	Mercedes
3464230710	**1949525050**	Mercedes
3464230810	**1949525050**	Mercedes
3464230910	**1949515050**	Mercedes
3464231010	**1949525050**	Mercedes
3464231110	**1949535050**	Mercedes
3464231210	**1949415050**	Mercedes
3464231310	**1949425050**	Mercedes
3464231410	**1949435050**	Mercedes
3464231510	**1949415050**	Mercedes
3464231610	**1949425050**	Mercedes
3464231710	**1949435050**	Mercedes
3464231910	**1723815050**	Mercedes
3464232010	**1723825050**	Mercedes
3464232110	**172383**	Mercedes

OE	JURID	
3464232210	**1723815050**	Mercedes
3464232310	**1723825050**	Mercedes
3464232410	**172383**	Mercedes
3464232510	**1723815050**	Mercedes
3464232610	**1723825050**	Mercedes
3464232710	**172383**	Mercedes
3464232810	**1949515050**	Mercedes
3464232910	**1949525050**	Mercedes
3464233010	**1949535050**	Mercedes
3464233110	**1949415050**	Mercedes
3464233210	**1949425050**	Mercedes
3464233310	**1949435050**	Mercedes
3464233410	**1949515050**	Mercedes
3464233510	**1949525050**	Mercedes
3464233610	**1949535050**	Mercedes
3464233710	**1949415050**	Mercedes
3464233810	**1949425050**	Mercedes
3464233910	**1949435050**	Mercedes
3464234010	**1949405050**	Mercedes
3464234110	**1723815050**	Mercedes
3464234210	**1723825050**	Mercedes
3464234310	**1723805050**	Mercedes
3464234510	**1949515050**	Mercedes
3464234610	**1723805050**	Mercedes
3464234710	**1949405050**	Mercedes
3464234810	**1949505050**	Mercedes
3464235310	**1949435050**	Mercedes
3464235510	**1723805050**	Mercedes
3464235610	**1949405050**	Mercedes
3464235710	**1949505050**	Mercedes
3464235810	**1949415050**	Mercedes
3464235910	**1949425050**	Mercedes
3464236010	**1949435050**	Mercedes
3464236110	**1949415050**	Mercedes
3464236210	**1949425050**	Mercedes
3464236310	**1949435050**	Mercedes
3464236410	**1723815050**	Mercedes
3464236510	**1723825050**	Mercedes
3464236610	**172383**	Mercedes
3464236710	**1723805050**	Mercedes
3464236810	**1723825050**	Mercedes
3464236910	**172383**	Mercedes
3464237010	**1949515050**	Mercedes
3464237110	**1949525050**	Mercedes
3464237210	**1949535050**	Mercedes
3464237310	**1949515050**	Mercedes
3464237410	**1949525050**	Mercedes
3464237510	**1949535050**	Mercedes
3464237610	**1949405050**	Mercedes
3464238210	**1949515050**	Mercedes
3464238310	**1949525050**	Mercedes
3464238410	**1949535050**	Mercedes
3464238510	**1949515050**	Mercedes
3464238610	**1949525050**	Mercedes
3464238710	**1949535050**	Mercedes
3464238810	**1723815050**	Mercedes
3464238910	**1723825050**	Mercedes
3464239010	**172383**	Mercedes
3464239410	**1723805050**	Mercedes
3464239510	**1723805050**	Mercedes
3464239610	**1949505050**	Mercedes
3464239710	**1949505050**	Mercedes
3464C	**1128405360**	Knott
3475292	**1515015380**	Magirus
3494210010	**1727605050**	Mercedes
3494210110	**1727615050**	Mercedes
3494210210	**1727621820**	Mercedes

OE	JURID	
3494210310	**1727605050**	Mercedes
3494210410	**1727615050**	Mercedes
3494210510	**1727621820**	Mercedes
3494210610	**1727605050**	Mercedes
3494210710	**1727615050**	Mercedes
3494210810	**1727621820**	Mercedes
3494210910	**1727615050**	Mercedes
3494211010	**1727621820**	Mercedes
3494211110	**1727621820**	Mercedes
3494211210	**1727605050**	Mercedes
3494211310	**1727615050**	Mercedes
3494211410	**172762**	Mercedes
351067	**2996905440**	KNORR
351329	**1766401820**	Volvo
351330	**1766401820**	Volvo
351431	**1956011820**	Volvo
351619	**2996905440**	Knorr
351636	**2949805440**	Knorr
351639	**2958205440**	Knorr
351668	**2974705440**	Knorr
351690	**2974705440**	Knorr
351691	**2996905440**	Knorr
351773	**2968805440**	Knorr
351774	**2978205440**	Knorr
351906	**2968805440**	Knorr
351968	**2978205440**	Knorr
3524210010	**1768215380**	Mercedes
3524210110	**1768225380**	Mercedes
3524210210	**1768235380**	Mercedes
3524210610	**1768205380**	Mercedes
3524210810	**1768215380**	Mercedes
3524210910	**1768225380**	Mercedes
3524211010	**1768235380**	Mercedes
3524230010	**1710505380**	Mercedes
3524230110	**1710515380**	Mercedes
3524230210	**171052**	Mercedes
3524230310	**1710505380**	Mercedes
3524230410	**1710515380**	Mercedes
3524230510	**171052**	Mercedes
3524230710	**171059**	Mercedes
3524230810	**1710505380**	Mercedes
3524230910	**1710515380**	Mercedes
3524231010	**171052**	Mercedes
3524231110	**1710505380**	Mercedes
3524231210	**1710515380**	Mercedes
3524231310	**1710515380**	Mercedes
352431	**1956001820**	Volvo
352432	**1956011820**	Volvo
352437	**1956211820**	Volvo
352438	**1956211820**	Volvo
3534210810	**1768215380**	Mercedes
3534210910	**1768225380**	Mercedes
3534211010	**1768235380**	Mercedes
3534230010	**1729705380**	Mercedes
3534230110	**1729715380**	Mercedes
3534230210	**172972**	Mercedes
3534230310	**1729705380**	Mercedes
3534230410	**1729715380**	Mercedes
3534230510	**172972**	Mercedes
3534230610	**1768215380**	Mercedes
3534230710	**1768225380**	Mercedes
3534230810	**1768235380**	Mercedes
3534230910	**1773915380**	Mercedes
3534231010	**1773915380**	Mercedes
3534231110	**177392**	Mercedes
3534231610	**177392**	Mercedes
3534231810	**1729705380**	Mercedes

JURID / All rights reserved 2005



OE	JURID	
3534232110	**1773905380**	Mercedes
3534232310	**1773915380**	Mercedes
3534232410	**177392**	Mercedes
3534232510	**177393**	Mercedes
3534232610	**1729705380**	Mercedes
3534232710	**1729715380**	Mercedes
3534232810	**172972**	Mercedes
3534233410	**172979**	Mercedes
3534233510	**1729705380**	Mercedes
3534233610	**1729715380**	Mercedes
3534233710	**172972**	Mercedes
3534233910	**1729705380**	Mercedes
3534234010	**1729715380**	Mercedes
3544230010	**1918205380**	Mercedes
3544230110	**1918215380**	Mercedes
3544230210	**1918225380**	Mercedes
3554230010	**191251**	Mercedes
3554230110	**191252**	Mercedes
3554230210	**191253**	Mercedes
3554230310	**191251**	Mercedes
3554230410	**191252**	Mercedes
3554230510	**191253**	Mercedes
3554230610	**1946605450**	Mercedes
3554230710	**194661**	Mercedes
3554230810	**194662**	Mercedes
3554230910	**1946605450**	Mercedes
3554231010	**194661**	Mercedes
3554231110	**194662**	Mercedes
3554231210	**191251**	Mercedes
3554231310	**191252**	Mercedes
3554231410	**191253**	Mercedes
3554231610	**1946605450**	Mercedes
3554231710	**194661**	Mercedes
3554231810	**194662**	Mercedes
3554232510	**191251**	Mercedes
3554232610	**191252**	Mercedes
3554232710	**191253**	Mercedes
3554232810	**1946605450**	Mercedes
3554232910	**194661**	Mercedes
3554233010	**194662**	Mercedes
3554233410	**1912505450**	Mercedes
35556	**1963415450**	Knott
356501	**1906305700**	DAF
356502	**1906305700**	DAF
356561	**1906305700**	DAF
356561	**1906305700**	DAF
356562	**1906305700**	DAF
356562	**1906305700**	DAF
3574211310	**1970615370**	Mercedes
3574211310	**1970615380**	Mercedes
3574211310	**1970615450**	Mercedes
3574211410	**1970625370**	Mercedes
3574211410	**1970625450**	Mercedes
3574211510	**1970625450**	Mercedes
3574212410	**1727815380**	Mercedes
3574230011	**1970725450**	Mercedes
3574230111	**1970705450**	Mercedes
3574230111	**1970715370**	Mercedes
3574230111	**1970715450**	Mercedes
3574230211	**1970705450**	Mercedes
3574230211	**1970725370**	Mercedes
3574230211	**1970725450**	Mercedes
3574230311	**1970735450**	Mercedes
3574230411	**1970605370**	Mercedes
3574230411	**1970605380**	Mercedes
3574230411	**1970605450**	Mercedes
3574230411		Mercedes



OE	JURID	
3574230511	**197065450**	Mercedes
3574230511	**1970615370**	Mercedes
3574230611	**1970635450**	Mercedes
3574230710	**1970605450**	Mercedes
3574230711	**1970615450**	Mercedes
3574230810	**1970625450**	Mercedes
3574230811	**1970625450**	Mercedes
3574230910	**1970625450**	Mercedes
3574230911	**1970635450**	Mercedes
3574231010	**1970615450**	Mercedes
3574231011	**1970715370**	Mercedes
3574231011	**1970715450**	Mercedes
3574231011	**1970715450**	Mercedes
3574231110	**1970625450**	Mercedes
3574231111	**1970725370**	Mercedes
3574231111	**1970725450**	Mercedes
3574231111	**1970725450**	Mercedes
3574231210	**1970725450**	Mercedes
3574231211	**1970735450**	Mercedes
3574231211	**1970735450**	Mercedes
3574231310	**1970705450**	Mercedes
3574231410	**1970715450**	Mercedes
3574231510	**1970725450**	Mercedes
3574231610	**1970705450**	Mercedes
3574231710	**1970715450**	Mercedes
3574231810	**1970725450**	Mercedes
3574233510	**1970715370**	Mercedes
3574233510	**1970715450**	Mercedes
3574233510	**1970715450**	Mercedes
3574233610	**1970715370**	Mercedes
3574233610	**1970715450**	Mercedes
3574233710	**1970725450**	Mercedes
3574235810	**1970605450**	Mercedes
3574235910	**1970615450**	Mercedes
3574236010	**1970625450**	Mercedes
3574236110	**1970605450**	Mercedes
3574236210	**1970615450**	Mercedes
3574236310	**1970625450**	Mercedes
3574237010	**1970705450**	Mercedes
3574237110	**1970715450**	Mercedes
3574237210	**1970725450**	Mercedes
3574237310	**1970705450**	Mercedes
3574237410	**1970715450**	Mercedes
3574237510	**1970725450**	Mercedes
3574238310	**1970605450**	Mercedes
3574238410	**1970615450**	Mercedes
3574238510	**1970625450**	Mercedes
3574238610	**1970605450**	Mercedes
3574238710	**1970615450**	Mercedes
3574238810	**1970625450**	Mercedes
3574239510	**1970705450**	Mercedes
3574239610	**1970715450**	Mercedes
3574239710	**1970725450**	Mercedes
3574239810	**1970705450**	Mercedes
3574239910	**1970715450**	Mercedes
3604210310	**176370**	Mercedes
3604210610	**1710505380**	Mercedes
3604210710	**1710515380**	Mercedes
3604210810	**171052**	Mercedes
3604210910	**1723815050**	Mercedes
3604211010	**1723825050**	Mercedes
3604211110	**172383**	Mercedes
3604211210	**1723815050**	Mercedes
3604211310	**1723825050**	Mercedes
3604211410	**172383**	Mercedes
3604211610	**1723805050**	Mercedes
3604211810	**1723815050**	Mercedes



OE	JURID	
3604211910	**1723825050**	Mercedes
3604212010	**172383**	Mercedes
3604212410	**1710505380**	Mercedes
3604212510	**1710515380**	Mercedes
3604212610	**171052**	Mercedes
3604230010	**1918205380**	Mercedes
3604230110	**1918215380**	Mercedes
3604230210	**1918225380**	Mercedes
3604230310	**1949405050**	Mercedes
3604230410	**1949415050**	Mercedes
3604230510	**1949425050**	Mercedes
3604230610	**1949435050**	Mercedes
3604230710	**1949415050**	Mercedes
3604230810	**1949425050**	Mercedes
3604230910	**1949435050**	Mercedes
3604231010	**1723815050**	Mercedes
3604231110	**1723825050**	Mercedes
3604231210	**172383**	Mercedes
3604231310	**1918205380**	Mercedes
3604231410	**1918215380**	Mercedes
3604231510	**1918225380**	Mercedes
3604231610	**1949405050**	Mercedes
3604231910	**1949415050**	Mercedes
3604232010	**1949425050**	Mercedes
3604232110	**1949435050**	Mercedes
3604232210	**1949405050**	Mercedes
3604232310	**1723805050**	Mercedes
3604232410	**1768205380**	Mercedes
3604232510	**1773905380**	Mercedes
3604232610	**1918205380**	Mercedes
3604232710	**1918215380**	Mercedes
3604232810	**1918225380**	Mercedes
3604232910	**1918225380**	Mercedes
3604233010	**1918205380**	Mercedes
3604233110	**1918215380**	Mercedes
3604233210	**191829**	Mercedes
3604233310	**1918205380**	Mercedes
3604233410	**1918215380**	Mercedes
3604233510	**1918225380**	Mercedes
3604233910	**1918205380**	Mercedes
3604234010	**1918215380**	Mercedes
3604234110	**1918225380**	Mercedes
3700049	**1782905380**	RVI
3700049	**1782905380**	RVI
3700052	**1730703320**	RVI
3700052	**1730703320**	RVI
3700053	**1904903270**	RVI
3700059	**1528203320**	RVI
3700059	**1528203320**	RVI
3700073	**1904903270**	RVI
3700349	**1782915380**	RVI
3700349	**1782915380**	RVI
3700353	**1904913270**	RVI
3700353	**1904913270**	RVI
3700373	**1904913270**	RVI
3700373	**1904913270**	RVI
3704210010	**1912505450**	Mercedes
3704210110	**191251**	Mercedes
3704210210	**191252**	Mercedes
3704210310	**1912505450**	Mercedes
3704210410	**191251**	Mercedes
3704210510	**191252**	Mercedes
3704210610	**1912505450**	Mercedes
3704210710	**191251**	Mercedes
3704210810	**191252**	Mercedes
3704212610	**191251**	Mercedes
3704212710	**191252**	Mercedes

JURID / All rights reserved 2005

OE	JURID	
3714214010	**196000**	Mercedes
3764211210		Mercedes
3764217010	**1710505380**	Mercedes
3764217310	**1710505380**	Mercedes
376604	**1726305700**	DAF
376605	**1726305700**	DAF
3814230010	**1768215380**	Mercedes
3814230110	**1768225380**	Mercedes
3814230210	**1768235380**	Mercedes
3814230310	**1768205380**	Mercedes
3814230410	**1768215380**	Mercedes
3814230510	**1768225380**	Mercedes
3814230610	**1768235380**	Mercedes
3814230710	**1768205380**	Mercedes
3814230810	**1791505380**	Mercedes
3814230910	**1791515380**	Mercedes
3814231010	**179152**	Mercedes
3814231110	**179159**	Mercedes
3814231210	**1791505380**	Mercedes
3814231310	**1791505380**	Mercedes
3814231410	**1791505380**	Mercedes
3814231510	**197159**	Mercedes
3814231610	**1791505380**	Mercedes
3814231710	**1791515380**	Mercedes
3814231810	**179152**	Mercedes
3814231910	**1723815050**	Mercedes
3814232010	**1723825050**	Mercedes
3814232110	**172383**	Mercedes
3814232210	**1949415050**	Mercedes
3814232310	**1949425050**	Mercedes
3814232410	**1949435050**	Mercedes
3814232610	**1723805050**	Mercedes
3814232710	**1949405050**	Mercedes
382163	**172611**	DAF
382164	**172621**	DAF
382167	**1732415700**	DAF
382168	**1732415700**	DAF
382171	**1726315700**	DAF
382172	**1726315700**	DAF
382175	**1915015700**	DAF
382176	**1915015700**	DAF
382179	**1925615700**	DAF
382180	**1925615700**	DAF
3834210010	**1773915380**	Mercedes
3834210110	**177392**	Mercedes
3834210210	**177393**	Mercedes
3834210310	**1773915380**	Mercedes
3834210410	**177392**	Mercedes
3834210510	**177393**	Mercedes
3834210610	**1768215380**	Mercedes
3834210710	**1768225380**	Mercedes
3834210810	**1768235380**	Mercedes
3834210910	**1768215380**	Mercedes
3834211010	**1768225380**	Mercedes
3834211110	**1768235380**	Mercedes
3834211210	**1773905380**	Mercedes
3834211310	**1773905380**	Mercedes
3834211410	**1768205380**	Mercedes
3834211510	**1768205380**	Mercedes
3834211610	**1773915380**	Mercedes
3834211710	**177392**	Mercedes
3834211810	**177393**	Mercedes
3834211910	**1768215380**	Mercedes
3834212010	**1768225380**	Mercedes
3834212110	**1768235380**	Mercedes
3834212310	**1768225380**	Mercedes
3834212410	**1768215380**	Mercedes

OE	JURID	
3834212510	**1768205380**	Mercedes
3834212610	**1768205380**	Mercedes
3834212710	**1768235380**	Mercedes
3834231210	**1773905380**	Mercedes
3834231310	**1773905380**	Mercedes
3854210010	**1949415050**	Mercedes
3854210110	**1949425050**	Mercedes
3854210210	**1949435050**	Mercedes
3854210310	**1949415050**	Mercedes
3854210410	**1949425050**	Mercedes
3854210510	**1949435050**	Mercedes
3854210610	**1949405050**	Mercedes
3854210710	**1949405050**	Mercedes
3854210810	**1949425050**	Mercedes
3854210910	**1949435050**	Mercedes
3854211010	**1949415050**	Mercedes
3854211210	**1949405050**	Mercedes
3854230110	**1723815050**	Mercedes
3854230210	**1723825050**	Mercedes
3854230310	**172383**	Mercedes
3854230410	**1723815050**	Mercedes
3854230510	**1723825050**	Mercedes
3854230610	**172383**	Mercedes
3854230710	**1723805050**	Mercedes
3854230810	**1723805050**	Mercedes
3854230910	**1723815050**	Mercedes
3854231010	**1723825050**	Mercedes
3854231110	**172383**	Mercedes
3854231210	**1723805050**	Mercedes
385948	**1993101820**	Scania
385949	**1993201820**	Scania
385950	**1993305450**	Scania
3874230710	**1949405050**	Mercedes
3874230810	**1949405050**	Mercedes
387664	**179900**	Scania
387665	**199250**	Scania
387666	**199260**	Scania
387667	**1992709530**	Scania
390440725	**1504404210**	Steyr
391952	**1991415700**	DAF
391953	**1989015700**	DAF
391954	**1989015700**	DAF
391955	**1990015700**	DAF
391956	**1990015700**	DAF
395073	**1915015700**	DAF
395320	**1520709580**	Iveco
397051	**1799101820**	Scania
397052	**1993101820**	Scania
397053	**1993201820**	Scania
397054	**1993305450**	Scania
398841	**2974705440**	DAF
3G350770003	**2949805440**	Knorr
3G351110104	**2968805440**	Knorr
3G35156/0004	**2974705440**	Knorr
3GSK35433	**2958205440**	Knorr
3GSK35723	**2978205440**	Knorr
4023399	**1520709580**	Iveco
4044210010	**151172**	Mercedes
4044210110	**151173**	Mercedes
4044210310	**151170**	Mercedes
4044210410	**151171**	Mercedes
4044210510	**151172**	Mercedes
4044210610	**151173**	Mercedes
4044210910	**151171**	Mercedes
4044211010	**151173**	Mercedes
4044211110	**151170**	Mercedes
4064210110	**1530003320**	Mercedes

OE	JURID	
4064210210	**1530003320**	Mercedes
4064210310	**1530013320**	Mercedes
4064210410	**1530003320**	Mercedes
4064210510	**1530003320**	Mercedes
4064210610	**1530013320**	Mercedes
4074210010	**157480**	Mercedes
4074210110	**157480**	Mercedes
4074210210	**152950**	Mercedes
4074210310	**192951**	Mercedes
4074210510	**152950**	Mercedes
4114210010	**131300**	Mercedes
4114210210	**131301**	Mercedes
4114210310	**131302**	Mercedes
4114210410	**131302**	Mercedes
4114210510	**131300**	Mercedes
4164210010	**1530003320**	Mercedes
4164210110	**1530013320**	Mercedes
4164210210	**1530003320**	Mercedes
4164210310	**1530013320**	Mercedes
4164210410	**1530003320**	Mercedes
4164210510	**1530003320**	Mercedes
4164210610	**1530003320**	Mercedes
4164210710	**1530003320**	Mercedes
4164210810	**1530003320**	Mercedes
4164210910	**1530013320**	Mercedes
4164211110	**153009**	Mercedes
4164211210	**153009**	Mercedes
4164211410	**1530003320**	Mercedes
4164211510	**1530013320**	Mercedes
4164211610	**1530003320**	Mercedes
4164212110	**1530003320**	Mercedes
4164212210	**1530013320**	Mercedes
4164212310	**153009**	Mercedes
4164212410	**153009**	Mercedes
4164212510	**1530003320**	Mercedes
4164212610	**1530013320**	Mercedes
4200720	**1101905460**	Mercedes
4200820	**1101905460**	Mercedes
4200920	**1101905460**	Mercedes
42014966UC50551	**1962213320**	Magirus
42014966UC505518	**1962213320**	Magirus
42014967	**1962213320**	Iveco
42014967EZ505518	**1962213320**	Magirus
42014968EZ505518	**1962213320**	Magirus
42014970UC505512	**1780411820**	Magirus
42014971EZ505512	**1780411820**	Magirus
42014972EZ505512	**1780411820**	Magirus
42014978EZ505512	**1782905380**	Magirus
42014979EZ505512	**1782915380**	Magirus
42014981EZ505512	**1782905380**	Magirus
42014982EZ505512	**1782915380**	Magirus
42014984EZ505518	**1783105380**	Magirus
42014985EZ505518	**1783115380**	Magirus
42014987EZ505518	**1783115380**	Magirus
42014988EZ505518	**1783115380**	Magirus
42014990EZ505512	**1782705380**	Magirus
42014991EZ505512	**1782715380**	Magirus
42014994EZ505512	**1782705380**	Magirus
42014995EZ505512	**1782715380**	Magirus
42014998EZ505518	**1962015380**	Magirus
42014999EZ505518	**1962015380**	Magirus
4201620	**1101905460**	Mercedes
4201720	**1101905460**	Mercedes
4201820	**1101905460**	Mercedes
42026002EZ505518	**1962015380**	Magirus
42026003EZ505518	**1962015380**	Magirus
4203820	**1101905460**	Mercedes

JURID / All rights reserved 2005



OE	JURID	
4203920	**1101905460**	Mercedes
42061502EZ505518	**1938405380**	Magirus
42061503EZ505518	**1938415380**	Magirus
42061504EZ505518	**1938425380**	Magirus
4209720	**571950J**	Mercedes
4209720	**571950J-AS**	Mercedes
4214210010	**152950**	Mercedes
4214210110	**152951**	Mercedes
4214210410	**157480**	Mercedes
4214210510	**152950**	Mercedes
4214210610	**152951**	Mercedes
4214210710	**157480**	Mercedes
4214216510	**152950**	Mercedes
42470835	**2912114530**	Iveco
42480265	**1782905380**	Magirus
42480265EY505512	**1782905380**	Magirus
42480266EY505512	**1782915380**	Magirus
42480267	**1782905380**	Magirus
42480267EY505512	**1782905380**	Magirus
42480268EY505512	**1782915380**	Magirus
42480269	**1783105380**	Magirus
42480269EY505518	**1783105380**	Magirus
42480270EY505518	**1783115380**	Magirus
42480271	**1783115380**	Magirus
42480271EY505518	**1783105380**	Magirus
42480272EY505518	**1783115380**	Magirus
42481444	**1740805380**	Magirus
42481445	**1740805380**	Magirus
42481446	**1740815380**	Magirus
42482949EY505512	**1763503320**	Magirus
42499976	**1573205380**	Iveco
425074	**571272J**	Peugeot
4307370E	**1530304210**	Magirus
4424230010	**178200**	Mercedes
4424230110	**178200**	Mercedes
4424230210	**178200**	Mercedes
4424230310	**178210**	Mercedes
4424230710	**178202**	Mercedes
4424231110	**178212**	Mercedes
4424234610	**178200**	Mercedes
4424234710	**178200**	Mercedes
4424234810	**178200**	Mercedes
4424234910	**178200**	Mercedes
4424235010		Mercedes
4424235110	**178200**	Mercedes
4464210410	**1530003320**	Mercedes
4522998	**1555803320**	Iveco
4597634	**1555803320**	Iveco
4602310	**1555803320**	Iveco
4604200020	**571272J**	Mercedes
4610034	**1549409530**	Iveco
4611616	**1549409530**	Iveco
4611622	**1748213320**	Iveco
4622998	**1555803320**	Iveco
4623000	**1555813320**	Iveco
4634230010	**1302005460**	Mercedes
4634230110	**1302015460**	Mercedes
4634230210	**1503005460**	Mercedes
4634230310	**1503015460**	Mercedes
4656489	**1748203320**	Iveco
4664592	**1549409530**	Iveco
4664593	**1533603320**	Iveco
4683638	**1549409530**	Iveco
4683746	**1748203320**	Iveco
4691224	**1786909530**	Iveco
4693070	**1786909530**	Iveco
4693321	**1969413320**	Iveco



OE	JURID	
4693343	**1786909530**	Iveco
4694338	**1788513320**	Iveco
4694875	**1788513320**	Iveco
4707409	**1786909530**	Iveco
4715314	**1573215380**	Iveco
4715315	**1573215380**	Iveco
4884210010	**1723815050**	Mercedes
4884210110	**1723825050**	Mercedes
4884210210	**172383**	Mercedes
4974210010	**1723815050**	Mercedes
4974210110	**1723825050**	Mercedes
4974210210	**172383**	Mercedes
5000241462	**1525303320**	RVI
5000242747	**1949415380**	RVI
5000242747/8	**1949415380**	RVI
5000242748	**1949415380**	RVI
5000242749	**1949515380**	RVI
5000242749/50	**1949515380**	RVI
5000242750	**1949515380**	RVI
5000242867	**1949415380**	RVI
5000242867/8	**1949415380**	RVI
5000242868	**1949415380**	RVI
5000243047	**1749705380**	RVI
5000243220	**1780411820**	RVI
5000243792	**1962213320**	RVI
5000288502	**1569803320**	RVI
5000288503	**1346403320**	RVI
5000288504	**1510403320**	RVI
5000288505	**1510413320**	RVI
5000288508	**1993503270**	RVI
5000288509	**1993513270**	RVI
5000288510	**1965703270**	RVI
5000288511	**1965713270**	RVI
5000288512	**1993403270**	RVI
5000288513	**1993413270**	RVI
5000288514	**1904903270**	RVI
5000288515	**1904913270**	RVI
5000288518	**1782905380**	RVI
5000288519	**1782915380**	RVI
5000288522	**1783105380**	RVI
5000288523	**1783115380**	RVI
5000288524	**1925503270**	RVI
5000288525	**1925513270**	RVI
5000294062	**1758203320**	RVI
5000295945	**1962015380**	RVI
5000295947	**1782715380**	RVI
5000296222	**1993429530**	RVI
5000297198	**2904303381**	RVI
5000297808	**2901303371**	RVI
5000525640	**2904303381**	RVI
5000559091	**1782705380**	RVI
5000559160	**1962015380**	RVI
5000559441	**1904903270**	RVI
5000560580	**1569803320**	RVI
5000560582	**1346403320**	RVI
5000560583	**1510403320**	RVI
5000560648	**1346413320**	RVI
5000560649	**1510413320**	RVI
5000560650	**1569813320**	RVI
5000560943	**1782705380**	RVI
5000560946	**1780401820**	RVI
5000560947	**1962213320**	RVI
5000793121	**1965703270**	RVI
5000793132	**1965713270**	RVI
5000809635	**1730613270**	RVI
5000809868	**1991903270**	RVI
5000811113	**1993503270**	RVI



OE	JURID	
5000811875	**1758203320**	RVI
5000811877	**1904903270**	RVI
5000811878	**1965503270**	RVI
5000811879	**1758213320**	RVI
5000811881	**1904913270**	RVI
5000812335	**1993403270**	RVI
5000813673	**2901303371**	RVI
5000814168	**1993429530**	RVI
5000814345	**2904403331**	RVI
5000814490	**1904903270**	RVI
5000814835	**1903604040**	RVI
5000814836	**1903204040**	RVI
5000814837	**1909404040**	RVI
5000814844	**1903614040**	RVI
5000814845	**1903214040**	RVI
5000814846	**1909414040**	RVI
5000814847	**1936514040**	RVI
5000814855	**1904913270**	RVI
5000814856	**1904913270**	RVI
5000814858	**1965703270**	RVI
5000815053	**1782905380**	RVI
5000815054	**1782915380**	RVI
5000815058	**1758213320**	RVI
5000816058	**1904903270**	RVI
5000819682	**1741015380**	RVI
5000819683	**1949405380**	RVI
5000819684	**1949415380**	RVI
5000819685	**1949425380**	RVI
5000819690	**1949505380**	RVI
5000819691	**1949515380**	RVI
5000820575	**1965503270**	RVI
5000821730	**1904913270**	RVI
5000821731	**1904903270**	RVI
5000821732	**1965703270**	RVI
5000821815	**1993403270**	RVI
5000821816	**1993413270**	RVI
5000821817	**1993503270**	RVI
5000821818	**1993513270**	RVI
5000822061	**1993403270**	RVI
5000822062	**1993413270**	RVI
5000822063	**1993503270**	RVI
5000822064	**1993513270**	RVI
5000822065	**1730603270**	RVI
5000822593	**1782905380**	RVI
5000822594	**1782915380**	RVI
5000822595	**1783105380**	RVI
5000822596	**1783115380**	RVI
5000822597	**1782705380**	RVI
5000822598	**1782715380**	RVI
5000822599	**1962005380**	RVI
5000822605	**1962015380**	RVI
5000823920	**1903604040**	RVI
5000823921	**1903204040**	RVI
5000823922	**1909404040**	RVI
5000823923	**1936504040**	RVI
5000823924	**1903214040**	RVI
5000823925	**1903614040**	RVI
5000823926	**1909414040**	RVI
5000823927	**1936514040**	RVI
5000823929	**1909404040**	RVI
5000824297	**1965703270**	RVI
5000824298	**1965713270**	RVI
5000825627	**1925503270**	RVI
5000825629	**1925513270**	RVI
5001014694	**2906503341**	RVI
5001014704	**2906703341**	RVI
5001621995	**2901303371**	RVI

JURID / All rights reserved 2005

OE	JURID	
5001821817	**1993503270**	RVI
5001821995	**2901303371**	RVI
5001823000	**2903005391**	RVI
5001823001		RVI
5001823215	**1783105380**	RVI
5001823216	**1783115380**	RVI
5001823240	**1918703270**	RVI
5001823241	**1918713270**	RVI
5001823557	**2904403331**	RVI
5001823928	**1783115380**	RVI
5001825100	**1993503280**	RVI
5001825101	**1993513280**	RVI
5001825257	**1993403270**	RVI
5001825258	**1993413270**	RVI
5001825533	**1730603270**	RVI
5001825534	**1730613270**	RVI
5001825608	**1904903280**	RVI
5001825609	**1904913280**	RVI
5001825610	**1965703270**	RVI
5001825611	**1965713270**	RVI
5001825618	**1965703270**	RVI
5001825619	**1965713270**	RVI
5001825620	**1904903270**	RVI
5001825621	**1904913270**	RVI
5001826722	**1960403290**	RVI
5001826731	**1903604040**	RVI
5001826732	**1903614040**	RVI
5001826740	**1936904040**	RVI
5001826741	**1936914040**	RVI
5001829359	**1903204040**	RVI
5001829360	**1909404040**	RVI
5001829545	**2901303371**	RVI
5001829557	**1993503270**	RVI
5001829558	**1993513270**	RVI
5001829744	**1909414040**	RVI
5001829745	**1903214040**	RVI
5001831161	**2909005391**	RVI
5001831231	**1962203320**	RVI
5001833104	**2910009560**	RVI
5001833114	**2909005391**	RVI
5001834065		RVI
5001834075	**2903005392**	RVI
5001836607		RVI
5001836920	**1991903270**	RVI
5001836921	**1991913270**	RVI
5001836965	**1993429530**	RVI
5001837201	**1918703270**	RVI
5001837202	**1918713270**	RVI
5001838285		RVI
5001842048	**2998404611**	RVI
5001844748	**29160**	RVI
5001844757	**2912104530**	RVI
5001846034	**2909005390**	RVI
5001848363	**2903005392**	RVI
5001850859	**2912104530**	RVI
5001854342	**2903005390**	RVI
5001855646	**2913109560**	RVI
5001855902	**2914209560**	RVI
5001857615	**2910009560**	RVI
5001858684	**2915905399**	RVI
5001863324	**2915905399**	RVI
500821964	**2904303381**	RVI
5010151214	**2907203341**	RVI
5010848607	**2908809560**	RVI
501208804	**2903004230**	ZF
501208804	**2903005390**	ZF
501208995	**2905305390**	ZF

OE	JURID	
501208996	**2903005390**	ZF
501298195	**2907705390**	Neoplan
501300416	**1128504210**	Magirus
501313077	**1900405380**	ZF
501313077	**1900405380**	ZF
501313077	**1900405450**	ZF
501313077	**1900405450**	ZF
501313077	**1974305380**	ZF
501313077	**1974305380**	ZF
501313077	**1974305450**	ZF
501313077	**1974305450**	ZF
501908	**1732405700**	DAF
501909	**1732405700**	DAF
501910	**1925605700**	DAF
501911	**1925605700**	DAF
503221	**172610**	DAF
503222	**172620**	DAF
503223	**1726305700**	DAF
503224	**1726305700**	DAF
503225	**1915005700**	DAF
503226	**1915005700**	DAF
503822	**1903604040**	DAF
503910	**1925605700**	DAF
503911	**1925605700**	DAF
505360	**1915005700**	DAF
505361	**1915005700**	DAF
505362	**1961705700**	DAF
505363	**1961705700**	DAF
508902	**1732415700**	DAF
508903	**1732415700**	DAF
50907	**320279J**	SAMCO
509933	**172010**	DAF
509934	**173850**	DAF
509936	**172610**	DAF
509937	**172620**	DAF
509938	**1732405700**	DAF
509939	**1732405700**	DAF
509940	**1726305700**	DAF
509941	**1726305700**	DAF
509942	**1915005700**	DAF
509943	**1915005700**	DAF
509944	**1925605700**	DAF
509945	**1925605700**	DAF
5107120331	**1515015380**	Magirus
511680	**1726305700**	DAF
511681	**1726305700**	DAF
511682	**1925605700**	DAF
511683	**1925605700**	DAF
514281	**1915015700**	DAF
514282	**1915015700**	DAF
514283	**1915015700**	DAF
514284	**1915015700**	DAF
514285	**1925615700**	DAF
514286	**1925615700**	DAF
514287	**1925615700**	DAF
514288	**1925615700**	DAF
51451801167	**1709205380**	Magirus
5145180601	**1705005380**	Magirus
5145180621	**1705005380**	Magirus
515287	**1925615700**	DAF
515288	**1925615700**	DAF
51771803111	**1915303270**	Magirus
51771803121	**1915303270**	Magirus
5177180362	**1915303270**	Magirus
5177180372	**1915303270**	Magirus
526023050000	**1924505450**	Steyr
526023050010	**1978205370**	Steyr

OE	JURID	
526033032000	**1924605450**	Steyr
5317002300	**2910815390**	SAF / Sauer
5317002400	**2909315390**	SAF / Sauer
535105W	**1320301030**	Magirus
535285Z	**1530605460**	Magirus
538966	**1726315700**	DAF
538967	**1726315700**	DAF
541604	**2903903342**	VALEO
541616R	**2906709560**	VALEO
541617R	**2901104240**	VALEO
541642	**2903005392**	VALEO
541645	**2904215390**	VALEO
541645	**2910815390**	VALEO
541648	**2904303381**	VALEO
541650	**2903004230**	VALEO
5416570	**2906709560**	VALEO
5416580	**2901104240**	VALEO
541668	**2903005392**	VALEO
544037	**172610**	DAF
544038	**172620**	DAF
544039	**1726305700**	DAF
544040	**1726305700**	DAF
544041	**1915005700**	DAF
544042	**1915005700**	DAF
546027	**1925605700**	DAF
546028	**1925605700**	DAF
546201	**1732405700**	DAF
546202	**1732405700**	DAF
546823	**1903614040**	DAF
548572	**1911709550**	DAF
548573	**1911709550**	DAF
551009	**1907501820**	Scania
551010	**1716101820**	Scania
551010	**1716101820**	Volvo
551019	**171612**	Scania
551021	**1907529530**	Scania
551029	**1939301820**	Scania
551029	**1939301230**	Scania
551039	**1939301820**	Scania
551039	**1939301230**	Scania
551046	**1964709530**	Scania
551047	**1964729530**	Scania
551048	**1964709530**	Scania
551049	**1964729530**	Scania
551053	**1939301820**	Scania
551053	**1939301230**	Scania
551057	**1716101820**	Scania
551058	**1907501820**	Scania
551059	**1939301820**	Scania
551059	**1939301230**	Scania
551060	**1939329530**	Scania
551061	**171612**	Scania
551062	**1907529530**	Scania
551063	**1939329530**	Scania
551092	**179900**	Scania
551094	**199250**	Scania
551096	**1992709530**	Scania
551097	**199260**	Scania
551100	**179900**	Scania
551101	**199250**	Scania
551102	**199260**	Scania
551103	**1992709530**	Scania
551104	**179902**	Scania
551105	**199252**	Scania
551106	**199262**	Scania
551107	**199272**	Scania
551117	**1907529530**	Scania

JURID by Honeywell

© JURID / All rights reserved 2005

OE	JURID	
551122	**1799101820**	Scania
551123	**1993101820**	Scania
551124	**1993201820**	Scania
551125	**1964709530**	Scania
551125	**1993305450**	Scania
551126	**171612**	Scania
551126	**1799121820**	Scania
551127	**1907529530**	Scania
551127	**1993129530**	Scania
551128	**1939329530**	Scania
551128	**1993221820**	Scania
551129	**1964729530**	Scania
551129	**1993305450**	Scania
551130	**1907501820**	Scania
551130	**1907501820**	Scania
551131	**1939301820**	Scania
551131	**1939301230**	Scania
551131	**1939329530**	Scania
551132	**1964709530**	Scania
551132	**1964719530**	Scania
551133	**1907501820**	Scania
551134	**1939329530**	Scania
551134	**1939329530**	Scania
551135	**1964729530**	Scania
551136	**1799101820**	Scania
551137	**1993101820**	Scania
551138	**1993201820**	Scania
551160	**1799101820**	Scania
551161	**1993101820**	Scania
551162	**1993201820**	Scania
551163	**1993305450**	Scania
551164	**1799111820**	Scania
551164	**1799121820**	Scania
551165	**1993111820**	Scania
551165	**1993111820**	Scania
551166	**1993211820**	Scania
551166	**1993221820**	Scania
551167	**1993315450**	Scania
551168	**1716101820**	Scania
551168	**1716101820**	Scania
551169	**1907501820**	Scania
551170	**1939301820**	Scania
551170	**1939301230**	Scania
551171	**1964709530**	Scania
551172	**1716111820**	Scania
551172	**1716111820**	Scania
551173	**1907511820**	Scania
551174	**1939311820**	Scania
551174	**1939329530**	Scania
551175	**1964719530**	Scania
551175	**1964719530**	Scania
551179	**1993101820**	Scania
551180	**1993305450**	Scania
551183	**1907501820**	Scania
551184	**1964709530**	Scania
551192	**1993201820**	Scania
551193	**1993201820**	Scania
582903220	**1314105910**	Mercedes
582903221	**1314115910**	Mercedes
582903222	**1314115910**	Mercedes
584574	**172930**	DAF
584575	**172450**	DAF
584576	**172020**	DAF
584577	**172010**	DAF
59000340006	**1740805380**	Steyr
59000340044	**1763523320**	Steyr
59000340045	**1763503320**	Steyr

OE	JURID	
59000340047	**1763523320**	Steyr
59000340714	**1763503320**	Steyr
59000340715	**1763503320**	Steyr
59000340747	**1763513320**	Steyr
59000440007	**1740815380**	Steyr
59000440008	**1740805380**	Steyr
59000440707	**1740805380**	Steyr
6014200020	**1101905460**	Mercedes
6014207620	**571272J**	Mercedes
6014208720	**571272J**	Mercedes
6014210208	**571272J**	Mercedes
6014210408	**571272J**	Mercedes
6014210608	**571272J**	Mercedes
6014230010	**1101915460**	Mercedes
6014230310	**1101915460**	Mercedes
6014230610	**1101915460**	Mercedes
6014230710	**1101925460**	Mercedes
6014230810	**1101935460**	Mercedes
6014230910	**1101915460**	Mercedes
6014231010	**1101925460**	Mercedes
6014231110	**1101935460**	Mercedes
6014231210	**1101905460**	Mercedes
6014231310	**1101905460**	Mercedes
6014231710	**1101905460**	Mercedes
6014231810	**1101905460**	Mercedes
6014231910	**1101915460**	Mercedes
6014232010	**1101935460**	Mercedes
6014232610	**1101905460**	Mercedes
6014232710	**1101915460**	Mercedes
6014232810	**1101925460**	Mercedes
6014232910	**1101935460**	Mercedes
6014233010	**1101905460**	Mercedes
6014233110	**1101915460**	Mercedes
6014233210	**1101935460**	Mercedes
6014233310	**1101935460**	Mercedes
6014234410	**1101905460**	Mercedes
6014234510	**1101915460**	Mercedes
6014234610	**1101925460**	Mercedes
6014234710	**1101935460**	Mercedes
6014235210	**1101905460**	Mercedes
6014235310	**1101905460**	Mercedes
6014235410	**1101915460**	Mercedes
6014235510	**1101915460**	Mercedes
6014235610	**1101925460**	Mercedes
6014235710	**1101925460**	Mercedes
6014235810	**1101935460**	Mercedes
6014235910	**1101935460**	Mercedes
6014236010	**1101905460**	Mercedes
6014236110	**1101905460**	Mercedes
6014236410	**1101915460**	Mercedes
6014236510	**1101915460**	Mercedes
6014236610	**1101925460**	Mercedes
6014236710	**1101925460**	Mercedes
6014236810	**1101905460**	Mercedes
6014236910	**1101905460**	Mercedes
6014237010	**1101915460**	Mercedes
6014237110	**1101915460**	Mercedes
6014237210	**1101925460**	Mercedes
6014237310	**1101925460**	Mercedes
6014237410	**1101935460**	Mercedes
6014237510	**1101935460**	Mercedes
6014237710	**1101905460**	Mercedes
6014237810	**1101915460**	Mercedes
6015860042	**571272J**	Mercedes
6024230610	**1302015460**	Mercedes
6024230710	**1302025460**	Mercedes
6024230810	**1302035460**	Mercedes

OE	JURID	
6024230910	**1302015460**	Mercedes
6024231010	**1302025460**	Mercedes
6024231110	**1302035460**	Mercedes
6024231210	**1302005460**	Mercedes
6024231310	**1302005460**	Mercedes
6024231710		Mercedes
6024231810	**1302005460**	Mercedes
6024231910	**1302015460**	Mercedes
6024232010	**1302025460**	Mercedes
6024232011	**1302035460**	Mercedes
6024232610	**1302005460**	Mercedes
6024232710	**1302015460**	Mercedes
6024232810	**1302025460**	Mercedes
6024232910	**1302035460**	Mercedes
6024233010	**1302005460**	Mercedes
6024233110	**1302015460**	Mercedes
6024233210	**1302025460**	Mercedes
6024233310	**1302035460**	Mercedes
6024233510	**1302005460**	Mercedes
6024233610	**1302015460**	Mercedes
6024233710	**1302025460**	Mercedes
6024233810	**1302035460**	Mercedes
6024233910	**1302005460**	Mercedes
6024234010	**1302015460**	Mercedes
6024234110	**1302025460**	Mercedes
6024234210	**1302035460**	Mercedes
6024234310		Mercedes
6024234410	**1302005460**	Mercedes
6024234510	**1302015460**	Mercedes
6024234610	**1302025460**	Mercedes
6024234710	**1302035460**	Mercedes
6024234810	**1302015460**	Mercedes
6024234910	**1302015460**	Mercedes
6024236010	**1302005460**	Mercedes
6024236110	**1302015460**	Mercedes
6024236210	**1302025460**	Mercedes
6024236310	**1302035460**	Mercedes
6024236410	**1302005460**	Mercedes
6024236510	**1302005460**	Mercedes
6034200120	**1503005460**	Mercedes
6034200220	**1503015460**	Mercedes
6034200320	**1503025460**	Mercedes
6034200520	**1503005460**	Mercedes
6034200620	**1503005460**	Mercedes
6034200720	**1503015460**	Mercedes
6034200820	**1503015460**	Mercedes
6034200920	**1503025460**	Mercedes
6034201020	**1503025460**	Mercedes
607360	**1782705380**	DAF
607855	**1962005380**	DAF
6084200320	**134400**	Mercedes
6084201220	**134401**	Mercedes
6084201320	**134402**	Mercedes
6084201420	**134400**	Mercedes
6084201520	**134401**	Mercedes
6084201620	**134402**	Mercedes
6084202320	**134410**	Mercedes
6084202420	**134410**	Mercedes
6084202720	**134411**	Mercedes
6084203120	**134412**	Mercedes
6084203220	**134413**	Mercedes
6084210010	**1314105910**	Mercedes
6084210110	**1314115910**	Mercedes
6084210210	**1314115910**	Mercedes
6084210310	**1314115910**	Mercedes
6084210410	**1314105910**	Mercedes
6084210510	**1314105910**	Mercedes

JURID / All rights reserved 2005

OE	JURID	
6084210610	**1314115910**	Mercedes
6084210710	**1314115910**	Mercedes
6084210810	**1314105910**	Mercedes
6084210910	**1314105910**	Mercedes
6084211010	**1314115910**	Mercedes
6084211110	**1314115910**	Mercedes
6084211210	**1314105910**	Mercedes
6084211310	**1314115910**	Mercedes
6084211410	**1314115910**	Mercedes
608438	**1783105380**	DAF
608505	**1782905380**	DAF
6085860642	**134400**	Mercedes
6085860742	**134412**	Mercedes
6085860842	**1314105910**	Mercedes
6085860942	**1314105910**	Mercedes
610403	**1558035460**	A Teves
610405	**1558045460**	A Teves
610406	**1558055460**	A Teves
610407	**1534905460**	A Teves
610409	**1534915460**	A Teves
610410	**1534925460**	A Teves
610411	**1534905460**	A Teves
610412	**1534995460**	A Teves
610413	**1534915460**	A Teves
610414	**1534925460**	A Teves
610415	**1558035460**	A Teves
610417	**1558045460**	A Teves
610418	**1558055460**	A Teves
610419	**1558005460**	A Teves
610420	**1558015460**	A Teves
610421	**1558025460**	A Teves
610422	**1558025460**	A Teves
610423	**1558015460**	A Teves
610424	**1558005460**	A Teves
6114230010	**1503015460**	Mercedes
6114230110	**1503025460**	Mercedes
6114230210	**1503025460**	Mercedes
6114230310	**1503015460**	Mercedes
6114230410	**1503025460**	Mercedes
6114230510	**1503025460**	Mercedes
6114230610	**1503005460**	Mercedes
6114230710	**1503005460**	Mercedes
6114231010	**1503005460**	Mercedes
6114231110	**1503015460**	Mercedes
6114231210	**1503025460**	Mercedes
6114231310	**150303**	Mercedes
6114231410	**1503005460**	Mercedes
6114231510	**1503015460**	Mercedes
6114231610	**1503025460**	Mercedes
6114231710	**150303**	Mercedes
6114231810	**1503005460**	Mercedes
6114231910	**1503015460**	Mercedes
6114232010	**1503025460**	Mercedes
6114232110	**150303**	Mercedes
6114232210		Mercedes
6114232310		Mercedes
6114232410	**1503005460**	Mercedes
6114232510	**1503015460**	Mercedes
612106	**1726315700**	DAF
612107	**1726315700**	DAF
612108	**1726315700**	DAF
612109	**1726315700**	DAF
612110	**1961725700**	DAF
612111	**1961725700**	DAF
612112	**172611**	DAF
612113	**172621**	DAF
612114	**1732415700**	DAF

OE	JURID	
612115	**1732415700**	DAF
612339	**1726305700**	DAF
612340	**1726305700**	DAF
612341	**1915015700**	DAF
612342	**1915015700**	DAF
612343	**1925605700**	DAF
612344	**1925605700**	DAF
615176	**1726305700**	DAF
615177	**1726305700**	DAF
6154230010	**1791515380**	Mercedes
6174210410		Mercedes
6174210510		Mercedes
6174210910	**1773905380**	Mercedes
6174211010	**1773915380**	Mercedes
6174211110	**177392**	Mercedes
6174211210	**1768205380**	Mercedes
6174211610	**1768205380**	Mercedes
6174211710	**1768215380**	Mercedes
6174211810	**1768225380**	Mercedes
6174211910	**1768235380**	Mercedes
6174230010	**1949515050**	Mercedes
6174230110	**1949525050**	Mercedes
6174230210	**1949535050**	Mercedes
6174230310	**1949505050**	Mercedes
6174230311		Mercedes
6174230411		Mercedes
6174230511		Mercedes
6174230530	**1949605380**	Mercedes
6174230531		Mercedes
6174230630	**1949615380**	Mercedes
6174230700	**1949405380**	Mercedes
6174230711	**1949405380**	Mercedes
6174230730	**1949625380**	Mercedes
6174230811	**1949415380**	MB
6174230811	**1949415380**	Mercedes
6174230830	**1949635380**	Mercedes
6174230911	**1949425380**	Mercedes
6174231011	**1949435380**	Mercedes
6174231330	**1949505380**	Mercedes
6174231410	**1949415380**	Mercedes
6174231430	**1949515380**	Mercedes
6174231511	**1949505380**	MB
6174231530	**1949525380**	Mercedes
6174231630	**1949535380**	Mercedes
6174231711	**1949515380**	MB
6174231911	**1949405050**	Mercedes
6174232011	**1949415050**	Mercedes
6174232111	**1949525050**	Mercedes
6174232130	**1723805050**	Mercedes
6174232230	**1723815050**	Mercedes
6174232330	**1723825050**	Mercedes
6174232411	**1949515380**	Mercedes
6174232430	**172383**	Mercedes
6174232710		Mercedes
6174232711	**1949515380**	Mercedes
6174232811	**1949515050**	Mercedes
6174232911	**1949525050**	Mercedes
6174233011	**1949535050**	Mercedes
6174233211	**1949615050**	Mercedes
6174233311	**1949615050**	Mercedes
6174233411	**1949625050**	Mercedes
6174233611		Mercedes
6174233710		Mercedes
6174234210	**1949515050**	Mercedes
6174234310	**1723805050**	Mercedes
6174234410	**1723815050**	Mercedes
6174234411	**1723815050**	Mercedes

OE	JURID	
6174234510	**1723825050**	Mercedes
6174234610	**172383**	Mercedes
6174234710	**1949405050**	Mercedes
6174234810	**1949415050**	Mercedes
6174234910	**1949425050**	Mercedes
6174235010	**1949435050**	Mercedes
6174235110	**1949505050**	Mercedes
6174235210	**1949515050**	Mercedes
6174235310	**1949525050**	Mercedes
6174235410	**1949535050**	Mercedes
6174235510	**1949605050**	Mercedes
6174235610	**1949615050**	Mercedes
6174235710	**1949625050**	Mercedes
6174235810	**1949635380**	Mercedes
6174236310	**1723805050**	Mercedes
6174236311	**1949505050**	Mercedes
6174236410	**1723815050**	Mercedes
6174236411		Mercedes
6174236510	**1723825050**	Mercedes
6174236610	**172383**	Mercedes
6174236710	**1949405050**	Mercedes
6174236810	**1949415050**	Mercedes
6174236910	**1949425050**	Mercedes
6174237010	**1949435050**	Mercedes
6174237110	**1949505050**	Mercedes
6174237210	**1949515050**	Mercedes
6174237211	**1949515050**	Mercedes
6174237310	**1949525050**	Mercedes
6174237410	**1949535050**	Mercedes
6174237411	**1949535050**	Mercedes
6174237510	**1949605050**	Mercedes
6174237610	**1949615050**	Mercedes
6174237710	**1949625050**	Mercedes
6174237810	**1949635050**	Mercedes
6174237910	**1949605380**	Mercedes
6174238110	**1949625380**	Mercedes
6174238111	**1723805050**	Mercedes
6174238210	**1949635380**	Mercedes
6174238310	**1723805050**	Mercedes
6174238410	**1723815050**	Mercedes
6174238510	**1723825050**	Mercedes
6174238610	**172383**	Mercedes
6174238710	**1949405050**	Mercedes
6174238810	**1949415050**	Mercedes
6174238910	**1949425050**	Mercedes
6174239010	**1949435050**	Mercedes
6174239110	**1949505050**	Mercedes
6174239210	**1949515050**	Mercedes
6174239310	**1949525050**	Mercedes
6174239410	**1949535050**	Mercedes
6174239510	**1949605050**	Mercedes
6174239610	**1949615050**	Mercedes
6174239710	**1949625050**	Mercedes
6174239810	**1949635050**	Mercedes
619279	**1915015700**	DAF
619280	**1915015700**	DAF
619281	**1961715700**	DAF
619282	**1961715700**	DAF
620251	**1732405700**	DAF
620252	**1732405700**	DAF
620253	**1915005700**	DAF
620254	**1915005700**	DAF
620255	**1925605700**	DAF
620256	**1925605700**	DAF
620257	**1732415700**	DAF
620258	**1732415700**	DAF
620259	**1915015700**	DAF

JURID by Honeywell

© JURID / All rights reserved 2005



OE	JURID	
620260	**1915015700**	DAF
620261	**1925615700**	DAF
620262	**1925615700**	DAF
620575	**1732405700**	DAF
620576	**1732405700**	DAF
620577	**1732405700**	DAF
620578	**1732405700**	DAF
620621	**1925615700**	DAF
6214210110	**1949415380**	Mercedes
6214210410	**1949405380**	Mercedes
6214210510	**1949415380**	Mercedes
6214210610	**1949425380**	Mercedes
6214210710	**1949435380**	Mercedes
6214230011	**1949405380**	Mercedes
624227	**172610**	DAF
624228	**172620**	DAF
624229	**1732405700**	DAF
624230	**1732405700**	DAF
624231	**1726305700**	DAF
624232	**1726305700**	DAF
624233	**1915015700**	DAF
624234	**1915015700**	DAF
624235	**1925605700**	DAF
624236	**1925605700**	DAF
624243	**172610**	DAF
624244	**172620**	DAF
624245	**1726305700**	DAF
624246	**1726305700**	DAF
626619	**172610**	DAF
626620	**172620**	DAF
626621	**1726305700**	DAF
626622	**1726305700**	DAF
627548	**1726305700**	DAF
627549	**1726305700**	DAF
627550	**1726305700**	DAF
627551	**1726305700**	DAF
627552	**1915015700**	DAF
627553	**1915015700**	DAF
627554	**1915015700**	DAF
627555	**1915015700**	DAF
627556	**1925605700**	DAF
627557	**1925605700**	DAF
627558	**1925605700**	DAF
627559	**1925605700**	DAF
629350	**172611**	DAF
629351	**172621**	DAF
629352	**1726315700**	DAF
629353	**1726315700**	DAF
632072	**1726305700**	DAF
632073	**1726305700**	DAF
632437	**1915005700**	DAF
632438	**1915005700**	DAF
632439	**1961705700**	DAF
632440	**1961705700**	DAF
633106858	**1949605380**	Van Hool
633106858	**1949605450**	Van Hool
633106859	**1949605380**	Van Hool
633106859	**1949605450**	Van Hool
633974	**1915015700**	DAF
633975	**1915015700**	DAF
633976	**1961715700**	DAF
633977	**1961715700**	DAF
635797	**1732405700**	DAF
635798	**1732405700**	DAF
635799	**1915015700**	DAF
635800	**1915015700**	DAF
635801	**1925605700**	DAF



OE	JURID	
635802	**1925605700**	DAF
635803	**1961715700**	DAF
635804	**1961715700**	DAF
636064	**1961725700**	DAF
636065	**1961725700**	DAF
636066	**1925615700**	DAF
636067	**1925615700**	DAF
636068	**1915015700**	DAF
636069	**1915015700**	DAF
636070	**1726305700**	DAF
636071	**1726305700**	DAF
636072	**1732405700**	DAF
636073	**1732405700**	DAF
636074	**172610**	DAF
636075	**172620**	DAF
636076	**1961715700**	DAF
636077	**1961715700**	DAF
636078	**1961725700**	DAF
636079	**1961725700**	DAF
636080	**1925605700**	DAF
636081	**1925605700**	DAF
636082	**1925615700**	DAF
636083	**1925615700**	DAF
636084	**1915015700**	DAF
636085	**1915015700**	DAF
636086	**1915015700**	DAF
636087	**1915015700**	DAF
636088	**1726305700**	DAF
636089	**1726305700**	DAF
636090	**1726305700**	DAF
636091	**1726305700**	DAF
638825	**1925605700**	DAF
638826	**1925605700**	DAF
638827	**1925605700**	DAF
638828	**1925605700**	DAF
638829	**1915015700**	DAF
638830	**1915015700**	DAF
639638	**1726305700**	DAF
639639	**1726305700**	DAF
652061	**1726315700**	DAF
652062	**1726315700**	DAF
652063	**1915015700**	DAF
652064	**1915015700**	DAF
652065	**1925615700**	DAF
652066	**1925615700**	DAF
652067	**1961715700**	DAF
652068	**1961715700**	DAF
6524230010	**1791505380**	Mercedes
6524230110	**1791515380**	Mercedes
6524230210	**179152**	Mercedes
6524230310	**179153**	Mercedes
6524230410	**1723805050**	Mercedes
6524230510	**1723815050**	Mercedes
6524230610	**1723825050**	Mercedes
6524230710	**172383**	Mercedes
6524230810	**1949405050**	Mercedes
6524230910	**1949415050**	Mercedes
6524231010	**1949425050**	Mercedes
6524231110	**1949435050**	Mercedes
6524231210	**1949505050**	Mercedes
6524231310	**1949515050**	Mercedes
6524231410	**1949525050**	Mercedes
6524231510	**1949535050**	Mercedes
6524231610	**1949605050**	Mercedes
6524231710	**1949615050**	Mercedes
6524231810	**1949625050**	Mercedes
6524231910	**1949635380**	Mercedes



OE	JURID	
656604	**1732405700**	DAF
656605	**1732405700**	DAF
656606	**1732415700**	DAF
656607	**1732415700**	DAF
6594210010	**1723805050**	Mercedes
6594210110	**1723815050**	Mercedes
6594210210	**1723825050**	Mercedes
6594210410	**1949405050**	Mercedes
6594210510	**1949415050**	Mercedes
6594210610	**1949425050**	Mercedes
6594210710	**1949435050**	Mercedes
6594210810	**1723805050**	Mercedes
6594210910	**1723815050**	Mercedes
6594211010	**1723825050**	Mercedes
6594211110	**172383**	Mercedes
6594211210	**1949405050**	Mercedes
6594211310	**1949415050**	Mercedes
6594211410	**1949425050**	Mercedes
6594211510	**1949435050**	Mercedes
6594211610	**1723805050**	Mercedes
6594211710	**1723815050**	Mercedes
6594211810	**1723825050**	Mercedes
6594211910	**172383**	Mercedes
6594212010	**1949405050**	Mercedes
6594212110	**1949415050**	Mercedes
6594212210	**1949425050**	Mercedes
6594212310	**1949435050**	Mercedes
65942230910	**1949515050**	Mercedes
6594230008	**1949515050**	Mercedes
6594230010	**1949505050**	Mercedes
6594230110	**1949515050**	Mercedes
6594230210	**1949525050**	Mercedes
6594230310	**1949535050**	Mercedes
6594230410	**1949605380**	Mercedes
6594230510	**1949615380**	Mercedes
6594230530	**1949605380**	Mercedes
6594230610	**1949625380**	Mercedes
6594230710	**1949635380**	Mercedes
6594230810	**1949505380**	Mercedes
6594230830	**1949635380**	Mercedes
6594230910	**1949515380**	Mercedes
6594231010	**1949525380**	Mercedes
6594231110	**1949535380**	Mercedes
6594231210	**1949605380**	Mercedes
6594231310	**1949615380**	Mercedes
6594231410	**1949625380**	Mercedes
6594231510	**1949635380**	Mercedes
6594231610	**1949505380**	Mercedes
6594231710	**1949515380**	Mercedes
6594231810	**1949525380**	Mercedes
6594231910	**1949535380**	Mercedes
6594232010	**1949605380**	Mercedes
6594232110	**1949615380**	Mercedes
6594232210	**1949625380**	Mercedes
6594232310	**1949505380**	Mercedes
6594232410	**1949515380**	Mercedes
6594232510	**1949505380**	Mercedes
6594232610	**1949535380**	Mercedes
6594232710	**1949605380**	Mercedes
6594232810	**1949615380**	Mercedes
6594232910	**1949625380**	Mercedes
6594233010	**1949635380**	Mercedes
6594233610	**1949615380**	Mercedes
6594233710	**1949605380**	Mercedes
6594233810	**1949625380**	Mercedes
6594233910	**1949635380**	Mercedes
6594234010	**1949515380**	Mercedes

JURID / All rights reserved 2005

OE	JURID	
6594234110	**1949505380**	MB
6674230010		Mercedes
6674230110	**1503005460**	Mercedes
6674231310		Mercedes
6674231410	**1503005460**	Mercedes
6674231510	**1503015460**	Mercedes
6674231610	**1503025460**	Mercedes
6674231710	**1503025460**	Mercedes
6674231810	**1503005460**	Mercedes
6674231910	**1503015460**	Mercedes
6674232010	**1503025460**	Mercedes
6674232110	**1503025460**	Mercedes
6674232210	**1503005460**	Mercedes
6674232310	**1503015460**	Mercedes
6674232410	**1503025460**	Mercedes
6674232810	**1503025460**	Mercedes
6674232910	**1503005460**	Mercedes
6674233010	**1503015460**	Mercedes
6674233110	**1503025460**	Mercedes
6674233210	**1503025460**	Mercedes
6684210210	**291170**	Mercedes
6684212110	**1505905460**	Mercedes
6684230010	**1735105460**	Mercedes
6684230110	**1735105460**	Mercedes
6684230210	**1735115460**	Mercedes
6684230310	**1735125460**	Mercedes
6684230810	**1735005460**	Mercedes
6684230910	**1735005460**	Mercedes
6684231010	**1735015460**	Mercedes
6684231110	**1735025460**	Mercedes
6684231610	**150690**	Mercedes
6684231710	**150690**	Mercedes
6684231810	**150691**	Mercedes
6684231910	**150692**	Mercedes
6684232510	**1735105460**	Mercedes
6684232610	**1735105460**	Mercedes
6684232710	**1735115460**	Mercedes
6684232810	**1735125460**	Mercedes
6684232910	**1735005460**	Mercedes
6684233010	**1735005460**	Mercedes
6684233110	**1735015460**	Mercedes
6684233210	**1735025460**	Mercedes
6684233310	**1505905460**	Mercedes
6684233410	**1505905460**	Mercedes
6684233510	**1505915460**	Mercedes
6684233610	**150592**	Mercedes
6684233710	**1735105460**	Mercedes
6684233810	**1735105460**	Mercedes
6684233910	**1735115460**	Mercedes
6684234010	**1735125460**	Mercedes
6684234110	**1735005460**	Mercedes
6684234210	**1735005460**	Mercedes
6684234310	**1735015460**	Mercedes
6684234410	**1735025460**	Mercedes
6684234510	**1505905460**	Mercedes
6684234610	**1505905460**	Mercedes
6684234710	**1505915460**	Mercedes
6684234810	**150592**	Mercedes
6684235810	**1505905460**	Mercedes
6684236210	**1505905460**	Mercedes
6684236310	**1505905460**	Mercedes
6684236410	**1505915460**	Mercedes
6684236510	**150592**	Mercedes
669420002	**2983505440**	Mercedes
6694200020	**2983505440**	Mercedes
6694200120	**2983505440**	Mercedes
6694210008	**571272J**	Mercedes

OE	JURID	
6694210108	**2983505440**	Mercedes
6694230410	**1735005460**	Mercedes
6694230510	**1735005460**	Mercedes
6694230610	**1735015460**	Mercedes
6694230710	**1735025460**	Mercedes
6704230110	**1735105460**	Mercedes
6704230210	**1735115460**	Mercedes
6704230310	**1735125460**	Mercedes
6704230410	**1735105460**	Mercedes
6704230510	**1735115460**	Mercedes
6704230610	**1735125460**	Mercedes
6704230710	**1558005460**	Mercedes
6704230810	**1558015460**	Mercedes
6704230910	**1558025460**	Mercedes
6704231010	**1558005460**	Mercedes
6704231110	**1558015460**	Mercedes
6704231210	**1558025460**	Mercedes
6704231310	**1505905460**	Mercedes
6704231410	**1505915460**	Mercedes
6704231510	**150592**	Mercedes
6704231610	**1505905460**	Mercedes
6704231710	**1505915460**	Mercedes
6704231810	**150592**	Mercedes
6704231910	**1505915460**	Mercedes
6704232010	**1505915460**	Mercedes
6704232110	**150592**	Mercedes
6704232210	**1505915460**	Mercedes
6704232211	**1735105460**	Mercedes
6704232310	**1505915460**	Mercedes
6704232311	**1735105460**	Mercedes
6704232410	**150592**	Mercedes
6704232411	**1735115460**	Mercedes
6704232510	**150593**	Mercedes
6704232511	**1735125460**	Mercedes
6704233011	**1735005460**	Mercedes
6704233111	**1735005460**	Mercedes
6704233211	**1735015460**	Mercedes
6704233311	**1735025460**	Mercedes
6704233811	**1505905460**	Mercedes
6704233911	**1505905460**	Mercedes
6704234011	**1505915460**	Mercedes
6704234111	**150592**	Mercedes
6704234711	**1735105460**	Mercedes
6704234811	**1735115460**	Mercedes
6704234911	**1735115460**	Mercedes
6704235011	**1735125460**	Mercedes
6704235110	**150592**	Mercedes
6704235111	**1735005460**	Mercedes
6704235210	**1505915460**	Mercedes
6704235211	**1505905460**	Mercedes
6704235310	**1505915460**	Mercedes
6704235311	**1735115460**	Mercedes
6704235410	**1505905460**	Mercedes
6704235411	**1735125460**	Mercedes
6704235510	**150592**	Mercedes
6704235610	**1505915460**	Mercedes
6704235710	**1505915460**	Mercedes
6704235711	**1505915460**	Mercedes
6704235810	**1505905460**	Mercedes
6704235910	**1735025460**	Mercedes
6704236010	**1735015460**	Mercedes
6704236011	**1735005460**	Mercedes
6704236110	**1735005460**	Mercedes
6704236210	**1735005460**	Mercedes
6704236310	**1735025460**	Mercedes
6704236410	**1735015460**	Mercedes
6704236411	**1735105460**	Mercedes

OE	JURID	
6704236510	**1735005460**	Mercedes
6704236610	**1735005460**	Mercedes
6704236710	**1735125460**	Mercedes
6704236711	**1505905460**	Mercedes
6704236810	**1735125460**	Mercedes
6704236811	**1505905460**	Mercedes
6704236910	**1735115460**	Mercedes
6704236911	**1505915460**	Mercedes
6704237010	**1735105460**	Mercedes
6704237011	**150592**	Mercedes
6704237110	**1735125460**	Mercedes
6704237111	**1735005460**	Mercedes
6704237210	**1735125460**	Mercedes
6704237211	**1735015460**	Mercedes
6704237310	**1735115460**	Mercedes
6704237311	**1735025460**	Mercedes
6704237410	**1735105460**	Mercedes
6704237411	**173503**	Mercedes
6704237511	**1735105460**	Mercedes
6704237611	**1735115460**	Mercedes
6704237711	**1735125460**	Mercedes
6704237811	**173513**	Mercedes
6704238210	**1735115460**	Mercedes
6704238310	**1735115460**	Mercedes
6704238410	**1735125460**	Mercedes
6704238510	**173513**	Mercedes
6704238610	**1735115460**	Mercedes
6704238710	**1735115460**	Mercedes
6704238810	**1735125460**	Mercedes
6704238910	**173513**	Mercedes
6704239010	**1735005460**	Mercedes
6704239110	**1735015460**	Mercedes
6704239210	**1735025460**	Mercedes
6704239310	**173503**	Mercedes
6704239410	**1735005460**	Mercedes
6704239510	**1735015460**	Mercedes
6704239610	**1735025460**	Mercedes
6704239710	**173503**	Mercedes
6704239810	**1505915460**	Mercedes
6704239910	**1505915460**	Mercedes
6734210110	**1516215380**	Mercedes
6734210210	**1516225380**	Mercedes
6734210310	**1516235380**	Mercedes
6734210331	**1728735380**	Mercedes
6734210410	**1727815380**	Mercedes
6734210431	**1728745380**	Mercedes
6734210510	**1727825380**	Mercedes
6734210531	**1728755380**	Mercedes
6734210610	**1727835380**	Mercedes
6734210631	**1728765380**	Mercedes
6734210710	**1728015380**	Mercedes
6734210731	**1728035380**	Mercedes
6734210810	**1728025380**	Mercedes
6734210831	**1728045380**	Mercedes
6734210910	**1728035380**	Mercedes
6734210931	**1728055380**	Mercedes
6734211010	**1728715380**	Mercedes
6734211031	**1728065380**	Mercedes
6734211110	**1728725380**	Mercedes
6734211131	**1727835380**	Mercedes
6734211210	**1728735380**	Mercedes
6734211231	**1727845380**	Mercedes
6734211310	**1516205380**	Mercedes
6734211331	**1727855380**	Mercedes
6734211410	**1727805380**	Mercedes
6734211431	**1727865380**	Mercedes
6734211510	**1728005380**	Mercedes

JURID by Honeywell

© JURID / All rights reserved 2005

OE	JURID	
6734211531	**1516235380**	Mercedes
6734211610	**1728705380**	Mercedes
6734211631	**1516245380**	Mercedes
6734211731	**151625**	Mercedes
6734211831	**151626**	Mercedes
6734212331	**1727835380**	Mercedes
6734212431	**1727845380**	Mercedes
6734212531	**1727855380**	Mercedes
6734212631	**1727865380**	Mercedes
6734212731	**1728035380**	Mercedes
6734212831	**1728045380**	Mercedes
6734212931	**1728055380**	Mercedes
6734213031	**1728065380**	Mercedes
6734213131	**1728735380**	Mercedes
6734213231	**1728745380**	Mercedes
6734213331	**1728755380**	Mercedes
6734213431	**1728765380**	Mercedes
6734213530	**1728735380**	Mercedes
6734213631	**1728035380**	Mercedes
6734213730	**1728755380**	Mercedes
6734213910	**1728705380**	Mercedes
6734214610	**1728005380**	Mercedes
6734215010	**1727805380**	Mercedes
6734215410	**1516205380**	Mercedes
6734215810	**1728735380**	Mercedes
6734215830	**1516235380**	Mercedes
6734215910	**1728745380**	Mercedes
6734215930	**1516245380**	Mercedes
6734216010	**1728755380**	Mercedes
6734216030	**151625**	Mercedes
6734216110	**1728765380**	Mercedes
6734216130	**151626**	Mercedes
6734216210	**1728035380**	Mercedes
6734216230	**1728035380**	Mercedes
6734216310	**1728045380**	Mercedes
6734216330	**1728045380**	Mercedes
6734216410	**1728055380**	Mercedes
6734216430	**1728055380**	Mercedes
6734216510	**1728065380**	Mercedes
6734216530	**1728065380**	Mercedes
6734216610	**1727835380**	Mercedes
6734216710	**1727845380**	Mercedes
6734216730		Mercedes
6734216810	**1727855380**	Mercedes
6734216830		Mercedes
6734216910	**1727865380**	Mercedes
6734216930		Mercedes
6734217010	**1516235380**	Mercedes
6734217110	**1516245380**	Mercedes
6734217210	**151625**	Mercedes
6734217310	**151626**	Mercedes
6734217610	**1728735380**	Mercedes
6734217710	**1728745380**	Mercedes
6734217810	**1728745380**	Mercedes
6734217830	**1728705380**	Mercedes
6734217910	**1728765380**	Mercedes
6734217930	**1728715380**	Mercedes
6734218010	**1728035380**	Mercedes
6734218030	**1728725380**	Mercedes
6734218110	**1728045380**	Mercedes
6734218130	**1728735380**	Mercedes
6734218210	**1728045380**	Mercedes
6734218230	**1728005380**	Mercedes
6734218310	**1728055380**	Mercedes
6734218330	**1728015380**	Mercedes
6734218410	**1727835380**	Mercedes
6734218430	**1728025380**	Mercedes

OE	JURID	
6734218510	**1727845380**	Mercedes
6734218530	**1728035380**	Mercedes
6734218610	**1727845380**	Mercedes
6734218630	**1727825380**	Mercedes
6734218710	**1727855380**	Mercedes
6734218730	**1727815380**	Mercedes
6734218810	**1516235380**	Mercedes
6734218830	**1727845380**	Mercedes
6734218910	**1516245380**	Mercedes
6734218930	**1727855380**	Mercedes
6734219010	**1516245380**	Mercedes
6734219110	**151625**	Mercedes
6734219430	**1728735380**	Mercedes
6734219530	**1728745380**	Mercedes
6734219630	**1728755380**	Mercedes
6734219730	**1728065380**	Mercedes
6744210110		Mercedes
6744210210		Mercedes
6744210310		Mercedes
6744210410		Mercedes
6744210430	**1950615380**	Mercedes
6744210510		Mercedes
6744210530	**1950625380**	Mercedes
6744210610		Mercedes
6744210630	**1950645380**	Mercedes
6744210730	**1950605380**	Mercedes
6744210810		Mercedes
6744210910		Mercedes
6744210930	**1729025380**	Mercedes
6744211010		Mercedes
6744211030	**1729035380**	Mercedes
6744211110		Mercedes
6744211130	**1729045380**	Mercedes
6744211210		Mercedes
6744211230	**1728705380**	Mercedes
6744211310		Mercedes
6744211330	**1728715380**	Mercedes
6744211430	**1728725380**	Mercedes
6744211530	**1728735380**	Mercedes
6744211630	**1728005380**	Mercedes
6744211730	**1728015380**	Mercedes
6744211810	**179190**	Mercedes
6744211830	**1728025380**	Mercedes
6744211910	**179191**	Mercedes
6744211930	**1728035380**	Mercedes
6744212010	**179192**	Mercedes
6744212030	**1727805380**	Mercedes
6744212110		Mercedes
6744212130	**1727815380**	Mercedes
6744212210		Mercedes
6744212230	**1727825380**	Mercedes
6744212310	**179192**	Mercedes
6744212330	**1727835380**	Mercedes
6744212410	**179200**	Mercedes
6744212430	**1516205380**	Mercedes
6744212510	**179201**	Mercedes
6744212530	**1516215380**	Mercedes
6744212610	**179202**	Mercedes
6744212630	**1516225380**	Mercedes
6744212730	**1516235380**	Mercedes
6744212810	**197940**	Mercedes
6744212830	**1728705380**	Mercedes
6744212910	**197930**	Mercedes
6744212930	**1728715380**	Mercedes
6744213010	**197941**	Mercedes
6744213030	**1728725380**	Mercedes
6744213110	**197931**	Mercedes

OE	JURID	
6744213130	**1728735380**	Mercedes
6744213210	**197942**	Mercedes
6744213230	**1728005380**	Mercedes
6744213310	**197932**	Mercedes
6744213330	**1728015380**	Mercedes
6744213410	**179230**	Mercedes
6744213430	**1728025380**	Mercedes
6744213510	**179220**	Mercedes
6744213530	**1728035380**	Mercedes
6744213610	**179231**	Mercedes
6744213630	**1727805380**	Mercedes
6744213710	**179221**	Mercedes
6744213730	**1727815380**	Mercedes
6744213810	**179232**	Mercedes
6744213830	**1727825380**	Mercedes
6744213910	**179222**	Mercedes
6744213930	**1727835380**	Mercedes
6744214030	**1516205380**	Mercedes
6744214130	**1516215380**	Mercedes
6744214230	**1516225380**	Mercedes
6744214330	**1516235380**	Mercedes
6744214430	**1728705380**	Mercedes
6744214510	**1950615450**	Mercedes
6744214530	**1728715380**	Mercedes
6744214610	**1729015380**	Mercedes
6744214630	**1728725380**	Mercedes
6744214710	**1950615380**	Mercedes
6744214730	**1728735380**	Mercedes
6744214810	**1729015380**	Mercedes
6744214830	**1728005380**	Mercedes
6744214910	**1950605380**	Mercedes
6744214930	**1728015380**	Mercedes
6744215010	**1729005380**	Mercedes
6744215030	**1728025380**	Mercedes
6744215110	**1950605380**	Mercedes
6744215130	**1728035380**	Mercedes
6744215210	**1729005380**	Mercedes
6744215230	**1727805380**	Mercedes
6744215310	**1950605380**	Mercedes
6744215330	**1727815380**	Mercedes
6744215410	**1729005380**	Mercedes
6744215430	**1727825380**	Mercedes
6744215510	**1950605380**	Mercedes
6744215530	**1727835380**	Mercedes
6744215610	**1729005380**	Mercedes
6744215630	**1516205380**	Mercedes
6744215710	**1950605380**	Mercedes
6744215730	**1516215380**	Mercedes
6744215810	**1729005380**	Mercedes
6744215830	**1516225380**	Mercedes
6744215910	**1950605380**	Mercedes
6744215930	**1516235380**	Mercedes
6744216010	**1729005380**	Mercedes
6744216510	**1950635380**	Mercedes
6744216710	**1950605380**	Mercedes
6744216810	**1950605380**	Mercedes
6744218210	**1729005380**	Mercedes
6744218310	**1729005380**	Mercedes
6744218410	**1729015380**	Mercedes
6744218510	**1729015380**	Mercedes
6744218610	**1729025380**	Mercedes
6744218710	**1729025380**	Mercedes
6744218810	**1729035380**	Mercedes
6744218910	**1729035380**	Mercedes
6744219010	**1950605380**	Mercedes
6744219110	**1950605380**	Mercedes
6744219210	**1950615380**	Mercedes

JURID / All rights reserved 2005

OE	JURID	
6744219310	**1950615380**	Mercedes
6744219410	**1950625380**	Mercedes
6744219510	**1950625380**	Mercedes
6744219610	**1950635380**	Mercedes
6744219710	**1950635380**	Mercedes
6744230010	**1729015380**	Mercedes
6744230310	**1729005380**	Mercedes
6744230410	**1729015380**	Mercedes
6754210530	**1729045380**	Mercedes
6754210630	**1729025380**	Mercedes
6754210810	**179180**	Mercedes
6754210830	**1729025380**	Mercedes
6754210910	**179181**	Mercedes
6754210930	**1950645380**	Mercedes
6754211010	**179182**	Mercedes
6754211030	**1950655380**	Mercedes
6754211110	**179170**	Mercedes
6754211130	**195066**	Mercedes
6754211210	**179171**	Mercedes
6754211310	**179172**	Mercedes
6754211330	**1729035380**	Mercedes
6754211430	**1729045380**	Mercedes
6754211530	**1729055380**	Mercedes
6754211630	**1729065380**	Mercedes
6754211710		Mercedes
6754211730	**1729035380**	Mercedes
6754211810		Mercedes
6754211830	**1729045380**	Mercedes
6754211930	**1729055380**	Mercedes
6754212030	**1729065380**	Mercedes
6754212130	**1950625380**	Mercedes
6754212230	**1950635380**	Mercedes
6754212330	**1950645380**	Mercedes
6754212430	**1950655380**	Mercedes
6754212530	**1950625380**	Mercedes
6754212630	**1950635380**	Mercedes
6754212730	**1950645380**	Mercedes
6754212830	**1950655380**	Mercedes
6754212930	**1907825380**	Mercedes
6754213030	**1907835380**	Mercedes
6754213130	**190784**	Mercedes
6754213320	**190785**	Mercedes
6754213330	**1907825380**	Mercedes
6754213430	**1907835380**	Mercedes
6754213530	**190784**	Mercedes
6754213630	**190785**	Mercedes
6754213710	**1729035380**	Mercedes
6754213730	**1729025380**	Mercedes
6754213810	**1729035380**	Mercedes
6754213830	**1729035380**	Mercedes
6754213910	**1729045380**	Mercedes
6754213930	**1729045380**	Mercedes
6754214010	**1729045380**	Mercedes
6754214030	**1729055380**	Mercedes
6754214110	**1729055380**	Mercedes
6754214130	**1950635380**	Mercedes
6754214210	**1729055380**	Mercedes
6754214230	**1950645380**	Mercedes
6754214310	**1729065380**	Mercedes
6754214330	**1950655380**	Mercedes
6754214410	**1729065380**	Mercedes
6754214430	**195066**	Mercedes
6754214510	**1950625380**	Mercedes
6754214530	**1907825380**	Mercedes
6754214610	**1950625380**	Mercedes
6754214630	**1907835380**	Mercedes
6754214710	**1950635380**	Mercedes

OE	JURID	
6754214730	**190784**	Mercedes
6754214810	**1950635380**	Mercedes
6754214830	**190785**	Mercedes
6754214910	**1950645380**	Mercedes
6754215010	**1950645380**	Mercedes
6754215110	**1950655380**	Mercedes
6754215210	**1950655380**	Mercedes
6754216110	**1729025380**	Mercedes
6754216210	**1729025380**	Mercedes
6754216310	**1729045380**	Mercedes
6754216410	**1729045380**	Mercedes
6754216510	**1729055380**	Mercedes
6754216610	**1729055380**	Mercedes
6754216710	**1729065380**	Mercedes
6754216810	**1729065380**	Mercedes
6754216910	**1950625380**	Mercedes
6754217010	**1950625380**	Mercedes
6754217110	**1950635380**	Mercedes
6754217210	**1950635380**	Mercedes
6754217310	**1950655380**	Mercedes
6754217410	**1950655380**	Mercedes
6754217510	**195066**	Mercedes
6754217610	**195066**	Mercedes
6754218010	**1907825380**	Mercedes
6754218110	**1907825380**	Mercedes
6754218210	**1907835380**	Mercedes
6754218310	**1907835380**	Mercedes
6754218410	**190784**	Mercedes
6754218510	**190784**	Mercedes
6754218610	**190785**	Mercedes
6754218710	**190785**	Mercedes
6754218810	**1907825380**	Mercedes
6754218910	**1907825380**	Mercedes
6754219010	**1907835380**	Mercedes
6754219110	**1907835380**	Mercedes
6754219210	**190784**	Mercedes
6754219310	**190784**	Mercedes
6754219410	**190785**	Mercedes
6754219510	**190785**	Mercedes
6754219610	**1907825380**	Mercedes
6754219710	**1907825380**	Mercedes
6754219810	**1907835380**	Mercedes
6754219910	**190784**	Mercedes
6754230430	**1729035380**	Mercedes
6764210010	**1729005380**	Mercedes
6764210110	**1729015380**	Mercedes
6764210210	**1729025380**	Mercedes
6764210310	**1729035380**	Mercedes
6764210410	**1950605380**	Mercedes
6764210510	**1950615380**	Mercedes
6764210610	**1950625380**	Mercedes
6764210710	**1950635380**	Mercedes
6764210810	**190780**	Mercedes
6764210910	**190781**	Mercedes
6764211010	**1907825380**	Mercedes
6764211110	**1907835380**	Mercedes
6764211210	**1729035380**	Mercedes
6764211310	**1729045380**	Mercedes
6764211410	**1729055380**	Mercedes
6764211510	**1729065380**	Mercedes
6764211610	**1950635380**	Mercedes
6764211710	**1950645380**	Mercedes
6764211810	**1950655380**	Mercedes
6764211910	**195066**	Mercedes
6764212010	**1907825380**	Mercedes
6764212110	**1907835380**	Mercedes
6764212210	**190784**	Mercedes

OE	JURID	
6764212310	**190785**	Mercedes
6764212410	**1729035380**	Mercedes
6764212510	**1729045380**	Mercedes
6764212610	**1729055380**	Mercedes
6764212710	**1729065380**	Mercedes
6764212810	**1950635380**	Mercedes
6764212910	**1950645380**	Mercedes
6764213010	**1950655380**	Mercedes
6764213110	**195066**	Mercedes
6764213210	**1907825380**	Mercedes
6764213310	**1907835380**	Mercedes
6764213410	**190784**	Mercedes
6764213510	**190785**	Mercedes
6764217110		Mercedes
6764217210		Mercedes
68034167	**1709205460**	Steyr
68034168	**1709205460**	Steyr
6803432	**1709205460**	Steyr
6803433	**1709205460**	Steyr
6803471	**1709205460**	Steyr
6803472	**1709205460**	Steyr
680799	**172610**	DAF
680800	**172620**	DAF
680801	**172611**	DAF
680802	**172621**	DAF
680803	**1732405700**	DAF
680804	**1732405700**	DAF
680805	**1732415700**	DAF
680806	**1732415700**	DAF
680807	**1726305700**	DAF
680808	**1726305700**	DAF
680809	**1726315700**	DAF
680810	**1726315700**	DAF
680811	**1915005700**	DAF
680812	**1915005700**	DAF
680813	**1915015700**	DAF
680814	**1915015700**	DAF
680815	**1925605700**	DAF
680816	**1925605700**	DAF
680817	**1925615700**	DAF
680818	**1925615700**	DAF
680825	**172610**	DAF
680826	**172620**	DAF
680827	**172611**	DAF
680828	**172621**	DAF
680829	**1732405700**	DAF
680830	**1732405700**	DAF
680831	**1732415700**	DAF
680832	**1732415700**	DAF
680833	**1726305700**	DAF
680834	**1726305700**	DAF
680835	**1726315700**	DAF
680836	**1726315700**	DAF
680837	**1915005700**	DAF
680838	**1915005700**	DAF
680839	**1915015700**	DAF
680840	**1915015700**	DAF
680841	**1925605700**	DAF
680842	**1925605700**	DAF
680843	**1925615700**	DAF
680844	**1925615700**	DAF
680877	**1732405700**	DAF
680878	**1732415700**	DAF
680879	**1726305700**	DAF
680880	**1726315700**	DAF
680881	**1915005700**	DAF
680882	**1915015700**	DAF

JURID / All rights reserved 2005

OE	JURID	
680883	**1925605700**	DAF
680885	**1915005700**	DAF
681270	**1726305700**	DAF
681272	**1726315700**	DAF
681274	**1915005700**	DAF
681276	**1915015700**	DAF
681278	**1925605700**	DAF
681280	**1925615700**	DAF
681282	**1915005700**	DAF
681284	**1925605700**	DAF
681290	**1961705700**	DAF
681292	**1961715700**	DAF
681430	**1915005700**	DAF
681434	**1925605700**	DAF
681539	**1991415700**	DAF
681540	**1991415700**	DAF
681575	**1925605700**	DAF
681579	**1989015700**	DAF
681580	**1989025700**	DAF
681581	**1990015700**	DAF
681582	**1990025700**	DAF
681677	**1990015700**	DAF
681678	**1990025700**	DAF
681679	**1988815700**	DAF
681712	**1989025700**	DAF
681788	**1915005700**	DAF
681789	**1915015700**	DAF
681790	**1925605700**	DAF
681791	**1925615700**	DAF
681791	**1925615700**	DAF
681792	**1961705700**	DAF
681793	**1961715700**	DAF
681794	**1726305700**	DAF
681794	**1726305700**	DAF
681799	**1732405700**	DAF
681801	**1732415700**	DAF
681817	**1738305700**	DAF
681819	**1738315700**	DAF
681849	**1726315700**	DAF
681849	**1726315700**	DAF
681920	**1903204040**	DAF
681920	**1915025700**	DAF
681968	**1903204040**	DAF
681969	**1903214040**	DAF
681970	**1903224040**	DAF
681971	**1909404040**	DAF
682035	**1726305700**	DAF
682037	**1915005700**	DAF
682039	**1915005700**	DAF
682040	**1915015700**	DAF
682041	**1961705700**	DAF
682083	**1991405700**	DAF
682084	**1991415700**	DAF
682087	**1991405700**	DAF
682088	**1991415700**	DAF
682089	**1991405700**	DAF
682092	**1988805700**	DAF
682093	**1988815700**	DAF
682096	**1988805700**	DAF
682097	**1988815700**	DAF
682098	**1988805700**	DAF
682102	**1989005700**	DAF
682103	**1989015700**	DAF
682105	**1989005700**	DAF
682106	**1989015700**	DAF
682107	**1989005700**	DAF
682110	**1990005700**	DAF

OE	JURID	
682111	**1990015700**	DAF
682114	**1990005700**	DAF
682115	**1990015700**	DAF
682116	**1990005700**	DAF
682416	**1901005700**	DAF
682416	**1901005700**	DAF
682417	**1901015700**	DAF
682417	**1901015700**	DAF
682418	**1901005700**	DAF
682419	**1901015700**	DAF
682421	**1905205700**	DAF
682422	**1905215700**	DAF
682422	**1905215700**	DAF
682423	**1905205700**	DAF
682424	**1905215700**	DAF
682426	**1906305700**	DAF
682426	**1906305700**	DAF
682427	**1906305700**	DAF
682427	**1906315700**	DAF
682428	**1906315700**	DAF
682429	**1906325700**	DAF
682431	**1906905700**	DAF
682432	**1906915700**	DAF
682432	**1906915700**	DAF
682433	**1906905700**	DAF
682434	**1906915700**	DAF
682436	**1701205700**	DAF
682437	**1701215700**	DAF
682438	**1701205700**	DAF
682439	**1701215700**	DAF
682441	**1902405700**	DAF
682442	**1902415700**	DAF
682443	**1902405700**	DAF
682444	**1902415700**	DAF
682577	**1992315380**	DAF
682743	**1992305380**	DAF
682744	**1992315380**	DAF
682807	**1915005700**	DAF
682808	**1915015700**	DAF
682809	**1925605700**	DAF
682833	**1738305700**	DAF
682833		DAF
682834	**1738315700**	DAF
682834		DAF
682835	**1732405700**	DAF
682835		DAF
682836		DAF
682837	**1726305700**	DAF
682837		DAF
682838	**1726315700**	DAF
682838		DAF
682839	**1915005700**	DAF
682839	**1915005700**	DAF
682840	**1915015700**	DAF
682840	**1915015700**	DAF
682841	**1925605700**	DAF
682841	**1925605700**	DAF
682842	**1925615700**	DAF
682842	**1925615700**	DAF
682843		DAF
682844		DAF
682845	**1990005700**	DAF
682845	**1990005700**	DAF
682846	**1990015700**	DAF
682846	**1990015700**	DAF
682847	**1988805700**	DAF
682847	**1988805700**	DAF

OE	JURID	
682848	**1988815700**	DAF
682848	**1988815700**	DAF
682849	**1989005700**	DAF
682849	**1989005700**	DAF
682850	**1989015700**	DAF
682850	**1989015700**	DAF
682851	**1991405700**	DAF
682851	**1991405700**	DAF
682852	**1991415700**	DAF
682852	**1991415700**	DAF
682853	**1701205700**	DAF
682853		DAF
682854		DAF
682855	**1902405700**	DAF
682855	**1902405700**	DAF
682856	**1902415700**	DAF
682856	**1902415700**	DAF
682857	**1901005700**	DAF
682857	**1901005700**	DAF
682858	**1901015700**	DAF
682858	**1901015700**	DAF
682859	**1905205700**	DAF
682859	**1905205700**	DAF
682860	**1905215700**	DAF
682860	**1905215700**	DAF
682861	**1906305700**	DAF
682861	**1906305700**	DAF
682862	**1906315700**	DAF
682862	**1906315700**	DAF
682863	**1906905700**	DAF
682863	**1991405700**	DAF
682864	**1906915700**	DAF
682864	**1991415700**	DAF
682873	**1915025700**	DAF
683011	**1726305700**	DAF
683012	**1726315700**	DAF
683013	**1915005700**	DAF
683014	**1915015700**	DAF
683015	**1915025700**	DAF
683016	**1925605700**	DAF
683017	**1925615700**	DAF
683018	**1961705700**	DAF
683019	**1961715700**	DAF
683020	**1961725700**	DAF
683021	**1990005700**	DAF
683022	**1990015700**	DAF
683023	**1988805700**	DAF
683024	**1988815700**	DAF
683025	**1989005700**	DAF
683026	**1989015700**	DAF
683027	**1991405700**	DAF
683028	**1991415700**	DAF
683029	**1701205700**	DAF
683030	**1701215700**	DAF
683031	**1902405700**	DAF
683032	**1902415700**	DAF
683033	**1901005700**	DAF
683034	**1901015700**	DAF
683035	**1905205700**	DAF
683036	**1905215700**	DAF
683037	**1906305700**	DAF
683038	**1906315700**	DAF
683039	**1906905700**	DAF
683040	**1906915700**	DAF
683063	**1738305700**	DAF
683064	**1738315700**	DAF
683065	**1732405700**	DAF

JURID / All rights reserved 2005

OE	JURID	
683066	**1732415700**	DAF
68320504NGZ	**2903005391**	Kassbohrer
68323004	**587019J**	LUCAS
683262	**1915005700**	DAF
683263	**1915015700**	DAF
683265	**1925605700**	DAF
683266	**1990015700**	DAF
683267	**1990025700**	DAF
683268	**1988815700**	DAF
683269	**1988825700**	DAF
683270	**1989015700**	DAF
683271	**1989025700**	DAF
683272	**1991405700**	DAF
683273	**1991415700**	DAF
683276	**1905205700**	DAF
683277	**1905215700**	DAF
683280	**1906905700**	DAF
683281	**1906915700**	DAF
683283	**1925615700**	DAF
683283	**1925625700**	DAF
683313	**1961705700**	DAF
683314	**1961725700**	DAF
683314	**1961715700**	DAF
683317	**1902405700**	DAF
683318	**1902415700**	DAF
69000340083	**1789703290**	Steyr
69000340084	**1789713290**	Steyr
69000440049	**1775803270**	Steyr
69100440001	**1775803270**	Steyr
69100440002	**1775813270**	Steyr
69200340002	**1982109580**	Steyr
69823	**2910815390**	Knorr
702971	**1909404040**	DAF
70707	**1901005700**	DAF
70707	**1901005700**	DAF
70708	**1901005700**	DAF
70708	**1901005700**	DAF
70709	**1905205700**	DAF
70709	**1905205700**	DAF
70710	**1905205700**	DAF
70710	**1905205700**	DAF
7160118	**1779203320**	Iveco
7160120	**1779203320**	Iveco
7160121	**1779213320**	Iveco
7160125	**1779203320**	Iveco
7160127	**1779203320**	Iveco
7160128	**1779213320**	Iveco
7160129	**1709403320**	Iveco
7160131	**1709403320**	Iveco
7160132	**1709413320**	Iveco
7160138	**1740805380**	Iveco
7160171	**1763503320**	Iveco
7160175	**1763503320**	Iveco
7160834	**1786909530**	Iveco
7160835	**1786909530**	Iveco
71822	**1701205700**	DAF
71823	**1701205700**	DAF
721300	**1939704040**	DAF
72400671	**1900405380**	NEOPLAN
72400671	**1900405450**	NEOPLAN
72400671	**1974305380**	NEOPLAN
72400671	**1974305450**	NEOPLAN
751009	**1907501820**	Scania
751010	**1716101820**	Scania
751011	**1939301820**	Scania
751011	**1939301230**	Scania
751012	**1939301820**	Scania

OE	JURID	
751012	**1939301230**	Scania
751039	**1939301820**	Scania
751039	**1939301230**	Scania
7590120	**2937409560**	Brembo
7594410	**2912104531**	Brembo
7701004485	**1749705380**	RVI
7701008387	**1774403320**	RVI
7701011415	**1749705380**	RVI
7701011840	**1730703320**	RVI
7701011856	**1730713320**	RVI
7701200074	**1947903290**	RVI
7701200075	**1947913290**	RVI
78044727	**1724805380**	Steyr
78044733	**1724805380**	Steyr
79000340022	**1709205460**	Steyr
79000340023	**1709205460**	Steyr
79000340030	**1709205460**	Steyr
79000340031	**1709205460**	Steyr
79000340073	**1709205460**	Steyr
79000340074	**1709205460**	Steyr
79200340065	**1709205460**	Steyr
79200340066	**1709205460**	Steyr
7G3332	**1728505050**	Steyr
7G3332A	**1728515050**	Steyr
800	**1936504040**	Trailor
800	**1936501230**	Trailor
80140200	**2974705440**	Neoplan
80455100	**2968805440**	Neoplan
80455700	**2907705390**	Neoplan
80502200037	**1949425450**	MAN
81163	**2912005390**	SAF / Sauer
81259376011	**587017J**	MAN
81259376012	**587018J**	MAN
81502200000	**172860**	MAN
81502200001	**1513603320**	MAN
81502200002	**170730**	MAN
81502200003	**170740**	MAN
81502200005	**190130**	MAN
81502200006	**170400**	MAN
81502200010		MAN
81502200012		MAN
81502200014		MAN
81502200022	**171600**	MAN
81502200024	**170730**	MAN
81502200026	**1947305380**	MAN
81502200029	**170740**	MAN
81502200030	**171600**	MAN
81502200033	**1947503270**	MAN
81502200038	**170400**	MAN
81502200039	**1728505050**	MAN
81502200040	**1947503270**	MAN
81502200043	**1947305380**	MAN
81502200044	**1513603320**	MAN
81502200046	**172860**	MAN
81502200047	**172860**	MAN
81502200055	**172860**	MAN
81502200056	**170400**	MAN
81502200059	**171360**	MAN
81502200060	**170400**	MAN
81502200061	**170730**	MAN
81502200062	**170740**	MAN
81502200066	**1728505050**	MAN
81502200070	**191310**	MAN
81502200071	**191310**	MAN
81502200074	**1513603320**	MAN
81502200075	**1513603320**	MAN
81502200078	**1513603320**	MAN

OE	JURID	
81502200079	**172861**	MAN
81502200080	**172861**	MAN
81502200082	**1728595380**	MAN
81502200085	**170401**	MAN
81502200086	**171600**	MAN
81502200087	**171600**	MAN
81502200090	**1728595380**	MAN
81502200092	**1728515050**	MAN
81502200095	**190080**	MAN
81502200096	**191311**	MAN
81502200097	**191311**	MAN
81502200101	**1513603320**	MAN
81502200102	**1728595380**	MAN
81502200105	**1728515050**	MAN
81502200110	**1513603320**	MAN
81502200112	**1728505050**	MAN
81502200113	**172860**	MAN
81502200114	**172861**	MAN
81502200115	**190081**	MAN
81502200116	**190080**	MAN
81502200117	**1728515050**	MAN
81502200119	**171601**	MAN
81502200120	**1947513270**	MAN
81502200121	**1947513270**	MAN
81502200123	**151361**	MAN
81502200124	**1513603320**	MAN
81502200125	**171601**	MAN
81502200126	**171600**	MAN
81502200127	**194710**	MAN
81502200128	**194720**	MAN
81502200133	**194710**	MAN
81502200134	**194720**	MAN
81502200135	**191950**	MAN
81502200136	**191960**	MAN
81502200137	**191950**	MAN
81502200138	**191960**	MAN
81502200139	**194732**	MAN
81502200140	**194732**	MAN
81502200144	**172860**	MAN
81502200145	**172860**	MAN
81502200148	**1949425380**	MAN
81502200150	**194732**	MAN
81502200151	**194732**	MAN
81502200152	**1947513270**	MAN
81502200153	**1947513270**	MAN
81502200156		MAN
81502200157		MAN
81502200158	**171601**	MAN
81502200171	**172861**	MAN
81502200179	**194732**	MAN
81502200180	**194732**	MAN
81502200181	**172861**	MAN
81502200182	**170731**	MAN
81502200183	**170741**	MAN
81502200184	**1947305380**	MAN
81502200185	**1947305380**	MAN
81502200186	**1728515050**	MAN
81502200187		MAN
81502200188		MAN
81502200189		MAN
81502200190		MAN
81502200191		MAN
81502200192		MAN
81502200193	**171601**	MAN
81502200194	**1947513270**	MAN
81502200195	**1947513270**	MAN
81502200196	**151361**	MAN

JURID / All rights reserved 2005

OE	JURID	
81502200198		MAN
81502200199		MAN
81502200200		MAN
81502200201		MAN
81502200202	1741005380	MAN
81502200203	1741005380	MAN
81502200204	175830	MAN
81502200205	175690	MAN
81502200206	1741005380	MAN
81502200207	1741015380	MAN
81502200208	1741005380	MAN
81502200209	1741005380	MAN
81502200210	175830	MAN
81502200211	175690	MAN
81502200222	1749705380	MAN
81502200223	1749705380	MAN
81502200224	1724703320	MAN
81502200225	1724703320	MAN
81502200226	170731	MAN
81502200227	170741	MAN
81502200228	1947305380	MAN
81502200229	1947305380	MAN
81502200230	170732	MAN
81502200231	170742	MAN
81502200232	1947305380	MAN
81502200233	1947305380	MAN
81502200235	1723805380	MAN
81502200237	194732	MAN
81502200238	1949515380	MAN
81502200239	174102	MAN
81502200240	1741015380	MAN
81502200241	1947305380	MAN
81502200242	1947305380	MAN
81502200244	1741005380	MAN
81502200245	1741005380	MAN
81502200246	1728515050	MAN
81502200251	1728515050	MAN
81502200252	171601	MAN
81502200253	1947503270	MAN
81502200254	1947503270	MAN
81502200257	151361	MAN
81502200259	1772805380	MAN
81502200260	1772805380	MAN
81502200261	1772805380	MAN
81502200263	1947305380	MAN
81502200264	1947305380	MAN
81502200265	1947503270	MAN
81502200266	1947503270	MAN
81502200267	194752	MAN
81502200268	194752	MAN
81502200269	194732	MAN
81502200270	194732	MAN
81502200271	1728525050	MAN
81502200274	1728525050	MAN
81502200275	1749715380	MAN
81502200276	1749715380	MAN
81502200277	1724713320	MAN
81502200278	1724713320	MAN
81502200279	174972	MAN
81502200280	174972	MAN
81502200281	172472	MAN
81502200282	172472	MAN
81502200283	1949515380	MAN
81502200284	1949525380	MAN
81502200285	1949535380	MAN
81502200286	151361	MAN
81502200287	151362	MAN

OE	JURID	
81502200288	170400	MAN
81502200289	170400	MAN
81502200290	170401	MAN
81502200291	170401	MAN
81502200292	171601	MAN
81502200293	171602	MAN
81502200294	1728515050	MAN
81502200295	172861	MAN
81502200296	1728515050	MAN
81502200297	1728515050	MAN
81502200298	1728525050	MAN
81502200299	1728525050	MAN
81502200300	172862	MAN
81502200301	172862	MAN
81502200302	191310	MAN
81502200303	191310	MAN
81502200304	194753	MAN
81502200305	194753	MAN
81502200306	194753	MAN
81502200307	194711	MAN
81502200308	194711	MAN
81502200309	194711	MAN
81502200310	194733	MAN
81502200311	194733	MAN
81502200312	194733	MAN
81502200313	194733	MAN
81502200314	194733	MAN
81502200315	194733	MAN
81502200330	1723815380	MAN
81502200331	1723825380	MAN
81502200332	172383	MAN
81502200334	1949415380	MAN
81502200335	1949425380	MAN
81502200336	1949435380	MAN
81502200337	1949415380	MAN
81502200338	1949425380	MAN
81502200339	1949435380	MAN
81502200340	151361	MAN
81502200344	1949615380	MAN
81502200345	1949625380	MAN
81502200346	1949635380	MAN
81502200347	170401	MAN
81502200348	172862	MAN
81502200349	1728525050	MAN
81502200350	1728525050	MAN
81502200351	172862	MAN
81502200352	190082	MAN
81502200353	194753	MAN
81502200354	194753	MAN
81502200355	151362	MAN
81502200356	171602	MAN
81502200357	194711	MAN
81502200358	194711	MAN
81502200359	194733	MAN
81502200360	194733	MAN
81502200361	172862	MAN
81502200364	172862	MAN
81502200367	1741005380	MAN
81502200368	1741005380	MAN
81502200369	190082	MAN
81502200370	191950	MAN
81502200371	191960	MAN
81502200372	1741015380	MAN
81502200373	1741015380	MAN
81502200374	1947513270	MAN
81502200375	1947513270	MAN
81502200378	151362	MAN

OE	JURID	
81502200380		MAN
81502200381	171602	MAN
81502200383	1728525050	MAN
81502200384	175830	MAN
81502200385	175690	MAN
81502200386		MAN
81502200387		MAN
81502200392	194753	MAN
81502200393	194753	MAN
81502200394	194743	MAN
81502200395	194743	MAN
81502200398	1947305380	MAN
81502200399	1947305380	MAN
81502200410	1768215380	MAN
81502200411	1768225380	MAN
81502200412	1768235380	MAN
81502200413	172853	MAN
81502200416	194731	MAN
81502200417	194731	MAN
81502200418	1949415380	MAN
81502200419	1949425380	MAN
81502200420	1949435380	MAN
81502200421	194732	MAN
81502200422	194732	MAN
81502200423	194752	MAN
81502200424	194752	MAN
81502200425	194710	MAN
81502200426	194710	MAN
81502200427	174102	MAN
81502200428	174102	MAN
81502200429		MAN
81502200430	175830	MAN
81502200431	175831	MAN
81502200432	175691	MAN
81502200433	172860	MAN
81502200434	171601	MAN
81502200435	1772815380	MAN
81502200436	1772815380	MAN
81502200438	1949515380	MAN
81502200439	1949415380	MAN
81502200441	1949525380	MAN
81502200442	1949535380	MAN
81502200454	1949425380	MAN
81502200455	1949435380	MAN
81502200459	1723815380	MAN
81502200464	172383	MAN
81502200465	1723825380	MAN
81502200466	1723815380	MAN
81502200467	172383	MAN
81502200468	1723825380	MAN
81502200469	1723815380	MAN
81502200473	177282	MAN
81502200474	177282	MAN
81502200475	171602	MAN
81502200476	172862	MAN
81502200477	175832	MAN
81502200478	175692	MAN
81502200479		MAN
81502200480		MAN
81502200481	1741015380	MAN
81502200482	1741015380	MAN
81502200483	194710	MAN
81502200484	194710	MAN
81502200485	1947513270	MAN
81502200486	1947513270	MAN
81502200487	194732	MAN
81502200488	194732	MAN

JURID / All rights reserved 2005

OE	JURID	
81502200504	1949415380	MAN
81502200505	1949515380	MAN
81502200515	1949425380	MAN
81502200516	1949435380	MAN
81502200517	1949415380	MAN
81502200519	1949425380	MAN
81502200520	1949435380	MAN
81502200521	1949535380	MAN
81502200522	1949525380	MAN
81502200524	1949505380	MAN
81502200532	1768215380	MAN
81502200533	1768225380	MAN
81502200534	1768235380	MAN
81502200535	1723815380	MAN
81502200536	1723825380	MAN
81502200537	172383	MAN
81502200538	1768215380	MAN
81502200539	1768225380	MAN
81502200540	1768235380	MAN
81502200541	1723815380	MAN
81502200542	1723825380	MAN
81502200543	172383	MAN
81502200544	1949415380	MAN
81502200545	1949425380	MAN
81502200546	1949435380	MAN
81502200547	1949405380	MAN
81502200550	1949405380	MAN
81502200551	1949505380	MAN
81502200560	1768205380	MAN
81502200561	1723805380	MAN
81502200562	1768205380	MAN
81502200563	1723805380	MAN
81502200564	1949405380	MAN
81502200565	1970705370	MAN
81502200566	1970715370	MAN
81502200567	1970725370	MAN
81502200568	1970605380	MAN
81502200569	1970615380	MAN
81502200570	1970625380	MAN
81502200574	175430	MAN
81502200575	175070	MAN
81502200591	1901915380	MAN
81502200594	194874	MAN
81502200595	194875	MAN
81502200596	194876	MAN
81502200597	1949535380	MAN
81502200606	1949415380	MAN
81502200607	1949425380	MAN
81502200608	1949435380	MAN
81502200611	1949405380	MAN
81502200619	1741015380	MAN
81502200620	1741015380	MAN
81502200621	194732	MAN
81502200622	194732	MAN
81502200629	1949415380	MAN
81502200630	1949425380	MAN
81502200631	1949435380	MAN
81502200632	1949605380	MAN
81502200633	1949625380	MAN
81502200634	1949635380	MAN
81502200641	1949415380	MAN
81502200642	1949425380	MAN
81502200643	1949435380	MAN
81502200644	1949615380	MAN
81502200645	1949625380	MAN
81502200646	1949635380	MAN
81502200647	1949615380	MAN

OE	JURID	
81502200648	1949625380	MAN
81502200649	1949635380	MAN
81502200650	1949415380	MAN
81502200651	1949425380	MAN
81502200652	1949435380	MAN
81502200653	1741015380	MAN
81502200654	1741015380	MAN
81502200655	194731	MAN
81502200656	194731	MAN
81502200658	1949405380	MAN
81502200659	1949605380	MAN
81502200660	1949615380	MAN
81502200661	1949605380	MAN
81502200662	1949605380	MAN
81502200663	1949605380	MAN
81502200664	1949505380	MAN
81502200665	1949505380	MAN
81502200666	1949525380	MAN
81502200667	1949535380	MAN
81502200668	174102	MAN
81502200669	174102	MAN
81502200670	194733	MAN
81502200671	194733	MAN
81502200672	174102	MAN
81502200673	174102	MAN
81502200674	194732	MAN
81502200675	194732	MAN
81502200682	1949525380	MAN
81502200683	1949535380	MAN
81502200684	1949415380	MAN
81502200685	1949425380	MAN
81502200686	1949435380	MAN
81502200697	1768225380	MAN
81502200698	1768235380	MAN
81502200699	1723825380	MAN
81502200700	172383	MAN
81502200701	1949425380	MAN
81502200702	1949435380	MAN
81502200703	1949425380	MAN
81502200704	1949435380	MAN
81502200705	1949425380	MAN
81502200706	1949435380	MAN
81502200707	1949425380	MAN
81502200708	1949435380	MAN
81502200709	1949425380	MAN
81502200710	1949435380	MAN
81502200711	1949525380	MAN
81502200712	1949535380	MAN
81502200713	1949625380	MAN
81502200714	1949635380	MAN
81502200715	1949625380	MAN
81502200716	1949635380	MAN
81502200717	1949625380	MAN
81502200718	1949635380	MAN
81502200719	1949505380	MAN
81502200720	1949515380	MAN
81502200721	175072	MAN
81502200722	175432	MAN
81502200756	1949525380	MAN
81502200757	1949535380	MAN
81502200758	1949525380	MAN
81502200759	1949535380	MAN
81502200760	1949405380	MAN
81502200761	1949425380	MAN
81502200762	1949435380	MAN
81502200763	1949515380	MAN
81502200766	1949415380	MAN

OE	JURID	
81502200769	1949515380	MAN
81502200770	1949525380	MAN
81502200771	1949535380	MAN
81502200772	1949415380	MAN
81502200775	1949405380	MAN
81502200776	1723815380	MAN
81502200783	1723815380	MAN
81502200903	1949525380	MAN
81502200907	1949515380	MAN
81502200908	1949505380	MAN
81502200910	1949535380	MAN
81502200911	1949605380	MAN
81502200912	1949615380	MAN
81502200913	1949605380	MAN
81502200914	1949625380	MAN
81502200915	1949635380	MAN
81502200916	1949615380	MAN
81502200917	1949605380	MAN
81502200918	1949625380	MAN
81502200919	1949635380	MAN
81502200923	1768215380	MAN
81502200926	1723815380	MAN
81502200929	1949415380	MAN
81502200971	1741015380	MAN
81502200972	1741015380	MAN
81502200994	1949415380	MAN
81502200995	1949405380	MAN
81502200996	1949425380	MAN
81502200997	1949435380	MAN
81502202000	170880	MAN
81502202001	170400	MAN
81502202012	191760	MAN
81502202017	191750	MAN
81502202022	171600	MAN
81502202031	190080	MAN
81502210002	1949615380	MAN
81502210003	1949605380	MAN
81502210004	1949625380	MAN
81502210005	1949635380	MAN
81502210006	1790003270	MAN
81502210007	1790003270	MAN
81502210008	1790013270	MAN
81502210009	1790003270	MAN
81502210010	1790013270	MAN
81502210011		MAN
81502210012	1581703320	MAN
81502210013	1581713320	MAN
81502210014	158172	MAN
81502210015	1581703320	MAN
81502210016	1581713320	MAN
81502210017	158172	MAN
81502210019	1947305380	MAN
81502210032	197740	MAN
81502210035	197760	MAN
81502210038	197730	MAN
81502210041	197750	MAN
81502210048	1768205380	MAN
81502210049	1768215380	MAN
81502210050	1768205380	MAN
81502210051	1768225380	MAN
81502210052	1768235380	MAN
81502210053	1723805380	MAN
81502210054	1723815380	MAN
81502210055	1723805380	MAN
81502210056	1723825380	MAN
81502210057	172383	MAN
81502210058	1949505380	MAN

JURID by Honeywell

© JURID / All rights reserved 2005

OE	JURID	
81502210059	**1949515380**	MAN
81502210060	**1949505380**	MAN
81502210061	**1949525380**	MAN
81502210062	**1949535380**	MAN
81502210147	**1949405050**	Mercedes
81502210147	**1949405380**	MAN
81502210148	**1949425380**	MAN
81502210160	**1949415380**	MAN
81502210162	**1949425380**	MAN
81502210163	**1949435380**	MAN
81502210165	**1949615380**	MAN
81502210167	**1949625380**	MAN
81502210168	**1949635380**	MAN
81502210175	**1949615380**	MAN
81502210181	**1949505380**	MAN
81502210214	**1949415380**	MAN
81502210215	**1949405380**	MAN
81502210216	**1949625380**	MAN
81502210217	**1949435380**	MAN
81502210218	**1949515380**	MAN
81502210219	**1949505380**	MAN
81502210220	**1949525380**	MAN
81502210221	**1949535380**	MAN
81502210222	**1949615380**	MAN
81502210223	**1949605380**	MAN
81502210224	**1949625380**	MAN
81502210225	**1949635380**	MAN
81502210235	**1970715370**	MAN
81502210236	**1970705370**	MAN
81502210275	**1970725370**	MAN
81502210276	**1970705370**	MAN
81502210276	**1970705370**	MAN
81502210277	**1970725370**	MAN
81502210314	**1768215380**	MAN
81502210315	**1768205380**	MAN
81502210316	**1768225380**	MAN
81502210317	**1768235380**	MAN
81502210318	**1723815380**	MAN
81502210319	**1723805380**	MAN
81502210320	**1723825380**	MAN
81502210321	**172383**	MAN
81502210394	**1970615370**	MAN
81502210395	**1970605370**	MAN
81502210399	**1970615370**	MAN
81502210414	**1949415380**	MAN
81502210415	**1949405380**	MAN
81502210416	**1949415380**	MAN
81502210417	**1949435380**	MAN
81502210419	**1949615380**	MAN
81502210420	**1949605380**	MAN
81502210421	**1949615380**	MAN
81502210421	**1949625380**	MAN
81502210422	**1949635380**	MAN
81502210430	**1723815380**	MAN
81502210430	**1723815380**	MAN
81502210431	**1723805380**	MAN
81502210432	**1723825380**	MAN
81502210432	**1723825380**	MAN
81502210433	**172383**	MAN
81502210435	**1949415380**	MAN
81502210435	**1949415380**	MAN
81502210435	**1949415380**	MAN
81502210436	**1949405380**	MAN
81502210436	**1949405380**	MAN
81502210437	**1949425380**	MAN
81502210438	**1949435380**	MAN
81502210438	**1949435380**	MAN

OE	JURID	
81502210440	**1949515380**	MAN
81502210441	**1949505380**	MAN
81502210441	**1949505380**	MAN
81502210442	**1949525380**	MAN
81502210443	**1949535380**	MAN
81502210443	**1949535380**	MAN
81502210445	**1949615380**	MAN
81502210446	**1949605380**	MAN
81502210447	**1949625380**	MAN
81502210448	**1949635380**	MAN
81502210450	**1949515380**	MAN
81502210466	**1970625370**	MAN
81502210470	**1970625370**	MAN
81502210484	**1949615380**	MAN
81502210485	**1949605380**	MAN
81502210488	**1970715370**	MAN
81502210492	**1970715370**	MAN
81502210493	**1970705370**	MAN
81502210515	**1723815380**	MAN
81502210516	**1723805380**	MAN
81502210517	**1723825380**	MAN
81502210518	**172383**	MAN
81502210520	**1949415380**	MAN
81502210521	**1949405380**	MAN
81502210522	**1949425380**	MAN
81502210523	**1949435380**	MAN
81502210525	**1949515380**	MAN
81502210526	**1949505380**	MAN
81502210527	**1949525380**	MAN
81502210528	**1949535380**	MAN
81502210530	**1949615380**	MAN
81502210531	**1949605380**	MAN
81502210532	**1949625380**	MAN
81502210533	**1949635380**	MAN
81502210535	**1970615450**	MAN
81502210536	**1970605450**	MAN
81502210537	**1970625450**	MAN
81502210538	**1949435380**	MAN
81502210538	**194943**	MAN
81502210540	**1949415380**	MAN
81502210541	**1970605450**	MAN
81502210542	**1970625450**	MAN
81502210543	**1949435380**	MAN
81502210545	**1970715450**	MAN
81502210546	**1970705450**	MAN
81502210547	**1970725450**	MAN
81502210548	**1949635380**	MAN
81502210548	**195813**	MAN
81502210548	**197073**	MAN
81502210550	**1970715450**	MAN
81502210551	**1970705450**	MAN
81502210552	**1970725450**	MAN
81502210553	**1949635380**	MAN
81502210581	**1798805380**	MAN
81502210584	**1587905380**	MAN
81502210585	**1587915380**	MAN
81502210586	**1798815380**	MAN
81502210587	**1798805380**	MAN
81502210589	**1798825380**	MAN
81502210591	**1949615380**	MAN
81502210596	**1949615050**	MAN
81502210611	**1949415380**	MAN
81502210613	**1723815380**	MAN
81502210614	**1949415380**	MAN
81502210623	**1949615380**	MAN
81502210625	**1949615380**	MAN
81502210634	**1723805380**	MAN

OE	JURID	
81502210635	**1723805380**	MAN
81502210636	**1723815380**	MAN
81502210637	**1723825380**	MAN
81502210639	**1949405380**	MAN
81502210640	**1949405380**	MAN
81502210641	**1949415380**	MAN
81502210642	**1949425380**	MAN
81502210644	**1949505380**	MAN
81502210645	**1949505380**	MAN
81502210646	**1949515380**	MAN
81502210647	**1949525380**	MAN
81502210649	**1949605380**	MAN
81502210650	**1949605380**	MAN
81502210651	**1949615380**	MAN
81502210652	**1949625380**	MAN
81502210654	**1970615380**	MAN
81502210655	**1970605380**	MAN
81502210656	**1970625380**	MAN
81502210657	**1970635450**	MAN
81502210659	**1970615450**	MAN
81502210660	**1970605380**	MAN
81502210661	**1970625380**	MAN
81502210662	**1970635450**	MAN
81502210664	**1970715380**	MAN
81502210665	**1970705380**	MAN
81502210666	**1970725380**	MAN
81502210667	**1970735450**	MAN
81502210669	**1970715380**	MAN
81502210670	**1970705380**	MAN
81502210671	**1970725380**	MAN
81502210672	**1970735450**	MAN
81502210673	**158799**	MAN
81502210674	**1798895380**	MAN
81502210675	**1701709580**	MAN
81502210676	**1917709580**	MAN
81502210698	**1768215380**	MAN
81502210700	**1768225380**	MAN
81502210701	**1768225380**	MAN
81502210702	**170740**	MAN
81502210703	**170730**	MAN
81502210704	**190130**	MAN
81502210705	**190140**	MAN
81502210706		MAN
81502210707		MAN
81502210708		MAN
81502210709		MAN
81502210711	**1970615380**	MAN
81502210712	**1970605380**	MAN
81502210713	**1970625380**	MAN
81502210714	**1970635450**	MAN
81502210716	**1970615380**	MAN
81502210717	**1970605380**	MAN
81502210718	**1970625380**	MAN
81502210719	**1970635450**	MAN
81502210721	**1970715380**	MAN
81502210722	**1970705380**	MAN
81502210723	**1970725380**	MAN
81502210724	**1970735450**	MAN
81502210726	**1970715380**	MAN
81502210727	**1970705380**	MAN
81502210728	**1970725380**	MAN
81502210729	**1970735450**	MAN
81502210734	**1587905380**	MAN
81502210735	**1587915380**	MAN
81502210736	**1798805380**	MAN
81502210737	**1798815380**	MAN
81502210738	**1701719580**	MAN

JURID / All rights reserved 2005

OE	JURID	
81502210739	170172	MAN
81502210740	1917719580	MAN
81502210741	191772	MAN
81502210743	1728505050	MAN
81502210744	1728515050	MAN
81502210745	151361	MAN
81502210746	172860	MAN
81502210747	177020	MAN
81502210748	177030	MAN
81502210749	1741015380	MAN
81502210750	1741015380	MAN
81502210751	172852	MAN
81502210752	172862	MAN
81502210753	174102	MAN
81502210754	174102	MAN
81502210755	171602	MAN
81502210756	172852	MAN
81502210757	195270	MAN
81502210758	195280	MAN
81502210759	175831	MAN
81502210760	175691	MAN
81502210761	172861	MAN
81502210762	171601	MAN
81502210763	1772805380	MAN
81502210764	1772805380	MAN
81502210768	1768205380	MAN
81502210770	1949515380	MAN
81502210771	1949505380	MAN
81502210772	1949525380	MAN
81502210773	1949535380	MAN
81502210778	1949415380	MAN
81502210779	1949515050	MAN
81502210780	1949615050	MAN
81502210781	1734005380	MAN
81502210782	1749705380	MAN
81502210785	1581703320	MAN
81502210786	1581713320	MAN
81502210787	158172	MAN
81502210788	1581703320	MAN
81502210789	1581713320	MAN
81502210790	158172	MAN
81502210791	1790003270	MAN
81502210792	1790003270	MAN
81502210793	1790013270	MAN
81502210794	1790003270	MAN
81502210795	1790003270	MAN
81502210796	1790013270	MAN
81502210803	1949415380	MAN
81502210803	1949415380	MAN
81502210804	1949405380	MAN
81502210805	1949425380	MAN
81502210806	1949435380	MAN
81502210808	1949515380	MAN
81502210809	1949505380	MAN
81502210810	1949525380	MAN
81502210811	1949535380	MAN
81502210813	1949615380	MAN
81502210813	1949615380	MAN
81502210814	1949605380	MAN
81502210815	1949625380	MAN
81502210816	1949635380	MAN
81502210817	1949615050	MAN
81502210820	1949615050	MAN
81502210821	1949415380	MAN
81502210822	1949515050	MAN
81502210823	1947513270	MAN
81502210824	1947513270	MAN

OE	JURID	
81502210878	1970605450	MAN
81502210883	1970605450	MAN
81502210887	1970715450	MAN
81502210888	1970705450	MAN
81502210888	1970705450	MAN
81502210892	1970715450	MAN
81502210893	1970705450	MAN
81502210897	1723815380	MAN
81502210898	1723805380	MAN
81502210899	1723825380	MAN
81502210900	172383	MAN
81502210902	1949415380	MAN
81502210903	1949405380	MAN
81502210904	1949425380	MAN
81502210905	1949435380	MAN
81502210907	1949515380	MAN
81502210908	1949505380	MAN
81502210909	1949525380	MAN
81502210910	1949535380	MAN
81502210912	1949615380	MAN
81502210913	1949605380	MAN
81502210914	1949625380	MAN
81502210915	1949635380	MAN
81502211001	1723815380	MAN
81502216013	1587905380	MAN
81502216014	1587915380	MAN
81502216015	158792	MAN
81502216016	1798805380	MAN
81502216017	1798815380	MAN
81502216018	1798825380	MAN
81502216031	1798805380	MAN
81502216032	1798815380	MAN
81502216033	1798825380	MAN
81502216034	1587905380	MAN
81502216035	1587915380	MAN
81502216036	158792	MAN
81502216037	1701709580	MAN
81502216038	1701719580	MAN
81502216039	170172	MAN
81502216040	1917709580	MAN
81502216041	1917719580	MAN
81502216042	191772	MAN
81502216071	1970803270	MAN
81502216073	1723805380	MAN
81502216074	1723815380	MAN
81502216075	1723825380	MAN
81502216077	1949505380	MAN
81502216078	1949515380	MAN
81502216079	1949525380	MAN
81502216081	1949605380	MAN
81502216082	1949615380	MAN
81502216083	1949625380	MAN
81502216084	194963	MAN
81502216085	1949405380	MAN
81502216086	1949415380	MAN
81502216087	1949425380	MAN
81502216088	197133	MAN
81508046028	2905503010	MAN
81508205006	2903005390	MAN
81508205007	2903005390	MAN
81508205011	2908803010	MAN
81508205011	2908809560	MAN
81508205012	2905603010	MAN
81508205017	2909305390	MAN
81508205020	2903004230	MAN
81508205022	2908809560	MAN
81508205023	2908809560	MAN

OE	JURID	
81508205024	2908809560	MAN
81508205025	2908809560	MAN
81508205029	2908809560	MAN
81508205030	2908809560	MAN
81508205035	2909305390	MAN
81508205039	2903004230	MAN
81508205040	2903004230	MAN
81508205047	2903004230	MAN
81508205072	2913109560	MAN
81508206000	2903004230	MAN
81508206001	2905305390	MAN
81508206002	2903004230	MAN
81508206004	2903005390	MAN
81508206006	2908809560	MAN
81508206007	2908809560	MAN
81508206008	2909305390	MAN
81508206009	2905503010	MAN
81508206014	2903005390	MAN
81508206016	2903004230	MAN
81508206020	2908803010	MAN
81508206020	2908809560	MAN
81508206021	2909103010	MAN
81508206021	2908809560	MAN
81508206022	2909305390	MAN
81508206025	2903004230	MAN
81508206031	2903004230	MAN
81508206036	2903004230	MAN
81508206041	2913109560	MAN
81508206044	2903004230	MAN
81508206046	2903004230	MAN
81508226011	587019J	MAN
81508226012	587021J	MAN
81508226013	587023J	MAN
81508226014	587022J	MAN
81508226016	587019J	MAN
82000005487	173980	MAN
82000013760	192540	MAN
82134000	2910815390	NEOPLAN
82135100	2910815390	NEOPLAN
82135100	2910815390	Neoplan
8241016237	1909404040	Kassbohrer
8241028316	1737704040	Kassbohrer
8241030335	1910324040	Kassbohrer
8241037393	1939704040	Kassbohrer
8241060716	1910204040	Kassbohrer
8241060718	1910204040	Kassbohrer
82419996870	1957404040	Kassbohrer
8241999721	1995203290	Kassbohrer
8241999722	1995203290	Kassbohrer
8241999733	1903204040	Kassbohrer
8241999734	1903214040	Kassbohrer
8241999735	1909404040	Kassbohrer
8241999736	1909414040	Kassbohrer
8243000607	1963405380	Kassbohrer
8243000610	1963405380	Kassbohrer
8281981520	1908405380	Kassbohrer
8282000052	1515005380	Kassbohrer
8282000053	1517405380	Kassbohrer
8282000054	1709205460	Kassbohrer
8282000055	1709205460	Kassbohrer
8282000060	1515025380	Kassbohrer
8282000101	1524705380	Kassbohrer
8282000133	1517425380	Kassbohrer
8282000161	1726905380	Kassbohrer
8282000162	1726905380	Kassbohrer
8282000223	1916604040	Kassbohrer
8282000224	1916604040	Kassbohrer

JURID by Honeywell

© JURID / All rights reserved 2005



OE	JURID	
8282000228	**1727505380**	Kassbohrer
8282000430	**1724805380**	Kassbohrer
8282000464	**172692**	Kassbohrer
8282000465	**172692**	Kassbohrer
8282000491	**1740805380**	Kassbohrer
8282000500	**1901915380**	Kassbohrer
8282000509	**1740835380**	Kassbohrer
8282000513	**173390**	Kassbohrer
8282000537	**173392**	Kassbohrer
8282000539	**1740815380**	Kassbohrer
8282000540	**173391**	Kassbohrer
8282000556	**1738903270**	Kassbohrer
8282000567	**191341**	Kassbohrer
8282000568	**192980**	Kassbohrer
8282000656		Kassbohrer
8282000680	**157430**	Kassbohrer
8282000681	**1774215380**	Kassbohrer
8282000684	**1774205380**	Kassbohrer
8282000685	**1774205380**	Kassbohrer
8282000686	**1907615380**	Kassbohrer
8282000687	**1907615380**	Kassbohrer
8282000688	**1907605380**	Kassbohrer
8282000689	**1907605380**	Kassbohrer
8282000727	**1774205380**	Kassbohrer
8282000728	**1774205380**	Kassbohrer
8282000729	**1907605380**	Kassbohrer
8282000730	**1907605380**	Kassbohrer
8282000738	**1724805380**	Kassbohrer
8282000739	**1724815380**	Kassbohrer
8282000740	**172482**	Kassbohrer
8282000751	**1775903270**	Kassbohrer
8282000752	**1775803270**	Kassbohrer
8282000797	**1734005380**	Kassbohrer
8282000802	**1734015380**	Kassbohrer
8282000803	**173402**	Kassbohrer
8282000814	**1724815380**	Kassbohrer
8282000815	**173402**	Kassbohrer
8282000816	**1774205380**	Kassbohrer
8282000817	**1774205380**	Kassbohrer
8282000818	**1907625380**	Kassbohrer
8282000819	**1907625380**	Kassbohrer
8282000820	**1727515380**	Kassbohrer
8282000821	**172752**	Kassbohrer
8282000822	**173391**	Kassbohrer
8282000823	**173392**	Kassbohrer
8282000824	**173891**	Kassbohrer
8282000825	**173892**	Kassbohrer
8282000826	**1775813270**	Kassbohrer
8282000827	**177582**	Kassbohrer
8282000847	**1788205380**	Kassbohrer
8282000848	**1788215380**	Kassbohrer
8282000849	**178822**	Kassbohrer
8282000850	**1788105050**	Kassbohrer
8282000851	**1788115050**	Kassbohrer
8282000852	**178812**	Kassbohrer
82820009560	**172700**	Kassbohrer
82820009570	**nicht lieferbar**	Kassbohrer
82820009580	**1724805380**	Kassbohrer
82820009610	**1740815380**	Kassbohrer
82820009620	**173391**	Kassbohrer
82820009630	**173891**	Kassbohrer
82820009640	**1724815380**	Kassbohrer
82820009650	**1775835380**	Kassbohrer
82820009660	**1734015380**	Kassbohrer
82820009700	**1740805380**	Kassbohrer
82820009710	**1775833270**	Kassbohrer
82820009710	**1775835380**	Kassbohrer



OE	JURID	
82820009730	**1734005380**	Kassbohrer
82820009780	**1740805380**	Kassbohrer
82820009790	**1733905380**	Kassbohrer
82820009830	**1727505380**	Kassbohrer
8283000010	**1728505050**	Kassbohrer
8283000011	**1728515050**	Kassbohrer
8283000034	**1728515050**	Kassbohrer
8283000071	**192980**	Kassbohrer
8283000072	**191340**	Kassbohrer
8283000103	**191340**	Kassbohrer
8283000105	**171220**	Kassbohrer
8283000106	**171222**	Kassbohrer
8283000116	**191692**	Kassbohrer
8283000117	**190470**	Kassbohrer
8283000118	**190480**	Kassbohrer
8283000124	**191350**	Kassbohrer
8283000127	**191340**	Kassbohrer
8283000128	**191341**	Kassbohrer
8283000144	**192420**	Kassbohrer
8283000145	**192410**	Kassbohrer
8283000146	**190950**	Kassbohrer
8283000147	**190960**	Kassbohrer
8283000148	**190952**	Kassbohrer
8283000149	**190962**	Kassbohrer
8283000152	**170160**	Kassbohrer
8283000154	**170161**	Kassbohrer
8283000156	**1711504040**	Kassbohrer
8283000157	**190470**	Kassbohrer
8283000158	**190480**	Kassbohrer
8283000159	**190472**	Kassbohrer
8283000160	**190482**	Kassbohrer
8283000161	**1726905380**	Kassbohrer
8283000162	**1726905380**	Kassbohrer
8283000163	**1916804040**	Kassbohrer
8283000164	**1916804040**	Kassbohrer
8283000165	**191683**	Kassbohrer
8283000175	**1916614040**	Kassbohrer
8283000176	**1916604040**	Kassbohrer
8283000183	**1901905380**	Kassbohrer
8283000184	**176510**	Kassbohrer
8283000185	**192420**	Kassbohrer
8283000186	**192410**	Kassbohrer
8283000187	**192422**	Kassbohrer
8283000188	**192412**	Kassbohrer
8283000189	**192420**	Kassbohrer
8283000190	**192410**	Kassbohrer
8283000191	**192422**	Kassbohrer
8283000192	**192412**	Kassbohrer
8283000193	**190070**	Kassbohrer
8283000195	**190072**	Kassbohrer
8283000197	**190070**	Kassbohrer
8283000198	**190072**	Kassbohrer
8283000200	**190220**	Kassbohrer
8283000201	**190230**	Kassbohrer
8283000202	**190222**	Kassbohrer
8283000203	**190232**	Kassbohrer
8283000208	**172940**	Kassbohrer
8283000209	**172942**	Kassbohrer
8283000210	**172940**	Kassbohrer
8283000211	**172942**	Kassbohrer
8283000212	**171100**	Kassbohrer
8283000213	**171102**	Kassbohrer
8283000216	**155162**	Kassbohrer
8283000218	**155160**	Kassbohrer
8283000221	**176520**	Kassbohrer
8283000222	**192422**	Kassbohrer
8283000223	**192412**	Kassbohrer



OE	JURID	
8283000224	**1901925380**	Kassbohrer
8283000260	**171960**	Kassbohrer
8283000283	**1910304040**	Kassbohrer
8283000299	**1901915380**	Kassbohrer
8283000314	**1916614040**	Kassbohrer
8283000315	**1916604040**	Kassbohrer
8283000338	**195660**	Kassbohrer
8283000346	**1956804040**	Kassbohrer
8283000347	**1910304040**	Kassbohrer
8283000352	**1916604040**	Kassbohrer
8283000353	**1916604040**	Kassbohrer
8283000502	**1907615380**	Kassbohrer
8283000504	**1907615380**	Kassbohrer
8283000506	**1774215380**	Kassbohrer
8283000508	**1774215380**	Kassbohrer
8283000567	**191341**	Kassbohrer
8283000568	**192981**	Kassbohrer
8283000579	**1907605380**	Kassbohrer
8283000580	**1907605380**	Kassbohrer
8283000583	**1916604040**	Kassbohrer
8283000584	**1916604040**	Kassbohrer
8283000607	**1963405380**	Kassbohrer
8283000608	**1963415380**	Kassbohrer
8283000609	**1963425380**	Kassbohrer
8283000610	**1963405380**	Kassbohrer
8283000611	**1963415380**	Kassbohrer
8283000612	**1963425380**	Kassbohrer
8283000613	**1963405380**	Kassbohrer
8283000614	**1963415380**	Kassbohrer
8283000615	**1963405380**	Kassbohrer
8283000617	**1963425380**	Kassbohrer
8283000618	**1963425380**	Kassbohrer
8283000649	**1900405380**	Kassbohrer
8283000650	**1900415450**	Kassbohrer
8283000651	**1900405450**	Kassbohrer
8283000652	**1900425380**	Kassbohrer
8283000660		Kassbohrer
8283000661		Kassbohrer
8283000665	**1774205380**	Kassbohrer
8283000666	**1774205380**	Kassbohrer
8283000667	**1774215380**	Kassbohrer
8283000668	**1774215380**	Kassbohrer
8283000669	**1963405450**	Kassbohrer
8283000670	**1963405450**	Kassbohrer
8283000671	**1963415380**	Kassbohrer
8283000672	**1963415450**	Kassbohrer
8283000673	**1907605380**	Kassbohrer
8283000674	**1907605380**	Kassbohrer
8283000675	**1907615380**	Kassbohrer
8283000676	**1907615380**	Kassbohrer
8283000677	**1900405450**	Kassbohrer
8283000678	**1900405450**	Kassbohrer
8283000679	**1900415450**	Kassbohrer
8283000680	**1900415450**	Kassbohrer
8283000692	**1788105050**	Kassbohrer
8283000693	**1788115050**	Kassbohrer
8283000694	**1788205380**	Kassbohrer
8283000695	**1788215380**	Kassbohrer
8283000769	**1916604040**	Kassbohrer
8283000770	**1916604040**	Kassbohrer
82830008070	**1916694040**	Kassbohrer
82840000570	**720250 qual 730**	Kassbohrer
82840001960	**2949805440**	Kassbohrer
8284000207	**2968805440**	Evobus
82840002070	**2968805440**	Kassbohrer
82840002080	**2978205440**	Kassbohrer
8284000209	**2974705440**	Evobus

OE/JURID

JURID / All rights reserved 2005

JURID by Honeywell

OE	JURID	
82840002090	**2974705440**	Kassbohrer
82840002090	**2974705440**	Kassbohrer
82840002090	**2974705440**	Kassbohrer
8284000210	**2996905440**	Evobus
82840002100	**2974705440**	Kassbohrer
8284000223	**2900805440**	Evobus
82840002230	**2900805440**	Kassbohrer
8284000224	**2901505440**	Evobus
82840002240	**2901505440**	Kassbohrer
8284058203	**2949805440**	Evobus
82840582030	**2949805440**	Kassbohrer
82840582030	**2949805440**	Kassbohrer
8284058204	**2958205440**	Evobus
82840582040	**2958205440**	Kassbohrer
82850001600	**1963415380**	Kassbohrer
82850001610	**1963415380**	Kassbohrer
82850001620	**1963405380**	Kassbohrer
82850001630	**1963405380**	Kassbohrer
82850001640	**1907605380**	Kassbohrer
82850001650	**1907605380**	Kassbohrer
82850001660	**1907615380**	Kassbohrer
82850001670	**1907615380**	Kassbohrer
82850001680	**1900405380**	Kassbohrer
82850001690	**1900415380**	Kassbohrer
82850001700	**1900405380**	Kassbohrer
82850001710	**1900415380**	Kassbohrer
82850002160	**1900435450**	Kassbohrer
82850002180	**1900435450**	Kassbohrer
82850002270	**1916604040**	Kassbohrer
82850002280	**1916604040**	Kassbohrer
82850002350	**2974705440**	Kassbohrer
82850002360	**2996905440**	Kassbohrer
82850002410	**1916614040**	Kassbohrer
82850002420	**1916614040**	Kassbohrer
82850002430	**1916624040**	Kassbohrer
82850002440	**1916624040**	Kassbohrer
82850002700	**1963425380**	Kassbohrer
82850002720	**1907625380**	Kassbohrer
82850002730	**1907625380**	Kassbohrer
82850003160	**1900445380**	Kassbohrer
82850003170	**1900445380**	Kassbohrer
82850003210	**1901915380**	Kassbohrer
82850003220	**1788205380**	Kassbohrer
82850003230	**1788215380**	Kassbohrer
82850003250	**1901905380**	Kassbohrer
82850003350	**1788105380**	Kassbohrer
82850003360	**1788115380**	Kassbohrer
8285000571	**2910815390**	Evobus
82850005710	**2910815390**	Kassbohrer
82850006400	**1956804040**	Kassbohrer
82850570350		Kassbohrer
82850570360		Kassbohrer
82850793490	**1774205380**	Kassbohrer
82850793500	**1774205380**	Kassbohrer
82850793510	**1774215380**	Kassbohrer
82850793520	**1774215380**	Kassbohrer
82850793530	**177422**	Kassbohrer
82850793540	**177422**	Kassbohrer
82851941200	**1774205380**	Kassbohrer
82851941210	**1774205380**	Kassbohrer
82851941220	**1774215380**	Kassbohrer
82851941230	**1774215380**	Kassbohrer
82851961100	**1907405380**	Kassbohrer
82851961110	**1907405380**	Kassbohrer
82851961120	**1907415380**	Kassbohrer
82851961130	**1907415380**	Kassbohrer
82851962940	**1907425450**	Kassbohrer
82851962950	**1907425380**	Kassbohrer
82851981520	**1908405380**	Kassbohrer
82851981520	**1908405380**	Kassbohrer
82851981530	**1908405380**	Kassbohrer
82851981530	**1985505380**	Kassbohrer
82851981540	**1908415380**	Kassbohrer
82851981540	**1908415380**	Kassbohrer
82851981550	**1908415380**	Kassbohrer
82851981550	**1985515380**	Kassbohrer
82851982980	**198552**	Kassbohrer
82851982990	**198562**	Kassbohrer
82852001150	**1969905380**	Kassbohrer
82852001160	**1969905380**	Kassbohrer
82852001170	**1969915380**	Kassbohrer
82852001180	**1969915380**	Kassbohrer
82852003020	**1969925380**	Kassbohrer
82852003030	**1969925380**	Kassbohrer
82852322190	**1907405450**	Kassbohrer
82852322200	**1907415450**	Kassbohrer
82852322210	**1984905450**	Kassbohrer
82852322220	**1984915450**	Kassbohrer
82852322960	**1907425450**	Kassbohrer
82852322970	**1907425450**	Kassbohrer
82852323140	**1907415450**	Kassbohrer
82852325190	**1907405450**	Kassbohrer
82852325200	**1907415450**	Kassbohrer
82852325210	**1907425450**	Kassbohrer
82852325220	**1969905450**	Kassbohrer
82852325220	**1969915450**	MAN
82852325230	**1969915450**	Kassbohrer
82852325230	**1969905450**	MAN
82852325240	**1969925450**	Kassbohrer
82852325240	**1969925450**	MAN
82852325250	**1900405450**	Kassbohrer
82852325260	**1900415450**	Kassbohrer
82852325270	**1900435380**	Kassbohrer
82852362230	**1969905450**	Kassbohrer
82852362240	**1969915450**	Kassbohrer
82852362250	**1969905450**	Kassbohrer
82852362260	**1969915450**	Kassbohrer
82852363000	**1969925450**	Kassbohrer
82852363120	**1969915380**	Kassbohrer
82852363130	**1969915450**	Kassbohrer
82853453690	**1969905450**	Kassbohrer
82853453700	**1969905450**	Kassbohrer
82853453710	**1969925450**	Kassbohrer
82853453720	**1969925450**	Kassbohrer
82853503730	**1969905450**	Kassbohrer
82853503740	**1969905450**	Kassbohrer
82853503750	**1907425450**	Kassbohrer
82853503760	**1907425450**	Kassbohrer
8285388435	**2903005390**	Kassbohrer
8285388436	**2905305390**	Evobus
8285388533	**2903005390**	Kassbohrer
82854084630	**2903005390**	Kassbohrer
82854084630	**2903005390**	MAN
8285408464	**2905305390**	Evobus
82854084640	**2905305390**	Kassbohrer
82854084640	**2905305390**	MAN
82854085320	**2905305390**	MAN
8285408534	**2903005390**	Evobus
82854085340	**2903005390**	Kassbohrer
82854085340	**2903005390**	MAN
82855066020	**1969925380**	Kassbohrer
82855066040	**1969915380**	Kassbohrer
82855066040	**1969915450**	MAN
82855066060	**1969905380**	Kassbohrer
82855086010	**1969925450**	Kassbohrer
82855086030	**1969915450**	Kassbohrer
82855086050	**1969905450**	Kassbohrer
82855155540	**2910815390**	Kassbohrer
82855155730	**2910815390**	Kassbohrer
848082	**1906905700**	DAF
848083	**1906905700**	DAF
8539218	**1515005380**	Iveco
8544456	**1740805380**	Iveco
8544643	**1515005380**	Iveco
8548327	**1705005380**	Iveco
8548328	**1705005380**	Iveco
8550611	**2909003010**	Volvo
8550611	**2909005390**	Volvo
8550611	**2909005391**	Volvo
8550611	**2909005392**	Volvo
8552780	**1515005380**	Iveco
8556775	**1779203320**	Iveco
8556776	**1779203320**	Iveco
8559394	**1740805380**	Iveco
8559549	**1779203320**	Iveco
8559550	**1779203320**	Iveco
8561859	**1573205380**	Iveco
8561860	**1573215380**	Iveco
8561862	**1573215380**	Iveco
8561863	**1573215380**	Iveco
8561865	**1776405380**	Iveco
8561866	**1776415380**	Iveco
8561868	**1740805380**	Iveco
8561869	**1740815380**	Iveco
8561871	**1709403320**	Iveco
8561872	**1709413320**	Iveco
8561877	**1778105380**	Iveco
8561881	**1778115380**	Iveco
8561883	**1778105380**	Iveco
8561884	**1778115380**	Iveco
85735	**1902405700**	DAF
85735	**1902405700**	DAF
85736	**1902405700**	DAF
85736	**1902405700**	DAF
86340032	**1709205460**	Steyr
86340033	**1709205460**	Steyr
870609700	**1724703320**	RVI
870609900	**1750003320**	RVI
87407	**2912005390**	Haldex
8751120143	**1530404210**	Magirus
8751120148	**1521505380**	Magirus
87511203116	**1724805380**	Magirus
87511203117	**1727505380**	Magirus
87511203138	**1724815380**	Magirus
87511203151	**1709403320**	Magirus
8751120413	**170942**	Magirus
8751120503	**1709413320**	Magirus
8751120511	**1724815380**	Magirus
8751120512	**1727515380**	Magirus
8751120513	**1709403320**	Magirus
8751120514	**1724815380**	Magirus
87511801167	**1709205380**	Magirus
87511801168	**1709205380**	Magirus
8751180232	**1530605460**	Magirus
87511803149	**1726905380**	Magirus
8751180337	**1726905380**	Magirus
8751180338	**1726905380**	Magirus
8751180362	**1726905380**	Magirus
8751180363	**1726905380**	Magirus
8751180414	**1705005380**	Magirus
8751180422	**1705025380**	Magirus

JURID by Honeywell

© JURID / All rights reserved 2005



OE	JURID	
8751180514	**1705015380**	Magirus
8751180517	**1726915380**	Magirus
8751180518	**1726915380**	Magirus
8751180522	**1705015380**	Magirus
8751180531	**1915313270**	Magirus
8751180543	**1915313270**	Magirus
8751180544	**1915313270**	Magirus
8751180643	**1915313270**	Magirus
8803050	**1976203290**	SAE
8803051	**1976203290**	SAE
8804167	**1976013290**	SAE
8804168	**1976013290**	SAE
8804177	**1989214040**	SAF / Sauer
8804178	**1989214040**	SAF / Sauer
8804181	**1909414040**	SAE
880440033	**1924505450**	Steyr
8808125	**1789713290**	SAE
8808135	**1789713290**	SAE
8809165	**1976213290**	SAE
8809175	**1976213290**	SAE
8809205	**1989214040**	SAF / Sauer
8809215	**1989214040**	SAF / Sauer
8809285	**1909424040**	SAE
88502010217	**171080**	MAN
88502010221	**170720**	MAN
88502200004	**191860**	MAN
88502200006		MAN
88502200008		MAN
88502200020	**190202**	MAN
88502200021	**191861**	MAN
88502200023	**1949415380**	MAN
88502200024	**1949615450**	MAN
8850220-0024	**1949615450**	MAN
88502200036	**1949405450**	MAN
88502200037	**1949425380**	MAN
88502200038	**1949435380**	MAN
88502200040	**1949605450**	MAN
8850220-0040	**1949605450**	MAN
88502200041	**1949625380**	MAN
88502200042	**1949635380**	MAN
88502200044	**1970615450**	MAN
88502200044	**1970615450**	MAN
88502200045	**1970605450**	MAN
88502200046	**1970625450**	MAN
88502200047	**1949435380**	MAN
88502200049	**1970615450**	MAN
88502200049	**1970615450**	MAN
88502200050	**1949405380**	MAN
88502200050	**1970605450**	MAN
88502200051	**1970625450**	MAN
88502200052	**1949435380**	MAN
88502200054	**1970715450**	MAN
88502200054	**1970715450**	MAN
88502200055	**1970705450**	MAN
88502200056	**1949625380**	MAN
88502200056	**1970725450**	MAN
88502200057	**1949635380**	MAN
88502200059	**1970715450**	MAN
88502200059	**1970715450**	MAN
88502200060	**1970705450**	MAN
88502200061	**1970725450**	MAN
88502200062	**1949635380**	MAN
88502200064	**1970605380**	MAN
88502200065	**1970615380**	MAN
88502200066	**1970625380**	MAN
88502200068	**1970605380**	MAN
88502200069	**1970615380**	MAN



OE	JURID	
88502200070	**1970625380**	MAN
88502200072	**1970705380**	MAN
88502200073	**1970715380**	MAN
88502200074	**1970725380**	MAN
88502200076	**1970705380**	MAN
88502200077	**1970715380**	MAN
88502200078	**1970725380**	MAN
88502200200	**190200**	MAN
88502200201	**170900**	MAN
88502200202	**191860**	MAN
88502200203		MAN
88502200204	**172240**	MAN
88502200205	**170080**	MAN
88502200208	**171080**	MAN
88502200210	**171061**	MAN
88502200212	**171250**	MAN
88502200213	**170900**	MAN
88502200214	**190200**	MAN
88502200218	**190200**	MAN
88502200220	**172080**	MAN
88502200221	**170900**	MAN
88502200222	**190202**	MAN
88502200223	**171062**	MAN
88502200224		MAN
88502200226		MAN
88502200227		MAN
88502200229	**171060**	MAN
88502200231	**172080**	MAN
893082	**1906905700**	DAF
893082	**1906905700**	DAF
893083	**1906905700**	DAF
893083	**1906905700**	DAF
9014210110	**2907604530**	Mercedes
90800200164	**1734005380**	MAN
90800200165	**192110**	MAN
90800200166	**192150**	MAN
90800200167	**1727515380**	MAN
90800200168	**1726915380**	MAN
90800200169	**1726915380**	MAN
90800200172	**172860**	MAN
90810524290	**170530**	MAN
90810744297	**1901905380**	MAN
90810744879	**1705005380**	MAN
90810744883	**1727505380**	MAN
90810744884	**1727505380**	MAN
90810744887	**1726905380**	MAN
90810744889	**1726905380**	MAN
90810744892	**191640**	MAN
90810744893	**1727505380**	MAN
90810744896	**1705005380**	MAN
90810744897	**1901905380**	MAN
90810744960	**1726905380**	MAN
90810745532	**1727505380**	MAN
90810745537	**1738903270**	MAN
90810745538	**173891**	MAN
90810745539	**1901915380**	MAN
9104120	**1789703290**	SAE
9104130	**1789703290**	SAE
9104140	**1976003290**	SAE
9104150	**1976003290**	SAE
9104160	**1976203290**	SAE
9104170	**1976203290**	SAE
9104200	**1989204040**	SAF / Sauer
9104210	**1989204040**	SAF / Sauer
9104280	**1909404040**	SAE
9291001	**1903214040**	SAE
9291004	**1957494040**	SAE



OE	JURID	
9291007	**1990214040**	SAE
9291008	**1990214040**	SAE
9291024	**2909305390**	SAE
9291026	**1903204040**	SAE
9291028	**1957494040**	SAE
9291032	**1990204040**	SAE
9291035	**1990204040**	SAE
9291037	**2910815390**	SAE
9291045	**2911509100**	SAE
9291048	**2911509100**	SAE
9291049	**2911509100**	SAE
93161314	**2907503341**	IVECO
93161314	**2907503341**	Iveco
943331052	**1528203320**	RVI
943331052	**1528203320**	RVI
943331076	**1965703270**	RVI
943331076	**1965703270**	RVI
943332009	**1724703320**	RVI
943332009	**1724703320**	RVI
943332010	**1750003320**	RVI
943332010	**1750003320**	RVI
9596972	**1573205380**	Iveco
9596973	**1573205380**	Iveco
9596974	**1740805380**	Iveco
9596975	**1776405380**	Iveco
96000004401	**8162080001**	TEXTAR
96000004501	**8162080002**	TEXTAR
96000004601	**8162080003**	TEXTAR
96208015001	**8102080005**	TEXTAR
96208015001	**8102080027**	TEXTAR
96208015001	**8102080028**	TEXTAR
96208018001	**8102080010**	TEXTAR
96208018001	**8102080026**	TEXTAR
96208020001	**8102080014**	TEXTAR
980102930	**2909305390**	BPW
986467841	**571272J**	BOSCH
99000330025	**1924605450**	Steyr
99000340025	**1924615450**	Steyr
99000340068	**1924605450**	Steyr
99000340069	**1924615450**	Steyr
99000440002	**1924515450**	Steyr
99000440022	**1978215370**	Steyr
99000440027	**1978205370**	Steyr
99000440029	**1924505450**	Steyr
99000440030	**1924515450**	Steyr
9921061	**1530304210**	Iveco
9931210	**1907203320**	Iveco
A0004236510	**571946J**	Mercedes
A0014201520	**2983505440**	Mercedes
A0024204920	**2910815390**	Mercedes
A0024205720	**2911509100**	Mercedes
A0024206220	**2983505440**	Mercedes
A0034200120	**571946J**	Mercedes
A0034201020	**2910815390**	Evobus
A0034201520	**2983505440**	Mercedes
A0034203520 T7400	**2910815390**	Evobus
A0034208420	**2903005390**	Evobus
A0034214310 T7400	**2903005390**	Evobus
A1918204027	**1918205380**	Mercedes
A3024211310	**1710505380**	HANDAMG
A3024211310	**1710515380**	Mercedes
A3024211410	**1710515380**	HANDAMG
A3024211410	**1710515380**	Mercedes
A3024235910	**1918205380**	HANDAMG
A3024235910	**1918205380**	Mercedes
A3024236010	**1918215380**	HANDAMG
A3024236010	**1918215380**	Mercedes

JURID / All rights reserved 2005

OE	JURID	
A3024236110	**1918225380**	HANDAMG
A3024236110	**1918225380**	Mercedes
A3094214110	**1534905460**	HANDAMG
A3094214110	**1534905460**	Mercedes
A3094214210	**1534915460**	HANDAMG
A3094214210	**1534915460**	Mercedes
A3094214310	**1534925460**	HANDAMG
A3094214310	**1534925460**	Mercedes
A3094214510	**1534905460**	HANDAMG
A3094214510	**1534905460**	Mercedes
A3094214610	**1534915460**	HANDAMG
A3094214610	**1534915460**	Mercedes
A3094214710	**1534925460**	HANDAMG
A3094214710	**1534995460**	Mercedes
A3094214810	**1534995460**	HANDAMG
A3094214810	**1534995460**	Mercedes
A3094215210	**1558005460**	HANDAMG
A3094215210	**1558005460**	Mercedes
A3094215310	**1558015460**	Mercedes
A3094215510	**1558005460**	HANDAMG
A3094215510	**1558005460**	Mercedes
A3094215710	**1558025460**	Mercedes
A3104213610	**1558035460**	HANDAMG
A3104213610	**1558035460**	Mercedes
A3104213710	**1558045460**	HANDAMG
A3104213710	**1558045460**	Mercedes
A3104213810	**1558055460**	Mercedes
A3104214010	**1558035460**	HANDAMG
A3104214010	**1558035460**	Mercedes
A3104214110	**1558045460**	HANDAMG
A3104214110	**1558045460**	Mercedes
A3104214210	**1558055460**	HANDAMG
A3104214210	**1558055460**	Mercedes
A3104214310	**1558025460**	Mercedes
A3144210510	**1505705380**	Mercedes
A3164211810	**1740905380**	Mercedes
A3164211910	**1740915380**	Mercedes
A3164212010	**1740925380**	Mercedes
A3164212110	**1740905380**	Mercedes
A3184211410	**1740945380**	Mercedes
A3184211710	**1740935380**	Mercedes
A3194213810	**1558055460**	HANDAMG
A3434211810	**1728505050**	Mercedes
A3434211910	**1728515050**	Mercedes
A3434231210	**1916005050**	Mercedes
A3434231310	**1916015050**	Mercedes
A3434231410	**1916025050**	Mercedes
A3494210910	**1727605050**	Mercedes
A3494211010	**1727615050**	Mercedes
A3494211110	**172762**	Mercedes
A3574230710	**1970615450**	Mercedes
A3574231010	**1970615450**	Mercedes
A3574231110	**1970625450**	Mercedes
A3574231310	**1970715450**	Mercedes
A3574231410	**1970725450**	Mercedes
A3574231610	**1970715450**	Mercedes
A3574231710	**1970725450**	Mercedes
A3574233510	**1970715450**	Kassbohrer
A3574234110	**1970615380**	Mercedes
A3574234210	**1970625380**	Mercedes
A3574234410	**1970615380**	Mercedes
A3574234510	**1970625380**	Mercedes
A6014231710	**1101905460**	Mercedes
A6014231810	**1101915460**	Mercedes
A6014231910	**1101925460**	Mercedes
A6024231710	**1302005460**	Mercedes
A6024231810	**1302015460**	Mercedes

OE	JURID	
A6024231910	**1302025460**	Mercedes
A6024232010	**1302035460**	Mercedes
A6024232310	**1302025460**	Mercedes
A6024233510	**1302005460**	Mercedes
A6024233610	**1302015460**	Mercedes
A6024233710	**1302025460**	Mercedes
A6024233810	**1302035460**	Mercedes
A6114231010	**1503005460**	Mercedes
A6114231110	**1503025460**	Mercedes
A6114231210	**1503025460**	Mercedes
A6174210010	**1773905380**	Mercedes
A6174210410	**1768205380**	Mercedes
A6174210510	**1768215380**	Mercedes
A6174210710	**1768235380**	Mercedes
A6174230910	**1723805050**	Mercedes
A6174231010	**1723815050**	Mercedes
A6174231110	**1723825050**	Mercedes
A6174231310	**1949405380**	Mercedes
A6174231410	**1949415380**	Mercedes
A6174231510	**1949425380**	Mercedes
A6174231610	**1949435380**	Mercedes
A6174231710	**1949505380**	Mercedes
A6174231810	**1949515380**	Mercedes
A6174234210	**1949515050**	Mercedes
A6174238110	**1949625380**	Mercedes
A6174238410	**1723815050**	Mercedes
A6174238710	**1949405050**	Mercedes
A6174238810	**1949415050**	Mercedes
A6174238910	**1949425050**	Mercedes
A6174239010	**1949435050**	Mercedes
A6174239110	**1949505050**	Mercedes
A6174239210	**1949515050**	Mercedes
A6174239310	**1949525050**	Mercedes
A6174239410	**1949535050**	Mercedes
A6174239510	**1949605050**	Mercedes
A6174239610	**1949615050**	Mercedes
A6174239710	**1949625050**	Mercedes
A6174239810	**1949635380**	Mercedes
A6594230008	**1949515050**	Mercedes
A6594230910	**1949515050**	Mercedes
A6594231710	**1949515050**	Mercedes
A6594232120	**1949615050**	Mercedes
A6674230110	**1503025460**	Mercedes
A6674230210	**1503025460**	Mercedes
A6674232210	**1503005460**	Mercedes
A6674232310	**1503025460**	Mercedes
A6684230010	**1735115460**	Mercedes
A6684230110	**1735115460**	Mercedes
A6684230210	**1735125460**	Mercedes
A6684230410	**1735115460**	Mercedes
A6684230510	**1735115460**	Mercedes
A6684231610	**1505915460**	Mercedes
A6684231710	**1505915460**	Mercedes
A6684232010	**1505915460**	Mercedes
A6684232110	**1505915460**	Mercedes
A6684232510	**1735115460**	Mercedes
A6684232610	**1735115460**	Mercedes
A6684232710	**1735125460**	Mercedes
A6684233310	**1505915460**	Mercedes
A6684233410	**1505915460**	Mercedes
A6694200020	**2983505440**	Mercedes
A6694200120	**2983505440**	Mercedes
A6694210108	**2983505440**	Mercedes
A6704202820	**2983505440**	Mercedes
A6734213310	**1516215380**	Mercedes
A6734213510	**1516235380**	Mercedes
A6734213610	**1516205380**	Mercedes

OE	JURID	
A6734216310	**1728045380**	Mercedes
A6734216510	**1728065380**	Mercedes
A6734216630	**1727805380**	Mercedes
A6734216710	**1727845380**	Mercedes
A6734216730	**1727815380**	Mercedes
A6734216810	**1727855380**	Mercedes
A6734216830	**1727825380**	Mercedes
A6734216930	**1727835380**	Mercedes
A6734217030	**1728005380**	Mercedes
A6734217130	**1728015380**	Mercedes
A6734217230	**1728025380**	Mercedes
A6734217330	**1728035380**	Mercedes
A6734217430	**1728705380**	Mercedes
A6734217530	**1728715380**	Mercedes
A6734217630	**1728725380**	Mercedes
A6734217730	**1728735380**	Mercedes
A6744210410	**1950625380**	Mercedes
A6744216110	**1950615380**	Mercedes
A6744216210	**1950615380**	Mercedes
A6744216310	**1950625380**	Mercedes
A6744216410	**1950625380**	Mercedes
A6744216510	**1950635380**	Mercedes
A6744216610	**1950635380**	Mercedes
A6744216710	**1950605380**	Mercedes
A6744216810	**1950605380**	Mercedes
A6744217310	**1950615450**	Mercedes
A6744217410	**1950615450**	Mercedes
A6744217510	**1950625380**	Mercedes
A6744217610	**1950625380**	Mercedes
A6744217810	**1950635450**	Mercedes
A6744217910	**1950605450**	Mercedes
A6744218010	**1950605450**	Mercedes
A6744230410	**1729015380**	Mercedes
A6744230610	**1729035380**	Mercedes
A6754213830	**1729045380**	Mercedes
A6754213910	**1729045380**	Mercedes
A6754214010	**1729045380**	Mercedes
A6754214710	**1950645380**	Mercedes
A6754214810	**1950645380**	Mercedes
A7701004485	**1749715380**	MAN
A7701008387	**1774403320**	MAN
A7701009212	**1774413320**	MAN
B157E102	**1128504210**	Perrot
B157E104	**1128504210**	Perrot
B157E106	**1530605460**	Perrot
B157E108	**1320305460**	Perrot
B157E110	**1128405360**	Perrot
B157E112	**1530504210**	Perrot
B157E116	**1128604210**	Perrot
B157E137	**1705005380**	Perrot
B157E138	**1705005380**	Perrot
B157E153	**1709205460**	Perrot
B157E154	**1709205460**	Perrot
B157E156	**1709403320**	Perrot
B157E175	**1530204210**	Perrot
B157E176	**1530304210**	Perrot
B157E182	**1129005380**	Perrot
B157E183	**1515005380**	Perrot
B157E184	**1517405380**	Perrot
B157E189	**1320501160**	Perrot
B157E190	**1320501160**	Perrot
B157E196	**1727505380**	Perrot
B157E207	**1726905380**	Perrot
B157E208	**1726905380**	Perrot
B157E234	**1530405360**	Perrot
B157E252	**1521505380**	Perrot
B157E253	**1525605350**	Perrot

JURID by Honeywell

© JURID / All rights reserved 2005

OE	JURID	
B157E277	**1724805380**	Perrot
B157E280	**1128905360**	Perrot
B157E288	**1917035460**	Perrot
B313743	**1782715380**	Bendix
B313745	**1962005380**	DAF
B313746	**1962005380**	DAF
B333344	**2901104240**	Bendix
B342383NA	**2983505440**	Bendix
B342468NA	**2902409561**	Bendix
B342495NA	**2907203341**	Bendix
B342496NA	**2907203341**	Bendix
B342497NA	**2907503341**	Bendix
B342498NA	**2901303371**	Bendix
B342499NA	**2906709560**	Bendix
B342500NA	**2904303381**	Bendix
B342501	**2904403331**	Bendix
B342502NA	**2974705440**	Bendix
B342503NA	**2968805440**	Bendix
B342504NA	**2949805440**	Bendix
B342505NA	**2903204240**	Bendix
B342506NA	**2903005390**	Bendix
B342507NA	**2901104240**	Bendix
B342508NA	**2900805440**	Bendix
B346677	**1962015380**	Bendix
B346686	**1962015380**	Bendix
B346691	**1782715380**	Bendix
B346692	**1782715380**	Bendix
B346703	**1783115380**	Bendix
B346708	**1783115380**	Bendix
B346713	**1782915380**	Bendix
B346714	**1782915380**	Bendix
B348220	**2901104240**	Bendix
B376703	**1783115380**	Bendix
B5585324	**1503005460**	Pagid
B5585324	**1574205460**	Pagid
BBU 8177	**2907705390**	DAF
BBU8177	**2907705390**	DAF
BC/37/1	**1909404040**	Ferodo
BL1411A2	**571272J**	FTE
BP287D	**571272J**	Quinton Hazell
CVP013	**2903004230**	DON
CVP013	**2903005390**	DON
CVP020	**2910815390**	DON
DB20	**2912005390**	Haldex
E5145180601	**1705005380**	Magirus
E5145180621	**1705005380**	Magirus
FCV	**571272J**	Ferodo
FCV1047	**2903005392**	FERODO
FCV594	**2974705440**	Ferodo
FCV702	**2903903342**	FERODO
FCV733	**2906709560**	FERODO
FCV760	**2903004230**	FERODO
FCV760	**2903004230**	Ferodo
FCV760	**2903005390**	Ferodo
FCV760	**2903005392**	FERODO
FCV7603422	**2903004230**	Ferodo
FCV7603422	**2903005390**	Ferodo
FCV769	**2904303381**	FERODO
FCV773	**2901104240**	FERODO
FCV988	**2904215390**	FERODO
FCV988	**2910815390**	FERODO
FDB1306	**571950J-AS**	Ferodo
G6398	**2903903342**	ABEX
G6487	**2906709560**	ABEX
G6500	**2904303381**	ABEX
G6502	**2901104240**	ABEX
G6517	**2903004230**	ABEX

OE	JURID	
G6517	**2903005392**	ABEX
G6644	**2903005392**	ABEX
G6686	**2904215390**	ABEX
G6686	**2910815390**	ABEX
GDB1067	**571272J**	LUCAS
GDB1399	**571950J-AS**	Lucas
II 18022	**2910815390**	Knorr
II 180220062	**2910815390**	KNORR
II 18375	**2910815390**	Knorr
II 30677	**2909305390**	Knorr
II 31021	**2911509100**	Knorr
II 31988	**2910815390**	Knorr
II 32940	**2910815390**	Knorr
II 32955	**2903204240**	Knorr
II 32957	**2901104240**	Knorr
II 32983	**2909305390**	Knorr
II 32994	**2909305390**	Knorr
II 33971	**2910815390**	Knorr
II 33976	**2910815390**	Knorr
II 33980	**2910815390**	Knorr
II 34902	**2910815390**	Knorr
II 34939	**2910815390**	Knorr
II 34944	**2910815390**	Knorr
II 34945	**2910815390**	Knorr
II 34947	**2910815390**	Knorr
II 37631	**2910815390**	Knorr
II 37658	**2909305390**	Knorr
II 37780	**2909305390**	Knorr
II 37832	**2910815390**	Knorr
II 38027	**2909305390**	Knorr
II 38157	**2911509100**	Knorr
II 38354	**2909305390**	Knorr
II 388863F	**2910815390**	Knorr
II 39098	**2901104240**	Knorr
II16022	**2910815390**	KNORR
II31988	**2910815390**	KNORR
M100934	**2910815390**	Fruehauf
T1170	**571950J-AS**	Pagid
VL/74/1	**1956001820**	Ferodo
VL/75/1	**1956001820**	Ferodo
VL701	**1766401820**	Volvo
VL711	**1766401820**	Volvo
VL721	**1946701820**	Volvo
VL731	**1946711820**	Volvo
VL741	**1956001820**	Volvo
VL751	**1956001820**	Volvo
VL81	**1979905450**	Volvo
VL82	**1979905450**	Volvo
VL831	**1988509530**	Volvo
VL841	**1988509530**	Volvo
VL851	**1799201820**	Volvo
VL861	**1994101820**	Volvo
VL871	**1993801820**	Volvo
VL881	**1993901820**	Volvo
VL891	**1994001820**	Volvo

OE	JURID	

JURID / All rights reserved 2005

OE	JURID
0004200172	567108J
0299095	567115J
0308834020	569022J
0308834030	569123J
0308834060	569022J
0308835010	569021J
0308835030	569020J
0501313313	567110J
0543541	567133J
080161600	567803J
080162100	567802J
082133310	567800J
1238372	567115J
13162006	567132J
13162025	569100J
1386686	567500J
1402272	567500J
172241111302	567109J
179241111131	567113J
179241111307	567112J
1904528	561612J
1904529	561127J
1904531	561360J
1904532	561342J
1904532	569124J
1904533	567119J
1904534	567120J
1904535	567131J
1904692	569107J
1904693	567124J
1906438	567135J
1906461	567135J
1907527	567116J
1907528	567127J
1907530	567116J
1907568	567125J
1907569	567126J
1907631	567117J
1907726	567116J
1907764	567130J
1907920	567119J
1908614	567117J
1908729	567117J
1908772	567118J
1908773	567128J
2001637	567953J
204566	567110J
21224263	567575J
21225115	567957J
251407617G	561437J
281615283	561109J
281615283A	561308J
281615283B	561308J
299095	567115J
2991646	569105J
2D0615301A	567760J
2D0615301B	567760J
2D0615301B	569122J
2D0615601	567771J
2D0615601A	567761J
2D0615601B	567810J
2D0615601C	569120J
2D0615601D	569121J
3112965-0	567152J
31788700100	567957J
3218H1308	567575J
3564210312	567555J
3564211012	567555J
4079000300	569000J
4079000400	569002J
4079000500	569001J
4079000700	569109J
4164210412	567141J
4174210012	567142J

OE	JURID
42034658	567131J
42037120	567119J
42063700	567130J
42470836	569104J
42470842	567118J
42471034	569106J
42471111	567128J
4254210012	567140J
4354210712	567805J
4374210212	567808J
4374210412	567806J
4404210012	567144J
4404210112	567144J
5000396612	567948J
5000450158	567949J
5000545242	567949J
5000790539	567951J
5000792539	567952J
5001092	567132
500306590	569104J
5010019249	567950J
5010190865	567950J
5010207431	567950J
5010216433	567954J
5010216437	567953J
5010216548	567952J
5010216931	567955J
5010216932	567956J
5010260101	567955J
5010260102	567956J
5010260218	567958J
5010260603	569102J
5010260604	569101J
5010260609	569103J
5010422262	569115J
5010422263	569116J
5010422363	569113J
5010422364	569114J
5010422593	567953J
5010525014	569119J
5010525015	569117J
5010525308	569115J
5010525362	569117J
5010525364	569118J
6014200072	561135J
6014200172	561854J
6014200272	561135J
6014200372	561854J
6014210312	561854J
6014210412	561135J
6014210512	561854J
6014215012	561135J
6014215112	561135J
6172906	567121J
6231000870	567809J
6274210012	567809J
6314200172	567145J
6314200372	561577J
6384210112	562054J
6384230112	562065J
6684210112	567770J
6684210212	567762J
6684230112	569112J
6684230412	567769J
6684230512	567763J
6694210112	561639J
6694210512	567776J
6694210612	561639J
6694210712	567776J
6704210012	561754J
6704210112	561754J
6704210312	561754J
6774686-7	561920J
6775223	567114J

OE	JURID
6775227	567114J
6775227-9	567114J
6779205	561919J
6779208	561919J
6779209	567150J
6796864	567151J
68320820	567110J
7168368	561342J
7168368	569124J
7171255	561849J
7171274	561342J
7171274	569124J
7172018	567116J
7172882	567126J
7172930	567125J
7173036	567127J
7173317	567117J
7179778	567135J
7180256	567128J
7182299	569105J
7182300	569106J
7182305	567135J
8124117	567120J
81508030009	567400J
81508030010	567401J
81508030014	567400J
81508030020	567403J
81508030021	567406J
81508030022	567405J
81508030023	567404J
81508030026	567402J
81508030027	567403J
81508030028	567407J
81508030031	567404J
81508030038	567408J
81508030039	569108J
81508030040	567409J
81508030041	567410J
8284000034	567111J
8285390000	567110J
8285472000	567108J
8285543000	567108J
8582290	561612J
8584182	561360J
9014210312	567760J
9014230412	567771J
9014230612	567771J
9014230812	569120J
9024210312	567760J
9024210412	567760J
9024210612	567760J
9024210712	567760J
9024210712	569122J
9024230112	567761J
9024230312	567761J
9024230412	569121J
9044230212	567810J
9044230312	567810J
93161407	567134J
93800492	561127J
93821867	567118J
93821918	561360J
93821918	567118J
93902471BS	567809J
9424211212	567751J
9424212112	567751J
9704210112	567764J
9704230212	569108J
9704230412	567768J
9704230512	567767J
9704230612	567768J
9704230712	567767J
9754210012	567766J
9754210112	567766J

OE	JURID
9754230312	567765J
AMB860	567812J
AMPA014	567812J
AMPB481	567812J
E908472	567802J
II 250810	567111J
II 30418	567764J
II 30676	567766J
II 30677	567765J
II 350103	567112J
II 350991	567109J
II 351096	567803J
II 351605	567113J
II 37191	567801J
II 37653	567800J
II 39098	567117J
II351032	567802J
II39085F	567950J
K351032	567802J
M069018	569100J
M078157	569110J
MAK2487	567123J
MAK7429	567122J
MAK7529	567122J
NJK2785	567812J
PAK3545	567122J
PAK3546	567123J
PAK5513	567122J
RAK7404	567122J
X1857658	567560J
X2057948	567560J
Z001634	569102J
Z001635	569101J
Z001636	569103J

JURID by Honeywell

© JURID / All rights reserved 2005

JURID/WVA/BFMC

JURID / All rights reserved 2005

JURID / All rights reserved 2005

JURID	WVA1	BFMC1	WVA2	BFMC2
1011604210	10116			
1019105980	10191	DK/31/1		
1101905460	11582	MB/90/1	11019	MB/91/2
1108204210	11082	GL/11/1		
1108401160	11084	BC/51/1		
1110701160	11107			
1118505380	11185			
1126805870	11268	VN/7/1		
1128205300	11282	TP/1/1		
1128404210	11284	BW/1/1		
1128405360	11284	BW/1/1		
1128505351	11285	BW/6/1		
1128604210	11286			
1128905360	11289			
1129005380	11290			
1129505360	11295	NU/6/1		
1149805360	11498			
1153405800	11534			
1155603320	11556			
1302005460	13532	MB/88/1	13020	MB/89/2
1314105910	13141	DK/17/1		
1318905910	13189	OP/20/1		
1319305870	13193			
1320204210	13202			
1320301030	13203			
1320305460	13203			
1320501160	13205		13206	
1321201160	13212			
1324004210	13240			
1325005360	13250			
1327909530	13279	GG/70/1		
1346403320	13464	SA/15/1	13465	SA/16/1
1351300	13513	GG/172		
1351605876	13193	VN/14/1	13516	VN/18/1
1500405380	15004	BC/52/1		
1503005460	15742	MB/80/1	15030	MB/81/3
1504404210	15044	FD/85/1		
1505705380	15057	MB/64/1		
1505905460	15869	MB/107/1	15059	MB/108/2
1510403320	15104	RN/58/1	15107	RN/57/1
1515005380	15150	BC/62/1	15174	BC/63/1
1516205380	15162	MB/116/2	15836	MB/116/1
1516235380	15162	MB/116/2	15836	MB/116/1
1516305460	15163			
1517405380	15174	BC/63/1		
1519205300	15192			
1519305300	15193			
1520709580	15207	FI/79/1		
1521505380	15215	MB/22/1		
1524705380	15247	FD/86/1		
1525303320	15253	SA/21/1	15254	SA/20/1
1525605350	15256			
1528009530	15280	BO/38/1	15281	BO/37/1
1528203320	15282	BT/48/1		
1528705360	15287			
1530003320	15300	MB/62/1		
1530204210	15302		15303	
1530404210	15304			
1530405360	15304			

JURID	WVA1	BFMC1	WVA2	BFMC2
1530605460	15306	SY/2/2		
1533603320	15336	FI/80/1		
1534004210	15340			
1534909530	15349	MB/70/1	15350	MB/69/1
1534995460	15349	MB/70/1	15350	MB/69/1
1541905380	15419			
1549409530	15494	FI/84/1		
1550505350	15505			
1554409530	15544	GG/95/1		
1555803320	15558	FI/80/1		
1558005460	15580	MB/94/1	15581	MB/95/1
1558035460	1558020	MB/94/1	1558021	MB/95/1
1569803320	15698	SA/14/1		
1572805460	15728			
1573205380	15732	FI/101/1	15733	FI/100/1
1574005910	15740		11025	
1575104040	15751			
1577505380	15775	VN/19/1		
1578909530	15789	GG/171/1		
1581403320	15814	FI/118/1	15843	FI/117
1581409530	15814	FI/118/1	15843	FI/117
1581703320	15817	MP/37/1	15823	MP/38/1
1581709580	15817	MP/37/1	15823	MP/38/1
1585409530	15854	AT/32		
1585709530	15857		15858	
1586009530	15860		15862	
1587905380	15879	GG/209/1		
1587909580	15879	GG/209/1		
1701205700	17012	DF/40/1	17013	DF/41/1
1701709580	17017	GG/217/1		
1705005380	17050	MF/1/1	17051	MF/2/1
1709205460	17092	SY/8/1	17093	SY/9/1
1709403320	17094	SY/7/1		
1709603270	17096	PB/23/1	17099	PB/26/1
1710505380	17105	MB/65/1		
1710509530	17105	MB/65/1		
1711504040	17115	BC/39/1		
1712015380	17120		17138	
1713505460	17135			
1716101230	17161	SV/26/1		
1716109530	17161	SV/26/1		
1716109580	17161	SV/26/1		
1722909530	17229	BO/39/1	17230	BO/40/1
1723805050	17238	MP/30/2		
1723805380	17238	MP/30/2		
1724405380	17244	PD/2/1		
1724703320	17247	SA/8/1	17305	SA/9/1
1724805380	17248	BC/32/2		
1725935380	17259	MB/56/1		
1726305700	17263	DF/22/2	17264	DF/23/2
1726905380	17269	BC/32/1	17270	BC/33/1
1726909530	17269	BC/32/1	17270	BC/33/1
1727205460	17272	BC/48/1		
1727505380	17275	KM/10/1		
1727601820	17276	MB/60/1		
1727605050	17276	MB/60/1		
1727805380	17278	MB/109/2	17927	MB/109/1
1727835380	17278	MB/109/2	17927	MB/109/1
1728005380	17280	MB/110/2	17928	MB/110/1

JURID	WVA1	BFMC1	WVA2	BFMC2
1728035380	17280	MB/110/2	17928	MB/110/1
1728505050	17285	BC/2/1		
1728595380	17285	BC/2/1		
1728705380	17287	MB/115/2	17929	MB/115/1
1728735380	17287	MB/115/2	17929	MB/115/1
1729005380	17290	MB/111/2	17949	MB/111/1
1729035380	17290	MB/111/2	17949	MB/111/1
1729705380	17297	MB/67/1		
1729805380	17298	MB/68/1		
1730603270	17306	BT/56/1	17309	BT/57/1
1730703320	17307	BT/54/1	17308	BT/55/1
1731609530	17316	FD/121/1		
1732303320	17323	FI/81/1		
1732405700	17324	DF/15/3	17325	DF/14/3
1733903320	17339			
1734005380	17340	BC/77/1		
1735005460	17973	MB/100/1	17350	MB/101/2
1735105460	17975	MB/117/1	17351	MB/118/2
1737704040	17377	BC/78/1		
1738305700	17383	DF/10/3	17384	DF/11/3
1738903270	17389	KM/12/1		
1740801820	17408	FI/104/1		
1740805380	17408	FI/104/1		
1740925380	17409	MB/93/1		
1740995380	17409	MB/93/1		
1741005380	17410	MP/34/1	17411	MP/35/1
1741015380	1741008	MP/34/1	1741108	MP/35/1
1745609550	17456			
1748203320	17482	FI/94/1		
1749705380	17497	BT/52/1	17498	BT/53/1
1750003320	17500	SA/17/1	17506	SA/18/1
1752603320	17526	UM/26/-		
17530	17530	BT/57/1	17531	BT/56/1
1754609580	17546	GG/118/1		
1755503320	17555	GG/144/1		
1758203320	17582	SA/24/1	17805	BT/53/1
1758903320	17589			
1759203290	17592			
1761203320	17612			
1763503320	17635	SY/20/2	17636	SY/26/1
1763509530	17635	SY/20/2	17636	SY/26/1
1766401820	17664	VL/71/1	17665	VL/70/1
1766409530	17664	VL/71/1	17665	VL/70/1
1768205380	17682	MP/29/1		
1768209530	17682	MP/29/1		
1768301230	17238	MP/30/2		
1768309530	17238	MP/30/2		
1769209530	17692	FI/97/1		
1773905380	17739			
1773909530	17739			
1774205380	17742	PB/9/1	17743	PB/10/1
1774403320	17744			
1775803270	17758	MF/24/1		
1775805380	17758	MF/24/1		
1775903270	17759	MF/24/1		
1776003290	17760			
1776405380	17764	OM/12/1	17408	FI/102/1
1778105380	17781	FI/109/1	17782	FI/108/1
1778305460	17783		17784	

JURID / All rights reserved 2005

JURID	WVA1	BFMC1	WVA2	BFMC2
1779203320	17792	FI/108/1	17794	FI/109/1
1779505380	17795	MB/83/1	17796	MB/82/1
1779709550	17797			
1780401820	17804	DO/80/2		
1780709550	17807			
1780815460	1780810		1781510	
1782703320	17827	SA/28/1	17828	SA/29/1
1782705380	17827	SA/28/1	17828	SA/29/1
1782709530	17827	SA/28/1	17828	SA/29/1
1782903320	17829	BT/76/1	17830	SA/25/1
1782905380	17829	BT/76/1	17830	SA/25/1
1782909530	17827	SA/28/1	17828	SA/29/1
1782909530	17829	BT/76/1	17830	SA/25/1
1783103320	17831	SA/27/1	17832	SA/26/1
1783105380	17831	SA/27/1	17832	SA/26/1
1783203270	17832	SA/26/1		
1786909530	17869	FI/105/1		
1787903320	17879	FI/126/1	17880	FI/125/1
1788105050	17881			
1788205380	17882			
1788503320	17885	FI/113/1		
1788509530	17885	FI/113/1		
1788835450	1788830			
1789703290	17897		17898	
1790003270	17900	MP/39/1	17901	MP/40/1
1790009580	17900	MP/39/1	17901	MP/40/1
1790509550	17905		17906	
1790805380	17908			
1791505380	17915			
1792403320	17924	FI/120/1	17925	FI/121/1
1792409530	17924	FI/120/1	17925	FI/121/1
1793209530	17932	GG/187/1	17933	GG/186/1
1793800	17938			
1794009530	17940	LH/94/1		
1795209530	17952			
1795309530	17953			
1795709530	17957			
1796309530	17963	DO/86/1	17964	DO/85/1
1797105450	17971	PD/5/1	17972	PD/6/1
1797109580	17971	PD/5/1	17972	PD/6/1
1798805380	17988	GG/210/1		
1799101820	17991	SV/39/2		
1799201820	17992	VL/85/1		
1813400	18134		18135	
1900405380	19004	PB/32/2	19743	PB/32/1
1900405450	19004	PB/32/2	19743	PB/32/1
1900435380	19004	PB/32/2	19743	PB/32/1
1900435450	19004	PB/32/2	19743	PB/32/1
1900545380	19005	BC/41/1		
1901001230	19010	DF/45/1	19011	DF/44/1
1901005700	19010	DF/45/1	19011	DF/44/1
1901009530	19010	DF/45/1	19011	DF/44/1
1901905380	19019	BC/61/1		
1902405700	19024	DF/42/1	19031	DF/43/1
1903201250	19032	BC/98/1		
1903204040	19032	BC/98/1		
1903209550	19032	BC/98/1		
1903209580	19032	BC/98/1		
1903601230	19036	RW/5/4	19037	RW/6/4
1903601232	19036	IL/66/3	19037	IL/67/3
1903604040	19036	RW/5/4	19037	RW/6/4
1903604042	19036	IL/66/3	19037	IL/67/3
1903609550	19036	RW/5/4	19037	RW/6/4
1903609552	19036	IL/66/3	19037	IL/67/3
1903609553	19036	IL/66/3	19037	IL/67/3
1903609555	19036	RW/34/1	19037	RW/35/1
1903609580	19036	RW/5/4	19037	RW/6/4
1904903270	19049	SA/10/1	19199	SA/11/1
1904903280	19049	SA/10/1	19199	SA/11/1
1904904040	19049	SA/10/1	19199	SA/11/1
1905205700	19052	DF/46/1	19055	DF/47/1
1905209530	19052	DF/46/1	19055	DF/47/1
1906301230	19063	DF/48/1	19064	DF/49/1
1906305700	19063	DF/48/1	19064	DF/49/1
1906309530	19063	DF/48/1	19064	DF/49/1
1906801230	19068	VL/89/2		
1906903270	19069	DF/50/1	19077	DF/51/1
1906905700	19069	DF/50/1	19077	DF/51/1
1907101230	19071	VL/88/1		
1907101230	19071	VL/88/2		
1907203320	19072	GG/83/1		
1907209530	19072	GG/83/1		
1907405380	19074	PB/17/2	19850	PB/16/1
1907405450	19074	PB/17/2	19850	PB/16/1
1907501230	19075	SV/8/1		
1907501820	19075	SV/8/1		
1907509530	19075	SV/8/1		
1907509580	19075	SV/8/1		
1907605380	19076	PB/11/2	19559	PB/12/1
1907605450	19076	PB/11/2	19559	PB/12/1
1907825380	19078	MB/120/1	19112	MB/121/1
1908405380	19084	PB/29/2	19856	PB/30/1
1908405450	19084	PB/29/2	19856	PB/30/1
1909001230	19090	VL/87/2		
1909103270	19091		19098	
1909401250	19094	BC/97/1		
1909404040	19094	BC/97/1		
1909409550	19094	BC/97/1		
1909409580	19094	BC/97/1		
1909903270	19262	PB/25/1	19342	PB/25/2
1910204040	19102	BC/54/1		
1910304040	19103	BC/55/1		
1911109530	19111	GG/92/1		
1911405380	19114		19115	
1911709550	19117	DF/20/1	19118	DF/21/1
1912505450	19125	MB/61/1		
1913315450	1913310			
1915005700	19150	DF/20/3	19151	DF/21/3
1915009530	19150	DF/20/3	19151	DF/21/3
1915303270	19153	MF/14/1	19154	MF/13/1
1916005050	19160	MB/51/1		
1916009530	19160	MB/51/1		
1916604040	19166	BC/90/1	19167	BC/91/1
1916804040	19168	BC/92/1	19169	BC/93/1
1917035460	19170			
1917701230	19177	GG/218/1		
1917709580	19177	GG/218/1		
1918205380	19182	MB/66/1		
1918701230	19187	RN/104/1		
1918703270	19187	RN/104/1		
1918703280	19187	RN/104/1		
1918709550	19187	RN/104/1		
1919405050	19194			
1920004040	19200	BC/35/1		
1923505450	19235			
1923605450	19236			
1924505370	19245	SY/23/1	19782	
1924505450	19245	SY/23/1	19782	
1924605380	19246	SY/24/1		
1924605450	19246	SY/24/1		
1925503270	19255	RN/102/1	19259	RN/103/1
1925601230	19256	DF/16/1	19260	DF/17/2
1925605700	19256	DF/16/1	19260	DF/17/2
1925609530	19256	DF/16/1	19260	DF/17/2
1925609580	19256	DF/16/1	19260	DF/17/2
1926205380	19262	PB/25/1	19342	PB/25/2
1926209530	19262	PB/25/1	19342	PB/25/2
1926305380	19263	PB/24/1	19343	PB/24/2
1926309530	19263	PB/24/1	19343	PB/24/2
1926903270	19269	GG/208/1	19272	GG/207/1
1928304040	19283	SJ/28/1	19284	SJ/29/1
1928394040	19283	SJ/28/1	19284	SJ/29/1
1931503270	19315	SA/32/1	19319	SA/33/1
1933309550	19333	YK/7/2	19334	YK/6/2
1933803290	19338	FT/5/1		
1934503270	19345	UM/24/-		
1935703290	19357		19358	
1935903290	19359		19360	
1936501230	19365	RW/2/1	19366	RW/1/1
1936504040	19365	RW/2/1	19366	RW/1/1
1936504042	19365	RW/2/5	19366	RW/1/5
1936509550	19365	RW/2/1	19366	RW/1/1
1936509552	19365	RW/2/5	19366	RW/1/5
1936509580	19365	RW/2/1	19366	RW/1/1
1936509582	19365	RW/2/5	19366	RW/1/5
1936703290	19367		19368	
1936904040	19369	FU/4/2	19370	FU/5/2
1937129530	19371	GG/142/1		
1938501230	19384	CW/4/1	19385	CW/4/2
1938505380	19384	CW/4/1	19385	CW/4/2
1938505380	19384	CW/4/1	19385	CW/4/2
1938509530	19384	CW/4/1	19385	CW/4/2
1938509580	19384	CW/4/1	19385	CW/4/2
1939301230	19393	SV/27/1		
1939303270	19393	SV/27/1		
1939309530	19393	SV/27/1		
1939309580	19393	SV/27/1		
1939605380	19396			
1939704040	19397			
1940103290	19401	SJ/36/1		
1940503290	19405			
1940603290	19406	LF/102/1	19407	LF/103/1
1944403290	19444			
1944905380	19449	HJ/20/1	19450	HJ/21/1
1946109550	19461	YK/9/3	19462	YK/8/3
1946605450	19466	MB/58/3		
1946701230	19467	VL/73/1	19468	VL/72/1

JURID by Honeywell

© JURID / All rights reserved 2005

JURID	WVA1	BFMC1	WVA2	BFMC2
1946701820	19467	VL/73/1	19468	VL/72/1
1946709530	19467	VL/73/1	19468	VL/72/1
1946709580	19467	VL/73/1	19468	VL/72/1
1947305380	19473	MP/25/1	19747	MP/26/1
1947513270	1947508	MP/27/1	1947608	MP/28/1
1947703290	19477	SJ/30/1	19478	SJ/31/1
1947903290	19479	LF/100/1	19480	LF/101/1
1949003290	19490	SJ/34/1	19491	SJ/35/1
1949209580	19492	RW/24/1		
1949401230	19494	MP/31/2		
1949405050	19494	MP/31/2		
1949405370	19494	MP/31/2		
1949405380	19494	MP/31/2		
1949405450	19494	MP/31/2		
1949409530	19494	MP/31/2		
1949409580	19494	MP/31/2		
1949501230	19495	MP/32/2		
1949505050	19495	MP/32/2		
1949505380	19495	MP/32/2		
1949505450	19495	MP/32/2		
1949509530	19495	MP/32/2		
1949509580	19495	MP/32/2		
1949515390	19495	MP/32/2		
1949601230	19496	MP/36/2		
1949605050	19496	MP/36/2		
1949605380	19496	MP/36/2		
1949605450	19496	MP/36/2		
1949609530	19496	MP/36/2		
1949609580	19496	MP/36/2		
1949615390	19496	MP/36/2		
1950200	19502			
1950302320	19503			
1950303320	19503	CW/3/1		
1950309580	19503	CW/3/1		
1950405380	19504	GG/213/1		
1950605380	19506	MB/114/2	19844	MB/113/1
1950605450	19506	MB/114/2	19844	MB/113/1
1950625380	19506	MB/114/2	19844	MB/113/1
1950625450	19506	MB/114/2	19844	MB/113/1
1951103270	19511	LF/104/1	19512	LF/105/1
1951504040	19515	SJ/23/1	19516	SJ/22/1
1951704040	19517	SJ/25/1	19518	SJ/24/1
1954209580	19542	RW/25/1		
1954301230	19543	GG/214/1	19552	GG/215/1
1954309580	19543	GG/214/1	19552	GG/215/1
1954403290	19544			
1955301230	19553	RW/28/1	19554	RW/28/2
1955303270	19553	RW/29/1	19716	RW/33/1
1955309530	19553	RW/28/1	19554	RW/28/2
1955509530	19555	RW/29/1	19556	RW/29/2
1955603270	19556	RW/28/1	19714	RW/31/1
1955701230	19557	FT/7/1	19606	FT/6/1
1955704040	19557	FT/7/1	19606	FT/6/1
1955709550	19557	FT/7/1	19606	FT/6/1
1955709580	19557	FT/7/1	19606	FT/6/1
1955809530	19076	PB/11/2	19559	PB/12/1
1956009530	19560	VL/74/1	19561	VL/75/1
1956201230	19562	VL/76/1	19563	VL/77/1
1956205450	19562	VL/76/1	19563	VL/77/1

JURID	WVA1	BFMC1	WVA2	BFMC2
1956209530	19562	VL/76/1	19563	VL/77/1
1956804040	19568			
1957304040	19573	BC/79/1		
1957401250	19574	BC/80/1		
1957404040	19574	BC/80/1		
1957409550	19574	BC/80/1		
1957909580	19579	MB/75/1	19580	MB/74/1
1958109580	19581	MB/77/1	19582	MB/76/1
1958635460	19586			
1959194040	19591	BC/81/1		
1960401230	19604	RW/9/2	19605	RW/13/2
1960403290	19604	RW/9/2	19605	RW/13/2
1960409550	19604	RW/9/2	19605	RW/13/2
1961301230	19613	FT/12/1	19614	FT/11/1
1961304040	19613	FT/12/1	19614	FT/11/1
1961309550	19613	FT/12/1	19614	FT/11/1
1961309580	19613	FT/12/1	19614	FT/11/1
1961703270	19617	DF/30/1	19911	DF/31/1
1961705700	19617	DF/30/1	19911	DF/31/1
1961909530	19619			
1962003320	19620	SA/30/1	19621	SA/31/1
1962005380	19620	SA/30/1	19621	SA/31/1
1962203320	19622	LH/82/2		
1963205450	19632	MB/85/1	19633	MB/84/1
1963405380	19634	PB/27/1	19365	PB/28/1
1963405450	19634	PB/27/1	19365	PB/28/1
1963903270	19639	SA/23/1		
1964701230	19647	SV/34/1		
1964709530	19647	SV/34/1		
1964709580	19647	SV/34/1		
1965503270	19655	BT/59/1		
1965703270	19657	BT/59/6		
1965703280	19657	BT/59/6		
1965709580	19657	BT/59/6		
1967203290	19672	FT/8/1	19673	FT/9/1
1968003270	19680	SA/34/1		
1968200	19682	SA/35/1		
1968705460	19687			
1969005460	19690			
1969403320	19694	FI/106/1		
1969409530	19694	FI/106/1		
1969905380	19699	PB/18/2	19847	PB/18/1
1969905380	19699	PB/18/2	19847	PB/18/1
1969905450	19699	PB/18/2	19847	PB/18/1
1970605370	19579	MB/75/1	19580	MB/74/1
1970605380	19579	MB/75/1	19580	MB/74/1
1970605450	19579	MB/75/1	19580	MB/74/1
1970705370	19581	MB/77/1	19582	MB/76/1
1970705450	19581	MB/77/1	19582	MB/76/1
1970803270	19708	GG/232/1		
1971803290	19718		19719	
1972305460	19723			
1972315460	1972310			
1974309530	19004	PB/32/2	19743	PB/32/1
1974403270	19744	CS/63/1		
1974503270	19745	CS/64/1		
1974505700	19745	CS/64/1		
1975403320	19754	FI/115/1		
1975405380	19754	FI/115/1		

JURID	WVA1	BFMC1	WVA2	BFMC2
1975803270	19758	GG/235/1	19759	GG/236/1
1976003290	19760	SA/36/1	19761	SA/37/1
1976201250	19762	LZ/2/1	19763	LZ/3/1
1976203290	19762	LZ/2/1	19763	LZ/3/1
1976209550	19762	LZ/2/1	19763	LZ/3/1
1976609550	19766			
1977909550	19779			
1978205370	19782	SY/31/1	19245	SY/23/1
1978205450	19782	SY/31/1	19245	SY/23/1
1978600	19786			
1979901230	19799	VL/82/1	19800	VL/81/1
1979901820	19799	VL/82/1	19800	VL/81/1
1979905450	19799	VL/82/1	19800	VL/81/1
1979909530	19799	VL/82/1	19800	VL/81/1
1979909580	19799	VL/82/1	19800	VL/81/1
1980109550	19801		19802	
1980409580	19804	DO/87/1	19805	DO/88/1
1980809580	19808		19809	
1982109580	19821	SY/34/1	19822	SY/33/1
1982303320	19823	PB/34/2	19786	PB/34/1
1982305380	19823	PB/34/2	19786	PB/34/1
1982403320	19824	PB/35/1		
1982509550	19825	BC/99/1		
1983805380	19824	PB/35/1	19838	PB/35/2
1983809530	19824	PB/35/1	19838	PB/35/2
1984709530	19699	PB/18/2	19847	PB/18/1
1985809530	19858		19859	
1986203290	19862	FU/17/1	19863	FU/18/1
1986209550	19862	FU/17/1	19863	FU/18/1
1987709580	19877	PD/7/1	19878	PD/8/1
1987901230	19094	BC/97/1		
1987901230	19369	FU/4/2	19370	FU/5/2
1987901230	19879	PD/3/1	19881	PD/4/1
1987909580	19879	PD/3/1	19881	PD/4/1
1988501820	19885	VL/83/1	19886	VL/84/1
1988509530	19885	VL/83/1	19886	VL/84/1
1988709530	19887	CW/11/1		
1988801230	19888	DF/36/1	19889	DF/37/1
1988805700	19888	DF/36/1	19889	DF/37/1
1988809530	19888	DF/36/1	19889	DF/37/1
1989001230	19890	DF/32/1	19891	DF/33/1
1989003270	19890	DF/32/1	19891	DF/33/1
1989005700	19890	DF/32/1	19891	DF/33/1
1989009530	19890	DF/32/1	19891	DF/33/1
1989204040	19892	SJ/26/1	19893	SJ/27/1
1989209550	19892	SJ/26/1	19893	SJ/27/1
1989603270	19896	AX/14/6		
1989609530	19896	AX/14/6		
1990001230	19900	DF/34/1	19901	DF/35/1
1990005700	19900	DF/34/1	19901	DF/35/1
1990009580	19900	DF/34/1	19901	DF/35/1
1990201250	19902	BC/100/1	19903	BC/101/1
1990204040	19902	BC/100/1	19903	BC/101/1
1990209580	19902	BC/100/1	19903	BC/101/1
1990801230	19908	RW/22/1	19909	RW/21/1
1990803290	19908	RW/22/1	19909	RW/21/1
1990809550	19908	RW/22/1	19909	RW/21/1
1991203290	19912	LZ/5/1	19913	LZ/4/1
1991405700	19914	DF/83/1	19915	DF/84/1

JURID / All rights reserved 2005

JURID	WVA1	BFMC1	WVA2	BFMC2
1991409530	19914	DF/83/1	19915	DF/84/1
1991803320	19918	FI/124/1		
1991809530	19918	FI/124/1		
1991903270	19919	BT/84/1		
1991909580	19919	BT/84/1		
1992103270	19921	CW/12/1		
1992305380	19923	GG/211/1		
1992500	19925	SV/40/1		
1992709530	19927	SV/42/1		
1992809530	19928	RW/26/1		
1993101230	19931	SV/40/2		
1993101820	19931	SV/40/2		
1993105450	19931	SV/40/2		
1993109530	19931	SV/40/2		
1993109580	19931	SV/40/2		
1993201230	19932	SV/41/2		
1993201820	19932	SV/41/2		
1993209530	19932	SV/41/2		
1993209580	19932	SV/41/2		
1993301230	19933	SV/42/2		
1993305450	19933	SV/42/2		
1993309530	19933	SV/42/2		
1993309580	19933	SV/42/2		
1993401230	19934	RN/100/1		
1993403270	19934	RN/100/1		
1993403280	19934	RN/100/1		
1993409530	19934	RN/100/1		
1993409580	19934	RN/100/1		
1993501230	19935	RN/101/1		
1993503270	19935	RN/101/1		
1993503280	19935	RN/101/1		
1993509530	19935	RN/101/1		
1993509580	19935	RN/101/1		
1993801820	19090	VL/87/2		
1993801820	19938	VL/87/1		
1993809530	19090	VL/87/2		
1993809530	19938	VL/87/1		
1993809580	19090	VL/87/2		
1993809580	19938	VL/87/1		
1993901820	19071	VL/88/1		
1993901820	19071	VL/88/2		
1993901820	19939	VL/88/1		
1993905380	19071	VL/88/1		
1993909530	19071	VL/88/1		
1993909530	19071	VL/88/2		
1993909530	19939	VL/88/1		
1993909580	19071	VL/88/1		
1993909580	19071	VL/88/2		
1993909580	19939	VL/88/1		
1994001820	19068	VL/89/2		
1994001820	19940	VL/89/1		
1994009530	19068	VL/89/2		
1994009580	19068	VL/89/2		
1994009580	19940	VL/89/1		
1994101230	19941	VL/86/1		
1994101820	19941	VL/86/1		
1994109530	19941	VL/86/1		
1994109580	19941	VL/86/1		
1994605380	19946		19947	

JURID	WVA1	BFMC1	WVA2	BFMC2
1994605450	19946		19947	
1995203290	19952	BC/104/1	19953	BC/105/1
1996703290	19967	BC/106/1	19968	BC/107/1
1996709550	19967	BC/106/1	19968	BC/107/1
2343005390	23430			
2900109561	29001			
2900805440	29008			
2901104240	29011			
2901109560	29011			
2901303371	29013			
2901303372	29013			
2901309561	29013			
2901505440	29015			
2901605440	29016			
2901605441	29016			
2901609561	29016			
2901709560	29017			
2902409561	29024			
2903004230	29030			
2903005390	29030			
2903005391	29030			
2903005392	29030			
2903009560	29030			
2903009560	29053			
2903204240	29032			
2903209560	29032			
2904303381	29043			
2904303382	29043			
2904309560	29043			
2904403331	29044			
2904409561	29044			
2904905590	29049			
2905304230	29053			
2905305390	29053			
2905405590	29054			
2905503010	29055			
2905509560	29055			
2905603010	29056			
2906503341	29065			
2906509560	29065			
2906703341	29067			
2906703342	29067			
2906709560	29067			
2907203341	29072			
2907209561	29072			
2907503341	29075			
2907509561	29075			
2907604530	29076			
2907609560	29076			
2907705390	29077			
2907709561	29077			
2908809560	29088			
2909005390	29090			
2909005391	29090			
2909005392	29090			
2909009560	29090			
2909103010	29091			
2909305390	29093			
2910009560	29100			

JURID	WVA1	BFMC1	WVA2	BFMC2
2910815390	29105			
2910815390	29108			
2911509100	29115			
2912009560	29120			
2912104530	29121			
2912104531	29121			
2912114530	29121			
2912409560	29124			
2912509560	29125			
2912605399	29126			
2913109560	29131			
2913609560	29136			
2913709560	29137			
2914209569	29142			
2914305390	29120			
2915805390	29158			
2915905399	29126			
2915905399	29159			
2916009560	29160			
2916205399	29162			
2930209560	29302			
2935709560	29121			
2937409560	29122			
2949805440	29498			
2949809560	29498			
2951009560	29510			
2955405880	29554			
2955415880	29554			
2958205440	29582			
2958209560	29582			
2968805440	29688			
2974705440	29747			
2974709560	29747			
2978205440	29782			
2983505440	29835			
2983509560	29835			
2996905440	29969			
2998404611	29984			
2998404612	29984			
5214300010	29626			
571217J	20366		20367	
571233J	20364		20365	
571236J	20011			
571246J	20570		20442	
571250J	20359			
571255J	20280			
571272J	20784			
571304J	20787		20741	
571306J	20927			
571321J	20380			
571325J	21049			
571336J	21141			
571340J	20366		20367	
571368J	20706		20947	
571372J	20392			
571379J	20759			
571380J	20979			
571393J	21206			
571416J	29038			

JURID by Honeywell

© JURID / All rights reserved 2005

JURID	WVA1	BFMC1	WVA2	BFMC2	JURID	WVA1	BFMC1	WVA2	BFMC2	JURID	WVA1	BFMC1	WVA2	BFMC2
571419J	29012													
571422J	21620													
571442J	21160													
571446J	21006													
571447J	21188													
571458J	20652													
571460J	20124													
571521J	20934		20573											
571543J	20323													
571745J	21470													
571746J	21469													
571820J	21019													
571822J	20904													
571839J	21797													
571840J	21799													
571843J	23003													
571844J	21576		21577											
571845J	21904													
571846J	21621		21622											
571847J	21478													
571875J	21882													
571910J	21592													
571932J	71932													
571934J	21883													
571946J	23022													
571947J	23020													
571948J	21634													
571950J	23021													
572225J	21254													
572250J	20731													
572258J	20880													
572335J	21115													
572361	20863													
573015	23430													
573055	23669													
573058	23099													
573060	21627													
573061	21799													
573081J	29038													
573107	23613													

JURID / All rights reserved 2005

JURID / All rights reserved 2005

WVA/BFMC/JURID

JURID / All rights reserved 2005

JURID by Honeywell

©JURID / All rights reserved 2005

WVA1	BFMC1	JURID	WVA2	BFMC2
10116		**1011604210**		
10191	DK/31/1	**1019105980**		
11082	GL/11/1	**1108204210**		
11084	BC/51/1	**1108401160**		
11107		**1110701160**		
11185		**1118505380**		
11268	VN/7/1	**1126805870**		
11282	TP/1/1	**1128205300**		
11284	BW/1/1	**1128404210**		
11284	BW/1/1	**1128405360**		
11285	BW/6/1	**1128505351**		
11286		**1128604210**		
11289		**1128905360**		
11290		**1129005380**		
11295	NU/6/1	**1129505360**		
11498		**1149805360**		
11534		**1153405800**		
11556		**1155603320**		
11582	MB/90/1	**1101905460**	11019	MB/91/2
13141	DK/17/1	**1314105910**		
13189	OP/20/1	**1318905910**		
13193		**1319305870**		
13193	VN/14/1	**1351605876**	13516	VN/18/1
13202		**1320204210**		
13203		**1320301030**		
13203		**1320305460**		
13205		**1320501160**	13206	
13212		**1321201160**		
13240		**1324004210**		
13250		**1325005360**		
13279	GG/70/1	**1327909530**		
13464	SA/15/1	**1346403320**	13465	SA/16/1
13513	GG/172	**1351300**		
13532	MB/88/1	**1302005460**	13020	MB/89/2
15004	BC/52/1	**1500405380**		
15044	FD/85/1	**1504404210**		
15057	MB/64/1	**1505705380**		
15104	RN/58/1	**1510403320**	15107	RN/57/1
15150	BC/62/1	**1515005380**	15174	BC/63/1
15162	MB/116/2	**1516205380**	15836	MB/116/1
15162	MB/116/2	**1516235380**	15836	MB/116/1
15163		**1516305460**		
15174	BC/63/1	**1517405380**		
15192		**1519205300**		
15193		**1519305300**		
15207	FI/79/1	**1520709580**		
15215	MB/22/1	**1521505380**		
15247	FD/86/1	**1524705380**		
15253	SA/21/1	**1525303320**	15254	SA/20/1
15256		**1525605350**		
15280	BO/38/1	**1528009530**	15281	BO/37/1
15282	BT/48/1	**1528203320**		
15287		**1528705360**		
15300	MB/62/1	**1530003320**		
15302		**1530204210**	15303	
15304		**1530404210**		
15304		**1530405360**		
15306	SY/2/2	**1530605460**		
15336	FI/80/1	**1533603320**		
15340		**1534004210**		
15349	MB/70/1	**1534909530**	15350	MB/69/1
15349	MB/70/1	**1534995460**	15350	MB/69/1
15419		**1541905380**		
15494	FI/84/1	**1549409530**		
15505		**1550505350**		
15544	GG/95/1	**1554409530**		
15558	FI/80/1	**1555803320**		
15580	MB/94/1	**1558005460**	15581	MB/95/1
1558020	MB/94/1	**1558035460**	1558021	MB/95/1
15698	SA/14/1	**1569803320**		
15728		**1572805460**		
15732	FI/101/1	**1573205380**	15733	FI/100/1
15740		**1574005910**	11025	
15742	MB/80/1	**1503005460**	15030	MB/81/3
15751		**1575104040**		
15775	VN/19/1	**1577505380**		
15789	GG/171/1	**1578909530**		
15814	FI/118/1	**1581403320**	15843	FI/117
15814	FI/118/1	**1581409530**	15843	FI/117
15817	MP/37/1	**1581703320**	15823	MP/38/1
15817	MP/37/1	**1581709580**	15823	MP/38/1
15854	AT/32	**1585409530**		
15857		**1585709530**	15858	
15860		**1586009530**	15862	
15869	MB/107/1	**1505905460**	15059	MB/108/2
15879	GG/209/1	**1587905380**		
15879	GG/209/1	**1587909580**		
17012	DF/40/1	**1701205700**	17013	DF/41/1
17017	GG/217/1	**1701709580**		
17050	MF/1/1	**1705005380**	17051	MF/2/1
17092	SY/8/1	**1709205460**	17093	SY/9/1
17094	SY/7/1	**1709403320**		
17096	PB/23/1	**1709603270**	17099	PB/26/1
17105	MB/65/1	**1710505380**		
17105	MB/65/1	**1710509530**		
17115	BC/39/1	**1711504040**		
17120		**1712015380**	17138	
17135		**1713505460**		
17161	SV/26/1	**1716101230**		
17161	SV/26/1	**1716109530**		
17161	SV/26/1	**1716109580**		
17229	BO/39/1	**1722909530**	17230	BO/40/1
17238	MP/30/2	**1723805050**		
17238	MP/30/2	**1723805380**		
17238	MP/30/2	**1768301230**		
17238	MP/30/2	**1768309530**		
17244	PD/2/1	**1724405380**		
17247	SA/8/1	**1724703320**	17305	SA/9/1
17248	BC/32/2	**1724805380**		
17259	MB/56/1	**1725935380**		
17263	DF/22/2	**1726305700**	17264	DF/23/2
17269	BC/32/1	**1726905380**	17270	BC/33/1
17269	BC/32/1	**1726909530**	17270	BC/33/1
17272	BC/48/1	**1727205460**		
17275	KM/10/1	**1727505380**		
17276	MB/60/1	**1727601820**		
17276	MB/60/1	**1727605050**		
17278	MB/109/2	**1727805380**	17927	MB/109/1
17278	MB/109/2	**1727835380**	17927	MB/109/1
17280	MB/110/2	**1728005380**	17928	MB/110/1
17280	MB/110/2	**1728035380**	17928	MB/110/1
17285	BC/2/1	**1728505050**		
17285	BC/2/1	**1728595380**		
17287	MB/115/2	**1728705380**	17929	MB/115/1
17287	MB/115/2	**1728735380**	17929	MB/115/1
17290	MB/111/2	**1729005380**	17949	MB/111/1
17290	MB/111/2	**1729035380**	17949	MB/111/1
17297	MB/67/1	**1729705380**		
17298	MB/68/1	**1729805380**		
17306	BT/56/1	**1730603270**	17309	BT/57/1
17307	BT/54/1	**1730703320**	17308	BT/55/1
17316	FD/121/1	**1731609530**		
17323	FI/81/1	**1732303320**		
17324	DF/15/3	**1732405700**	17325	DF/14/3
17339		**1733903320**		
17340	BC/77/1	**1734005380**		
17377	BC/78/1	**1737704040**		
17383	DF/10/3	**1738305700**	17384	DF/11/3
17389	KM/12/1	**1738903270**		
17408	FI/104/1	**1740801820**		
17408	FI/104/1	**1740805380**		
17409	MB/93/1	**1740925380**		
17409	MB/93/1	**1740995380**		
17410	MP/34/1	**1741005380**	17411	MP/35/1
1741008	MP/34/1	**1741015380**	1741108	MP/35/1
17456		**1745609550**		
17482	FI/94/1	**1748203320**		
17497	BT/52/1	**1749705380**	17498	BT/53/1
17500	SA/17/1	**1750003320**	17506	SA/18/1
17526	UM/26/-	**1752603320**		
17530	BT/57/1	**17530**	17531	BT/56/1
17546	GG/118/1	**1754609580**		
17555	GG/144/1	**1755503320**		
17582	SA/24/1	**1758203320**	17805	BT/53/1
17589		**1758903320**		
17592		**1759203290**		
17612		**1761203320**		
17635	SY/20/2	**1763503320**	17636	SY/26/1
17635	SY/20/2	**1763509530**	17636	SY/26/1
17664	VL/71/1	**1766401820**	17665	VL/70/1
17664	VL/71/1	**1766409530**	17665	VL/70/1
17682	MP/29/1	**1768205380**		
17682	MP/29/1	**1768209530**		
17692	FI/97/1	**1769209530**		
17739		**1773905380**		
17739		**1773909530**		
17742	PB/9/1	**1774205380**	17743	PB/10/1
17744		**1774403320**		
17758	MF/24/1	**1775803270**		
17758	MF/24/1	**1775805380**		
17759	MF/24/1	**1775903270**		
17760		**1776003290**		
17764	OM/12/1	**1776405380**	17408	FI/102/1
17781	FI/109/1	**1778105380**	17782	FI/108/1
17783		**1778305460**	17784	
17792	FI/108/1	**1779203320**	17794	FI/109/1
17795	MB/83/1	**1779505380**	17796	MB/82/1

JURID / All rights reserved 2005

WVA1	BFMC1	JURID	WVA2	BFMC2
17797		**1779709550**		
17804	DO/80/2	**1780401820**		
17807		**1780709550**		
1780810		**1780815460**	1781510	
17827	SA/28/1	**1782703320**	17828	SA/29/1
17827	SA/28/1	**1782705380**	17828	SA/29/1
17827	SA/28/1	**1782709530**	17828	SA/29/1
17827	SA/28/1	**1782909530**	17828	SA/29/1
17829	BT/76/1	**1782903320**	17830	SA/25/1
17829	BT/76/1	**1782905380**	17830	SA/25/1
17829	BT/76/1	**1782909530**	17830	SA/25/1
17831	SA/27/1	**1783103320**	17832	SA/26/1
17831	SA/27/1	**1783105380**	17832	SA/26/1
17832	SA/26/1	**1783203270**		
17869	FI/105/1	**1786909530**		
17879	FI/126/1	**1787903320**	17880	FI/125/1
17881		**1788105050**		
17882		**1788205380**		
17885	FI/113/1	**1788503320**		
17885	FI/113/1	**1788509530**		
1788830		**1788835450**		
17897		**1789703290**	17898	
17900	MP/39/1	**1790003270**	17901	MP/40/1
17900	MP/39/1	**1790009580**	17901	MP/40/1
17905		**1790509550**	17906	
17908		**1790805380**		
17915		**1791505380**		
17924	FI/120/1	**1792403320**	17925	FI/121/1
17924	FI/120/1	**1792409530**	17925	FI/121/1
17932	GG/187/1	**1793209530**	17933	GG/186/1
17938		**1793800**		
17940	LH/94/1	**1794009530**		
17952		**1795209530**		
17953		**1795309530**		
17957		**1795709530**		
17963	DO/86/1	**1796309530**	17964	DO/85/1
17971	PD/5/1	**1797105450**	17972	PD/6/1
17971	PD/5/1	**1797109580**	17972	PD/6/1
17973	MB/100/1	**1735005460**	17350	MB/101/2
17975	MB/117/1	**1735105460**	17351	MB/118/2
17988	GG/210/1	**1798805380**		
17991	SV/39/2	**1799101820**		
17992	VL/85/1	**1799201820**		
18134		**1813400**	18135	
19004	PB/32/2	**1900405380**	19743	PB/32/1
19004	PB/32/2	**1900405450**	19743	PB/32/1
19004	PB/32/2	**1900435380**	19743	PB/32/1
19004	PB/32/2	**1900435450**	19743	PB/32/1
19004	PB/32/2	**1974309530**	19743	PB/32/1
19005	BC/41/1	**1900545380**		
19010	DF/45/1	**1901001230**	19011	DF/44/1
19010	DF/45/1	**1901005700**	19011	DF/44/1
19010	DF/45/1	**1901009530**	19011	DF/44/1
19019	BC/61/1	**1901905380**		
19024	DF/42/1	**1902405700**	19031	DF/43/1
19032	BC/98/1	**1903201250**		
19032	BC/98/1	**1903204040**		
19032	BC/98/1	**1903209550**		
19032	BC/98/1	**1903209580**		

WVA1	BFMC1	JURID	WVA2	BFMC2
19036	RW/5/4	**1903601230**	19037	RW/6/4
19036	IL/66/3	**1903601232**	19037	IL/67/3
19036	RW/5/4	**1903604040**	19037	RW/6/4
19036	IL/66/3	**1903604042**	19037	IL/67/3
19036	RW/5/4	**1903609550**	19037	RW/6/4
19036	IL/66/3	**1903609552**	19037	IL/67/3
19036	IL/66/3	**1903609553**	19037	IL/67/3
19036	RW/34/1	**1903609555**	19037	RW/35/1
19036	RW/5/4	**1903609580**	19037	RW/6/4
19049	SA/10/1	**1904903270**	19199	SA/11/1
19049	SA/10/1	**1904903280**	19199	SA/11/1
19049	SA/10/1	**1904904040**	19199	SA/11/1
19052	DF/46/1	**1905205700**	19055	DF/47/1
19052	DF/46/1	**1905209530**	19055	DF/47/1
19063	DF/48/1	**1906301230**	19064	DF/49/1
19063	DF/48/1	**1906305700**	19064	DF/49/1
19063	DF/48/1	**1906309530**	19064	DF/49/1
19068	VL/89/2	**1906801230**		
19068	VL/89/2	**1994001820**		
19068	VL/89/2	**1994009530**		
19068	VL/89/2	**1994009580**		
19069	DF/50/1	**1906903270**	19077	DF/51/1
19069	DF/50/1	**1906905700**	19077	DF/51/1
19071	VL/88/1	**1907101230**		
19071	VL/88/2	**1907101230**		
19071	VL/88/1	**1993901820**		
19071	VL/88/2	**1993901820**		
19071	VL/88/1	**1993905380**		
19071	VL/88/1	**1993909530**		
19071	VL/88/2	**1993909530**		
19071	VL/88/1	**1993909580**		
19071	VL/88/2	**1993909580**		
19072	GG/83/1	**1907203320**		
19072	GG/83/1	**1907209530**		
19074	PB/17/2	**1907405380**	19850	PB/16/1
19074	PB/17/2	**1907405450**	19850	PB/16/1
19075	SV/8/1	**1907501230**		
19075	SV/8/1	**1907501820**		
19075	SV/8/1	**1907509530**		
19075	SV/8/1	**1907509580**		
19076	PB/11/2	**1907605380**	19559	PB/12/1
19076	PB/11/2	**1907605450**	19559	PB/12/1
19076	PB/11/2	**1955809530**	19559	PB/12/1
19078	MB/120/1	**1907825380**	19112	MB/121/1
19084	PB/29/2	**1908405380**	19856	PB/30/1
19084	PB/29/2	**1908405450**	19856	PB/30/1
19090	VL/87/2	**1909001230**		
19090	VL/87/2	**1993801820**		
19090	VL/87/2	**1993809530**		
19090	VL/87/2	**1993809580**		
19091		**1909103270**	19098	
19094	BC/97/1	**1909401250**		
19094	BC/97/1	**1909404040**		
19094	BC/97/1	**1909409550**		
19094	BC/97/1	**1909409580**		
19094	BC/97/1	**1987901230**		
19102	BC/54/1	**1910204040**		
19103	BC/55/1	**1910304040**		
19111	GG/92/1	**1911109530**		

WVA1	BFMC1	JURID	WVA2	BFMC2
19114		**1911405380**	19115	
19117	DF/20/1	**1911709550**	19118	DF/21/1
19125	MB/61/1	**1912505450**		
1913310		**1913315450**		
19150	DF/20/3	**1915005700**	19151	DF/21/3
19150	DF/20/3	**1915009530**	19151	DF/21/3
19153	MF/14/1	**1915303270**	19154	MF/13/1
19160	MB/51/1	**1916005050**		
19160	MB/51/1	**1916009530**		
19166	BC/90/1	**1916604040**	19167	BC/91/1
19168	BC/92/1	**1916804040**	19169	BC/93/1
19170		**1917035460**		
19177	GG/218/1	**1917701230**		
19177	GG/218/1	**1917709580**		
19182	MB/66/1	**1918205380**		
19187	RN/104/1	**1918701230**		
19187	RN/104/1	**1918703270**		
19187	RN/104/1	**1918703280**		
19187	RN/104/1	**1918709550**		
19194		**1919405050**		
19200	BC/35/1	**1920004040**		
19235		**1923505450**		
19236		**1923605450**		
19245	SY/23/1	**1924505370**	19782	
19245	SY/23/1	**1924505450**	19782	
19246	SY/24/1	**1924605380**		
19246	SY/24/1	**1924605450**		
19255	RN/102/1	**1925503270**	19259	RN/103/1
19256	DF/16/1	**1925601230**	19260	DF/17/2
19256	DF/16/1	**1925605700**	19260	DF/17/2
19256	DF/16/1	**1925609530**	19260	DF/17/2
19256	DF/16/1	**1925609580**	19260	DF/17/2
19262	PB/25/1	**1909903270**	19342	PB/25/2
19262	PB/25/1	**1926205380**	19342	PB/25/2
19262	PB/25/1	**1926209530**	19342	PB/25/2
19263	PB/24/1	**1926305380**	19343	PB/24/2
19263	PB/24/1	**1926309530**	19343	PB/24/2
19269	GG/208/1	**1926903270**	19272	GG/207/1
19283	SJ/28/1	**1928304040**	19284	SJ/29/1
19283	SJ/28/1	**1928394040**	19284	SJ/29/1
19315	SA/32/1	**1931503270**	19319	SA/33/1
19333	YK/7/2	**1933309550**	19334	YK/6/2
19338	FT/5/1	**1933803290**		
19345	UM/24/-	**1934503270**		
19357		**1935703290**	19358	
19359		**1935903290**	19360	
19365	RW/2/1	**1936501230**	19366	RW/1/1
19365	RW/2/1	**1936504040**	19366	RW/1/1
19365	RW/2/5	**1936504042**	19366	RW/1/5
19365	RW/2/1	**1936509550**	19366	RW/1/1
19365	RW/2/5	**1936509552**	19366	RW/1/5
19365	RW/2/1	**1936509580**	19366	RW/1/1
19365	RW/2/5	**1936509582**	19366	RW/1/5
19367		**1936703290**	19368	
19369	FU/4/2	**1936904040**	19370	FU/5/2
19369	FU/4/2	**1987901230**	19370	FU/5/2
19371	GG/142/1	**1937129530**		
19384	CW/4/1	**1938501230**	19385	CW/4/2
19384	CW/4/1	**1938505380**	19385	CW/4/2

JURID by Honeywell

© JURID / All rights reserved 2005

WVA1	BFMC1	JURID	WVA2	BFMC2
19384	CW/4/1	**1938505380**	19385	CW/4/2
19384	CW/4/1	**1938509530**	19385	CW/4/2
19384	CW/4/1	**1938509580**	19385	CW/4/2
19393	SV/27/1	**1939301230**		
19393	SV/27/1	**1939303270**		
19393	SV/27/1	**1939309530**		
19393	SV/27/1	**1939309580**		
19396		**1939605380**		
19397		**1939704040**		
19401	SJ/36/1	**1940103290**		
19405		**1940503290**		
19406	LF/102/1	**1940603290**	19407	LF/103/1
19444		**1944403290**		
19449	HJ/20/1	**1944905380**	19450	HJ/21/1
19461	YK/9/3	**1946109550**	19462	YK/8/3
19466	MB/58/3	**1946605450**		
19467	VL/73/1	**1946701230**	19468	VL/72/1
19467	VL/73/1	**1946701820**	19468	VL/72/1
19467	VL/73/1	**1946709530**	19468	VL/72/1
19467	VL/73/1	**1946709580**	19468	VL/72/1
19473	MP/25/1	**1947305380**	19747	MP/26/1
1947508	MP/27/1	**1947513270**	1947608	MP/28/1
19477	SJ/30/1	**1947703290**	19478	SJ/31/1
19479	LF/100/1	**1947903290**	19480	LF/101/1
19490	SJ/34/1	**1949003290**	19491	SJ/35/1
19492	RW/24/1	**1949209580**		
19494	MP/31/2	**1949401230**		
19494	MP/31/2	**1949405050**		
19494	MP/31/2	**1949405370**		
19494	MP/31/2	**1949405380**		
19494	MP/31/2	**1949405450**		
19494	MP/31/2	**1949409530**		
19494	MP/31/2	**1949409580**		
19495	MP/32/2	**1949501230**		
19495	MP/32/2	**1949505050**		
19495	MP/32/2	**1949505380**		
19495	MP/32/2	**1949505450**		
19495	MP/32/2	**1949509530**		
19495	MP/32/2	**1949509580**		
19495	MP/32/2	**1949515390**		
19496	MP/36/2	**1949601230**		
19496	MP/36/2	**1949605050**		
19496	MP/36/2	**1949605380**		
19496	MP/36/2	**1949605450**		
19496	MP/36/2	**1949609530**		
19496	MP/36/2	**1949609580**		
19496	MP/36/2	**1949615390**		
19502		**1950200**		
19503		**1950302320**		
19503	CW/3/1	**1950303320**		
19503	CW/3/1	**1950309580**		
19504	GG/213/1	**1950405380**		
19506	MB/114/2	**1950605380**	19844	MB/113/1
19506	MB/114/2	**1950605450**	19844	MB/113/1
19506	MB/114/2	**1950625380**	19844	MB/113/1
19506	MB/114/2	**1950625450**	19844	MB/113/1
19511	LF/104/1	**1951103270**	19512	LF/105/1
19515	SJ/23/1	**1951504040**	19516	SJ/22/1
19517	SJ/25/1	**1951704040**	19518	SJ/24/1

WVA1	BFMC1	JURID	WVA2	BFMC2
19542	RW/25/1	**1954209580**		
19543	GG/214/1	**1954301230**	19552	GG/215/1
19543	GG/214/1	**1954309580**	19552	GG/215/1
19544		**1954403290**		
19553	RW/28/1	**1955301230**	19554	RW/28/2
19553	RW/29/1	**1955303270**	19716	RW/33/1
19553	RW/28/1	**1955309530**	19554	RW/28/2
19555	RW/29/1	**1955509530**	19556	RW/29/2
19556	RW/28/1	**1955603270**	19714	RW/31/1
19557	FT/7/1	**1955701230**	19606	FT/6/1
19557	FT/7/1	**1955704040**	19606	FT/6/1
19557	FT/7/1	**1955709550**	19606	FT/6/1
19557	FT/7/1	**1955709580**	19606	FT/6/1
19560	VL/74/1	**1956009530**	19561	VL/75/1
19562	VL/76/1	**1956201230**	19563	VL/77/1
19562	VL/76/1	**1956205450**	19563	VL/77/1
19562	VL/76/1	**1956209530**	19563	VL/77/1
19568		**1956804040**		
19573	BC/79/1	**1957304040**		
19574	BC/80/1	**1957401250**		
19574	BC/80/1	**1957404040**		
19574	BC/80/1	**1957409550**		
19579	MB/75/1	**1957909580**	19580	MB/74/1
19579	MB/75/1	**1970605370**	19580	MB/74/1
19579	MB/75/1	**1970605380**	19580	MB/74/1
19579	MB/75/1	**1970605450**	19580	MB/74/1
19581	MB/77/1	**1958109580**	19582	MB/76/1
19581	MB/77/1	**1970705370**	19582	MB/76/1
19581	MB/77/1	**1970705450**	19582	MB/76/1
19586		**1958635460**		
19591	BC/81/1	**1959194040**		
19604	RW/9/2	**1960401230**	19605	RW/13/2
19604	RW/9/2	**1960403290**	19605	RW/13/2
19604	RW/9/2	**1960409550**	19605	RW/13/2
19613	FT/12/1	**1961301230**	19614	FT/11/1
19613	FT/12/1	**1961304040**	19614	FT/11/1
19613	FT/12/1	**1961309550**	19614	FT/11/1
19613	FT/12/1	**1961309580**	19614	FT/11/1
19617	DF/30/1	**1961703270**	19911	DF/31/1
19617	DF/30/1	**1961705700**	19911	DF/31/1
19619		**1961909530**		
19620	SA/30/1	**1962003320**	19621	SA/31/1
19620	SA/30/1	**1962005380**	19621	SA/31/1
19622	LH/82/2	**1962203320**		
19632	MB/85/1	**1963205450**	19633	MB/84/1
19634	PB/27/1	**1963405380**	19365	PB/28/1
19634	PB/27/1	**1963405450**	19365	PB/28/1
19639	SA/23/1	**1963903270**		
19647	SV/34/1	**1964701230**		
19647	SV/34/1	**1964709530**		
19647	SV/34/1	**1964709580**		
19655	BT/59/1	**1965503270**		
19657	BT/59/6	**1965703270**		
19657	BT/59/6	**1965703280**		
19657	BT/59/6	**1965709580**		
19672	FT/8/1	**1967203290**	19673	FT/9/1
19680	SA/34/1	**1968003270**		
19682	SA/35/1	**1968200**		
19687		**1968705460**		

WVA1	BFMC1	JURID	WVA2	BFMC2
19690		**1969005460**		
19694	FI/106/1	**1969403320**		
19694	FI/106/1	**1969409530**		
19699	PB/18/2	**1969905380**	19847	PB/18/1
19699	PB/18/2	**1969905380**	19847	PB/18/1
19699	PB/18/2	**1969905450**	19847	PB/18/1
19699	PB/18/2	**1984709530**	19847	PB/18/1
19708	GG/232/1	**1970803270**		
19718		**1971803290**	19719	
19723		**1972305460**		
1972310		**1972315460**		
19744	CS/63/1	**1974403270**		
19745	CS/64/1	**1974503270**		
19745	CS/64/1	**1974505700**		
19754	FI/115/1	**1975403320**		
19754	FI/115/1	**1975405380**		
19758	GG/235/1	**1975803270**	19759	GG/236/1
19760	SA/36/1	**1976003290**	19761	SA/37/1
19762	LZ/2/1	**1976201250**	19763	LZ/3/1
19762	LZ/2/1	**1976203290**	19763	LZ/3/1
19762	LZ/2/1	**1976209550**	19763	LZ/3/1
19766		**1976609550**		
19779		**1977909550**		
19782	SY/31/1	**1978205370**	19245	SY/23/1
19782	SY/31/1	**1978205450**	19245	SY/23/1
19786		**1978600**		
19799	VL/82/1	**1979901230**	19800	VL/81/1
19799	VL/82/1	**1979901820**	19800	VL/81/1
19799	VL/82/1	**1979905450**	19800	VL/81/1
19799	VL/82/1	**1979909530**	19800	VL/81/1
19799	VL/82/1	**1979909580**	19800	VL/81/1
19801		**1980109550**	19802	
19804	DO/87/1	**1980409580**	19805	DO/88/1
19808		**1980809580**	19809	
19821	SY/34/1	**1982109580**	19822	SY/33/1
19823	PB/34/2	**1982303320**	19786	PB/34/1
19823	PB/34/2	**1982305380**	19786	PB/34/1
19824	PB/35/1	**1982403320**		
19824	PB/35/1	**1983805380**	19838	PB/35/2
19824	PB/35/1	**1983809530**	19838	PB/35/2
19825	BC/99/1	**1982509550**		
19858		**1985809530**	19859	
19862	FU/17/1	**1986203290**	19863	FU/18/1
19862	FU/17/1	**1986209550**	19863	FU/18/1
19877	PD/7/1	**1987709580**	19878	PD/8/1
19879	PD/3/1	**1987901230**	19881	PD/4/1
19879	PD/3/1	**1987909580**	19881	PD/4/1
19885	VL/83/1	**1988501820**	19886	VL/84/1
19885	VL/83/1	**1988509530**	19886	VL/84/1
19887	CW/11/1	**1988709530**		
19888	DF/36/1	**1988801230**	19889	DF/37/1
19888	DF/36/1	**1988805700**	19889	DF/37/1
19888	DF/36/1	**1988809530**	19889	DF/37/1
19890	DF/32/1	**1989001230**	19891	DF/33/1
19890	DF/32/1	**1989003270**	19891	DF/33/1
19890	DF/32/1	**1989005700**	19891	DF/33/1
19890	DF/32/1	**1989009530**	19891	DF/33/1
19892	SJ/26/1	**1989204040**	19893	SJ/27/1
19892	SJ/26/1	**1989209550**	19893	SJ/27/1

JURID / All rights reserved 2005

WVA1	BFMC1	JURID	WVA2	BFMC2
19896	AX/14/6	**1989603270**		
19896	AX/14/6	**1989609530**		
19900	DF/34/1	**1990001230**	19901	DF/35/1
19900	DF/34/1	**1990005700**	19901	DF/35/1
19900	DF/34/1	**1990009580**	19901	DF/35/1
19902	BC/100/1	**1990201250**	19903	BC/101/1
19902	BC/100/1	**1990204040**	19903	BC/101/1
19902	BC/100/1	**1990209580**	19903	BC/101/1
19908	RW/22/1	**1990801230**	19909	RW/21/1
19908	RW/22/1	**1990803290**	19909	RW/21/1
19908	RW/22/1	**1990809550**	19909	RW/21/1
19912	LZ/5/1	**1991203290**	19913	LZ/4/1
19914	DF/83/1	**1991405700**	19915	DF/84/1
19914	DF/83/1	**1991409530**	19915	DF/84/1
19918	FI/124/1	**1991803320**		
19918	FI/124/1	**1991809530**		
19919	BT/84/1	**1991903270**		
19919	BT/84/1	**1991909580**		
19921	CW/12/1	**1992103270**		
19923	GG/211/1	**1992305380**		
19925	SV/40/1	**1992500**		
19927	SV/42/1	**1992709530**		
19928	RW/26/1	**1992809530**		
19931	SV/40/2	**1993101230**		
19931	SV/40/2	**1993101820**		
19931	SV/40/2	**1993105450**		
19931	SV/40/2	**1993109530**		
19931	SV/40/2	**1993109580**		
19932	SV/41/2	**1993201230**		
19932	SV/41/2	**1993201820**		
19932	SV/41/2	**1993209530**		
19932	SV/41/2	**1993209580**		
19933	SV/42/2	**1993301230**		
19933	SV/42/2	**1993305450**		
19933	SV/42/2	**1993309530**		
19933	SV/42/2	**1993309580**		
19934	RN/100/1	**1993401230**		
19934	RN/100/1	**1993403270**		
19934	RN/100/1	**1993403280**		
19934	RN/100/1	**1993409530**		
19934	RN/100/1	**1993409580**		
19935	RN/101/1	**1993501230**		
19935	RN/101/1	**1993503270**		
19935	RN/101/1	**1993503280**		
19935	RN/101/1	**1993509530**		
19935	RN/101/1	**1993509580**		
19938	VL/87/1	**1993801820**		
19938	VL/87/1	**1993809530**		
19938	VL/87/1	**1993809580**		
19939	VL/88/1	**1993901820**		
19939	VL/88/1	**1993909530**		
19939	VL/88/1	**1993909580**		
19940	VL/89/1	**1994001820**		
19940	VL/89/1	**1994009580**		
19941	VL/86/1	**1994101230**		
19941	VL/86/1	**1994101820**		
19941	VL/86/1	**1994109530**		
19941	VL/86/1	**1994109580**		
19946		**1994605380**	19947	

WVA1	BFMC1	JURID	WVA2	BFMC2
19946		**1994605450**	19947	
19952	BC/104/1	**1995203290**	19953	BC/105/1
19967	BC/106/1	**1996703290**	19968	BC/107/1
19967	BC/106/1	**1996709550**	19968	BC/107/1
20011		**571236J**		
20124		**571460J**		
20280		**571255J**		
20323		**571543J**		
20359		**571250J**		
20364		**571233J**	20365	
20366		**571217J**	20367	
20366		**571340J**	20367	
20380		**571321J**		
20392		**571372J**		
20570		**571246J**	20442	
20652		**571458J**		
20706		**571368J**	20947	
20731		**572250J**		
20759		**571379J**		
20784		**571272J**		
20787		**571304J**	20741	
20863		**572361**		
20880		**572258J**		
20904		**571822J**		
20927		**571306J**		
20934		**571521J**	20573	
20979		**571380J**		
21006		**571446J**		
21019		**571820J**		
21049		**571325J**		
21115		**572335J**		
21141		**571336J**		
21160		**571442J**		
21188		**571447J**		
21206		**571393J**		
21254		**572225J**		
21469		**571746J**		
21470		**571745J**		
21478		**571847J**		
21576		**571844J**	21577	
21592		**571910J**		
21620		**571422J**		
21621		**571846J**	21622	
21627		**573060**		
21634		**571948J**		
21797		**571839J**		
21799		**571840J**		
21799		**573061**		
21882		**571875J**		
21883		**571934J**		
21904		**571845J**		
23003		**571843J**		
23020		**571947J**		
23021		**571950J**		
23022		**571946J**		
23099		**573058**		
23430		**2343005390**		
23430		**573015**		
23613		**573107**		

WVA1	BFMC1	JURID	WVA2	BFMC2
23669		**573055**		
29001		**2900109561**		
29008		**2900805440**		
29011		**2901104240**		
29011		**2901109560**		
29012		**571419J**		
29013		**2901303371**		
29013		**2901303372**		
29013		**2901309561**		
29015		**2901505440**		
29016		**2901605440**		
29016		**2901605441**		
29016		**2901609561**		
29017		**2901709560**		
29024		**2902409561**		
29030		**2903004230**		
29030		**2903005390**		
29030		**2903005391**		
29030		**2903005392**		
29030		**2903009560**		
29032		**2903204240**		
29032		**2903209560**		
29038		**571416J**		
29038		**573081J**		
29043		**2904303381**		
29043		**2904303382**		
29043		**2904309560**		
29044		**2904403331**		
29044		**2904409561**		
29049		**2904905590**		
29053		**2903009560**		
29053		**2905304230**		
29053		**2905305390**		
29054		**2905405590**		
29055		**2905503010**		
29055		**2905509560**		
29056		**2905603010**		
29065		**2906503341**		
29065		**2906509560**		
29067		**2906703341**		
29067		**2906703342**		
29067		**2906709560**		
29072		**2907203341**		
29072		**2907209561**		
29075		**2907503341**		
29075		**2907509561**		
29076		**2907604530**		
29076		**2907609560**		
29077		**2907705390**		
29077		**2907709561**		
29088		**2908809560**		
29090		**2909005390**		
29090		**2909005391**		
29090		**2909005392**		
29090		**2909009560**		
29091		**2909103010**		
29093		**2909305390**		
29100		**2910009560**		
29105		**2910815390**		

JURID by Honeywell

© JURID / All rights reserved 2005

WVA1	BFMC1	JURID	WVA2	BFMC2	WVA1	BFMC1	JURID	WVA2	BFMC2	WVA1	BFMC1	JURID	WVA2	BFMC2
29108		2910815390												
29115		2911509100												
29120		2912009560												
29120		2914305390												
29121		2912104530												
29121		2912104531												
29121		2912114530												
29121		2935709560												
29122		2937409560												
29124		2912409560												
29125		2912509560												
29126		2912605399												
29126		2915905399												
29131		2913109560												
29136		2913609560												
29137		2913709560												
29142		2914209569												
29158		2915805390												
29159		2915905399												
29160		2916009560												
29162		2916205399												
29302		2930209560												
29498		2949805440												
29498		2949809560												
29510		2951009560												
29554		2955405880												
29554		2955415880												
29582		2958205440												
29582		2958209560												
29626		5214300010												
29688		2968805440												
29747		2974705440												
29747		2974709560												
29782		2978205440												
29835		2983505440												
29835		2983509560												
29969		2996905440												
29984		2998404611												
29984		2998404612												
71932		571932J												

JURID / All rights reserved 2005

JURID by Honeywell

©JURID / All rights reserved 2005

BFMC/WVA/JURID

JURID / All rights reserved 2005

JURID by Honeywell

© JURID / All rights reserved 2005

BFMC1	WVA1	JURID	BFMC2	WVA2
AT/32	15854	**1585409530**		
AX/14/6	19896	**1989603270**		
AX/14/6	19896	**1989609530**		
BC/100/1	19902	**1990201250**	BC/101/1	19903
BC/100/1	19902	**1990204040**	BC/101/1	19903
BC/100/1	19902	**1990209580**	BC/101/1	19903
BC/104/1	19952	**1995203290**	BC/105/1	19953
BC/106/1	19967	**1996703290**	BC/107/1	19968
BC/106/1	19967	**1996709550**	BC/107/1	19968
BC/2/1	17285	**1728505050**		
BC/2/1	17285	**1728595380**		
BC/32/1	17269	**1726905380**	BC/33/1	17270
BC/32/1	17269	**1726909530**	BC/33/1	17270
BC/32/2	17248	**1724805380**		
BC/35/1	19200	**1920004040**		
BC/39/1	17115	**1711504040**		
BC/41/1	19005	**1900545380**		
BC/48/1	17272	**1727205460**		
BC/51/1	11084	**1108401160**		
BC/52/1	15004	**1500405380**		
BC/54/1	19102	**1910204040**		
BC/55/1	19103	**1910304040**		
BC/61/1	19019	**1901905380**		
BC/62/1	15150	**1515005380**	BC/63/1	15174
BC/63/1	15174	**1517405380**		
BC/77/1	17340	**1734005380**		
BC/78/1	17377	**1737704040**		
BC/79/1	19573	**1957304040**		
BC/80/1	19574	**1957401250**		
BC/80/1	19574	**1957404040**		
BC/80/1	19574	**1957409550**		
BC/81/1	19591	**1959194040**		
BC/90/1	19166	**1916604040**	BC/91/1	19167
BC/92/1	19168	**1916804040**	BC/93/1	19169
BC/97/1	19094	**1909401250**		
BC/97/1	19094	**1909404040**		
BC/97/1	19094	**1909409550**		
BC/97/1	19094	**1909409580**		
BC/97/1	19094	**1987901230**		
BC/98/1	19032	**1903201250**		
BC/98/1	19032	**1903204040**		
BC/98/1	19032	**1903209550**		
BC/98/1	19032	**1903209580**		
BC/99/1	19825	**1982509550**		
BO/38/1	15280	**1528009530**	BO/37/1	15281
BO/39/1	17229	**1722909530**	BO/40/1	17230
BT/48/1	15282	**1528203320**		
BT/52/1	17497	**1749705380**	BT/53/1	17498
BT/54/1	17307	**1730703320**	BT/55/1	17308
BT/56/1	17306	**1730603270**	BT/57/1	17309
BT/57/1	17530	**17530**	BT/56/1	17531
BT/59/1	19655	**1965503270**		
BT/59/6	19657	**1965703270**		
BT/59/6	19657	**1965703280**		
BT/59/6	19657	**1965709580**		
BT/76/1	17829	**1782903320**	SA/25/1	17830
BT/76/1	17829	**1782905380**	SA/25/1	17830
BT/76/1	17829	**1782909530**	SA/25/1	17830
BT/84/1	19919	**1991903270**		
BT/84/1	19919	**1991909580**		
BW/1/1	11284	**1128404210**		
BW/1/1	11284	**1128405360**		
BW/6/1	11285	**1128505351**		
CS/63/1	19744	**1974403270**		
CS/64/1	19745	**1974503270**		
CS/64/1	19745	**1974505700**		
CW/11/1	19887	**1988709530**		
CW/12/1	19921	**1992103270**		
CW/3/1	19503	**1950303320**		
CW/3/1	19503	**1950309580**		
CW/4/1	19384	**1938505380**	CW/4/2	19385
CW/4/1	19384	**1938509530**	CW/4/2	19385
CW/4/1	19384	**1938501230**	CW/4/2	19385
CW/4/1	19384	**1938505380**	CW/4/2	19385
CW/4/1	19384	**1938509580**	CW/4/2	19385
DF/10/3	17383	**1738305700**	DF/11/3	17384
DF/15/3	17324	**1732405700**	DF/14/3	17325
DF/16/1	19256	**1925601230**	DF/17/2	19260
DF/16/1	19256	**1925605700**	DF/17/2	19260
DF/16/1	19256	**1925609530**	DF/17/2	19260
DF/16/1	19256	**1925609580**	DF/17/2	19260
DF/20/1	19117	**1911709550**	DF/21/1	19118
DF/20/3	19150	**1915005700**	DF/21/3	19151
DF/20/3	19150	**1915009530**	DF/21/3	19151
DF/22/2	17263	**1726305700**	DF/23/2	17264
DF/30/1	19617	**1961703270**	DF/31/1	19911
DF/30/1	19617	**1961705700**	DF/31/1	19911
DF/32/1	19890	**1989001230**	DF/33/1	19891
DF/32/1	19890	**1989003270**	DF/33/1	19891
DF/32/1	19890	**1989005700**	DF/33/1	19891
DF/32/1	19890	**1989009530**	DF/33/1	19891
DF/34/1	19900	**1990001230**	DF/35/1	19901
DF/34/1	19900	**1990005700**	DF/35/1	19901
DF/34/1	19900	**1990009580**	DF/35/1	19901
DF/36/1	19888	**1988801230**	DF/37/1	19889
DF/36/1	19888	**1988805700**	DF/37/1	19889
DF/36/1	19888	**1988809530**	DF/37/1	19889
DF/40/1	17012	**1701205700**	DF/41/1	17013
DF/42/1	19024	**1902405700**	DF/43/1	19031
DF/45/1	19010	**1901001230**	DF/44/1	19011
DF/45/1	19010	**1901005700**	DF/44/1	19011
DF/45/1	19010	**1901009530**	DF/44/1	19011
DF/46/1	19052	**1905205700**	DF/47/1	19055
DF/46/1	19052	**1905209530**	DF/47/1	19055
DF/48/1	19063	**1906301230**	DF/49/1	19064
DF/48/1	19063	**1906305700**	DF/49/1	19064
DF/48/1	19063	**1906309530**	DF/49/1	19064
DF/50/1	19069	**1906903270**	DF/51/1	19077
DF/50/1	19069	**1906905700**	DF/51/1	19077
DF/83/1	19914	**1991405700**	DF/84/1	19915
DF/83/1	19914	**1991409530**	DF/84/1	19915
DK/17/1	13141	**1314105910**		
DK/31/1	10191	**1019105980**		
DO/80/2	17804	**1780401820**		
DO/86/1	17963	**1796309530**	DO/85/1	17964
DO/87/1	19804	**1980409580**	DO/88/1	19805
FD/121/1	17316	**1731609530**		
FD/85/1	15044	**1504404210**		
FD/86/1	15247	**1524705380**		
FI/101/1	15732	**1573205380**	FI/100/1	15733
FI/104/1	17408	**1740801820**		
FI/104/1	17408	**1740805380**		
FI/105/1	17869	**1786909530**		
FI/106/1	19694	**1969403320**		
FI/106/1	19694	**1969409530**		
FI/108/1	17792	**1779203320**	FI/109/1	17794
FI/109/1	17781	**1778105380**	FI/108/1	17782
FI/113/1	17885	**1788503320**		
FI/113/1	17885	**1788509530**		
FI/115/1	19754	**1975403320**		
FI/115/1	19754	**1975405380**		
FI/118/1	15814	**1581403320**	FI/117	15843
FI/118/1	15814	**1581409530**	FI/117	15843
FI/124/1	19918	**1991803320**		
FI/124/1	19918	**1991809530**		
FI/126/1	17879	**1787903320**	FI/125/1	17880
FI/80/1	15336	**1533603320**		
FI/80/1	15558	**1555803320**		
FI/84/1	15494	**1549409530**		
FI/97/1	17692	**1769209530**		
FI/120/1	17924	**1792403320**	FI/121/1	17925
FI/120/1	17924	**1792409530**	FI/121/1	17925
FI/79/1	15207	**1520709580**		
FI/81/1	17323	**1732303320**		
FI/94/1	17482	**1748203320**		
FT/12/1	19613	**1961301230**	FT/11/1	19614
FT/12/1	19613	**1961304040**	FT/11/1	19614
FT/12/1	19613	**1961309550**	FT/11/1	19614
FT/12/1	19613	**1961309580**	FT/11/1	19614
FT/5/1	19338	**1933803290**		
FT/7/1	19557	**1955701230**	FT/6/1	19606
FT/7/1	19557	**1955704040**	FT/6/1	19606
FT/7/1	19557	**1955709550**	FT/6/1	19606
FT/7/1	19557	**1955709580**	FT/6/1	19606
FT/8/1	19672	**1967203290**	FT/9/1	19673
FU/17/1	19862	**1986203290**	FU/18/1	19863
FU/17/1	19862	**1986209550**	FU/18/1	19863
FU/4/2	19369	**1936904040**	FU/5/2	19370
FU/4/2	19369	**1987901230**	FU/5/2	19370
GG/118/1	17546	**1754609580**		
GG/142/1	19371	**1937129530**		
GG/144/1	17555	**1755503320**		
GG/171/1	15789	**1578909530**		
GG/172	13513	**1351300**		
GG/187/1	17932	**1793209530**	GG/186/1	17933
GG/208/1	19269	**1926903270**	GG/207/1	19272
GG/209/1	15879	**1587905380**		
GG/209/1	15879	**1587909580**		
GG/210/1	17988	**1798805380**		
GG/211/1	19923	**1992305380**		
GG/213/1	19504	**1950405380**		
GG/214/1	19543	**1954301230**	GG/215/1	19552
GG/214/1	19543	**1954309580**	GG/215/1	19552
GG/217/1	17017	**1701709580**		
GG/218/1	19177	**1917701230**		
GG/218/1	19177	**1917709580**		
GG/232/1	19708	**1970803270**		

JURID / All rights reserved 2005

BFMC1	WVA1	JURID	BFMC2	WVA2
GG/235/1	19758	**1975803270**	GG/236/1	19759
GG/70/1	13279	**1327909530**		
GG/83/1	19072	**1907203320**		
GG/83/1	19072	**1907209530**		
GG/92/1	19111	**1911109530**		
GG/95/1	15544	**1554409530**		
GL/11/1	11082	**1108204210**		
HJ/20/1	19449	**1944905380**	HJ/21/1	19450
IL/66/3	19036	**1903601232**	IL/67/3	19037
IL/66/3	19036	**1903604042**	IL/67/3	19037
IL/66/3	19036	**1903609552**	IL/67/3	19037
IL/66/3	19036	**1903609553**	IL/67/3	19037
KM/10/1	17275	**1727505380**		
KM/12/1	17389	**1738903270**		
LF/100/1	19479	**1947903290**	LF/101/1	19480
LF/102/1	19406	**1940603290**	LF/103/1	19407
LF/104/1	19511	**1951103270**	LF/105/1	19512
LH/82/2	19622	**1962203320**		
LH/94/1	17940	**1794009530**		
LZ/2/1	19762	**1976201250**	LZ/3/1	19763
LZ/2/1	19762	**1976203290**	LZ/3/1	19763
LZ/2/1	19762	**1976209550**	LZ/3/1	19763
LZ/5/1	19912	**1991203290**	LZ/4/1	19913
MB/100/1	17973	**1735005460**	MB/101/2	17350
MB/107/1	15869	**1505905460**	MB/108/2	15059
MB/109/2	17278	**1727805380**	MB/109/1	17927
MB/109/2	17278	**1727835380**	MB/109/1	17927
MB/110/2	17280	**1728005380**	MB/110/1	17928
MB/110/2	17280	**1728035380**	MB/110/1	17928
MB/111/2	17290	**1729005380**	MB/111/1	17949
MB/111/2	17290	**1729035380**	MB/111/1	17949
MB/114/2	19506	**1950605380**	MB/113/1	19844
MB/114/2	19506	**1950605450**	MB/113/1	19844
MB/114/2	19506	**1950625380**	MB/113/1	19844
MB/114/2	19506	**1950625450**	MB/113/1	19844
MB/115/2	17287	**1728705380**	MB/115/1	17929
MB/115/2	17287	**1728735380**	MB/115/1	17929
MB/116/2	15162	**1516205380**	MB/116/1	15836
MB/116/2	15162	**1516235380**	MB/116/1	15836
MB/117/1	17975	**1735105460**	MB/118/2	17351
MB/120/1	19078	**1907825380**	MB/121/1	19112
MB/22/1	15215	**1521505380**		
MB/51/1	19160	**1916005050**		
MB/51/1	19160	**1916009530**		
MB/56/1	17259	**1725935380**		
MB/58/3	19466	**1946605450**		
MB/60/1	17276	**1727601820**		
MB/60/1	17276	**1727605050**		
MB/61/1	19125	**1912505450**		
MB/62/1	15300	**1530003320**		
MB/64/1	15057	**1505705380**		
MB/65/1	17105	**1710505380**		
MB/65/1	17105	**1710509530**		
MB/66/1	19182	**1918205380**		
MB/67/1	17297	**1729705380**		
MB/68/1	17298	**1729805380**		
MB/70/1	15349	**1534909530**	MB/69/1	15350
MB/70/1	15349	**1534995460**	MB/69/1	15350
MB/75/1	19579	**1957909580**	MB/74/1	19580

BFMC1	WVA1	JURID	BFMC2	WVA2
MB/75/1	19579	**1970605370**	MB/74/1	19580
MB/75/1	19579	**1970605380**	MB/74/1	19580
MB/75/1	19579	**1970605450**	MB/74/1	19580
MB/77/1	19581	**1958109580**	MB/76/1	19582
MB/77/1	19581	**1970705370**	MB/76/1	19582
MB/77/1	19581	**1970705450**	MB/76/1	19582
MB/80/1	15742	**1503005460**	MB/81/3	15030
MB/83/1	17795	**1779505380**	MB/82/1	17796
MB/85/1	19632	**1963205450**	MB/84/1	19633
MB/88/1	13532	**1302005460**	MB/89/2	13020
MB/90/1	11582	**1101905460**	MB/91/2	11019
MB/93/1	17409	**1740925380**		
MB/93/1	17409	**1740995380**		
MB/94/1	15580	**1558005460**	MB/95/1	15581
MB/94/1	1558020	**1558035460**	MB/95/1	1558021
MF/1/1	17050	**1705005380**	MF/2/1	17051
MF/14/1	19153	**1915303270**	MF/13/1	19154
MF/24/1	17758	**1775803270**		
MF/24/1	17758	**1775805380**		
MF/24/1	17759	**1775903270**		
MP/25/1	19473	**1947305380**	MP/26/1	19747
MP/27/1	1947508	**1947513270**	MP/28/1	1947608
MP/29/1	17682	**1768205380**		
MP/29/1	17682	**1768209530**		
MP/30/2	17238	**1723805050**		
MP/30/2	17238	**1723805380**		
MP/30/2	17238	**1768301230**		
MP/30/2	17238	**1768309530**		
MP/31/2	19494	**1949401230**		
MP/31/2	19494	**1949405050**		
MP/31/2	19494	**1949405370**		
MP/31/2	19494	**1949405380**		
MP/31/2	19494	**1949405450**		
MP/31/2	19494	**1949409530**		
MP/31/2	19494	**1949409580**		
MP/32/2	19495	**1949501230**		
MP/32/2	19495	**1949505050**		
MP/32/2	19495	**1949505380**		
MP/32/2	19495	**1949505450**		
MP/32/2	19495	**1949509530**		
MP/32/2	19495	**1949509580**		
MP/32/2	19495	**1949515390**		
MP/34/1	17410	**1741005380**	MP/35/1	17411
MP/34/1	1741008	**1741015380**	MP/35/1	1741108
MP/36/2	19496	**1949601230**		
MP/36/2	19496	**1949605050**		
MP/36/2	19496	**1949605380**		
MP/36/2	19496	**1949605450**		
MP/36/2	19496	**1949609530**		
MP/36/2	19496	**1949609580**		
MP/36/2	19496	**1949615390**		
MP/37/1	15817	**1581703320**	MP/38/1	15823
MP/37/1	15817	**1581709580**	MP/38/1	15823
MP/39/1	17900	**1790003270**	MP/40/1	17901
MP/39/1	17900	**1790009580**	MP/40/1	17901
NU/6/1	11295	**1129505360**		
OM/12/1	17764	**1776405380**	FI/102/1	17408
OP/20/1	13189	**1318905910**		
PB/11/2	19076	**1907605380**	PB/12/1	19559

BFMC1	WVA1	JURID	BFMC2	WVA2
PB/11/2	19076	**1907605450**	PB/12/1	19559
PB/11/2	19076	**1955809530**	PB/12/1	19559
PB/17/2	19074	**1907405380**	PB/16/1	19850
PB/17/2	19074	**1907405450**	PB/16/1	19850
PB/18/2	19699	**1969905380**	PB/18/1	19847
PB/18/2	19699	**1969905380**	PB/18/1	19847
PB/18/2	19699	**1969905450**	PB/18/1	19847
PB/18/2	19699	**1984709530**	PB/18/1	19847
PB/23/1	17096	**1709603270**	PB/26/1	17099
PB/24/1	19263	**1926305380**	PB/24/2	19343
PB/24/1	19263	**1926309530**	PB/24/2	19343
PB/25/1	19262	**1909903270**	PB/25/2	19342
PB/25/1	19262	**1926205380**	PB/25/2	19342
PB/25/1	19262	**1926209530**	PB/25/2	19342
PB/27/1	19634	**1963405380**	PB/28/1	19365
PB/27/1	19634	**1963405450**	PB/28/1	19365
PB/29/2	19084	**1908405380**	PB/30/1	19856
PB/29/2	19084	**1908405450**	PB/30/1	19856
PB/32/2	19004	**1900405380**	PB/32/1	19743
PB/32/2	19004	**1900405450**	PB/32/1	19743
PB/32/2	19004	**1900435380**	PB/32/1	19743
PB/32/2	19004	**1900435450**	PB/32/1	19743
PB/32/2	19004	**1974309530**	PB/32/1	19743
PB/34/2	19823	**1982303320**	PB/34/1	19786
PB/34/2	19823	**1982305380**	PB/34/1	19786
PB/35/1	19824	**1982403320**		
PB/35/1	19824	**1983805380**	PB/35/2	19838
PB/35/1	19824	**1983809530**	PB/35/2	19838
PB/9/1	17742	**1774205380**	PB/10/1	17743
PD/2/1	17244	**1724405380**		
PD/3/1	19879	**1987901230**	PD/4/1	19881
PD/3/1	19879	**1987909580**	PD/4/1	19881
PD/5/1	17971	**1797105450**	PD/6/1	17972
PD/5/1	17971	**1797109580**	PD/6/1	17972
PD/7/1	19877	**1987709580**	PD/8/1	19878
RN/100/1	19934	**1993401230**		
RN/100/1	19934	**1993403270**		
RN/100/1	19934	**1993403280**		
RN/100/1	19934	**1993409530**		
RN/100/1	19934	**1993409580**		
RN/101/1	19935	**1993501230**		
RN/101/1	19935	**1993503270**		
RN/101/1	19935	**1993503280**		
RN/101/1	19935	**1993509530**		
RN/101/1	19935	**1993509580**		
RN/102/1	19255	**1925503270**	RN/103/1	19259
RN/104/1	19187	**1918701230**		
RN/104/1	19187	**1918703270**		
RN/104/1	19187	**1918703280**		
RN/104/1	19187	**1918709550**		
RN/58/1	15104	**1510403320**	RN/57/1	15107
RW/2/1	19365	**1936501230**	RW/1/1	19366
RW/2/1	19365	**1936504040**	RW/1/1	19366
RW/2/1	19365	**1936509550**	RW/1/1	19366
RW/2/1	19365	**1936509580**	RW/1/1	19366
RW/2/5	19365	**1936504042**	RW/1/5	19366
RW/2/5	19365	**1936509552**	RW/1/5	19366
RW/2/5	19365	**1936509582**	RW/1/5	19366
RW/22/1	19908	**1990801230**	RW/21/1	19909

JURID by Honeywell

© JURID / All rights reserved 2005

BFMC1	WVA1	JURID	BFMC2	WVA2
RW/22/1	19908	**1990803290**	RW/21/1	19909
RW/22/1	19908	**1990809550**	RW/21/1	19909
RW/24/1	19492	**1949209580**		
RW/25/1	19542	**1954209580**		
RW/26/1	19928	**1992809530**		
RW/28/1	19553	**1955301230**	RW/28/2	19554
RW/28/1	19553	**1955309530**	RW/28/2	19554
RW/28/1	19556	**1955603270**	RW/31/1	19714
RW/29/1	19553	**1955303270**	RW/33/1	19716
RW/29/1	19555	**1955509530**	RW/29/2	19556
RW/34/1	19036	**1903609555**	RW/35/1	19037
RW/5/4	19036	**1903601230**	RW/6/4	19037
RW/5/4	19036	**1903604040**	RW/6/4	19037
RW/5/4	19036	**1903609550**	RW/6/4	19037
RW/5/4	19036	**1903609580**	RW/6/4	19037
RW/9/2	19604	**1960401230**	RW/13/2	19605
RW/9/2	19604	**1960403290**	RW/13/2	19605
RW/9/2	19604	**1960409550**	RW/13/2	19605
SA/10/1	19049	**1904903270**	SA/11/1	19199
SA/10/1	19049	**1904903280**	SA/11/1	19199
SA/10/1	19049	**1904904040**	SA/11/1	19199
SA/14/1	15698	**1569803320**		
SA/15/1	13464	**1346403320**	SA/16/1	13465
SA/17/1	17500	**1750003320**	SA/18/1	17506
SA/21/1	15253	**1525303320**	SA/20/1	15254
SA/23/1	19639	**1963903270**		
SA/24/1	17582	**1758203320**	BT/53/1	17805
SA/26/1	17832	**1783203270**		
SA/27/1	17831	**1783103320**	SA/26/1	17832
SA/27/1	17831	**1783105380**	SA/26/1	17832
SA/28/1	17827	**1782703320**	SA/29/1	17828
SA/28/1	17827	**1782705380**	SA/29/1	17828
SA/28/1	17827	**1782709530**	SA/29/1	17828
SA/28/1	17827	**1782909530**	SA/29/1	17828
SA/30/1	19620	**1962003320**	SA/31/1	19621
SA/30/1	19620	**1962005380**	SA/31/1	19621
SA/32/1	19315	**1931503270**	SA/33/1	19319
SA/34/1	19680	**1968003270**		
SA/35/1	19682	**1968200**		
SA/36/1	19760	**1976003290**	SA/37/1	19761
SA/8/1	17247	**1724703320**	SA/9/1	17305
SJ/23/1	19515	**1951504040**	SJ/22/1	19516
SJ/25/1	19517	**1951704040**	SJ/24/1	19518
SJ/26/1	19892	**1989204040**	SJ/27/1	19893
SJ/26/1	19892	**1989209550**	SJ/27/1	19893
SJ/28/1	19283	**1928304040**	SJ/29/1	19284
SJ/28/1	19283	**1928394040**	SJ/29/1	19284
SJ/30/1	19477	**1947703290**	SJ/31/1	19478
SJ/34/1	19490	**1949003290**	SJ/35/1	19491
SJ/36/1	19401	**1940103290**		
SV/26/1	17161	**1716101230**		
SV/26/1	17161	**1716109530**		
SV/26/1	17161	**1716109580**		
SV/27/1	19393	**1939301230**		
SV/27/1	19393	**1939303270**		
SV/27/1	19393	**1939309530**		
SV/27/1	19393	**1939309580**		
SV/34/1	19647	**1964701230**		
SV/34/1	19647	**1964709530**		
SV/34/1	19647	**1964709580**		
SV/39/2	17991	**1799101820**		
SV/40/1	19925	**1992500**		
SV/40/2	19931	**1993101230**		
SV/40/2	19931	**1993101820**		
SV/40/2	19931	**1993105450**		
SV/40/2	19931	**1993109530**		
SV/40/2	19931	**1993109580**		
SV/41/2	19932	**1993201230**		
SV/41/2	19932	**1993201820**		
SV/41/2	19932	**1993209530**		
SV/41/2	19932	**1993209580**		
SV/42/1	19927	**1992709530**		
SV/42/2	19933	**1993301230**		
SV/42/2	19933	**1993305450**		
SV/42/2	19933	**1993309530**		
SV/42/2	19933	**1993309580**		
SV/8/1	19075	**1907501230**		
SV/8/1	19075	**1907501820**		
SV/8/1	19075	**1907509530**		
SV/8/1	19075	**1907509580**		
SY/2/2	15306	**1530605460**		
SY/20/2	17635	**1763503320**	SY/26/1	17636
SY/20/2	17635	**1763509530**	SY/26/1	17636
SY/23/1	19245	**1924505370**		19782
SY/23/1	19245	**1924505450**		19782
SY/24/1	19246	**1924605380**		
SY/24/1	19246	**1924605450**		
SY/31/1	19782	**1978205370**	SY/23/1	19245
SY/31/1	19782	**1978205450**	SY/23/1	19245
SY/34/1	19821	**1982109580**	SY/33/1	19822
SY/7/1	17094	**1709403320**		
SY/8/1	17092	**1709205460**	SY/9/1	17093
TP/1/1	11282	**1128205300**		
UM/24/-	19345	**1934503270**		
UM/26/-	17526	**1752603320**		
VL/71/1	17664	**1766401820**	VL/70/1	17665
VL/71/1	17664	**1766409530**	VL/70/1	17665
VL/73/1	19467	**1946701230**	VL/72/1	19468
VL/73/1	19467	**1946701820**	VL/72/1	19468
VL/73/1	19467	**1946709530**	VL/72/1	19468
VL/73/1	19467	**1946709580**	VL/72/1	19468
VL/74/1	19560	**1956009530**	VL/75/1	19561
VL/76/1	19562	**1956201230**	VL/77/1	19563
VL/76/1	19562	**1956205450**	VL/77/1	19563
VL/76/1	19562	**1956209530**	VL/77/1	19563
VL/82/1	19799	**1979901230**	VL/81/1	19800
VL/82/1	19799	**1979901820**	VL/81/1	19800
VL/82/1	19799	**1979905450**	VL/81/1	19800
VL/82/1	19799	**1979909530**	VL/81/1	19800
VL/82/1	19799	**1979909580**	VL/81/1	19800
VL/83/1	19885	**1988501820**	VL/84/1	19886
VL/83/1	19885	**1988509530**	VL/84/1	19886
VL/85/1	17992	**1799201820**		
VL/86/1	19941	**1994101230**		
VL/86/1	19941	**1994101820**		
VL/86/1	19941	**1994109530**		
VL/86/1	19941	**1994109580**		
VL/87/1	19938	**1993801820**		
VL/87/1	19938	**1993809530**		
VL/87/1	19938	**1993809580**		
VL/87/2	19090	**1909001230**		
VL/87/2	19090	**1993801820**		
VL/87/2	19090	**1993809530**		
VL/87/2	19090	**1993809580**		
VL/88/1	19071	**1907101230**		
VL/88/1	19071	**1993901820**		
VL/88/1	19939	**1993901820**		
VL/88/1	19071	**1993905380**		
VL/88/1	19071	**1993909530**		
VL/88/1	19939	**1993909530**		
VL/88/1	19071	**1993909580**		
VL/88/1	19939	**1993909580**		
VL/88/2	19071	**1907101230**		
VL/88/2	19071	**1993901820**		
VL/88/2	19071	**1993909530**		
VL/88/2	19071	**1993909580**		
VL/89/1	19940	**1994001820**		
VL/89/1	19940	**1994009580**		
VL/89/2	19068	**1906801230**		
VL/89/2	19068	**1994001820**		
VL/89/2	19068	**1994009530**		
VL/89/2	19068	**1994009580**		
VN/14/1	13193	**1351605876**	VN/18/1	13516
VN/19/1	15775	**1577505380**		
VN/7/1	11268	**1126805870**		
YK/7/2	19333	**1933309550**	YK/6/2	19334
YK/9/3	19461	**1946109550**	YK/8/3	19462

B/W/J

JURID / All rights reserved 2005

JURID by Honeywell

JURID / All rights reserved 2005





JURID / All rights reserved 2005

JURID / All rights reserved 2005

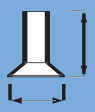



	METAL	FORM	NORM	JURID	SUPASET	
03 x 06 x 5.5 - 180	CO	Semi Tub	Din 7338 B	**8102030002**	**810300J**	
03 x 08 x 5.5 - 180	CO	Semi Tub	Din 7338 B	**8102030012**	**810300J**	for Germany
03 x 10 x 5.5 - 180	CO	Semi Tub	Din 7338 B	**8102030016**	**810300J**	
03 x 12 x 5.5 - 180	CO	Semi Tub	Din 7338 B	**8102030019**	**810300J**	
03.5 x 8 x 6.5 - 180	CO	Semi Tub	Din 7338 B	**8102035004**	**810350J**	
04 x 06 x 7.5 - 180	CO	Tub	Din 7338 C	**8103040001**	**810400J**	
04 x 07 x 7.5 - 180	BR	Semi Tub	Din 7338 B	**8102040001**	**810400J**	
04 x 08 x 7.5 - 180	CO	Semi Tub	Din 7338 B	**8102040007**	**810400J**	for Germany
04 x 08 x 7.5 - 180	ST	Tub	Din 7338 C	**8103040002**	**810400J**	
04 x 10 x 7.5 - 180	CO	Semi Tub	Din 7338 B	**8102040013**	**810400J**	
04 x 10 x 7.5 - 180	BR	Semi Tub	Din 7338 B	**8102040003**	**810400J**	
04 x 12 x 7.5 - 180	CO	Semi Tub	Din 7338 B	**8102040018**	**810400J**	
04 x 12 x 7.5 - 180	ST	Tub	Din 7338 C	**8103040004**	**810400J**	
04 x 15 x 7.5 - 180	CO	Semi Tub	Din 7338 B	**8102040020**	**810400J**	
04.5 x 10 x 8.5 - 180	CO	Semi Tub	Din 7338 B	**8102045004**	**810450J**	for Germany
04.5 x 12 x 8.5 - 180	CO	Semi Tub	Din 7338 B	**8102045006**	**810450J**	
04.76 x 15.88 x 9.32 - 150	BR	Semi Tub	US Norm	**8158044002**	**810476J**	
05 x 06 x 9.5 - 180	CO	Tub	Din 7338 C	**8103050001**	**810500J**	
05 x 08 x 9.5 - 180	CO	Semi Tub	Din 7338 B	**8102050002**	**810500J**	
05 x 08 x 9.5 - 180	ST	Tub	Din 7338 C	**8103050002**	**810500J**	
05 x 10 x 9.5 - 180	CO	Semi Tub	Din 7338 B	**8102050008**	**810500J**	for Germany
05 x 10 x 9.5 - 180	BR	Semi Tub	Din 7338 B	**8102050003**	**810500J**	
05 x 10 x 11 - 180	BR	Semi Tub	Din 7338 B	**8102050004**	**810500J**	
05 x 11 x 9.5 - 180	BR	Semi Tub	Din 7338 B	**8102050005**	**810500J**	
05 x 12 x 9.5 - 180	CO	Semi Tub	Din 7338 B	**8102050014**	**810500J**	
05 x 12 x 9.5 - 180	BR	Semi Tub	Din 7338 B	**8102050006**	**810500J**	
05 x 12 x 11 - 180	BR	Semi Tub	Din 7338 B	**8102050007**	**810500J**	
05 x 13 x 9.5 - 180	BR	Semi Tub	Din 7338 B	**8102050009**	**810500J**	
05 x 13.5 x 11 - 180	BR	Semi Tub	Din 7338 B	**8102050010**	**810500J**	
05 x 14 x 12 - 180	BR	Semi Tub	Din 7338 B	**8102050011**	**810500J**	
05 x 15 x 9.5 - 180	CO	Semi Tub	Din 7338 B	**8102050019**	**810500J**	for Germany
05 x 15 x 11 - 180	BR	Semi Tub	Din 7338 B	**8102050012**	**810500J**	
05 x 15 x 12 - 180	BR	Semi Tub	Din 7338 B	**8102050013**	**810500J**	
05 x 15 x 9,5 - 180	CO	Tub	Din 7338 C	**8103050015**	**810501J**	
05 x 16 x 12 - 180	ST	Tub	Din 7338 C	**8103050014**	**810500J**	
05 x 18 x 12 - 180	BR	Semi Tub	Din 7338 B	**8102050016**	**810500J**	
05 x 20 x 9.5 - 180	CO	Semi Tub	Din 7338 B	**8102050023**	**810500J**	
05 x 20 x 9.5 - 180	BR	Semi Tub	Din 7338 B	**8102050017**	**810500J**	
05.4 x 14.5 x 10.5 - 180	ST	Tub	Din 7338 C	**8103054001**	**810540J**	
06 x 08 x 11.5 - 180	ST	Tub	Din 7338 C	**8103060001**	**810600J**	
06 x 10 x 11.5 - 180	CO	Semi Tub	Din 7338 B	**8102060003**	**810600J**	for Germany
06 x 10 x 11.5 - 180	ST	Tub	Din 7338 C	**8103060002**	**810600J**	
06 x 12 x 11.5 - 180	CO	Semi Tub	Din 7338 B	**8102060007**	**810600J**	for Germany
06 x 12 x 11.5 - 180	ST	Tub	Din 7338 C	**8103060003**	**810600J**	
06 x 13.5 x 11 - 180	BR	Semi Tub	Din 7338 B	**8102060004**	**810601J**	
06 x 13.5 x 12 - 180	BR	Semi Tub	Din 7338 B	**8102060005**	**810602J**	
06 x 14 x 12 - 180	BR	Semi Tub	Din 7338 B	**8102060006**	**810602J**	
06 x 15 x 11.5 - 180	CO	Semi Tub	Din 7338 B	**8102060010**	**810600J**	for Germany
06 x 15 x 11.5 - 180	ST	Tub	Din 7338 C	**8103060007**	**810600J**	
06 x 16 x 12 - 180	ST	Tub	Din 7338 C	**8103060008**	**810602J**	
06 x 18 x 12 - 180	BR	Semi Tub	Din 7338 B	**8102060009**	**810602J**	
06 x 20 x 11 - 180	CO	Semi Tub	Din 7338 B	**8102060014**	**810601J**	
06 x 20 x 11 - 180	BR	Semi Tub	Din 7338 B	**8102060011**	**810601J**	
06 x 25 x 11.5 - 180	CO	Tub	Din 7338 C	**8103060023**	**810601J**	
06 x 25 x 11.5 - 180	ST	Tub	Din 7338 C	**8103060011**	**810601J**	
06 x 30 x 11 - 180	CO	Semi Tub	Din 7338 B	**8102060020**	**810601J**	
06.35 x 12.7 x 11.9 - 150	BR	Semi Tub	US Norm	**8158055001**	**810635J**	
06.35 x 14.29 x 11.9 - 150	BR	Semi Tub	US Norm	**8158056001**	**810635J**	
06.35 x 15.88 x 11.9 - 150	BR	Semi Tub	US Norm	**8158057001**	**810635J**	

JURID / All rights reserved 2005

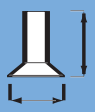



	METAL	FORM	NORM	JURID	SUPASET	
06.35 x 15.88 x 11.9 - 150	ST	Semi Tub	US Norm	**8158057002**	**810635J**	
06.35 x 16 x 11.5 - 180	ST	Tub	Scania	**8130074000**	**810636J**	
06.35 x 17.5 x 11.9 - 150	BR	Semi Tub	US Norm	**8158058001**	**810635J**	
06.35 x 18 x 11.5 - 180	ST	Tub	Scania	**8130074001**	**810636J**	
06.4 x 16 x 12.5 - 120	CO	Semi Tub	Volvo	**8131064001**	**810640J**	
06.4 x 19 x 12.5 - 120	CO	Semi Tub	Volvo	**8131064002**	**810640J**	
07 x 18 x 13 - 180	Steel	Tub	Din 7338 C	**8103070001**		
08 x 12 x 15.5 - 180	ST	Tub	Din 7338 C	**8103080001**	**810800J**	
08 x 14 x 15.5 - 180	ST	Tub	Din 7338 C	**8103080002**	**810800J**	
08 x 15 x 15.5 - 180	CO	Semi Tub	Din 7338 B	**8102080005**	**810800J**	for Germany
08 x 15 x 15.5 - 180	ST	Tub	Din 7338 C	**8103080003**	**810800J**	
08 x 15 x 15.5 - 180	ST	Tub	Mercedes	**8162080001**	**810800J**	
08 x 16 x 15.5 - 180	ST	Semi Tub	Din 7338 B	**8102080028**	**810800J**	
08 x 16 x 15.5 - 180	ST	Tub	Din 7338 C	**8103080004**	**810800J**	
08 x 18 x 15.5 - 180	CO	Semi Tub	Din 7338 B	**8102080010**	**810800J**	for Germany
08 x 18 x 15.5 - 180	ST	Tub	Din 7338 C	**8103080005**	**810800J**	
08 x 18 x 15.5 - 180	ST	Tub	Mercedes	**8162080002**	**810800J**	
08 x 20 x 15.5 - 180	CO	Semi Tub	Din 7338 B	**8102080014**	**810800J**	for Germany
08 x 20 x 15.5 - 180	ST	Tub	Din 7338 C	**8103080007**	**810800J**	
08 x 20 x 15.5 - 180	ST	Tub	Mercedes	**8162080003**	**810800J**	
08 x 22 x 15.5 - 180	CO	Semi Tub	Din 7338 B	**8102080018**	**810800J**	
08 x 22 x 15.5 - 180	ST	Tub	Din 7338 C	**8103080008**	**810800J**	
08 x 22 x 15.5 - 180	ST	Tub	Mercedes	**8162080004**	**810800J**	
08 x 25 x 15.5 - 180	CO	Semi Tub	Din 7338 B	**8102080021**	**810800J**	for Germany
08 x 25 x 15.5 - 180	ST	Tub	Din 7338 C	**8103080009**	**810800J**	
08 x 30 x 15.5 - 180	CO	Semi Tub	Din 7338 B	**8102080024**	**810800J**	for Germany
08 x 30 x 15.5 - 180	ST	Tub	Din 7338 C	**8103080010**	**810800J**	
10 x 16 x 17.5 - 180	CO	Semi Tub	Perrot, Man	**8146100002**	**811001J**	
10 x 18 x 17.5 - 180	CO	Semi Tub	Perrot, Man	**8146100005**	**811001J**	
10 x 18 x 18 - 180	ST	Tub	Din 7338 C	**8103100002**	**811000J**	
10 x 18 x 18.5 - 140	BR	Semi Tub	Man	**8135100003**	**811003J**	
10 x 18 x 15.5 - 180	ST	Tub	Mercedes	**8162100001**	**811002J**	for Germany
10 x 20 x 17.5 - 180	CO	Semi Tub	Perrot, Man	**8146100008**	**811001J**	
10 x 20 x 18 - 180	ST	Tub	Din 7338 C	**8103100003**	**811000J**	
10 x 20 x 18.5 - 140	BR	Semi Tub	Man	**8135100005**	**811003J**	
10 x 22 x 17.5 - 180	CO	Semi Tub	Perrot, Man	**8146100010**	**811001J**	
10 x 22 x 18 - 180	ST	Tub	Din 7338 C	**8103100004**	**811000J**	
10 x 22 x 18.5 - 140	BR	Semi Tub	Man	**8135100007**	**811003J**	
10 x 25 x 17.5 - 180	CO	Semi Tub	Perrot, Man	**8146100012**	**811001J**	
10 x 25 x 18.5 - 140	BR	Semi Tub	Man	**8135100011**	**811003J**	

Jurid	English	Deutsch	Français	Español	Italiano	Nederlands	Portugues
BR	Brass	Messing	Laiton	Latón	Ottone	Messing	Laton Bronze
CO	Copper	Kupfer	Cuivre	Cobre	Rame	Koper	Cobre
ST	Steel	Stahl	Acier	Acero	Acciaio	Staal	Aco
Norm	Norm	Norm	Norme	Reglamento	Norma	Noorjmm	Regulamento
Metal	Material	Werkstoff	Matière	Materia	Materiali	Stoojff	Material
Form	Shape	Form	Forme	Forma	Formi	Faarmj	Figura

JURID / All rights reserved 2005

WVA	JURID	SUPASET
10116		810300J
10191	8103040002	810400J
11019	8102040003	810400J
11025	8102040003	810400J
11082	8103040002	810400J
11084	8103040002	810400J
11107		810300J
11185	8103040002	810400J
11268	8103040002	810400J
11282	8103040002	810400J
11284	8102040003	810400J
11285		810300J
11286	8103040002	810400J
11289	8103040002	810400J
11290	8103040002	810400J
11295		810300J
11498	8103040002	810400J
11534		810300J
11556	8103040002	810400J
11582	8102040003	810400J
13020	8102040003	810400J
13096		810450J
13141	8102040003	810400J
13189	8102040001	810400J
13193	8103040002	810400J
13202	8103040002	810400J
13203	8102040003	810400J
13205	8102050003	810500J
13206	8102050003	810500J
13212	8102040003	810400J
13240	8103040002	810400J
13250	8102040003	810400J
13279	8102040003	810400J
13464	8103040002	810400J
13465	8103040002	810400J
13513	8103040002	810400J
13516	8103040002	810400J
13532	8102040003	810400J
15004	8102040003	810400J
15030	8102050003	810500J
15044	8103060002	810600J
15057	8103080003	810800J
15059	8103060002	810600J
15104	8103040002	810400J
15107	8103040002	810400J
15150	8103060003	810600J
15150	810306003	810600J
15162	8103080001	810800J
15163	8102050013	810500J
15174	8103060003	810600J
15174	810306003	810600J
15192	8103060003	810600J
15193	8103060003	810600J
15207	8103080003	810800J
15215	8103060007	810600J
15247	8162080001	810800J
15253	8102040001	810400J
15254	8102040001	810400J
15256	8103040002	810400J
15280	8158057002	810635J

WVA	JURID	SUPASET
15281	8158057002	810635J
15282	8102050010	810500J
15287	8103060003	810600J
15300	8103060003	810600J
15302	8103060003	810600J
15303	8103060003	810600J
15304	8102050003	810500J
15306	8102050012	810500J
15336	8103080002	810800J
15340	8103060003	810600J
15349	8103060003	810600J
15350	8103060003	810600J
15419	8102050003	810500J
15494	8103080003	810800J
15505	8102040003	810400J
15544	8102040003	810400J
15558	8103080003	810800J
15580	8103060003	810600J
1558020	8103060003	810600J
1558021	8103060003	810600J
15581	8103060003	810600J
15698	8103040002	810400J
15728	8102050003	810500J
15732	8103060003	810600J
15733	8103060003	810600J
15740	8102040003	810400J
15742	8102050003	810500J
15751	8103080003	810800J
15775	8103040002	810400J
15789	8158056001	810635J
15814	8103040002	810400J
15817	8103080007	810800J
15823	8103080007	810800J
15836	8103080001	810800J
15843	8103040002	810400J
15854	8102040003	810400J
15857	8102040003	810400J
15858	8102040003	810400J
15869	8103060002	810600J
15879	8103080003	810800J
17012	8158058001	810635J
17013	8158058001	810635J
17017	8103080003	810800J
17050	8103060003	810600J
17051	8103060003	810600J
17092	8103080003	810800J
17093	8103080003	810800J
17094	8103080003	810800J
17096	8103060003	810600J
17099	8103060003	810600J
17105	8103080003	810800J
17115	8162080002	810800J
17161	8130074001	
17229	8158056001	810635J
17230	8158056001	810635J
17238	8162080002	
17238	8162080002	810800J
17244	8103080003	810800J
17247	8102050010	810500J
17248	8103080003	810800J

WVA	JURID	SUPASET
17259	8103080003	810800J
17263	8158057001	810635J
17264	8158057001	810635J
17269	8103080003	810800J
17270	8103080003	810800J
17272	8103080003	810800J
17275	8103080003	810800J
17276	8103080007	810800J
17278	8162080001	810800J
17280	8162080001	810800J
17285	8103080007	810800J
17287	8162080001	810800J
17290	8162080001	810800J
17297	8103080003	810800J
17298	8103080003	810800J
17305	8102050010	810500J
17306	8103060007	810600J
17307	8102050009	810500J
17308	8102050009	810500J
17309	8103060007	810600J
17316	8158055001	810635J
17323	8103080003	810800J
17324	8158057001	810635J
17325	8158057001	810635J
17339	8103060003	810600J
17340	8103080003	810800J
17350	8103060002	810600J
17351	8103060003	810600J
17377	8162080001	810800J
17383	8158057001	810635J
17384	8158057001	810635J
17389	8146100005	
17408	8103060003	810600J
17409	8103080003	810800J
17410	8135100003	
1741008	8135100003	
17411	8135100003	
1741108	8135100003	
17456	8103080008	810800J
17482	8103080007	810800J
17497	8102050009	810500J
17498	8102050009	810500J
17500	8103054001	810540J
17506	8103054001	810540J
17530	8102050012	810500J
17531	8102050012	810500J
17546	8158056001	810635J
17555	8103060003	810600J
17582	8102050009	810500J
17589	8103060007	810600J
17589	8103080002	810800J
17592	8103060007	810600J
17592	8103080002	810800J
17612	8102060004	
17635	8103060003	810600J
17636	8103060003	810600J
17664	8131064002	
17665	8131064002	
17682	8162080001	810800J
17692	8162080002	810800J

JURID / All rights reserved 2005

WVA	JURID	SUPASET
17739	8162080001	810800J
17742	8103100002	811000J
17743	8103100002	811000J
17744	8102050004	810500J
17758	8103060007	810600J
17759	8103060007	810600J
17760	8103060007	810600J
17764	8103060003	810600J
17781	8103060003	810600J
17782	8103060003	810600J
17792	8102050009	810500J
17794	8102050009	810500J
17795	8162080002	810800J
17796	8162080002	810800J
17797	8103080007	810800J
17804	8102060005	
17805	8102050009	810500J
17807	8103080005	810800J
1780810	8103100002	811000J
1781510	8103100002	811000J
17827	8102050009	810500J
17828	8102050009	810500J
17829	8102050009	810500J
17830	8102050009	810500J
17831	8102050009	810500J
17832	8102050009	810500J
17869	8103080007	810800J
17879	8103060003	810600J
17880	8103060003	810600J
17881	8103060003	810600J
17882	8103060007	810600J
17885	8103080005	810800J
1788830	8162080002	810800J
17897	8103080005	810800J
17898	8103080005	810800J
17900	8103080007	810800J
17901	8103080007	810800J
17905	8103080007	810800J
17906	8103080007	810800J
17915	8162080002	810800J
17924	8103060003	810600J
17925	8103060003	810600J
17927	8162080001	810800J
17928	8162080001	810800J
17929	8162080001	810800J
17932	8103040002	810400J
17933	8103040002	810400J
17938	8103060002	810600J
17949	8162080001	810800J
17950	8162080001	810800J
17953	8102040003	810400J
17963	8103080003	810800J
17964	8103080003	810800J
17971	8103060008	
17972	8103060008	
17973	8103060002	810600J
17975	8103060003	810600J
17988	8103080003	810800J
17991	8130074001	
17992	8158056001	810635J

WVA	JURID	SUPASET
18134	8103060007	810600J
18135	8103060007	810600J
19004	8103100002	811000J
1900429	8103100002	811000J
19005	8162080002	810800J
19010	8158058001	810635J
19011	8158058001	810635J
19019	8146100005	
19024	8158058001	810635J
19031	8158058001	810635J
19032	8162080001	810800J
19036	8103050014	810500J
19036	8158057001	810635J
19036	8158058001	810635J
19037	8103050014	810500J
19037	8158057001	810635J
19037	8158058001	810635J
19049	8102060005	
19052	8158058001	810635J
19055	8158058001	810635J
19063	8158058001	810635J
19064	8158058001	810635J
19069	8158058001	810635J
19072	8158056001	810635J
19074	8103100002	811000J
19075	8130074001	
19076	8103100002	811000J
19077	8158058001	810635J
1907820	8162080001	810800J
19084	8103100002	811000J
19091	8103080005	810800J
19094	8162080001	810800J
19098	8103080005	810800J
19102	8162080001	810800J
19103	8162080001	810800J
19111	8158056001	810635J
1911220	8162080001	810800J
19114	8103100002	811000J
19115	8103100002	811000J
19117	8102050010	810500J
19118	8102050010	810500J
19125	8103080005	810800J
1913310	8103080007	810800J
19150	8158057001	810635J
19151	8158057001	810635J
19153	8103080007	810800J
19154	8103080007	810800J
19160	8103080007	810800J
19166	8103080007	810800J
19167	8103080007	810800J
19168	8103080007	810800J
19169	8103080007	810800J
19170	8146100005	
19177	8103080003	810800J
19182	8103080003	810800J
19187	8103080005	810800J
19199	8102060005	
19200	8162080001	810800J
19235	8162080002	810800J
19236	8158056001	810635J

WVA	JURID	SUPASET
19245	8103100002	811000J
19246	8103100002	811000J
19255	8102050007	810500J
19256	8158057001	810635J
19259	8102050007	810500J
19260	8158057001	810635J
19262	8103080005	810800J
19263	8103080005	810800J
19264	8158057001	810635J
19269	8158056001	810635J
19272	8158056001	810635J
19283	8103080005	810800J
1928390	8103080005	810800J
19284	8103080005	810800J
1928490	8103080005	810800J
19315	8102060004	
19319	8102060004	
19333	8158057002	810635J
19334	8158057002	810635J
19338	8103080007	810800J
19342	8103080005	810800J
19343	8103080005	810800J
19357	8103080007	810800J
19358	8103080007	810800J
19359	8102060009	
19359	8103080007	810800J
19360	8102060009	
19360	8103080007	810800J
19365	8103050014	810500J
19365	8103100002	811000J
19365	8158057001	810635J
19366	8103050014	810500J
19366	8158057001	810635J
19367	8102060009	
19368	8102060009	
19369	8158057001	810635J
19370	8158057001	810635J
19371	8158056001	810635J
19384	8158057001	810635J
19385	8158057001	810635J
19393	8130074001	
19396	8162080001	810800J
19397	8162080001	810800J
19401	8103060007	810600J
19405	8103080003	810800J
19406	8103060008	
19407	8103060008	
19444	8103060007	810600J
19449	8103080007	810800J
19450	8103080007	810800J
19461	8158044002	810476J
19462	8158044002	810476J
19466	8103080005	810800J
19467	8131064002	
19468	8131064002	
19473	8135100003	
1947508	8135100003	
1947608	8135100003	
19477	8103080005	810800J
19478	8103080005	810800J

JURID / All rights reserved 2005

WVA	JURID	SUPASET
19479	8103060008	
19480	8103060008	
19490	8103080005	810800J
19491	8103080005	810800J
19492	8158056001	810635J
19494	8162080001	810800J
19494	816208001	810800J
19495	8162080002	810800J
19495	8162080003	810800J
19496	8162080003	
19496	8162080003	810800J
19503	8103080003	810800J
19504	8103080003	810800J
1950520	8162080001	810800J
19506	8162080001	810800J
1950616	8162080001	810800J
19511	8103060008	
19512	8103060008	
19515	8162080001	810800J
19516	8162080001	810800J
19517	8162080001	810800J
19518	8162080001	810800J
19542	8158056001	810635J
19543	8158056001	810635J
19552	8158056001	810635J
19553	8103080005	810800J
19554	8103080005	810800J
19555	8103080005	810800J
19556	8103080005	810800J
19557	8103050015	810500J
19559	8103100002	811000J
19560	8131064002	
19561	8131064002	
19562	8131064002	
19563	8131064002	
19568	8162080001	810800J
19573	8162080001	810800J
19574	8162080001	810800J
19579	8162080002	810800J
19580	8162080002	810800J
19581	8162080002	810800J
19582	8162080002	810800J
19586	8146100005	
19591	8162080001	810800J
19604	8158057001	810635J
19605	8158057001	810635J
19606	8103050015	810500J
19613	8103050015	810500J
19614	8103050015	810500J
19617	8158057001	810635J
19619	8158056001	810635J
19620	8102050009	810500J
19621	8102050009	810500J
19622	8102060004	
19632	8162080002	810800J
19633	8162080002	810800J
19634	8103100002	811000J
19639	8103080009	810800J
19647	8130074001	
19655	8103080005	810800J

WVA	JURID	SUPASET
19657	8103080005	810800J
19672	8103050014	810500J
19673	8103050014	810500J
19680	8102060005	
19682	8102060005	
19687	8146100005	
19690	8146100005	
19694	8103080007	810800J
19699	8103100002	811000J
19706	8103080005	810800J
19706	8103080007	810800J
19706	8158057001	810635J
19706	8162080002	810800J
19707	8162080002	810800J
19708	8103080003	810800J
19714	8103080005	810800J
19715	8103080005	810800J
19715	8158057001	810635J
19716	8103080005	810800J
19717	8103080005	810800J
19717	8158056001	810635J
19717	8158057001	810635J
19718	8103050015	810500J
19719	8103050015	810500J
19723	8162100001	
19743	8103100002	811000J
1974329	8103100002	811000J
19744	8158056001	810635J
19745	8158056001	810635J
19747	8135100003	
19754	8103100003	811000J
19755	8103080005	810800J
19755	8103100002	811000J
1975529	8103100002	811000J
19758	8158055001	810635J
19759	8158055001	810635J
19760	8103080005	810800J
19761	8103080005	810800J
19762	8103080005	810800J
19763	8103080005	810800J
19766	8103080007	810800J
19779	8103080007	810800J
19782	8103100002	811000J
19786	8103100002	811000J
19799	8158057002	810635J
19800	8158057002	810635J
19801	8103080008	810800J
19802	8103080008	810800J
19804	8103080003	810800J
19805	8103080003	810800J
19808	8103080003	810800J
19809	8103080003	810800J
19821	8103060007	810600J
19822	8103060007	810600J
19823	8103100002	811000J
19824	8103100002	811000J
19825	8103080005	810800J
19838	8103100002	811000J
19844	8162080001	810800J
1984416	8162080001	810800J

WVA	JURID	SUPASET
19845	8162080001	810800J
1984516	8162080001	810800J
19847	8103100002	811000J
19848	8103100002	811000J
19850	8103100002	811000J
19856	8103100002	811000J
19858	8103060007	810600J
19859	8103060007	810600J
19862	8103050014	810500J
19863	8103050014	810500J
19877	8103060007	810600J
19878	8103060007	810600J
19879	8103060007	810600J
19881	8103060007	810600J
19885	8131064002	
19886	8131064002	
19887	8158055001	810635J
19888	8158057001	810635J
19889	8158057001	810635J
19890	8158057001	810635J
19891	8158057001	810635J
19892	8162080002	810800J
19893	8162080002	810800J
19896	8158056001	810635J
19900	8158057001	810635J
19901	8158057001	810635J
19902	8162080001	810800J
19903	8162080001	810800J
19908	8158057001	810635J
19909	8158057001	810635J
19911	8158057001	810635J
19912	8162080002	810800J
19913	8162080002	810800J
19914	8158057001	810635J
19915	8158057001	810635J
19918	8103080003	810800J
19919	8103080005	810800J
19921	8158055001	810635J
19923	8158055001	810635J
19925	8130074001	
19927	8130074001	
19928	8158056001	810635J
19931	8130074001	
19932	8130074001	
19933	8130074001	
19934	8103080005	810800J
19935	8103080005	810800J
19938	8158056001	810635J
19939	8158056001	810635J
19940	8158056001	810635J
19941	8158056001	810635J
19946	8103100002	811000J
19947	8103100002	811000J
19952	8162080001	810800J
19953	8162080001	810800J
19967	8102050013	810500J
19968	8102050013	810500J

JURID / All rights reserved 2005

JURID / All rights reserved 2005

WHEEL COMBINATIONS

(S) Steering Wheel (D) Driving Wheel (T) Trailing Wheel

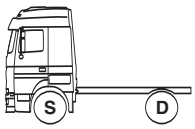

4 x 2 rigid

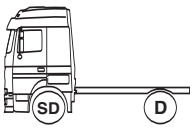

4 x 4 rigid

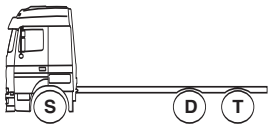

6 x 2 rigid

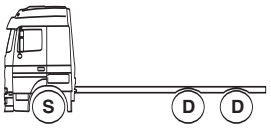

6 x 4 rigid

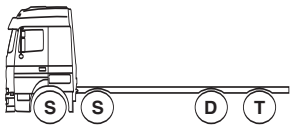

8 x 2 rigid

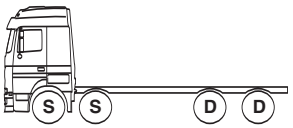

8 x 4 rigid
twin steer

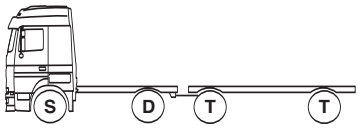

4 x 2 rigid
2 axle drawbar trailer

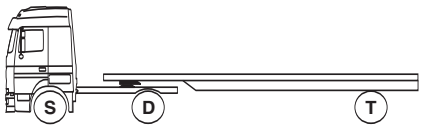

4 x 2 tractor unit
single axle articulated trailer

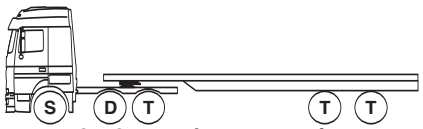

6 x 2 tag axle tractor unit
tandem / 2 axle articulated trailer

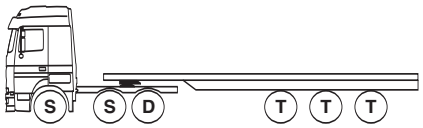

6 x 2 twin steer tractor unit
tri / 3 axle articulated trailer

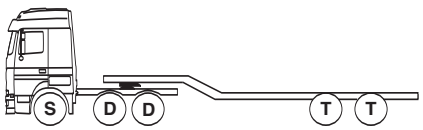

6 x 4 trator unit
tandem / 2 axle
low loader / step frame trailer

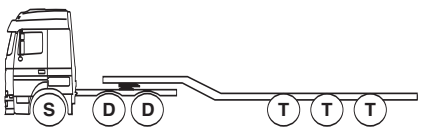

6 x 4 trator unit
tandem / 3 axle
low loader / step frame trailer

JURID by Honeywell

© JURID / All rights reserved 2005

JURID®
by Honeywell

- Manufacturers can alter the characteristics of their products without prior notice. In spite of the care taken in preparing this document there could be errors.
  Do not interchange based on appearance, many products which look identical, have different technical specifications.
  We disclaim responsibility in case of any incorrect use. Consult our Engineering service if required.
  Information on cross references and manufacturers is given for comparison purposes only.
  Bendix JURID does not accept liability in case of error or change, since the printing of this catalogue.
  This catalogue is produced by Bendix JURID. All reproduction in whole, or in part is forbidden.

- Hersteller können die Eigenschaften ihrer Produkte ohne vorherige Ankündigung ändern. Trotz der Sorgfalt, mit der das vorliegende Dokument erstellt wurde, sind Fehler möglich.
  Tauschen Sie nichts auf der Grundlage des Aussehens aus; viele Produkte,die gleich aussehen zeigen unterschiedliche technische Spezifikationen auf .
  Im Falle jeglicher fehlerhafter Anwendung, entziehen wir uns der Haftungspflicht, sowie aller weiterer Verantwortungen.
  Ziehen Sie im Bedarfsfall unseren technischen Dienst zu Rate.
  Querverweise und Angaben über Hersteller sollen nur zum Vergleich dienen.
  Bendix JURID haftet nicht für Fehler oder Änderungen, die seit der Drucklegung dieses Kataloges vorge nommen wurden.
  Dieser Katalog wurde von Bendix JURID erstellt. Die Reproduktion desselben ,sowie auch nur auszugsweise ist verboten.

- Les constructeurs peuvent modifier les caractéristiques de leurs produits sans préavis. Malgré tout le soin apporté à la préparation de ce document, des erreurs peuvent y figurer.
  Nous attirons votre attention sur le fait que bien que certaines de nos pièces puissent paraître visuellement interchangeables, elles ont en fait des caractéristiques techniques différentes.
  Nous dégageons notre responsabilité en cas d'usage non conforme.
  Prière de consulter notre service technique si nécessaire.
  Les informations fournies sur les références croisées et les constructeurs n'ont qu'un but de comparaison.
  Bendix JURID dégage sa responsabilité en cas d'erreurs ou de changements postérieurs à l'impression de ce catalogue.
  Toute reproduction totale ou partielle de ce catalogue publié par Bendix JURID est interdite.

- Los constructores podrán alterar las características de sus productos sin previo aviso. Por tanto, a pesar del cuidado con que se ha redactado este documento, podrían producirse errores o diferencias.
  No deben colocarse recambios simplemente por la apariencia. Muchos productos que parecen idénticos podrían tener diferentes características técnicas.
  Rechazamos toda responsabilidad en el caso de uso incorrecto.
  Sírvanse consultar con nuestro servicio técnico si es necesario.
  La información sobre cruczes de referencias y fabricantes se incluye únicamente a efectos comparativos.
  Bendix JURID no se responsabiliza en caso de errores o modificaciones surgidos después de la impresión de este catálogo.
  Este catálogo ha sido realizado y producido por Bendix JURID. Se prohibe su reproducción total o parcial.

- I costruttori possono variare le caratteristiche dei loro prodotti senza obbligo di preavviso.
  Nonostante la massima cura adottata nella preparazione di questo catalogo non si esclude la possibilità di errori.
  Non si deve mai presumere l'intercambiabilità in base all'aspetto fisico: molti prodotti di aspetto identico hanno caratteristiche tecniche diverse.
  Si declina ogni responsabilità per danni o lesioni risultanti in conseguenza di uso improprio.
  In caso di dubbi rivolgersi sempre al servizio tecnico.
  I richiami ed i riferimenti a prodotti e costruttori hanno esclusivo valore indicativo.
  La Bendix JURID declina ogni responsabilità per errori o variazioni a partire dalla data di stampa del presente catalogo.
  Questo catalogo è realizzato da Bendix JURID. La riproduzione totale o parziale è assolutamente proibita.

- Fabrikanten kunnen de eigenschappen van hun produkten zonder voorafgaande kennisgeving wijzigen.
  Alhoewel aan de voorbereiding van dit document de grootste zorg is besteed, zou het fouten kunnen bevatten.
  Bij het vervangen van onderdelen moet men niet op het uiterlijk afgaan - vele produkten die er hetzelfde uitzien, hebben andere technische specificaties.
  Wij aanvaarden geen verantwoordelijkheid voor onjuist gebruik.
  Raadpleeg zonodig onze Engineering Service.
  Eventuele verwijzingen en namen van fabrikanten worden alléén verstrekt als vergelijkingsmateriaal.
  Bendix JURID aanvaardt geen verantwoordelijkheid voor begane fouten of aangebrachte wijzigingen sinds deze catalogus is gedrukt.
  Deze catalogus werd geproduceerd door Bendix JURID. Gehele of gedeeltelijke verveelvoudiging is verboden.

Création et Réalisation epheme +33 3 44 63 46 58

Honeywell Aftermarket Europe S.A.
21, avenue Saint-Mathurin
Zone Industrielle d'Allonne
60006 Beauvais
France
Tel +33 3 44 12 32 33
Fax +33 3 44 02 14 95

Honeywell Aftermarket Europe GmbH.
Postfach 11 21
Am Ochsenwald
66511 Neunkirchen
Germany
Tel +49 6821 404 0
Fax +49 6821 404 238

Honeywell Aftermarket Europe S.pa
Via Romagna, 23
10071 Borgaro (TO)
Italy
Tel +39 011 45 10 711
Fax +39 011 47 01 123

Honeywell Servicos Ind. e Commerciais Portugal Lda
Centro Empresarial Granja Park - Loja 1
Recta de Granja - Campo Raso
2710 Sintra
Portugal
Tel +35 121910 6560
Fax +35 121910 6569

Honeywell Aftermarket Europe S.A.
Carretera. C-17kms. 17,6
08400 Granollers
Spain
Tel +34 93 842 5600
Fax +34 93 842 5674

Honeywell Aftermarket Europe Ltd
Lawnhurst Trading Estate
Oakhurst Drive, off Birdhall Lane
Cheadle Heath - Cheshire SK3 ORZ
UK
Tel +44 7970 111310

Head Office
Honeywell Aftermarket Europe S.A.
Port Autonome de Gennevilliers
12, Route Ouest du Mole N°1
92631 Gennevilliers
France

www.honeywell.com

DC225698521458547
01/2005
© 2005 Honeywell International Inc.

JURID®
by Honeywell